world wide complements (europe)

price & application guide

10.23.2023

teknion

update summary

Please be advised that information has been updated within the World Wide Complements (Europe) Price & Application Guide. To highlight these updates, a summary has been created for your reference.

deleted

Navigate has been removed from the World Wide Complements (Europe).

The following products have been deleted:

- Navigate World Wide Height-Adjustable Freestanding Table Base Only (YW2)
- Rectangular Height-Adjustable Worksurface for Navigate World Wide (WY2)

Please note, first orders for new products will be accepted on October 23, 2023. All software will also be updated by October 23, 2023. If you have any questions regarding the information enclosed, please contact your Teknion Customer Service Representative.

WHAT IS WORLD WIDE COMPLEMENTS 7

INDEX 14

WORLD WIDE HISPACE 19

understanding hispace height-adjustable bench & table

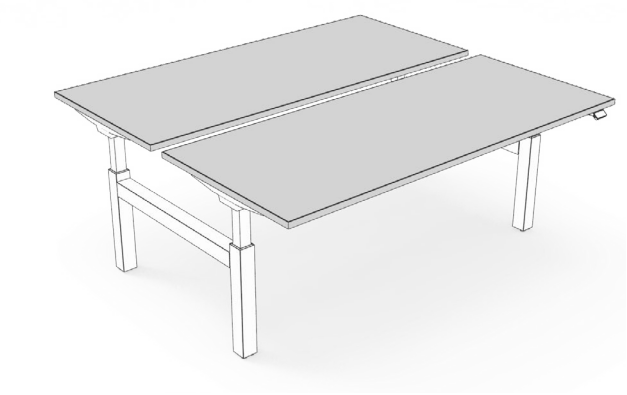

double-sided bench

- Double-sided frames
- Option of one base mechanism:
  - Extended Range Electric
- Two worksurface styles:
  - Rectangular with Square Corners
  - Rectangular with Radius Corners
- Worksurface finishes available:
  - Source Laminate
  - Foundation Laminate
- Cable Management option available
- Optional Screens
  - Spine Screens
  - Desk Edge Screens
  - End of Run Screens

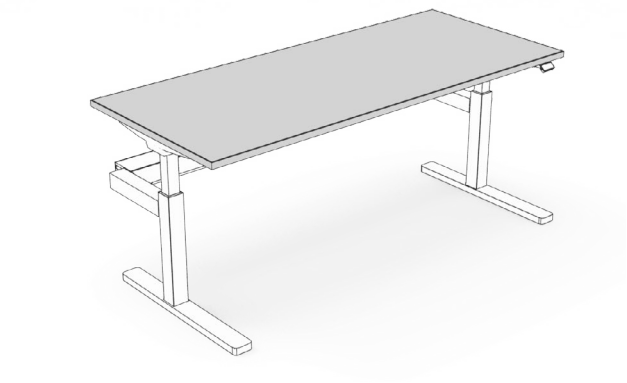

single-sided bench

- Single-Sided Frames
- Option of one base mechanism:
  - Extended Range Electric
- Two worksurface styles:
  - Rectangular with Square Corners
  - Rectangular with Radius Corners
- Worksurface finishes available:
  - Foundation Laminate
  - Seamless
- Cable Management option available
- Optional Screens
  - Corridor Screens

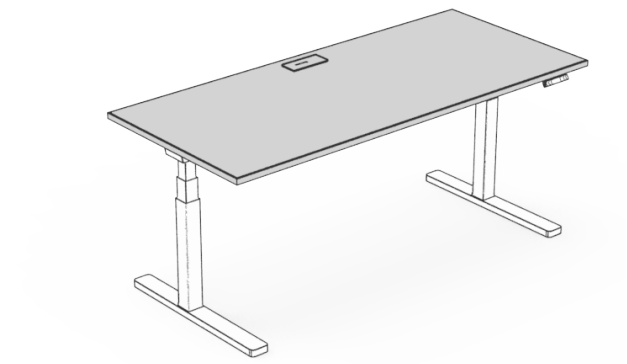

height-adjustable table

- Option of one base mechanism:
  - Extended Range Electric
- Two worksurface styles:
  - Rectangular with Square Corners
  - Rectangular with Radius Corner
- Worksurface finishes available:
  - Foundation Laminate
- Cable Management option available
- Optional Screens
  - Desk Edge Screens

double-sided height-adjustable bench typicals

The following typicals demonstrate the versatility of the Double, Single-Sided Height-Adjustable Bench and Height-Adjustable Tables.

double-sided height-adjustable bench 01

double-sided height-adjustable bench 02

single-sided height-adjustable bench typicals

single-sided height-adjustable bench 01

single-sided height-adjustable bench 02

height-adjustable table typicals

height-adjustable table 01

height-adjustable table 02

introduction

where to find the information you need

Teknion provides an array of tools and information resources to help you get things done simply and easily. From product pricing to application guidelines to online planning suggestions, you will find what you need when you need it.

guide contents

This guide contains all the information you need to order this product through your specification software. The Introduction section provides everything you need to get started, including an index for product reference. The Application Guide section contains detailed specification guidelines, application and planning information to help you plan your project correctly. The Price Guide sections provide detailed pricing and specification information by product type. Available online at www.teknion.com.

where to find the information you need

All Teknion marketing materials are available online at www.teknion.com, including:

price & product guide

application guide

planning tool

installation guides

fabrics & finishes

product photography & drawings

weights & volumes

order forms

warranty/terms & conditions of sale

xpress program guide

teknion forms

The following forms are available online at www.teknion.com, to help you specify and place your order if required:

teknipaint

If you require a custom paint color match, you must submit a TekniPaint form.

using your own material (COM)

If you wish to use your own material on fabric-covered products, you must submit a completed COM form including a sample upholstery and safety testing. A COM Order Information Sheet must also be submitted. This form captures all relevant ordering and tracking information. A COM Request for Yardage Calculation form may be sent to Teknion for preliminary yardage requirements.

placing a manual order

Complete an Order Cover Sheet with the information we need to fill your order. This is the most important step. If the Order Cover Sheet is not complete and correct, the order may be delayed.

key requirements

If you require that certain pieces share the same locks you will need to specify Set of Keys Alike (SOKL) located in the Price and Product Guide.

user feedback

How is our marketing material working for you?

Feedback from the user is very important to the quality of Teknion's marketing material. We ask that if you have suggestions on how you think we could improve content OR if you have found an error, that you contact your Teknion Technical Services department.

index

Section Contents	Product Code	Page No.
WHAT IS WORLD WIDE COMPLEMENTS		
Understanding hiSpace Height-Adjustable Bench & Table		7
Double-Sided Height-Adjustable Bench Typicals		8
Single-Sided Height-Adjustable Bench Typicals		9
Height-Adjustable Table Typicals		10
WORLD WIDE HISPACE		
APPLICATION GUIDE		
Understanding Application Guide Pages		23
Collision Detection		24
Double & Single-Sided Frame Overview		25
Double & Single-Sided Frame Basics		28
Planning with Double & Single-Sided Frames		29
Single-Sided Frame Weldment Cover Basics		32
Planning with Single-Sided Frame Weldment Covers		33
Double & Single-Sided Base Link Basics		34
Planning with Double-Sided Base Links		35
Planning with Single-Sided Base Links		37
Double & Single-Sided Spine Tray Basics		39
Planning with Double-Sided Spine Trays		40
Planning with Single-Sided Spine Trays		41
Universal Spine Tray Cover Basics		44
Planning with Universal Spine Tray Covers		45
Double & Single-Sided Rectangular Worksurface Basics		46
Planning with Double & Single-Sided Rectangular Worksurfaces		48
Planning with 120 Worksurfaces		51
Under Worksurface Cable Tray Basics		52
Planning with Under Worksurface Cable Tray		53
Power Bar Holder for Spine Tray Basics		55
Double & Single-Sided Cable Riser Basics		56
Planning with Double-Sided Cable Riser		57
Planning with Single-Sided Cable Riser – mid		58
Planning with Single-Sided Cable Riser – end		58
End Gable Basics		61
Planning with End Gables		62
Vertical Wire Carrier Basics		63
Planning with Vertical Wire Carrier		64
Vertical Wire Carrier Bracket and Cover Basics		65
Felt Cable Cover Organizer Basics		66
Wire Bridge Basics		67
Wire Cover Basics		68
Planning with Wire Covers		69
Double-Sided Screens Overview		71
Double-Sided Spine Screen Basics		72
Planning with Double-Sided Spine Screens		73
Double-Sided Desk Edge Screen Basics		74
Planning with Double-Sided Desk Edge Screens		75
Double-Sided End of Run Screen Basics		76
Planning with Double-Sided End of Run Screens		77
Single-Sided Corridor Screen Basics		78
Planning with Single-Sided Corridor Screens		79
Height-Adjustable Table Frame Overview		80
Height-Adjustable Table Frame Basics		81
Planning with Height-Adjustable Table Frames		82
Height-Adjustable Table Worksurface Basics		84
Planning with Height-Adjustable Table Worksurfaces		85
Under Worksurface Cable Tray for Tables Basics		86
Planning with Under Worksurface Cable Trays for Tables		87
Vertical Wire Carrier for Tables Basics		88
Felt Cable Cover Organizer for Tables Basics		89
Modesty Panel Basics		90
Planning with Modesty Panels		91
Desk Edge Screen Basics		92
Planning with Desk Edge Screens		93
Planning with Radius Corner Desk Edge Screen for Freestanding Tables		94
Bag Drop Basics		95
Bag Drop Finishes		96
Hanging Whiteboard Basics		97
DOUBLE-SIDED HEIGHT-ADJUSTABLE BENCH		
Double-Sided Frame	EHWBFYD	106
Double-Sided Base Link	EHWBFBD	107
Double-Sided Spine Tray – Low Capacity	EHWBFTL	108
Double-Sided Spine Tray – Medium Capacity	EHWBFTM	109
Double-Sided Spine Tray – High Capacity	EHWBFTH	110
Double-Sided Rectangular Worksurface with Square Corners	EHWBWBD	112
Double-Sided Rectangular Worksurface with Radius Corners	EHWBWJD	114
Double-Sided Desk Edge Screen – Infinity	EHWBCDX	116
Double-Sided Spine Screen – Beveled Fabric	EHWBCTC	117
Double-Sided Spine Screen – Solid	EHWBCTS	118
Double-Sided Spine Screen – Framed Fabric	EHWBCTF	119
Double-Sided Cable Riser	EHWBECD	120
Double-Sided End of Run Screen – Beveled Fabric	EHWBTWC	121
Double-Sided End of Run Screen – Solid	EHWBTWS	122
Double-Sided End of Run Screen – Framed Fabric	EHWBTWF	123
SINGLE-SIDED HEIGHT-ADJUSTABLE BENCH		
Single-Sided Frame	EHWBFYS	128
Single-Sided Frame Weldment Cover	EHWBFSC	129
Single-Sided Base Link	EHWBFBS	130
Single-Sided Spine Tray – Low Capacity	EHWBFSL	131
Single-Sided Spine Tray – Medium Capacity	EHWBFSM	132
Single-Sided Spine Tray – High Capacity	EHWBFSH	133
Single-Sided Rectangular Worksurface with Square Corners	EHWBWBS	134
Single-Sided Rectangular Worksurface with Radius Corners	EHWBWJS	136

index

Section Contents	Product Code	Page No.
Single-Sided Cable Riser – End	EHWBECE	138
Single-Sided Cable Riser – Mid	EHWBECM	139
Single-Sided Corridor Screen – Beveled Fabric	EHWBLSC	140
Single-Sided Corridor Floor Screen – Beveled Fabric	EHWBLSCF	141
Single-Sided Corridor Screen – Framed Fabric	EHWBLSF	142
Single-Sided Corridor Floor Screen – Framed Fabric	EHWBLSFF	143
Single-Sided Corridor Screen – Solid	EHWBLSS	144
Single-Sided Corridor Floor Screen – Solid	EHWBLSSF	145
Single-Sided Leveler Extension Blocks	EHWBFWK	146
Single-Sided Corridor Screen Alignment Clip - Solid	EHWBLBS	147
120 HEIGHT-ADJUSTABLE BENCH		
120 Frame	EHWBFYT	151
120 Worksurface with Square Corners	EHWBWBT	152
120 Worksurface with Radius Corners	EHWBWJT	154
3-Way 120 Screen Aligner	EHWBCAT	156
120 Cable Riser - Mid	EHWBECMT	157
120 Wire Bridge	EHWBEWT	158
UNIVERSAL COMPONENTS		
Universal Spine Tray Cover	EHWBFTV	162
Wire Cover	EHWBEWV	163
Wire Bridge	EHWBEWB	164
Under Worksurface Cable Tray	EHWBEUY	165
Vertical Wire Carrier	EHWBEEE	166
Vertical Wire Carrier Bracket & Cover	EHWBEEB	167
Felt Cover Cable Organizer	EHWBEWY	168
Power Bar Holder for Spine Trays	EHWBETP	169
End Gable	EHWBCGE	170
Hanging Whiteboard	EHWBAWW	171
Bag Drop	EHWBAWR	172
Workstation Name Plate	EHWBANP	173
hiSpace Spine Tray End Cover	EHWBFTC	174
hiSpace Smooth Felt Lateral Screen	EHWBCLZ	175
HEIGHT-ADJUSTABLE TABLES		
hiSpace World Wide Height-Adjustable Freestanding – Base Only	EYWYR	179
hiSpace World Wide Rectangular Worksurface	EYWWB	180
hiSpace World Wide Rectangular Worksurface with Radius Corners	EYWWJ	182
hiSpace Basic 120 Height-Adjustable Freestanding Table – Base Only	EYNS	184
hiSpace Freestanding 120 Worksurface with Square Corners	EYWBWBT	186
hiSpace Freestanding 120 Worksurface with Radius Corners	EYWBWJT	188
Under Worksurface Cable Tray for Freestanding Height-Adjustable Table	EYWUY	190
Vertical Wire Carrier for Freestanding hiSpace World Wide	EYWEE	191
Infinity Curved Desk Edge Screen for Freestanding Height-Adjustable Table	EYWXC	192
Infinity Desk Edge Screen for Freestanding Height-Adjustable Table	EYWXD	193
Desk Edge Screen – Framed Fabric	EYWFD	194
Modesty Panel for Freestanding Height-Adjustable Table – Solid	EYWMS	195
Modesty Panel for Freestanding Height-Adjustable Table – Smooth Felt	EYWMF	196

world wide hispace

world wide hispace

HISPACE APPLICATION GUIDE 19

HISPACE PRICE & PRODUCT GUIDE 101

hispace
application guide

hispace application guide

UNDERSTANDING APPLICATION GUIDE PAGES 23
COLLISION DETECTION 24
DOUBLE & SINGLE-SIDED FRAME OVERVIEW 25
DOUBLE & SINGLE-SIDED FRAME BASICS 28
PLANNING WITH DOUBLE & SINGLE-SIDED FRAMES 29
SINGLE-SIDED FRAME WELDMENT COVER BASICS 32
PLANNING WITH SINGLE-SIDED FRAME WELDMENT COVERS 33
DOUBLE & SINGLE-SIDED BASE LINK BASICS 34
PLANNING WITH DOUBLE SIDED BASE LINKS. 35
PLANNING WITH SINGLE-SIDED BASE LINKS 37
DOUBLE & SINGLE-SIDED SPINE TRAY BASICS 39
PLANNING WITH DOUBLE-SIDED SPINE TRAYS 40
PLANNING WITH SINGLE-SIDED SPINE TRAYS 41
UNIVERSAL SPINE TRAY COVER BASICS 44
PLANNING WITH UNIVERSAL SPINE TRAY COVERS. 45
DOUBLE & SINGLE-SIDED RECTANGULAR WORKSURFACE BASICS .46
PLANNING WITH DOUBLE & SINGLE-SIDED RECTANGULAR WORKSURFACES 48
UNDER WORKSURFACE CABLE TRAY BASICS. 52
PLANNING WITH UNDER WORKSURFACE CABLE TRAYS 53
POWER BAR HOLDER FOR SPINE TRAY BASICS 55
CABLE RISER BASICS. 56
PLANNING WITH DOUBLE-SIDED CABLE RISER 57
PLANNING WITH SINGLE-SIDED CABLE RISER – MID 58
PLANNING WITH SINGLE-SIDED CABLE RISER – END 58
END GABLE BASICS. 61
PLANNING WITH END GABLES 62
VERTICAL WIRE CARRIER BASICS 63
PLANNING WITH VERTICAL WIRE CARRIER 64
VERTICAL WIRE CARRIER BRACKET & COVER BASICS. 65
FELT CABLE COVER ORGANIZER BASICS. 66

CONTINUED ON NEXT PAGE

hispace application guide

WIRE BRIDGE BASICS 67
WIRE COVER BASICS 68
PLANNING WITH WIRE COVERS 69
DOUBLE-SIDED SCREENS OVERVIEW 71
DOUBLE-SIDED SPINE SCREEN BASICS 72
PLANNING WITH DOUBLE-SIDED SPINE SCREENS 73
DOUBLE-SIDED DESK EDGE SCREEN BASICS 74
PLANNING WITH DOUBLE-SIDED DESK EDGE SCREENS 75
DOUBLE-SIDED END OF RUN SCREEN BASICS 76
PLANNING WITH DOUBLE-SIDED END OF RUN SCREENS 77
SINGLE-SIDED CORRIDOR SCREEN BASICS 78
PLANNING WITH SINGLE-SIDED CORRIDOR SCREENS 79
HEIGHT-ADJUSTABLE TABLE FRAME OVERVIEW 80
HEIGHT-ADJUSTABLE TABLE FRAME BASICS 81
PLANNING WITH HEIGHT-ADJUSTABLE TABLE FRAMES 82
HEIGHT-ADJUSTABLE TABLE WORKSURFACE BASICS 84
PLANNING WITH HEIGHT-ADJUSTABLE TABLE WORKSURFACES . . . 85
UNDER WORKSURFACE CABLE TRAY FOR TABLES BASICS 86
PLANNING WITH UNDER WORKSURFACE CABLE TRAYS FOR TABLES 87
VERTICAL WIRE CARRIER FOR TABLES BASICS 88
FELT CABLE COVER ORGANIZER FOR TABLES BASICS 88
MODESTY PANEL BASICS 90
PLANNING WITH MODESTY PANELS 91
DESK EDGE SCREENS BASICS 92
PLANNING WITH DESK EDGE SCREENS 93
PLANNING WITH RADIUS CORNER DESK EDGE SCREEN FOR FREESTANDING TABLES 94
BAG DROP BASICS 95
BAG DROP FINISHES 96
HANGING WHITEBOARD BASICS 97

understanding application guide pages

This application guide will include the following types of pages.

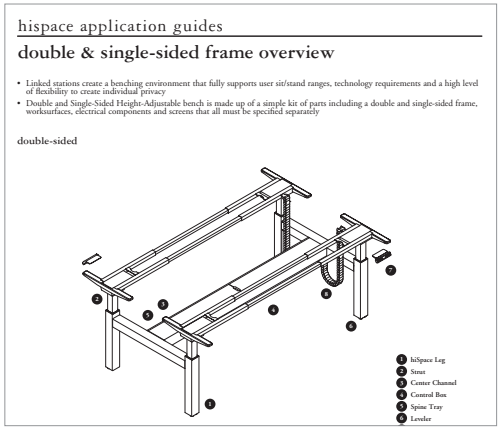
hispace application guides

double & single-sided frame overview

- Linked stations create a benching environment that fully supports user sit/stand ranges, technology requirements and a high level of flexibility to create individual privacy
- Double and Single-Sided Height-Adjustable bench is made up of a simple kit of parts including a double and single-sided frame, worksurfaces, electrical components and screens that all must be specified separately

double-sided

1 InSpace Leg
2 Strut
3 Center Channel
4 Control Box
5 Spine Tray
6 Leveler

overview pages

Used to describe the intent and common features of a group of products.

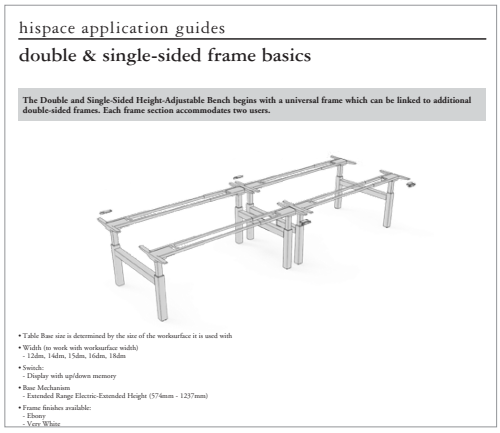
hispace application guides

double & single-sided frame basics

The Double and Single-Sided Height-Adjustable Bench begins with a universal frame which can be linked to additional double-sided frames. Each frame section accommodates two users.

- Table Base size is determined by the size of the worksurface it is used with
- Width (to work with worksurface width)
  - 12dm, 14dm, 15dm, 16dm, 18dm
- Switch:
  - Display with up/down memory
- Base Mechanism
  - Extended Range Electric-Extended Height (574mm - 1237mm)
- Frame finishes available:
  - Ebony
  - Very White

basics pages

Used to describe the details of each individual product including:
- Product codes
- Dimensions
- Options
- Features
- Links to the price page

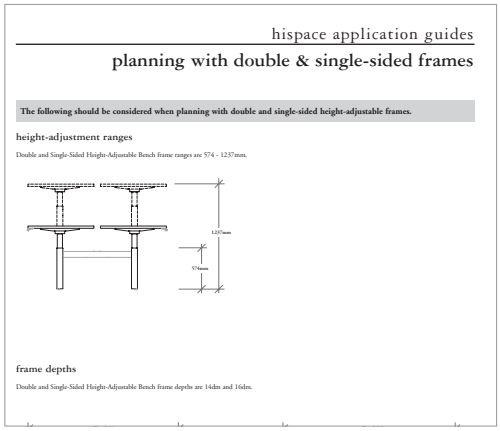
hispace application guides

planning with double & single-sided frames

The following should be considered when planning with double and single-sided height-adjustable frames.

height-adjustment ranges

Double and Single-Sided Height-Adjustable Bench frame ranges are 574 - 1237mm.

1237mm
574mm

frame depths

Double and Single-Sided Height-Adjustable Bench frame depths are 14dm and 16dm.

planning pages

Used to outline the rules and restrictions that should be considered when planning with products.

collision detection

collision detection

Collision Detection is a standard feature on all Double and Single-Sided Height-Adjustable benches. This system features a gyroscope based collision detection system that uses integrated sensors to detect when the table surface orientation is changed from default. This can occur when the table collides with an object in the up or down direction, or if the table is experiencing instability such as tipping in any direction. Once a detection is made, the table will stop, reverse direction, display an error code on the control panel, and temporarily lock out all adjustments.

hispace frames overview

- Linked stations create a benching environment that fully supports user sit/stand ranges, technology requirements and a high level of flexibility to create individual privacy
- Height-Adjustable Bench is made up of a simple kit of parts including a frame (double-sided, 120 or single-sided), worksurfaces, electrical components and screens that all must be specified separately

double-sided frame

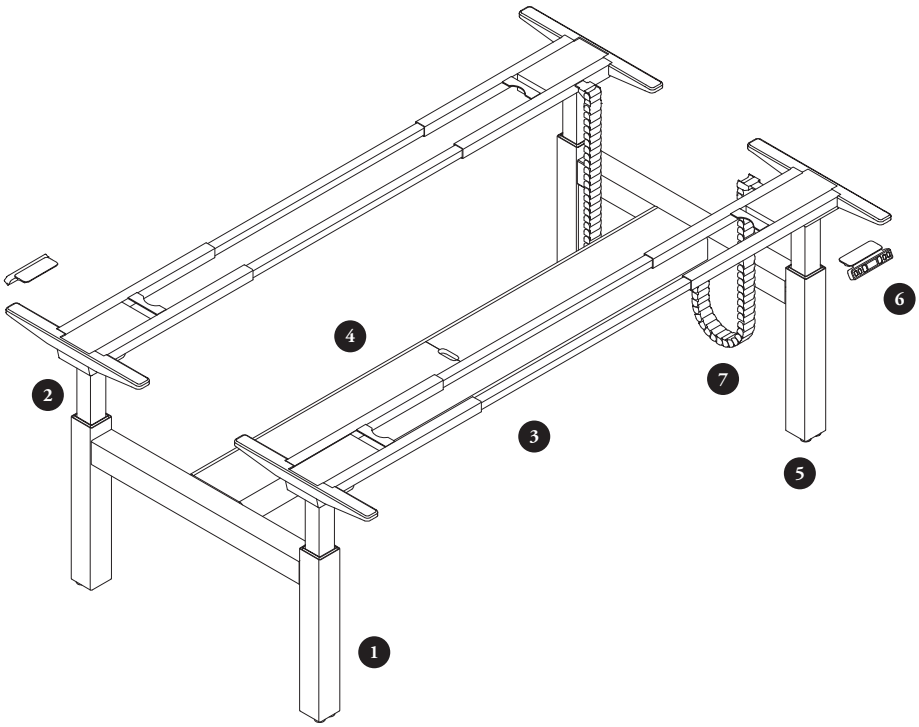

1. hiSpace Leg Column
2. Worksurface Strut
3. Telescopic Top Frame
4. Spine Tray
5. Leveler
6. Digital Switch
7. Vertical Wire Carrier (optional)

hispace frames overview (continued)

120 frame

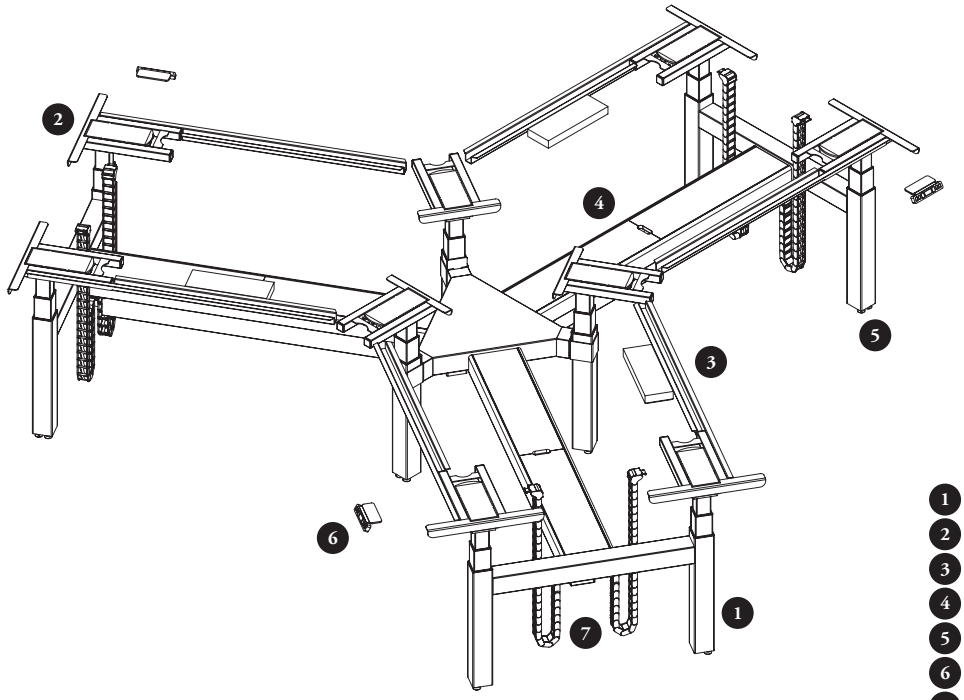

1. hiSpace Leg Column
2. Worksurface Strut
3. Top Frame
4. Spine Tray
5. Leveler
6. Digital Switch
7. Vertical Wire Carrier (optional)

hispace frames overview (continued)

single-sided frame

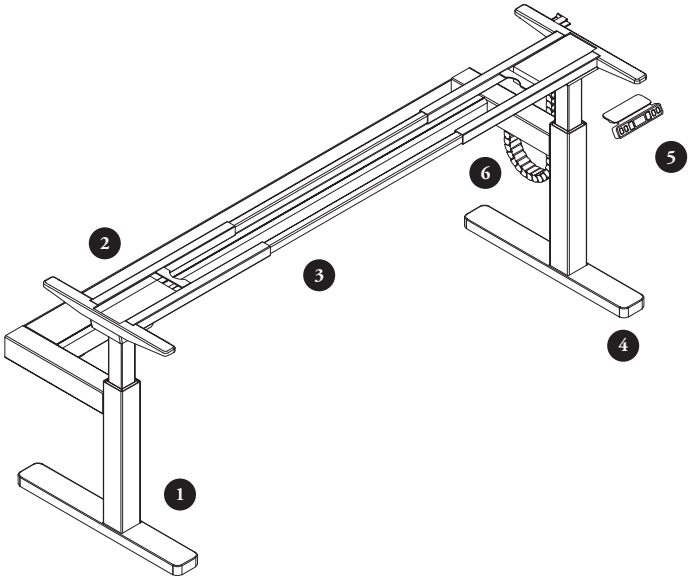

1. hiSpace Leg Column
2. Worksurface Strut
3. Telescopic Top Frame
4. Leveler
5. Digital Switch
6. Vertical Wire Carrier (optional)

hispace frame basics

The hiSpace Height-Adjustable Bench begins with a universal frame which can be linked to additional frames. Double-Sided frame sections accommodate two users, 120 frame sections accommodate three users and Single-Sided frames accommodate one user.

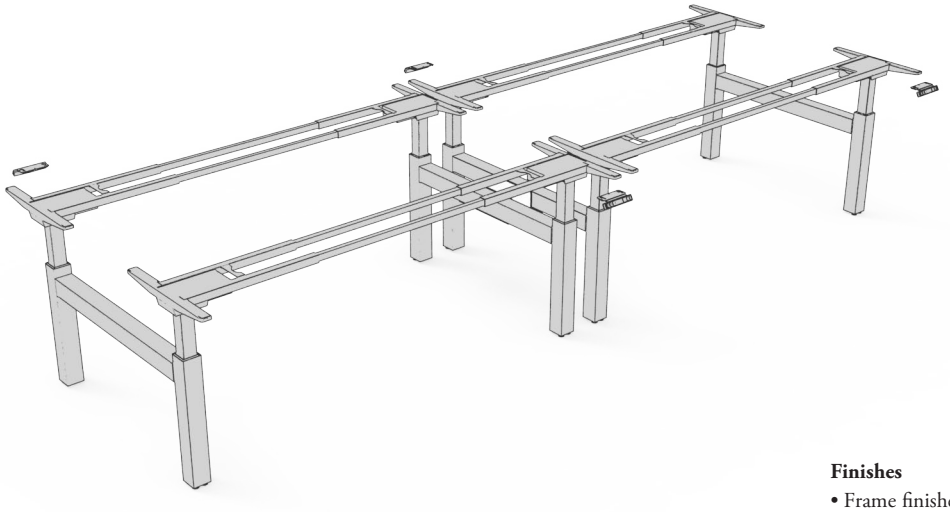

Finishes

- Frame finishes available:
  - Ebony
  - Very White

- Table Base size is determined by the size of the worksurface it is used with
- Width (to work with worksurface width)
  - 12 dm, 14 dm, 15 dm, 16 dm, 18 dm
- Switch:
  - Display with up/down memory
  - Toggle Display with Memory
  - None
- Base Mechanism
  - Extended Range Electric Height (620 mm - 1270 mm)
  - Fixed Height (740 mm)

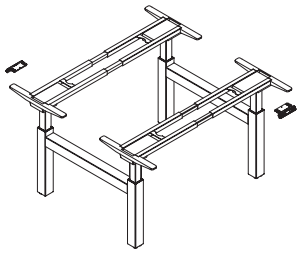

Double-Sided Frame (EHWBFYD)

- Depths (to work with worksurface depth)
  - 14 dm, 16 dm

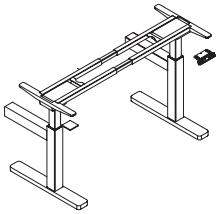

Single-Sided Frame (EHWBFYS)

- Depths (to work with worksurface depth)
  - 07 dm, 08 dm

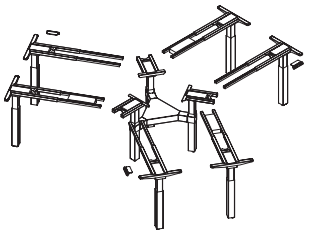

120 Frame (EHWBFYT)

- Depths (to work with worksurface depth)
  - 07 dm, 08 dm

planning with hispace frames

The following should be considered when planning with height-adjustable frames.

height-adjustment ranges

Extended Range Electric Frame heights range from 620 mm - 1270 mm. The height for Fixed option is 740 mm.

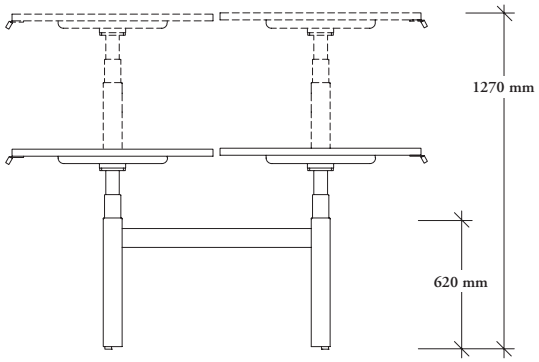

Height-Adjustable Range

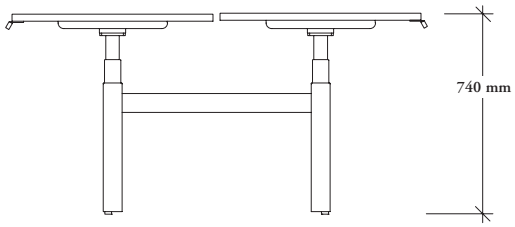

Fixed Height

frame depths

Double and Single-Sided Height-Adjustable Bench frame depths are 14 dm and 16 dm.

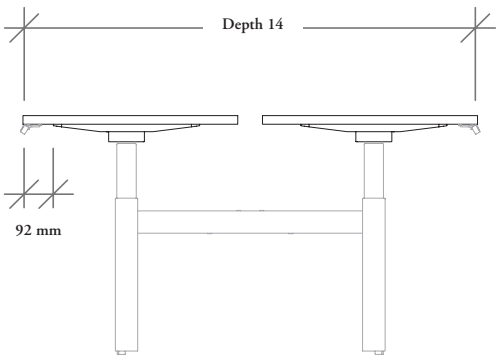

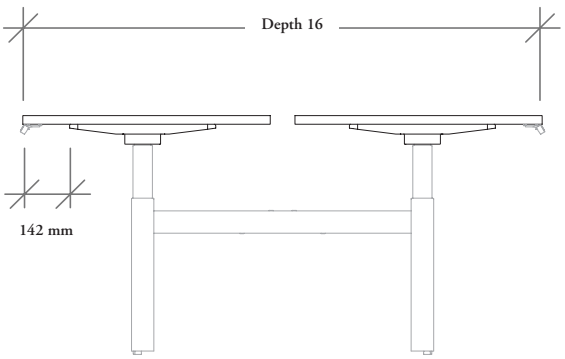

planning with hispace frames (continued)

frame widths

Double and Single-Sided Height-Adjustable Bench widths are nominal.
To calculate the user space between the legs of the frame, take the nominal width and - 2.48 dm

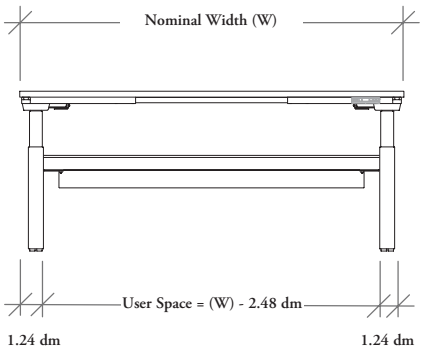

leveling

Double and Single-Sided benches allow for 50 mm of leveling. When more than 50 mm of leveling is required, a break in the bench run is necessary.
A site check prior to order is required to determine floor levels.

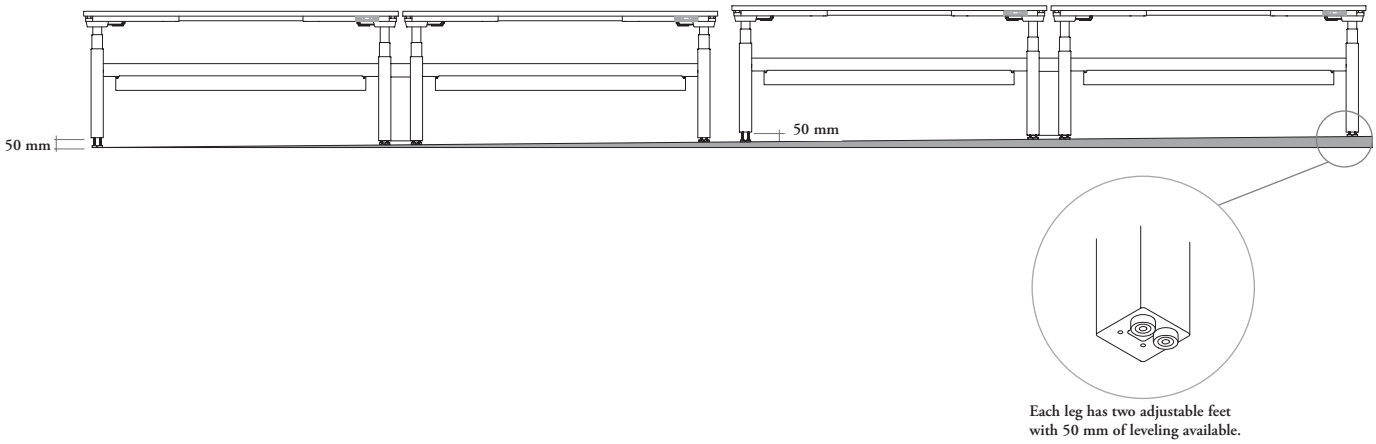

planning with hispace frames (continued)

height-adjustable vs. fixed height frames

Fixed-height columns can be used to cost-reduce a project, or to gradually phase-in height adjustability as needed.

Fixed-height columns are available as an option on all hiSpace frames:
- Double-Sided
- Single-Sided
- 120 HAB

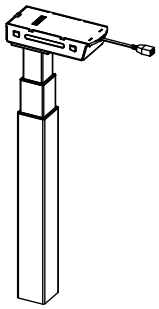

Height-Adjustable Leg

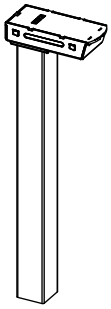

Fixed Height Leg

switches

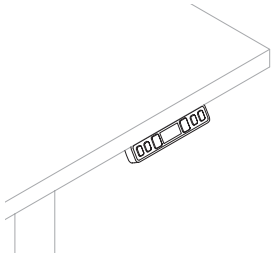

Digital Display Switch with Memory (D)

- Push buttons to move table up and down
- Digital display for height indication
- Three programmable memory settings
- Error Code Read-Out
- Switch Finish: Platinum Coordinate

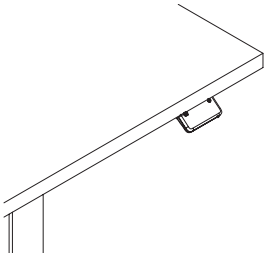

Toggle Display Switch with Memory (A)

- Up-Down Toggle for Intuitive Adjustment (lift switch or push down to move table up and down)
- Digital display for height indication
- Two programmable memory settings
- Switch Finish: Black

single-sided frame weldment cover basics

Frame Weldment Covers are used to cap off the back of the horizontal bar on a single-sided frame.

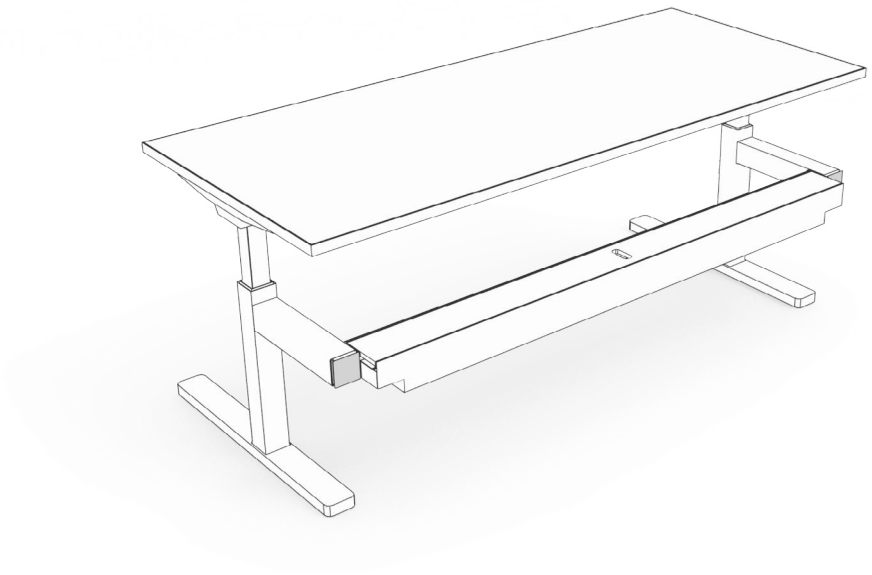

Finishes

- Finishes available:
  - Very White
  - Ebony

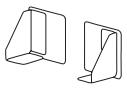

Single-Sided Frame Weldment Cover (EHWBFSC)

planning with single-sided frame weldment covers

The following should be considered when planning with the single-sided frame weldment covers.

Specify one set per workstation when there is no corridor screen.

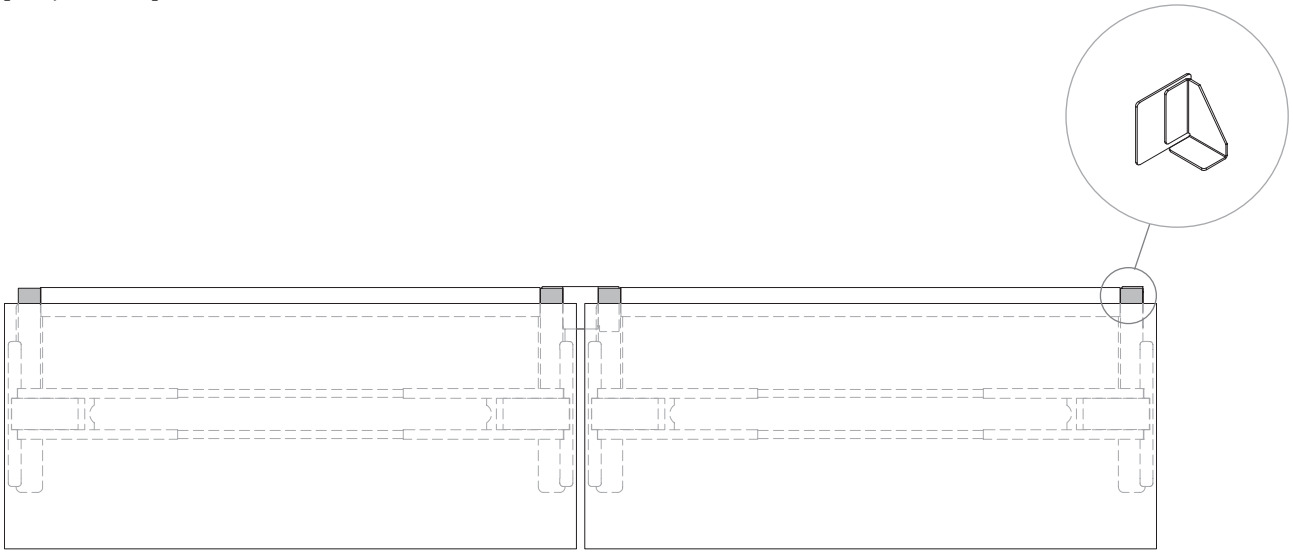

double & single-sided base link basics

Base Links tether height-adjustable frames to each other and ensure proper spacing.

Double-sided benches and single-sided benches cannot be linked together.

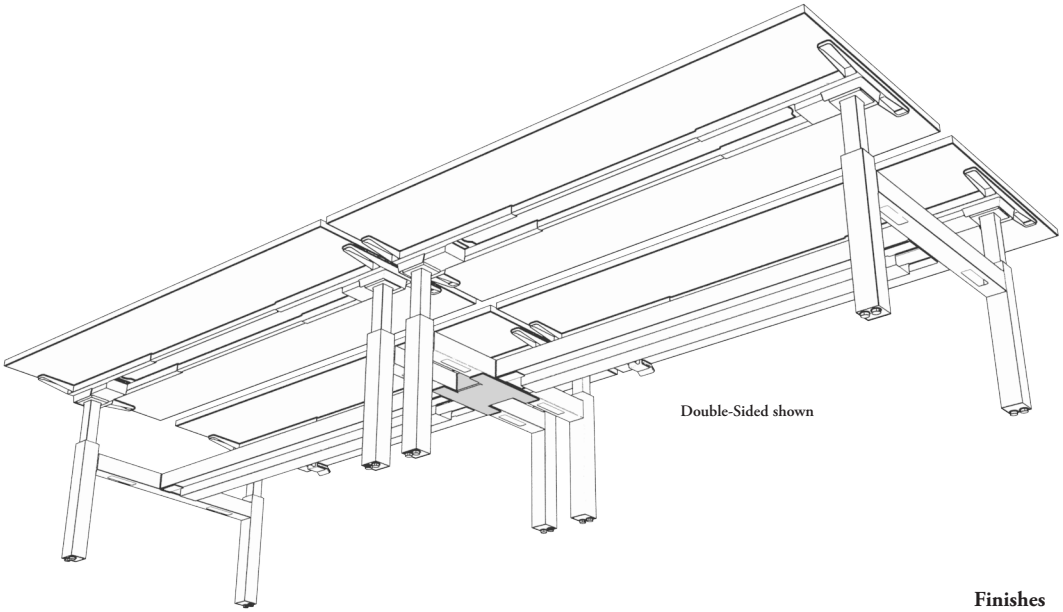

Double-Sided shown

Finishes
- Very White
- Ebony

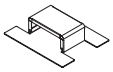

Double-Sided Base Link (EHWBFBD)

Single-Sided Base Link (EHWBFBS)

planning with double-sided base links

The following should be considered when planning with double-sided base links.

double-sided frames

Double-Sided Base Links must be specified when connecting more than one double sided frame together.

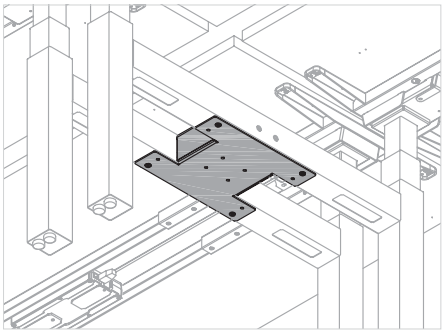

Base Link with no Spine Trays

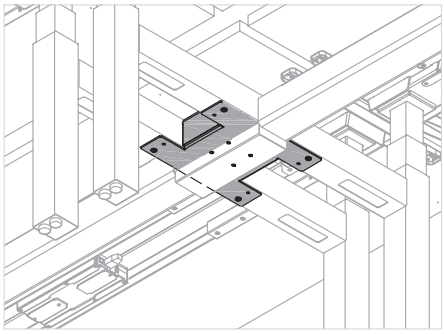

Base Link with Spine Trays

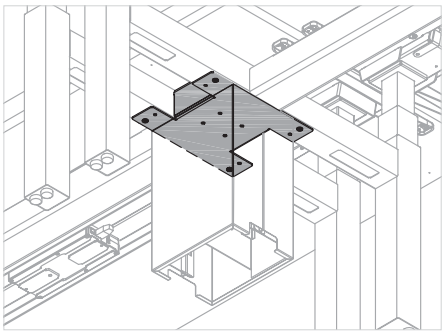

Base Link with Spine Trays and Cable Riser

planning with double-sided base links (continued)

linking double-sided frames

There is no limitation as to how many double-sided frames you can join side by side, as long as the leveling does not exceed 50 mm at a break in the bench and electrical requirements are maintained.

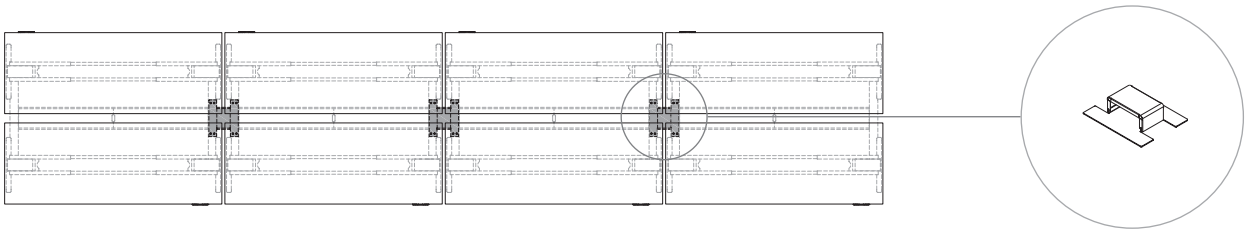

Double-Sided Base Link (EHWBFBD)

If longer runs are needed, smaller clusters can be parked beside each other without linking the bases.

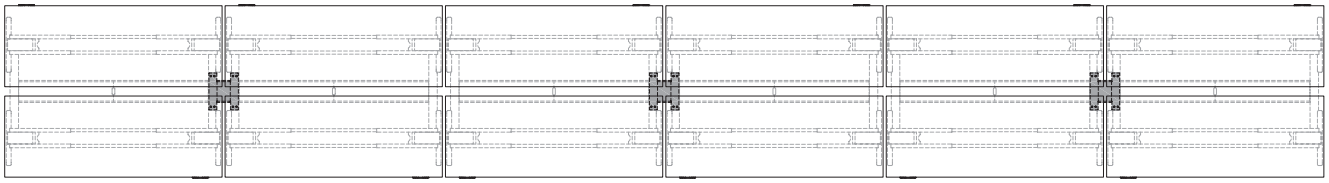

Split Split

planning with single-sided base links

The following should be considered when planning with single-sided base links.

single-sided frames

Single-Sided Base Links must be specified when connecting more than one single-sided frame together.

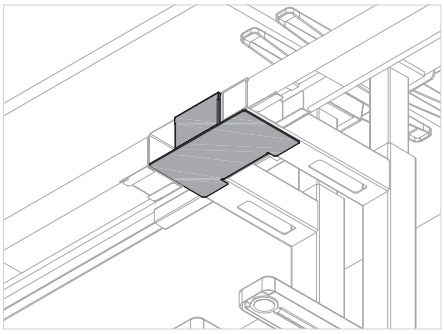

Base Link with no Spine Trays

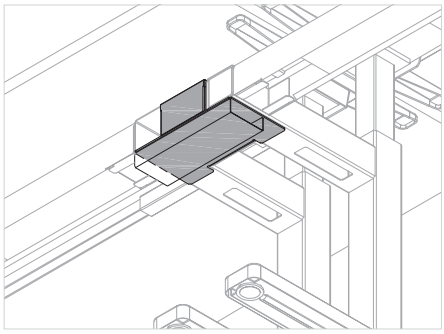

Base Link with Spine Trays

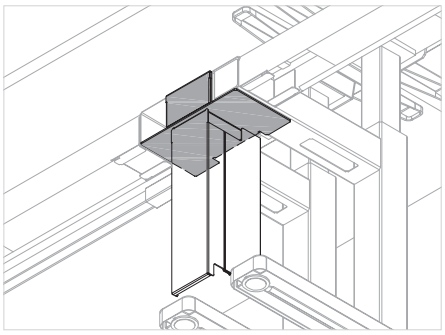

Base Link with Spine Trays and Cable Riser

planning with 120 base links

The 120 HAB Frame includes a 120 base link that ties the three center legs together and serves as support structure for spine trays and spine screens.

120 frames

Accessories and add-ons from the current Linear HAB catalogue should be specified when planning with 120 frames:
- Spine Trays
- Spine Screens
- Desk Edge Screens

Add-ons should match the nominal size of the frame.

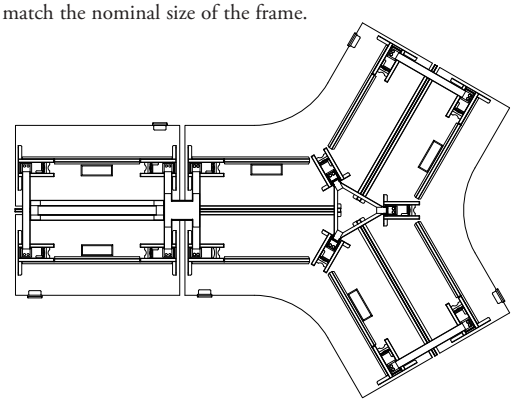

Frames can be linked together to create innovative workstation clusters.
Frame Links connect two frames side by side to allow power to continue between the frames and ensure accurate spacing.
Rectangular Double-Sided and 120 Frames can be connected to each other.

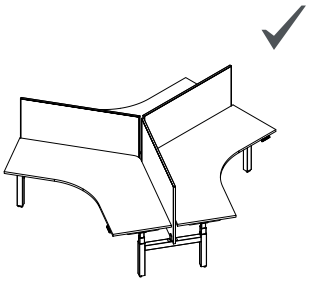

120 Frame - 3 Pack

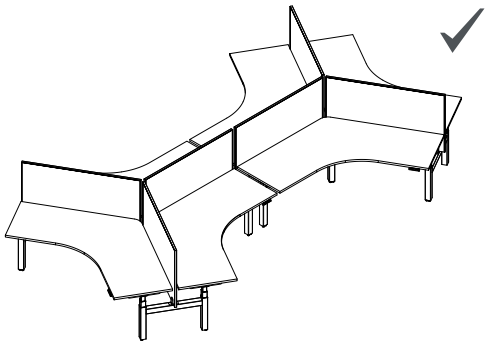

120 Frame - 6 Pack

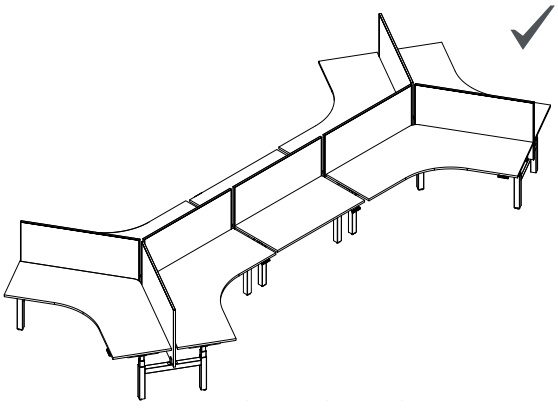

120 Frame + Linear Double-Sided HAB - 8 Pack

A single-sided run cannot be attached to a double-sided run.
Spine screens cannot be combined with desk edge screens.

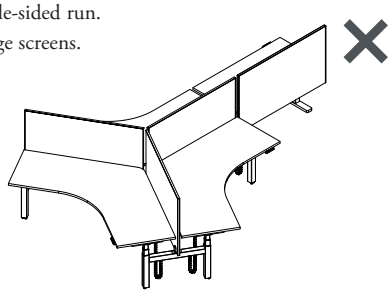

double & single-sided spine tray basics

Double and Single-Sided Spine trays serve as a raceway for power and data cables.

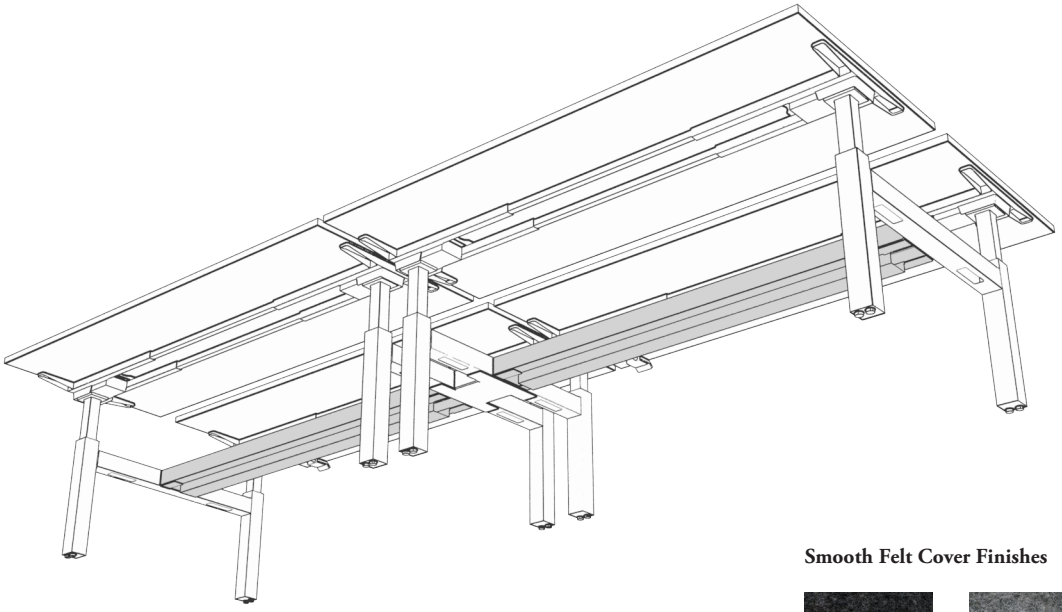

Smooth Felt Cover Finishes

Lunar

Pewter

- Widths:
  - 12 dm, 14 dm, 15 dm, 16 dm, 18 dm
- Finishes available:
  - Very White
  - Ebony

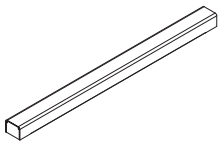

Double-Sided Spine Tray - Low Capacity (EHWBFTL)

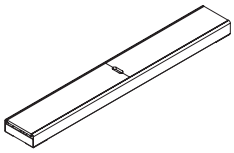

Double-Sided Spine Tray - Medium Capacity (EHWBFTM)

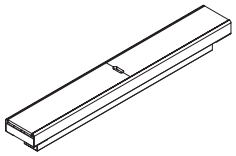

Double-Sided Spine Tray - High Capacity (EHWBFTH)

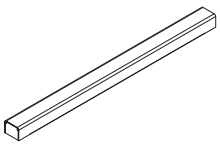

Single-Sided Spine Tray - Low Capacity (EHWBFSL)

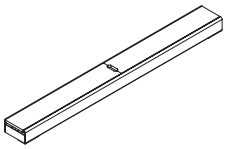

Single-Sided Spine Tray - Medium Capacity (EHWBFSM)

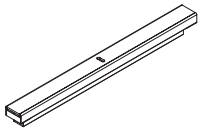

Single-Sided Spine Tray - High Capacity (EHWBFSH)

planning with double-sided spine trays

The following should be considered when planning with double and single-sided spine trays.

double-sided frames

There are three sizes of spine trays:
- Low Capacity
- Medium Capacity
- High Capacity

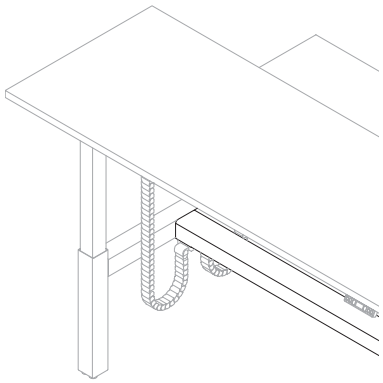

Low Capacity
• Accommodates data cables only

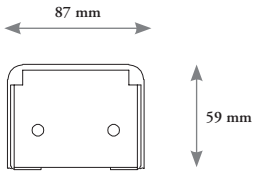

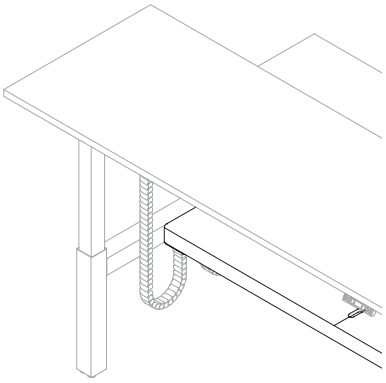

Medium Capacity
• Accommodates data and electric cables only

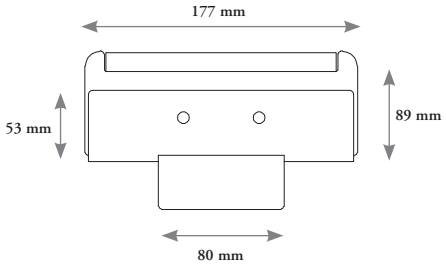

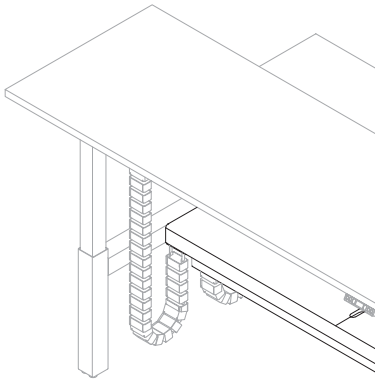

High Capacity
• Accommodates data and electric cables only

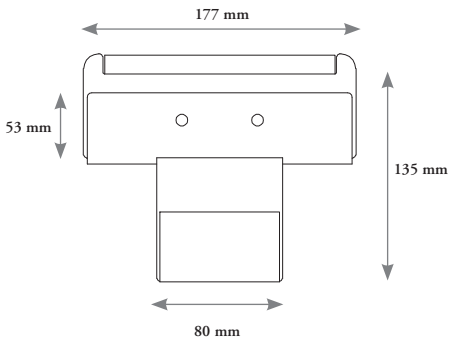

planning with single-sided spine trays

The following should be considered when planning with double and single-sided spine trays.

single-sided frames

There are three sizes of spine trays:
- Low Capacity
- Medium Capacity
- High Capacity

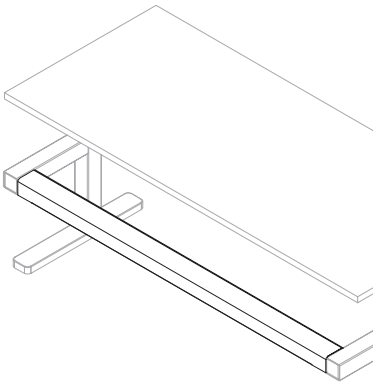

Low Capacity
- Accommodates data cables only

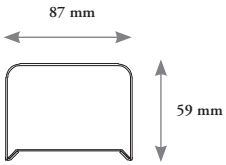

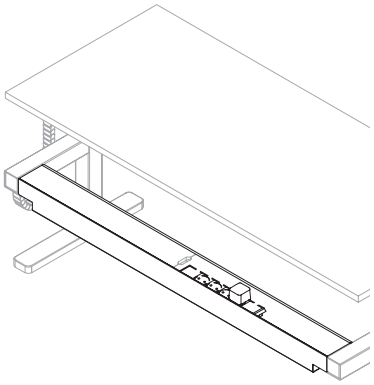

Medium Capacity
- Accommodates data and electric cables only

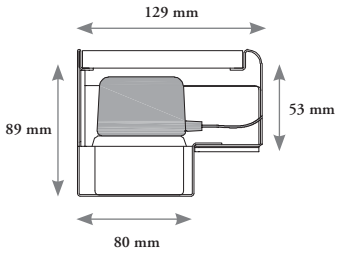

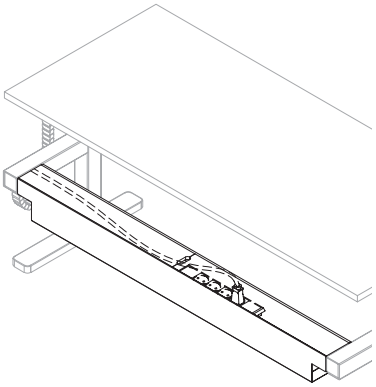

High Capacity
- Accommodates data and electric cables only

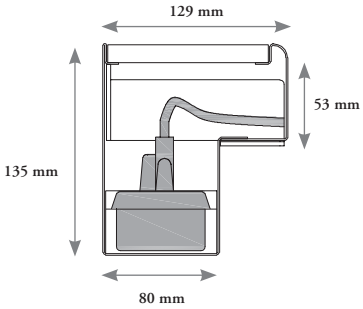

planning with single-sided spine trays (continued)

Apart from cable-carrying capacity there is also a difference in the functionality between the medium and high capacity spine trays:
- Only Medium and High Capacity spine trays include a felt cover to allow for easy accessibility to the power bars.
- Low Capacity spine trays carry a limited amount of power cords and do not accommodate power bars.

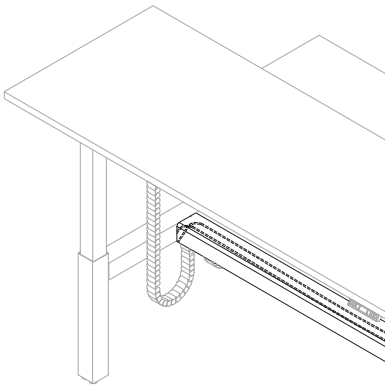

Low Capacity
- Low Capacity Spine trays only accommodate power cords

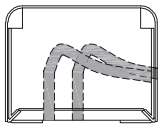

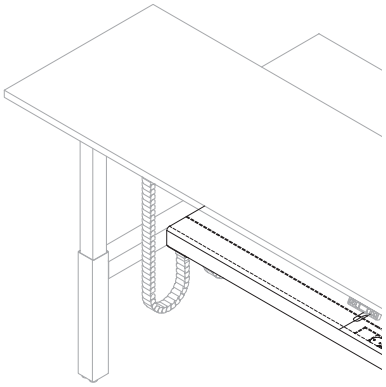

Medium Capacity
- Medium Capacity Spine trays are optimized for more horizontally-oriented plugs

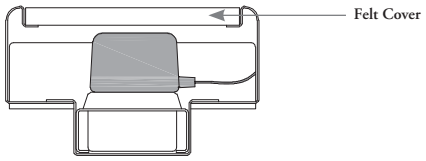

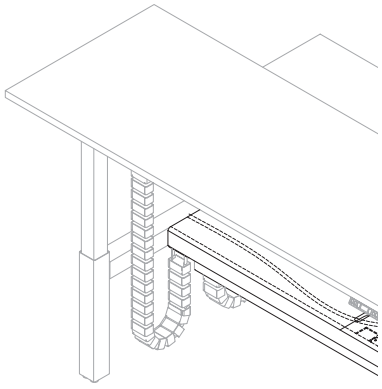

High Capacity
- High Capacity Spine trays are optimized for vertically-oriented plugs

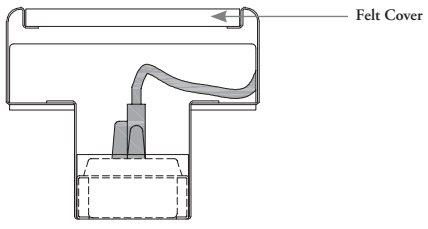

planning with single-sided spine trays (continued)

Power is routed up from the floor through an End Gable or Cable Riser to the Spine Tray. From the Spine Tray, the power is then directed up through an Vertical Wire Carrier to the worksurface. The Spine Tray capacity (Low, Medium or High) will depend on the amount and thickness of the power cords.

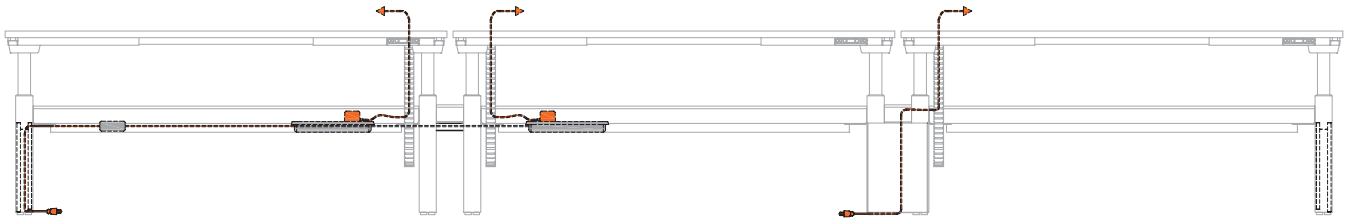

universal spine tray cover basics

The Universal Spine Tray Cover is secured by an integrated magnet and used to hide threaded inserts in the frame that are unused in certain configurations.

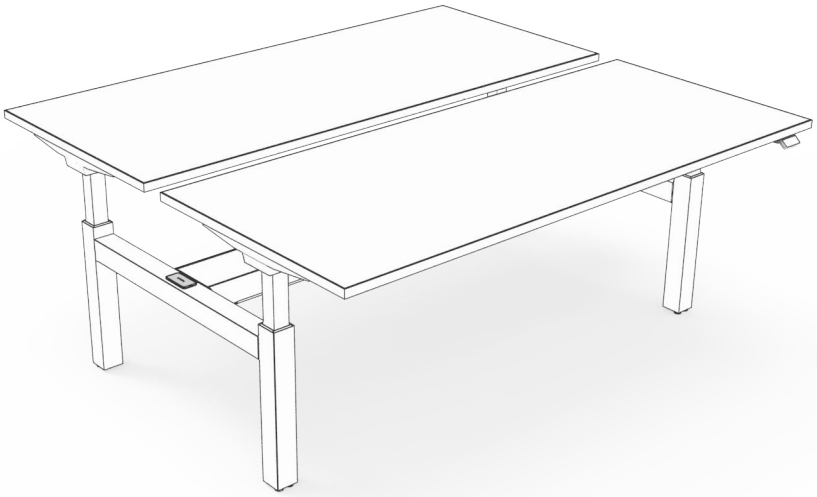

Finishes

- Finishes available:
  - Very White
  - Ebony

Universal Spine Tray Cover (EHWBFTV)

- Available in pairs

planning with universal spine tray covers

The following should be considered when planning with universal spine tray covers.

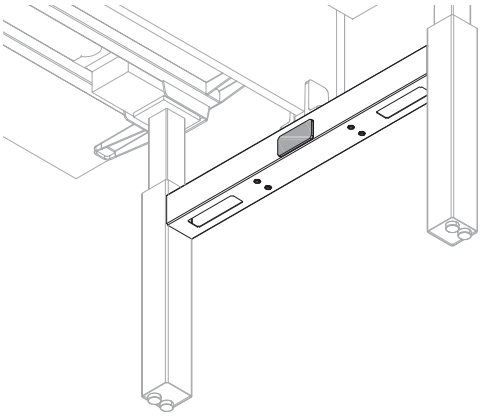

When no spine tray is specified, there will be inserts left exposed on each side of the frame.

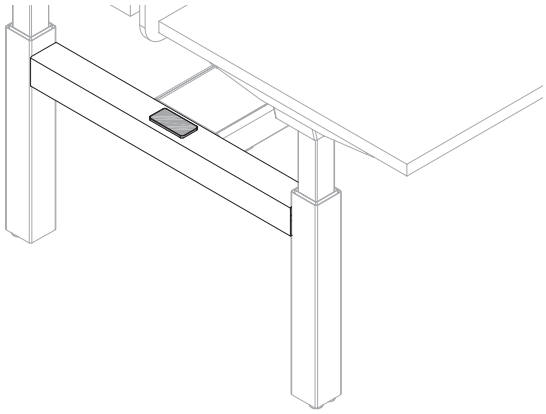

When there is no spine screen specified or if a desk edge infinity screen is specified, the inserts for the spine screen are exposed.

double & single-sided rectangular worksurface basics

Rectangular Worksurfaces are available with a gap to accommodate screens. Power accessibility is available through the worksurface to spine to accommodate screens and pinch clearances.

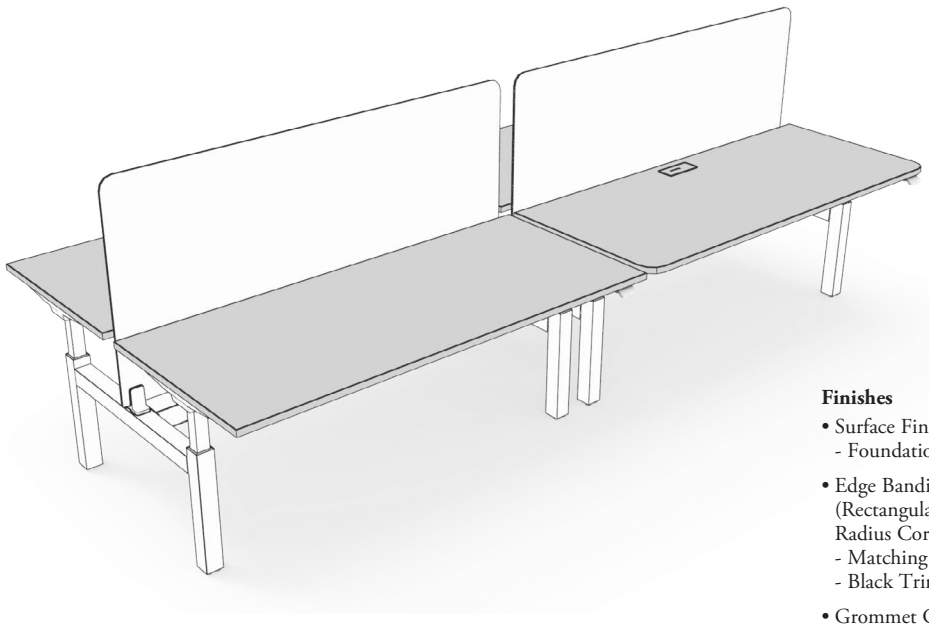

- Depths:
  - 07 dm, 08 dm
- Widths:
  - 12 dm, 14 dm, 15 dm, 16 dm, 18 dm
- Access Door Cut Out Size:
  - NN (None)
  - 04 dm
  - 06 dm

- Grommet Options:
  - No Grommet
  - Grommet Centre
  - Grommet Left
  - Grommet Right
  - Both Left and Right

Finishes

- Surface Finishes available:
  - Foundation Laminate
- Edge Banding Finish: (Rectangular Worksurface with Radius Corners only)
  - Matching Trim
  - Black Trim
- Grommet Cap Finishes available:
  - Very White
  - Ebony
- Access Door Finish:
  - Metal
  - Accent

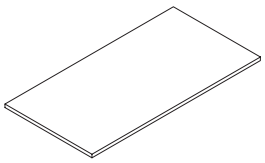

Double-Sided Rectangular Worksurface with Square Corners (EHWBWBD)

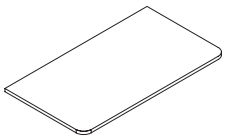

Double-Sided Rectangular Worksurface with Radius Corners (EHWBWJD)

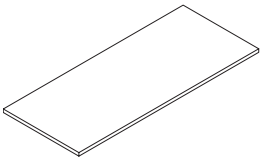

Single-Sided Rectangular Worksurface with Square Corners (EHWBWBS)

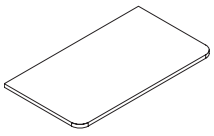

Single-Sided Rectangular Worksurface with Radius Corners (EHWBWJS)

hispace 120 worksurface basics

The hiSpace 120 worksurface is to be paired with the 120 frame to create a height-adjustable 120 bench station.

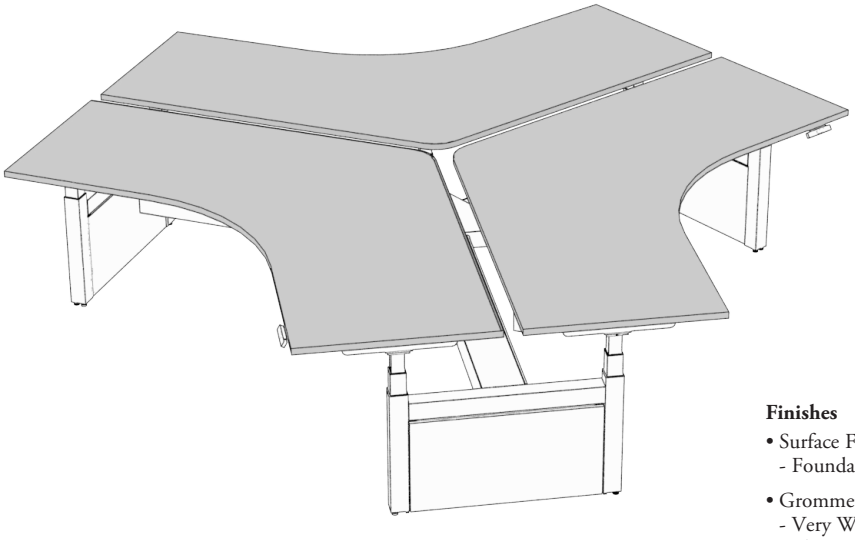

- Depths:
  - 07 dm, 08 dm
- Widths:
  - 12 dm, 14 dm, 15 dm
- Access Door Cut :
  - None
  - Left and Right Door Cut Out
  - Left Access Door Cut Out
  - Right Access Door Cut Out

- Grommet Cut Out Locations:
  - No Grommet
  - Center
  - Left
  - Right
  - Left and Right
  - Center, Left and Right

Finishes

- Surface Finishes available:
  - Foundation Laminate
- Grommet Cap Finishes available:
  - Very White
  - Ebony
- Access Door Finish:
  - Metal
  - Accent

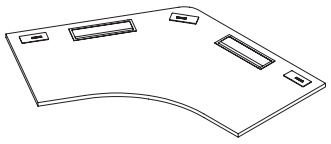

hiSpace 120 Worksurface with Square Corners (EHWBWBT)

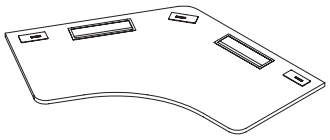

hiSpace 120 Worksurface with Radius Corners (EHWBWJT)

planning with double & single-sided rectangular worksurfaces

The following should be considered when planning with Double and Single-Sided Height-Adjustable Bench Rectangular worksurfaces.

When specifying worksurfaces for a Double-Sided Bench, two worksurfaces per workstation must be specified:
- Frame Depth (14) must be paired with Worksurface Depth (07)
- Frame Depth (16) must be paired with Worksurface Depth (08)

Double-Sided Rectangular Worksurface with Square Corners

Double-Sided Rectangular Worksurface with Radius Corners

planning with double & single-sided rectangular worksurfaces (continued)

depths and widths

Worksurface depths and widths are nominal.

Depths

• Medium Capacity Spine trays are optimized for more horizontally-oriented plugs

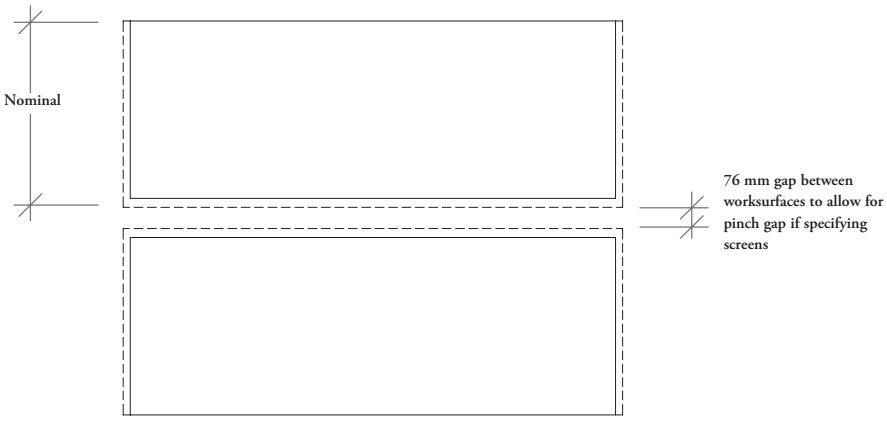

Widths

All worksurfaces must have 25 mm clearance around the sides for a pinch gap.

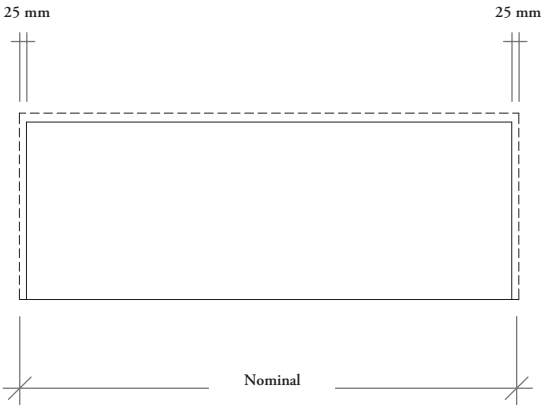

planning with double & single-sided rectangular worksurfaces (continued)

grommets

• Grommet cut out options:
- None
- Centre
- Left
- Right
- Both Left & Right

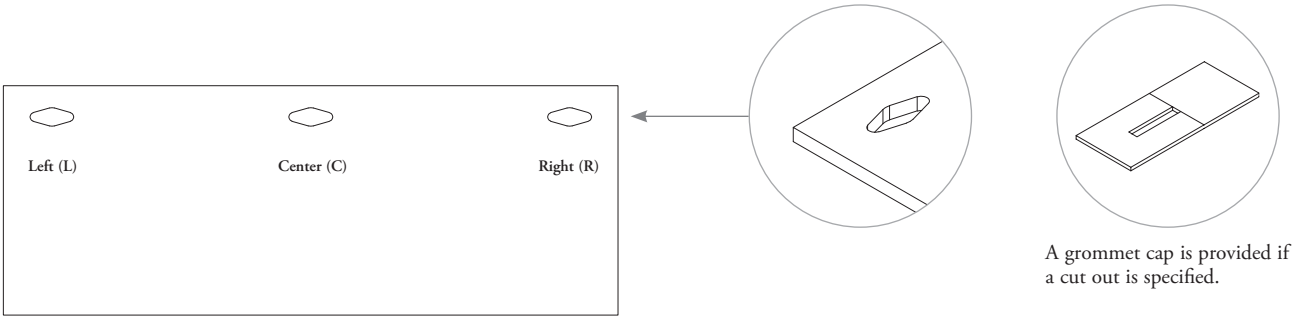

A grommet cap is provided if a cut out is specified.

access doors

• Access door options:
- None
- Centered

• There are two sizes of access doors
- 04 dm
- 06 dm

• When specifying 1200 mm wide worksurface, only the 400 mm Access Door is applicable

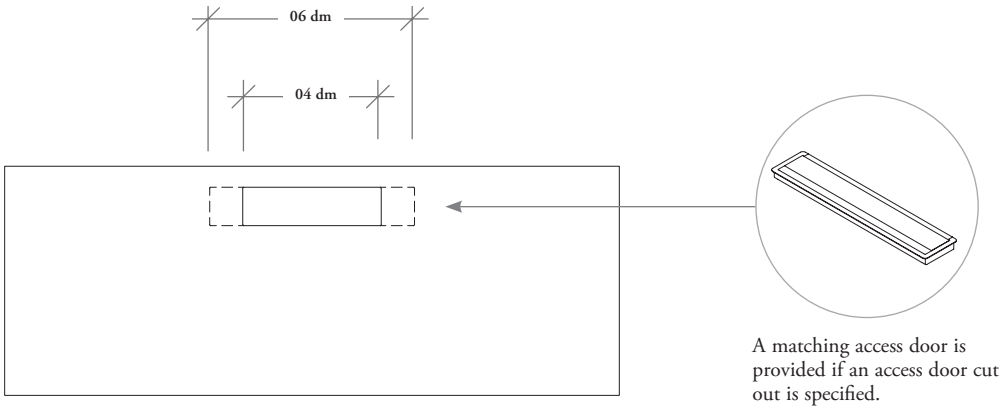

A matching access door is provided if an access door cut out is specified.

planning with 120 worksurfaces

grommet cut out locations for 120 worksurfaces

• Grommet cut out locations:
- None
- Center
- Left
- Right
- Left & Right
- Center, Left & Right

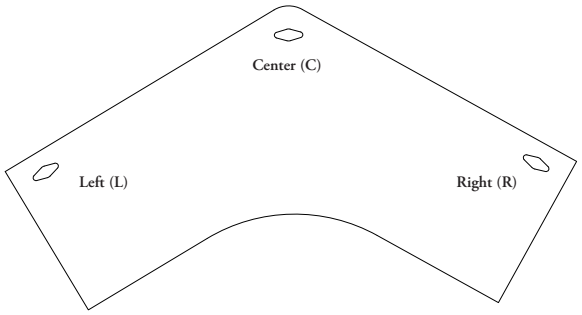

access door cut out for 120 worksurfaces

• Access Door options:
- None
- Left Access Door
- Right Access Door
- Left & Right Access Door

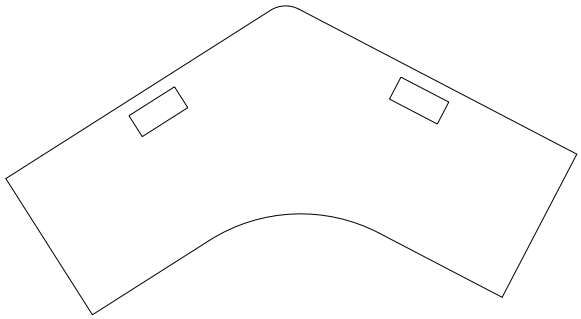

under worksurface cable tray basics

Under Worksurface Cable Trays provide housing for an under worksurface power option that is accessible through the access door cut out. The tray also provides a storage area for cables if no plug box is specified.

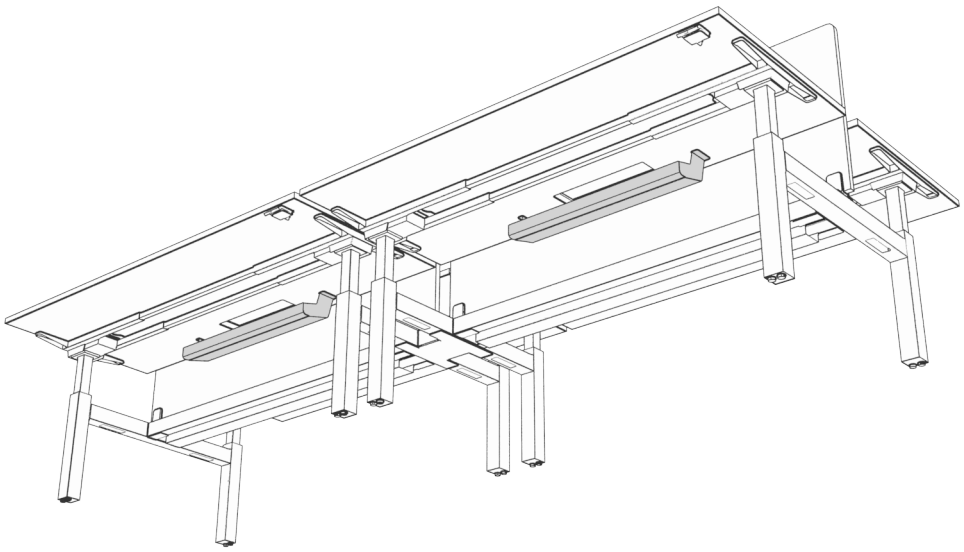

Finishes

- Finish available:
  - Very White
  - Ebony

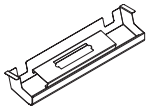

Under Worksurface Cable Tray (EHWBEUY)

- Size available:
  - 04 dm, 06 dm
- Plug Mount:
  - None
  - Hard Wire 4-Gang
  - Powerbox 4-Gang (specified separately)

planning with under worksurface cable trays

The following should be considered when planning with under worksurface cable tray.

double-sided

When specifying an access door cut out, you must specify an under worksurface cable tray. All three types of cable trays will work with both size of access door cut outs (04 dm and 06 dm).

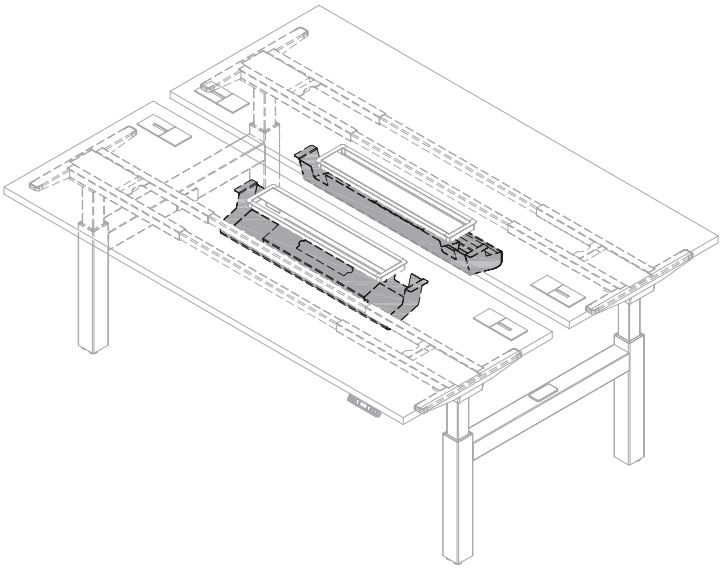

There are three under worksurface plug mount options available:

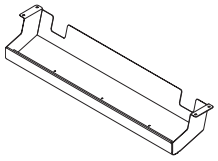

None
If no electrics are specified, the Cable Tray acts as a place to store power cables.

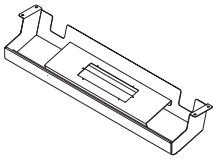

Hard Wire 4-Gang
Mounting of this option is for hard wired electrics which must be done by an electrician.

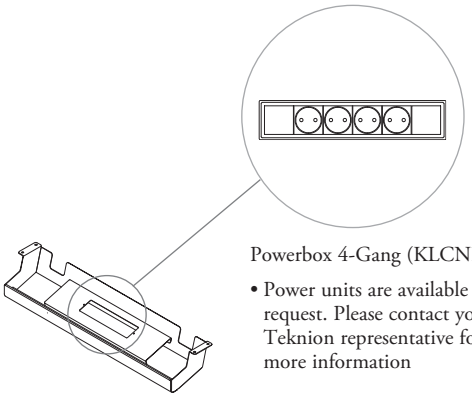

Powerbox 4-Gang (KLCNB4)

- Power units are available upon request. Please contact your Teknion representative for more information

Powerbox 4-Gang
This option includes a mounting plate that will accommodate a Powerbox.

planning with under worksurface cable trays (continued)

single-sided

Only the Single-Sided Low Capacity Spine Tray can be specified when planning with the Under Worksurface Cable Tray.

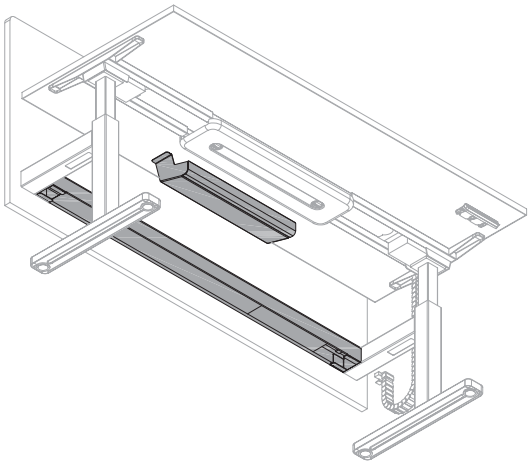

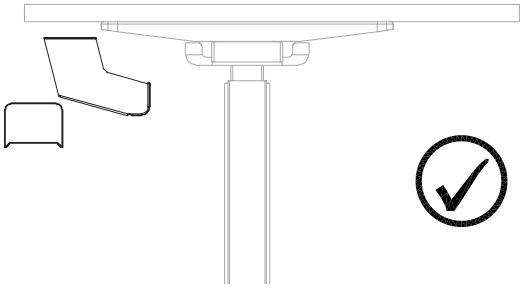

On Single-Sided Height-Adjustable Bench, the 1" pinch gap between spine tray and the Under Worksurface Cable Tray can only be achieved by using a low-capacity spine tray.

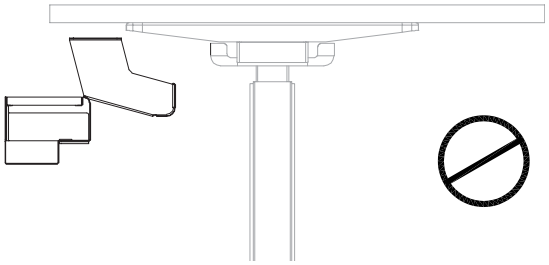

Both 4-Gang under worksurface trays cannot be used with a medium or high capacity spine tray as they will collide at the lowest worksurface height.

power bar holder for spine tray basics

Power Bar Holders secure power bars within medium and high capacity spine trays.

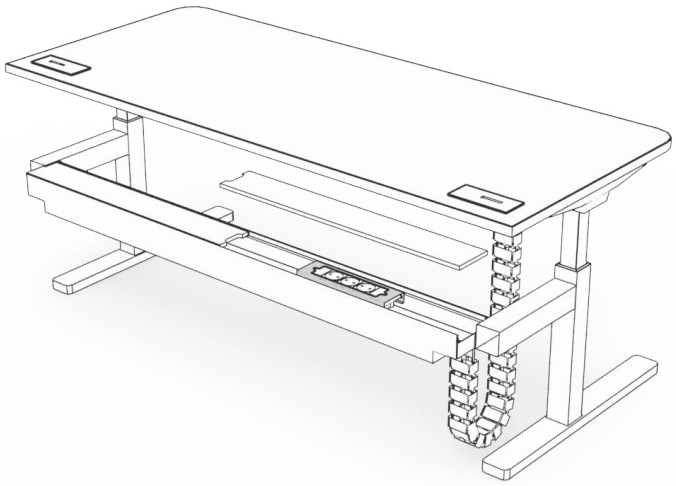

Finishes

- Finishes available:
  - Very White
  - Ebony

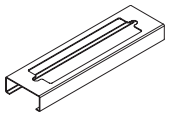

Power Bar Holder for Spine Trays (EHWBETP)

- Plug Mount:
  - None
  - Hard Wire 4-Gang
  - Powerbox 4-Gang (specified separately)

cable riser basics

Cable Risers are used to feed power into the bench system.

- Cable Risers are used to feed power into the bench system. It includes a plug box holder, when specified. Plug boxes sold separately
- Can be used with or without spine tray

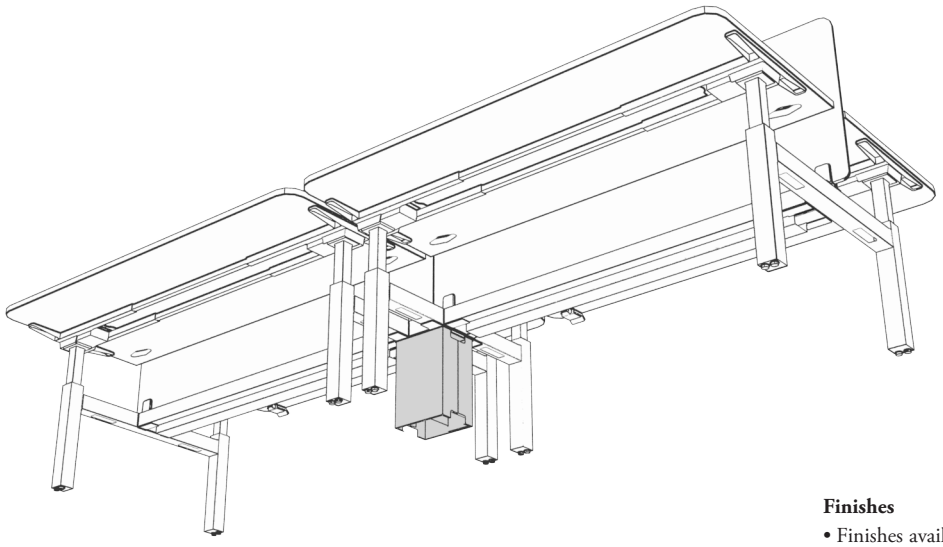

Finishes

- Finishes available:
  - Very White
  - Ebony

Double-Sided Cable Riser (EHWBECD)

- Plug Box Options available:
  - None
  - Hard Wire 3-Gang
  - Powerbox 3-Gang (two power, one blanking)

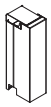

Single-Sided Cable Riser – Mid (EHWBECM)

- Plug Box Options available:
  - None
  - Hard Wire 3-Gang
  - Powerbox 3-Gang (two power, one blanking)

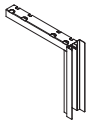

Single-Sided Cable Riser – End (EHWBECE)

- Depths:
  - 07 dm, 08 dm

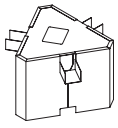

hiSpace 120 Cable Riser - Mid (EHWBECMT)

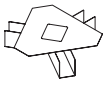

hiSpace 120 Wire Bridge (EHWBEWT)

planning with double-sided cable riser

The following should be considered when planning with Double-Sided Cable Risers.

- Double-Sided Cable Risers attach to the Double-Sided Frame and will allow for the main power source to route from the floor to the workstation
- A holder is specified if a plug box is specified. Plug box must be specified separately
- The Double-Sided Cable Riser can be used with or without a spine tray

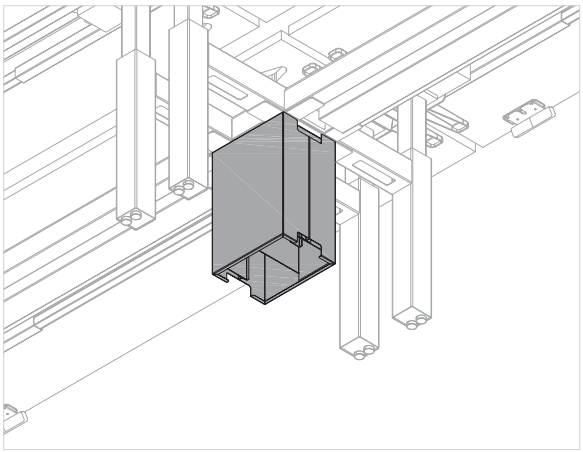

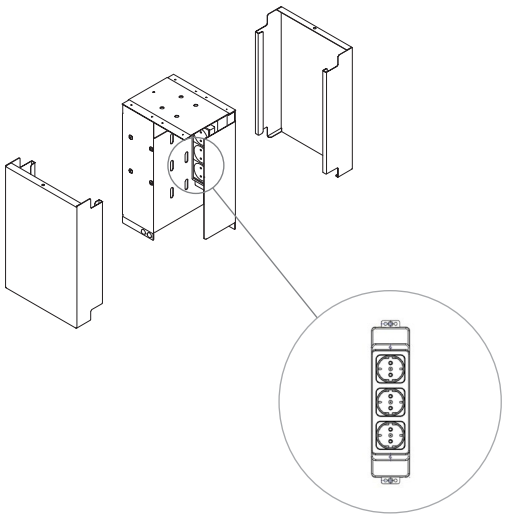

Powerbox 3-Gang (KLCNB4)

- Power units are available upon request. Please contact your Teknion representative for more information

planning with single-sided cable riser – mid

The following should be considered when planning with Single-Sided Cable Risers – Mid.

Single-Sided Cable Riser – Mid attaches to the Single-Sided Frame and allows for the main power source to route from the floor to the workstations.

Can be used with or without a spine tray.

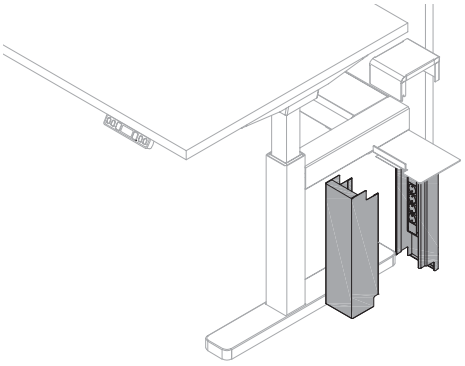

With Spine Tray

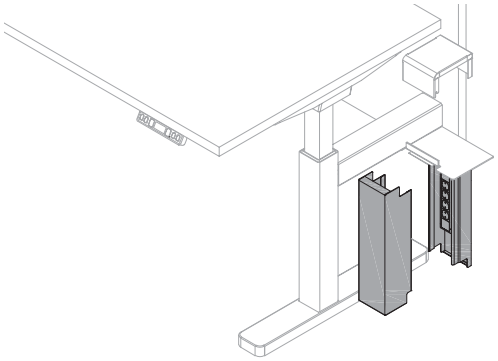

Without Spine Tray

planning with single-sided cable riser – end

Single-Sided Cable Riser - End allows cables to feed into a single-sided system from either end of the bench.

Cable Riser attached to the Cable Tray to allow power to be routed from the floor.

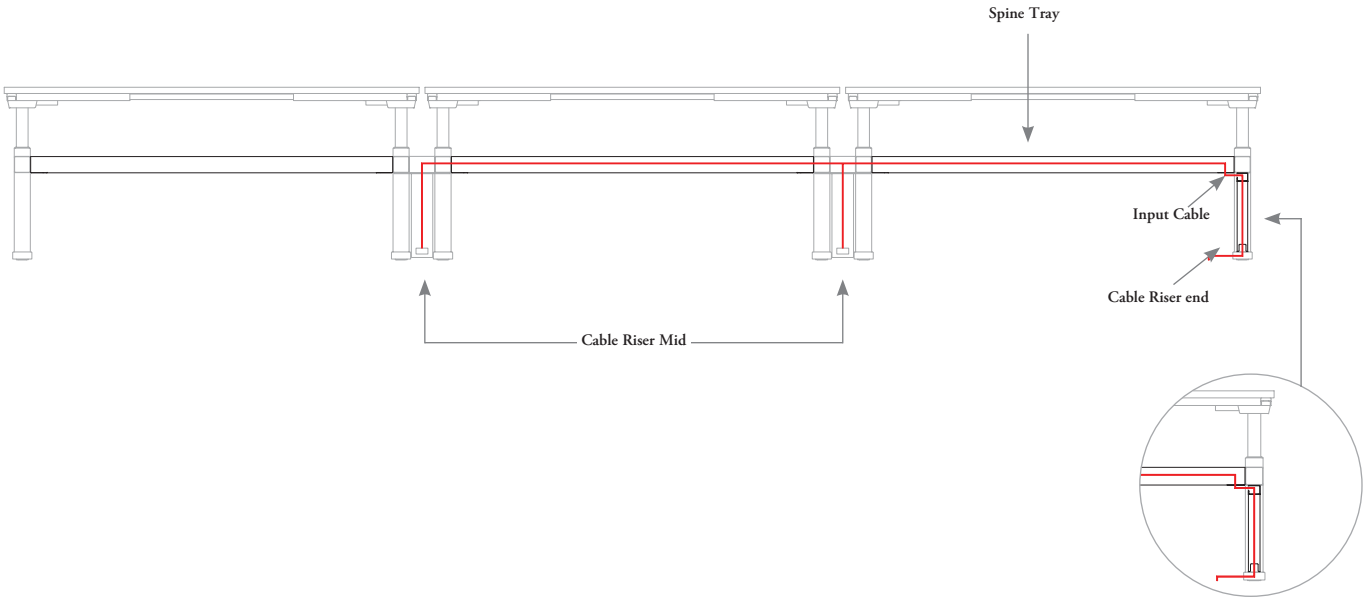

hispace planning with 120 cable riser

The following should be considered when planning with 120 Cable Risers.

120 Cable Riser

The base link for 120 HAB is already included in the frame. It is fastened to the underside of the integrated 120 base link that is part of the frame.

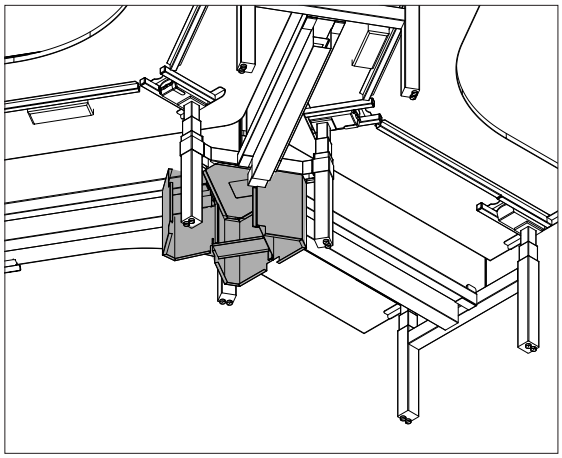

Three types of base feed can be hosted within the 120 mid-cable riser:
- Standard Base Feed
- Split Base Feed
- Chicago Base Feed

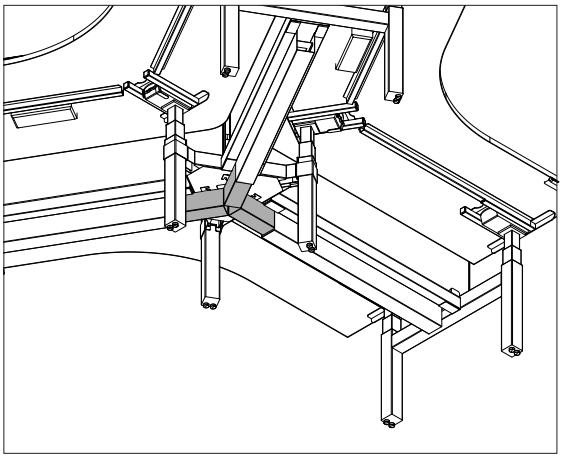

When feeding power through the central column is not required, a 120 wire bridge can be specified to facilitate cable travel across the three spine trays.

hispace planning with 120 cable riser (continued)

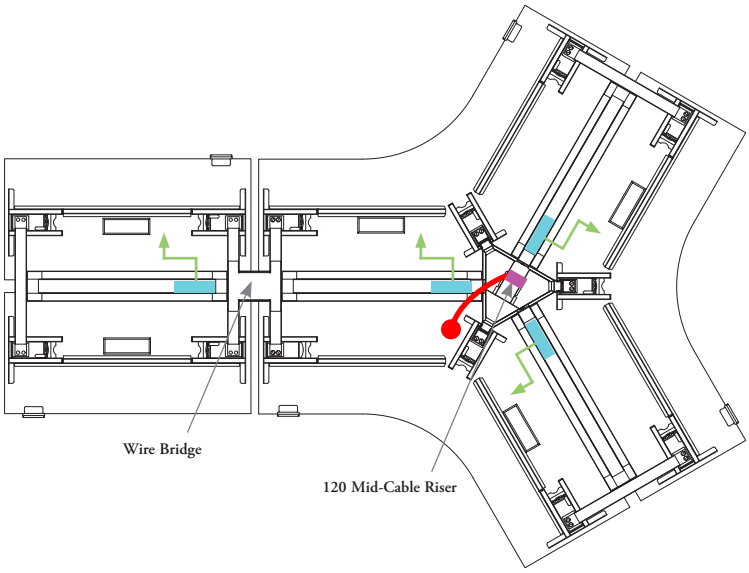

Wiring with mid cable riser entry

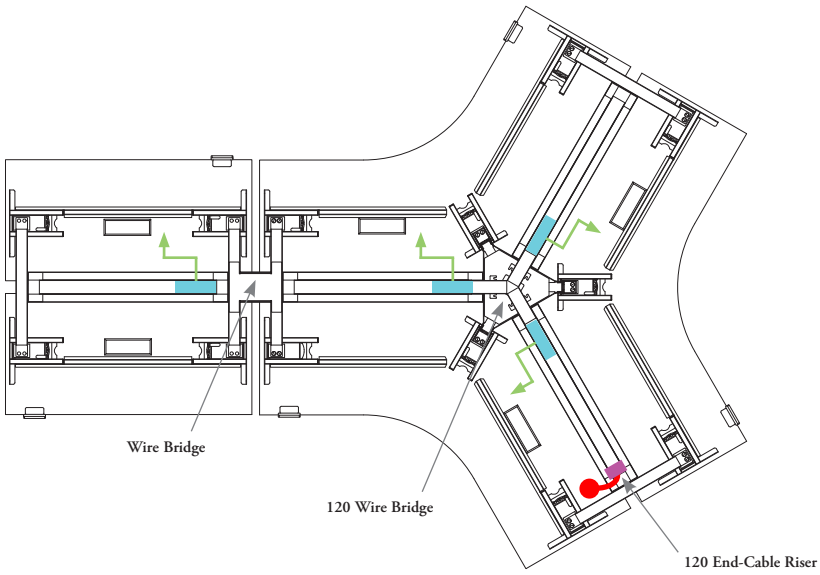

Wiring with end cable riser entry

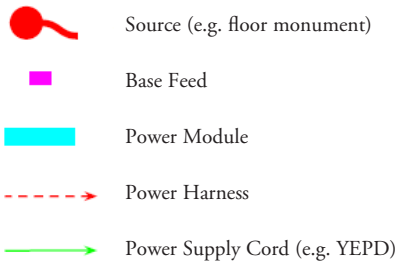

end gable basics

End Gables provide a more enclosed tailored look to the height-adjustable bench frame.

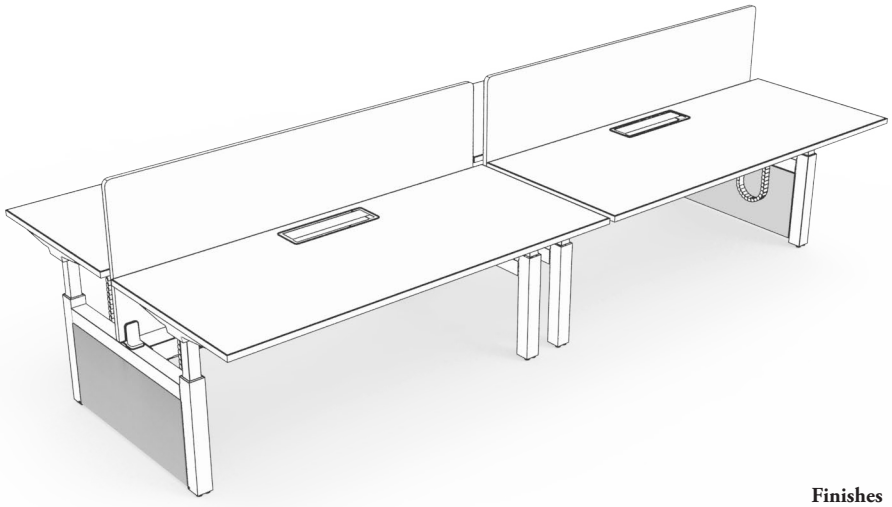

Finishes

- Outer Finish Options:
  - Metal (Very White or Ebony)
  - Laminate
  - Smooth Felt (Lunar or Pewter)
- Inner Finish Options:
  - Very White
  - Ebony

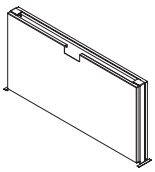

End Gable (EHWBCGE)

- Depths available:
  - 14 dm and 16 dm
- Cable Exit Option:
  - Yes or No

planning with end gables

The following should be considered when planning with end gables.

End Gables provide two solutions:
- Closes the ends of the each bench run for a finished look
- Routes power from the floor or wall up and into the spine tray

If the cable pass-through option is specified on the end gable, there will be a cut out in the top of the end gable to allow for the cable to pass through to spine tray.

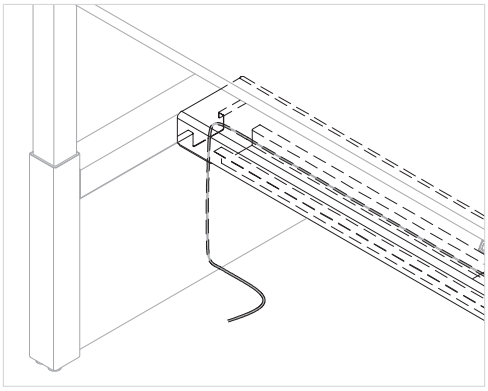

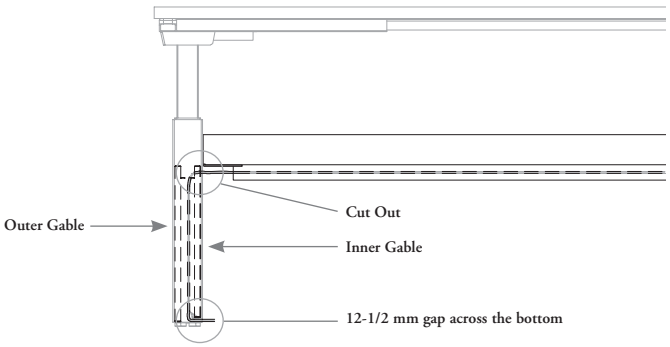

vertical wire carrier basics

Vertical Wire Carrier serve as a raceway for power and data cables to run from spine trays to worksurfaces.

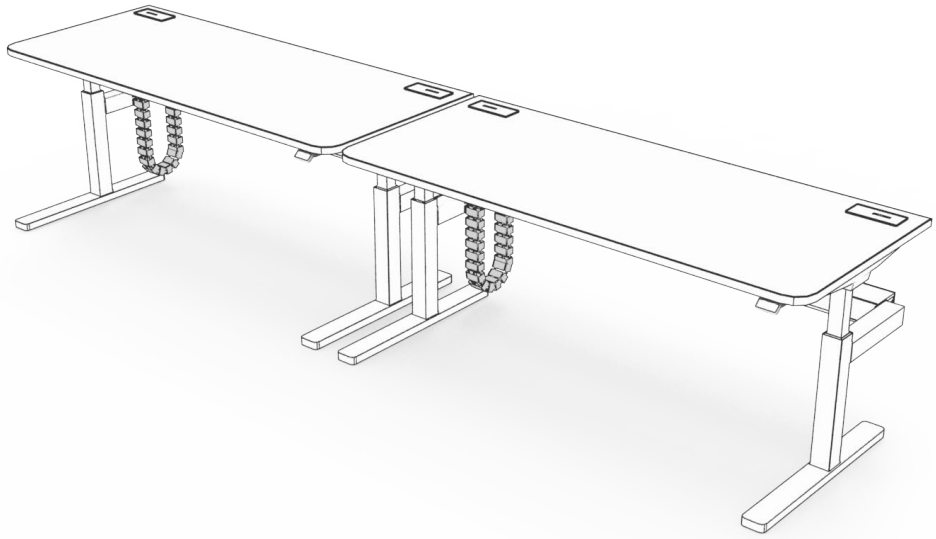

Single-Sided (Shown), same for Double-Sided

Finishes

- Finish Options:
  - Very White
  - Ebony

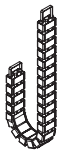

Vertical Wire Carrier (EHWBEEE)

- Style available:
  - Standard Capacity - Perpendicular
  - High Capacity - Perpendicular

planning with vertical wire carrier

The following should be considered when planning with Vertical Wire Carriers.

There are two sizes of Vertical Wire Carriers that will accept different volumes of cables:
- Standard Capacity
- High Capacity

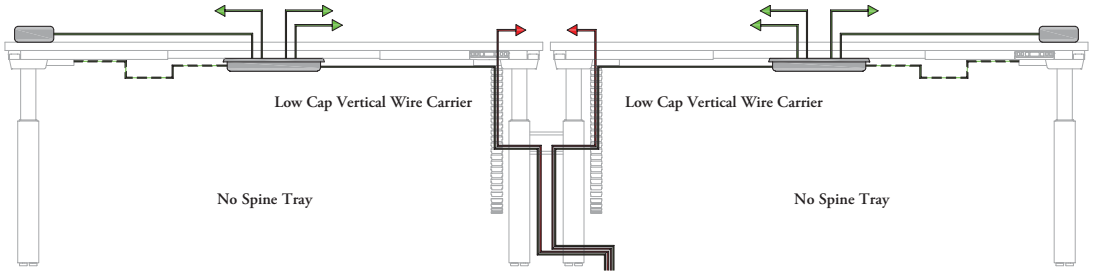

It is recommended that when electrics are routing directly to the worksurface from floor, the standard capacity Vertical Wire Carrier should be specified.

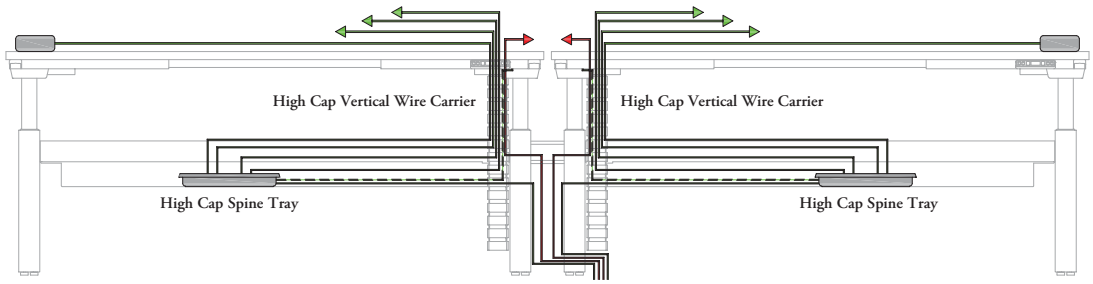

When a there is a Spine Tray, there will be more cabling and the high capacity Vertical Wire Carrier should then be specified.

vertical wire carrier bracket & cover basics

Vertical Wire Carrier Bracket and Cover Kit may be specified for docking the Vertical Wire Carrier onto the base when there are no Spine Trays.

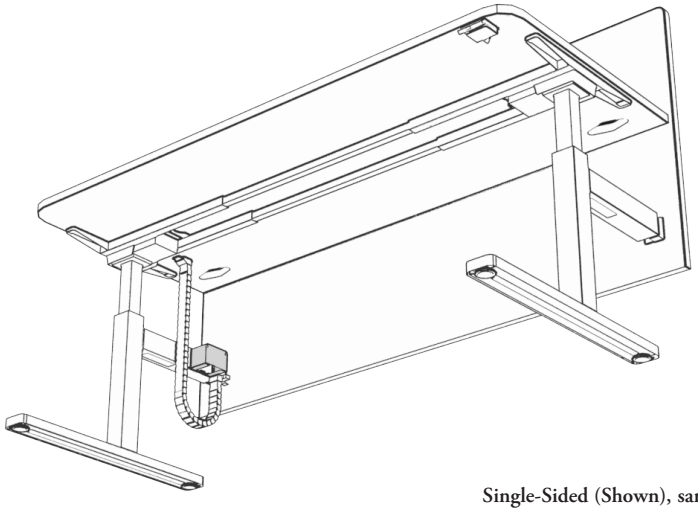

Single-Sided (Shown), same for Double-Sided

Finishes

- Finish Options:
  - Very White
  - Ebony

Vertical Wire Carrier Bracket & Cover (EHWBEEB)

felt cable cover organizer basics

The Felt Cover Cable Organizer acts to hide the bench's electrics control box and associated wiring.

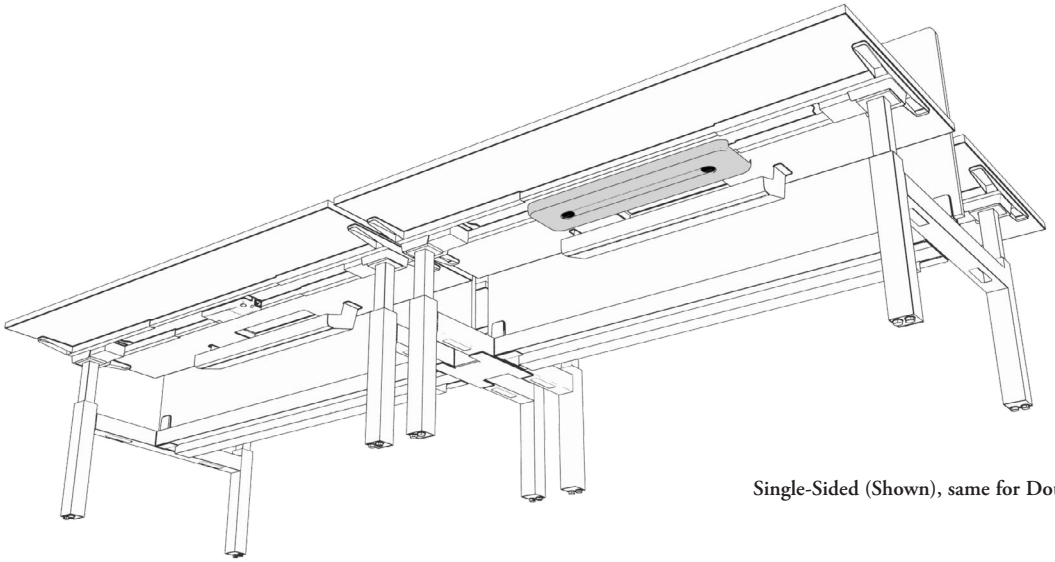

Single-Sided (Shown), same for Double-Sided

Finishes

- Finish Options:
  - Very White
  - Ebony

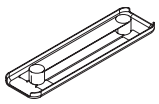

Felt Cable Cover Organizer (EHWBEWY)

wire bridge basics

Wire Bridges are used to pass cables between two height-adjustable bench frames, specifically when there is no cable riser required at the junction.

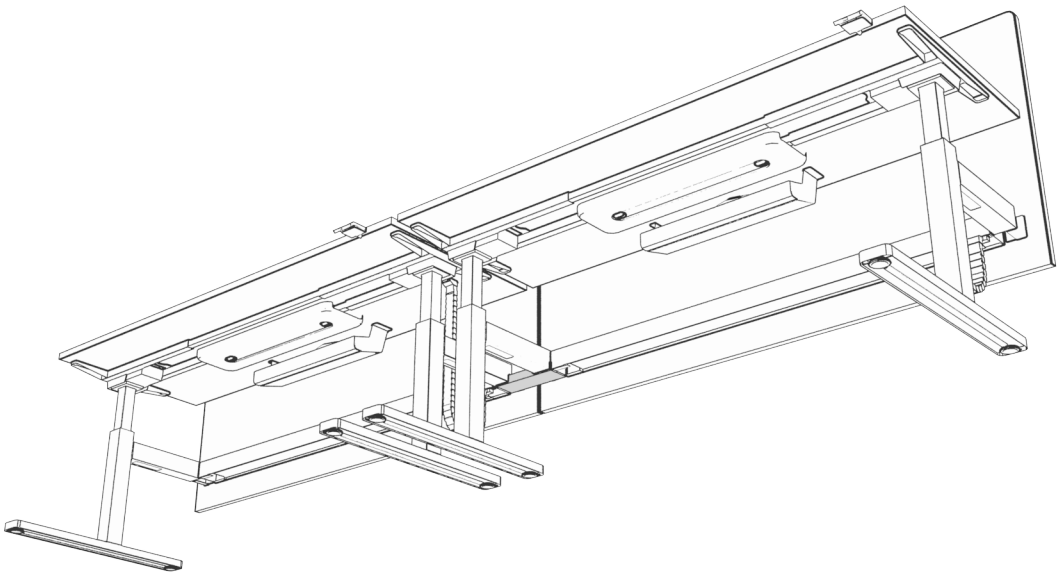

Finishes

- Finish Options:
  - Very White
  - Ebony

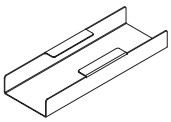

Wire Bridge (EHWBEWB)

wire cover basics

Wire Covers are used to close up the gap where cables enter the medium capacity spine trays whenever full cable enclosure is required.

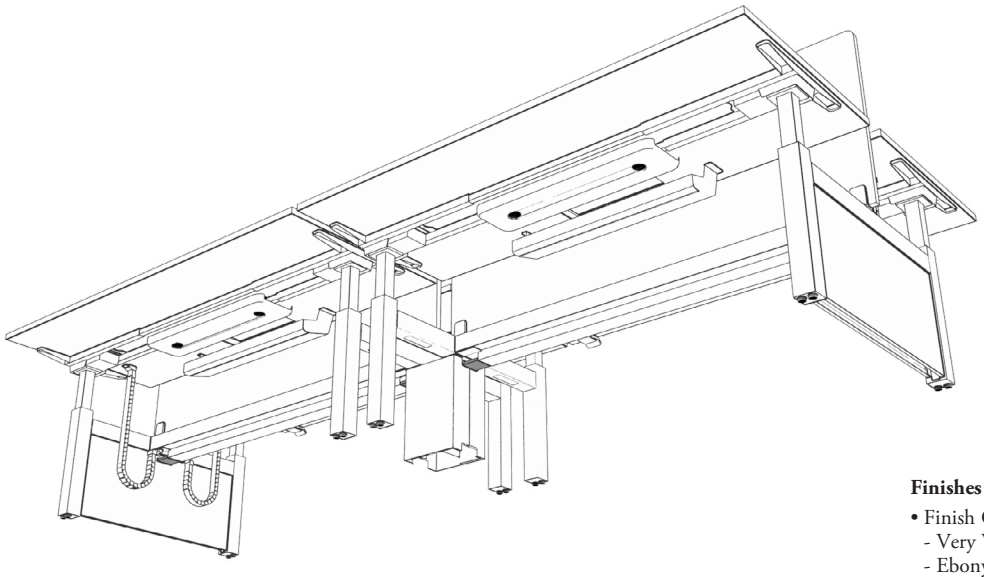

Finishes

- Finish Options:
  - Very White
  - Ebony

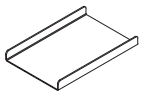

Wire Covers (EHWBEWV)

planning with wire covers

The following should be considered when planning with the wire covers.

Wire covers are mandatory if specifying hard-wired electrics.

double-sided

Wire Covers can be specified in three different types of applications if medium capacity spine trays are specified.

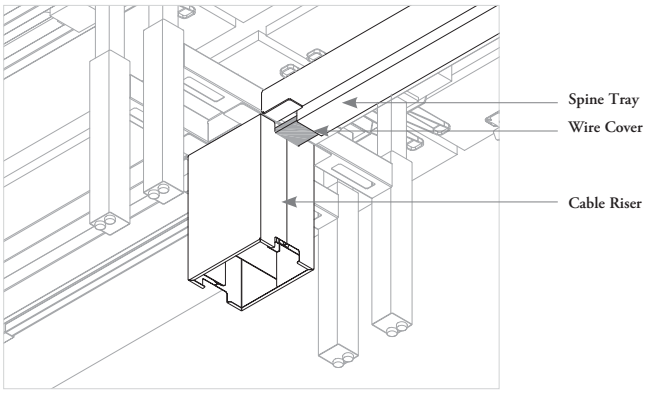

Wire Cover between Spine Tray and Wire Bridge.

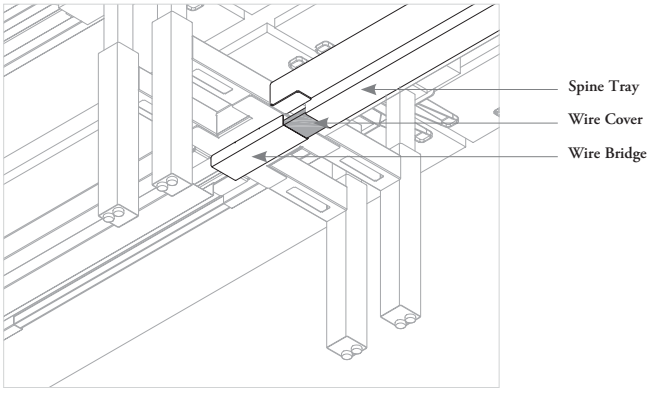

Wire Cover between Spine Tray and End Gable.

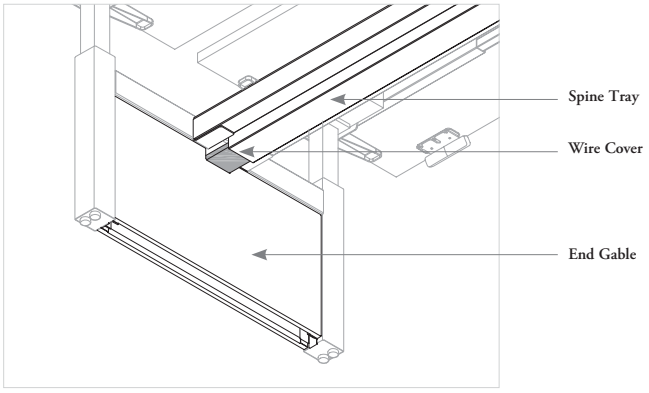

planning with wire covers (continued)

The following should be considered when planning with the wire covers.

single-sided

Wire Covers can be specified in three different types of applications if medium capacity spine trays are specified.

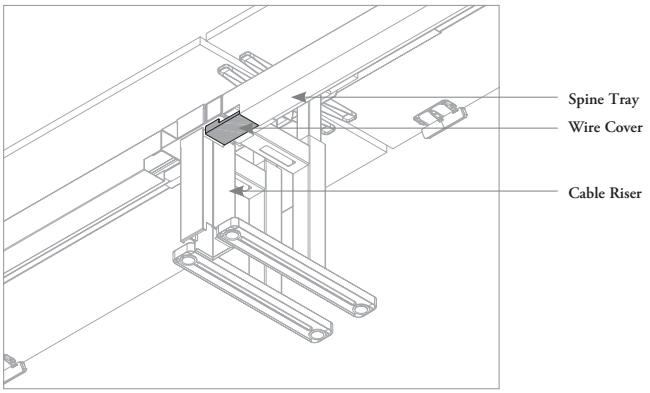

Wire Cover between Spine Tray and Wire Bridge.

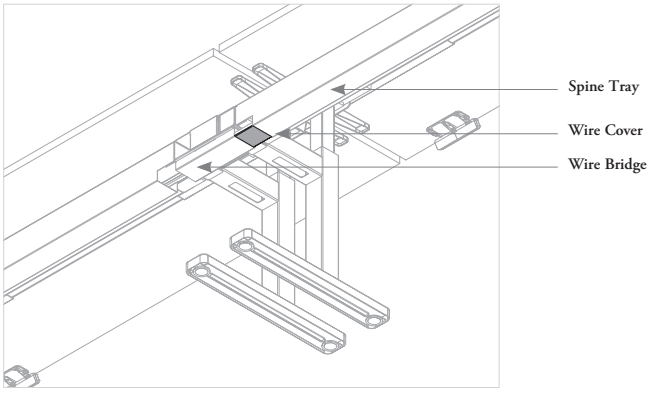

Wire Cover between Spine Tray and End Gable.

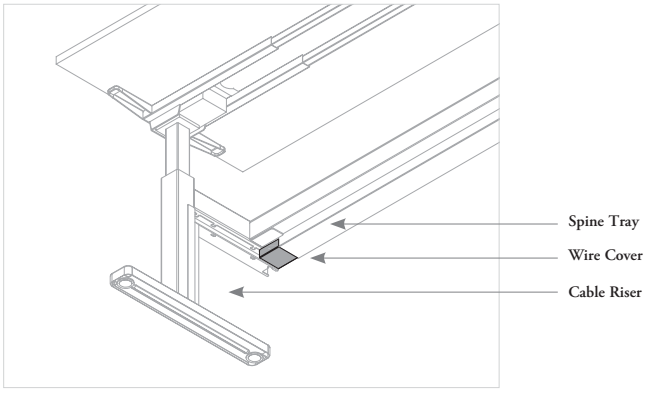

double & single-sided screens overview

There are four types of screens designed to add privacy in double and single-sided height-adjustable bench applications.

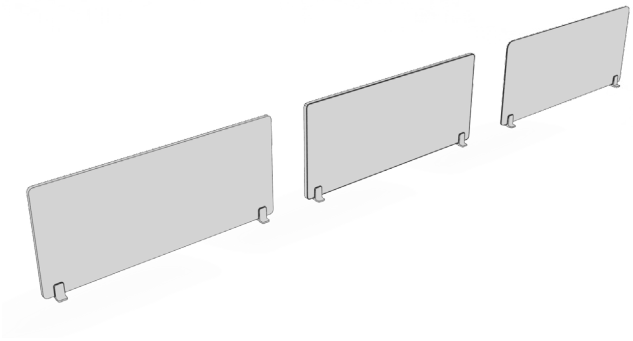

Spine Screens

- Run along the length of the bench
- Centered between worksurfaces
- Attached with brackets that accommodates various thicknesses of screens
- Solid and Beveled options
- Available with or without a gap

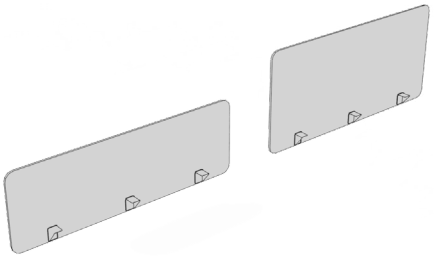

Desk Edge Screens

- Attaches to individual worksurfaces
- Pairs with radius corner worksurface
- Only available with a gap
- Infinity style only

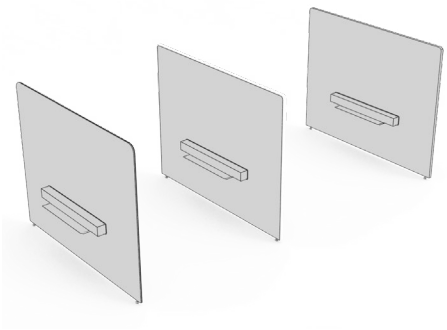

End of Run Screens

- Run lengthwise at the end of a bench for increased privacy
- Attach to the bench frame
- Solid and Beveled options

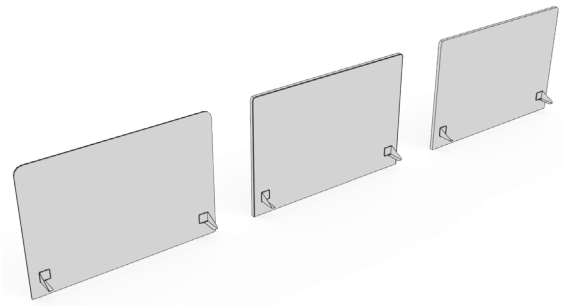

Single-Sided Corridor Screens

- Attach along the back of Single-Sided worksurfaces
- Available in two datum heights
- Solid and Beveled options

double-sided spine screen basics

Double-Sided Spine Screens run along the length of the bench and provide privacy and functionality.

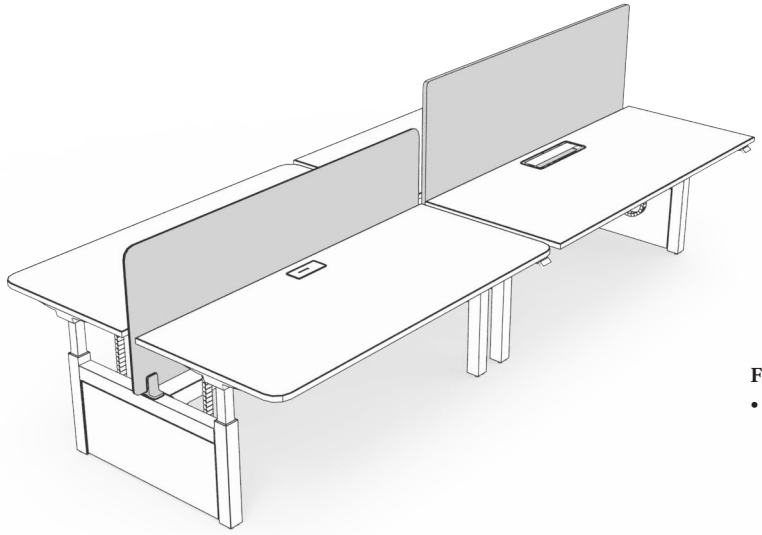

Finishes

- Bracket Finish
  - Very White
  - Ebony

- Gap:
  - Yes
  - No
- Height: 11 dm, 13 dm
- Depth: 12 dm, 14 dm, 15 dm, 16 dm, 18 dm

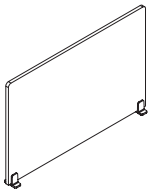

Double-Sided Spine Screen - Beveled Fabric (EHWBCTC)

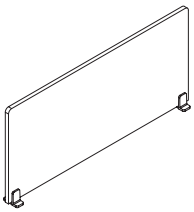

Double-Sided Spine Screen - Solid (EHWBCTS)

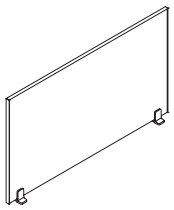

Double-Sided Spine Screen – Framed Fabric (EHWBCTF)

planning with double-sided spine screens

The following should be considered when planning with Double-Sided Spine Screens.

Spine Screens can be specified with a gap or no gap.

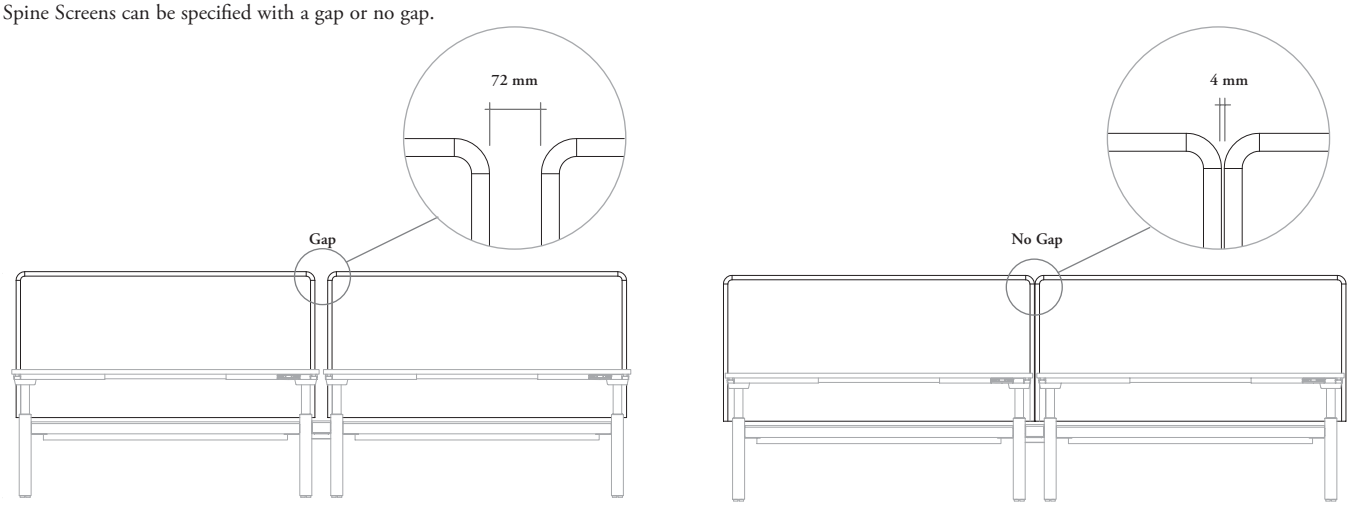

There are two datum heights available:
- 11 dm
- 13 dm

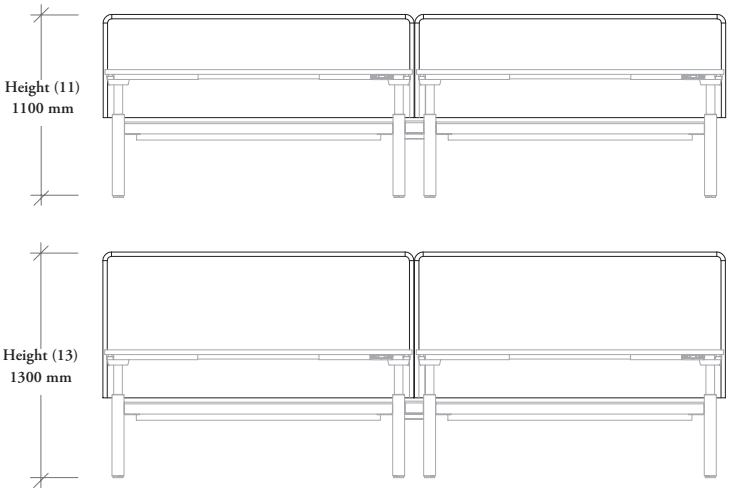

There is a 76 mm gap between worksurfaces which provides a 25 mm pinch gap on each side of the spine.

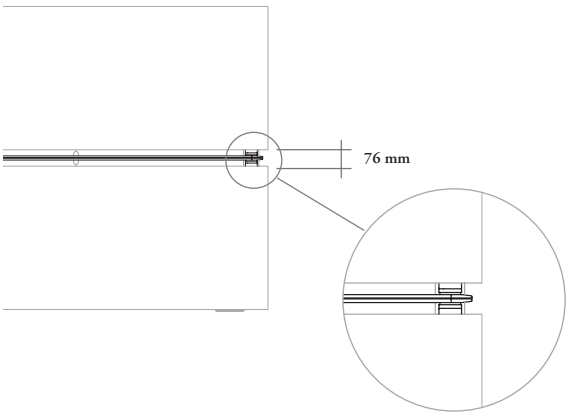

double-sided desk edge screen basics

Double-Sided Desk Edge Screens are offered in one style and are only available in the gap width option.

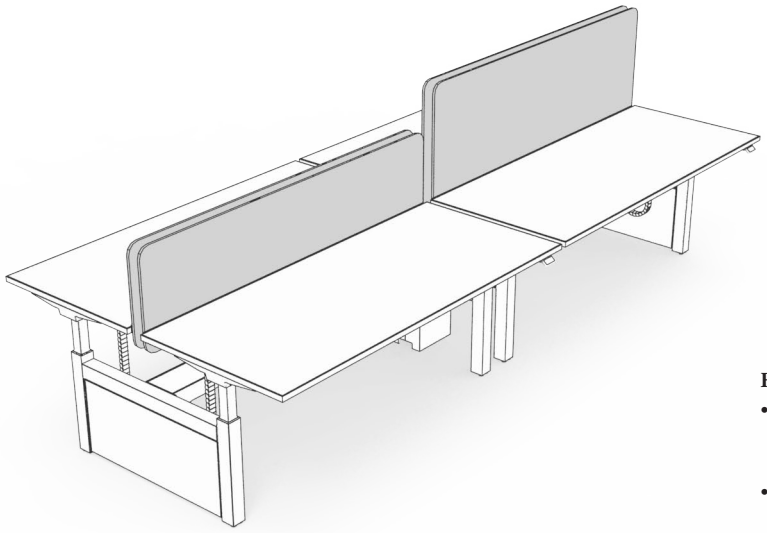

Finishes

- Screen Finishes
  - Panel Fabric
  - Upholstery Fabric
- Bracket Finish
  - Very White
  - Ebony
- Frame Finish
  - Very White
  - Ebony

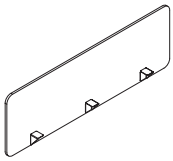

Double-Sided Desk Edge Screen – Infinity (EHWBCDX)

- Height: 11 dm, 13 dm
- Depth: 12 dm, 14 dm, 15 dm, 16 dm, 18 dm

planning with double-sided desk edge screens

The following should be considered when planning with Double-Sided Desk Edge Screens.

There are two datum heights available with Double-Sided Desk Edge Screens:
- 11 dm
- 13 dm

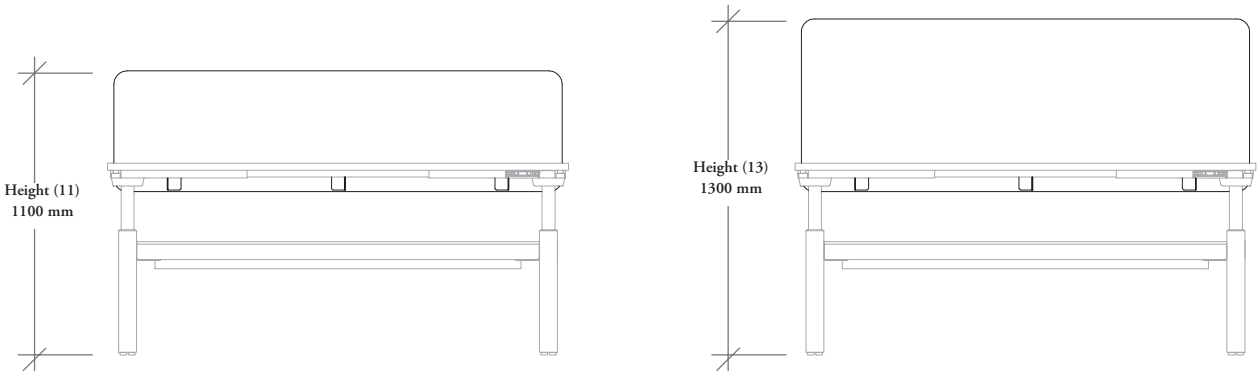

There is a 7.6 mm wire gap on a Double-Sided Bench which will allow for a 25 mm pinch gap when specifying Double-Sided Desk Edge Screens on back to back worksurfaces.

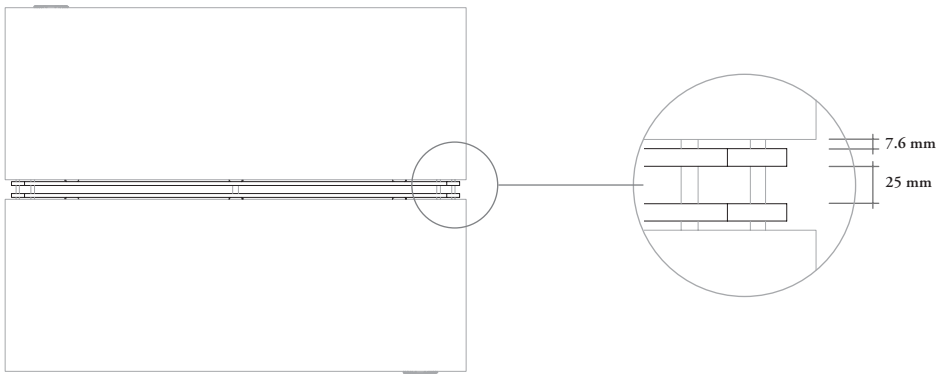

double-sided end of run screen basics

Double-Sided End of Run Screens attach to the frame to provide privacy at the end of the run.

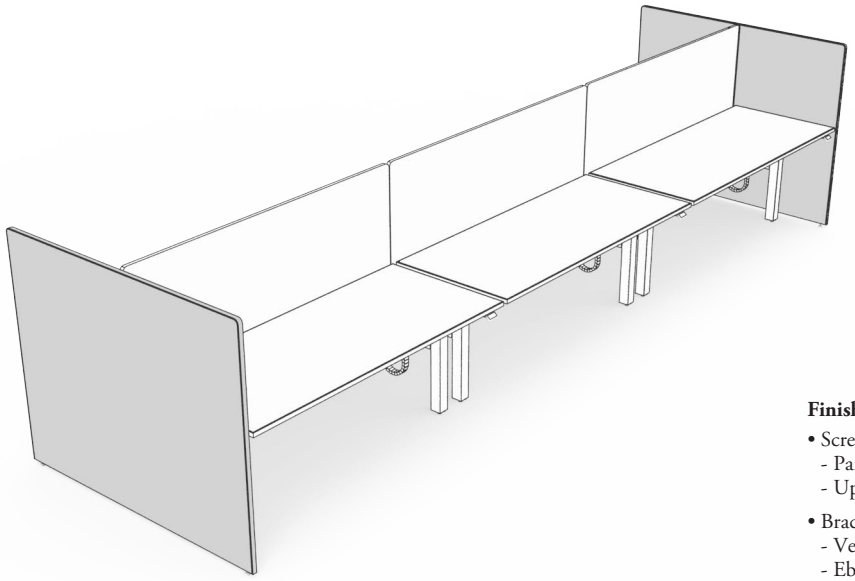

Finishes

- Screen Finishes
  - Panel Fabric
  - Upholstery Fabric
- Bracket Finish
  - Very White
  - Ebony
- Frame Finish
  - Very White
  - Ebony

- Height: 11 dm, 13 dm
- Width: 14 dm, 16 dm

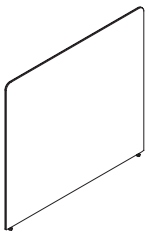

Double-Sided End of Run Screen - Beveled Fabric (EHWBTWC)

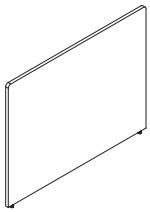

Double-Sided End of Run Screen - Framed Fabric (EHWBTWF)

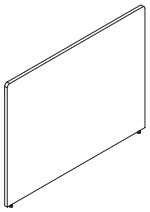

Double-Sided End of Run Screen - Solid (EHWBTWS)

planning with double-sided end of run screens

The following should be considered when planning with Double-Sided End of Run Screens.

There are two datum heights available with Desk Edge Screens:
- 11 dm
- 13 dm

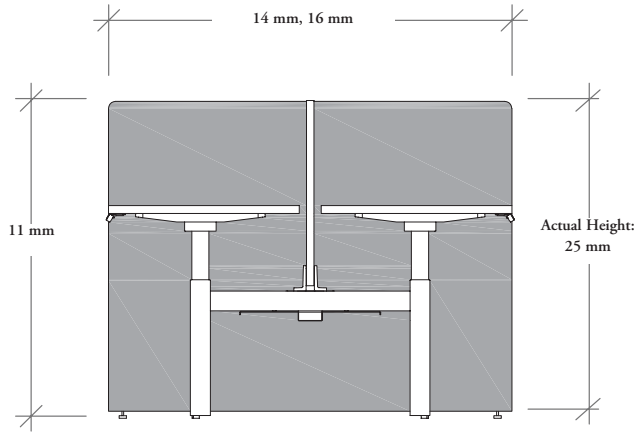

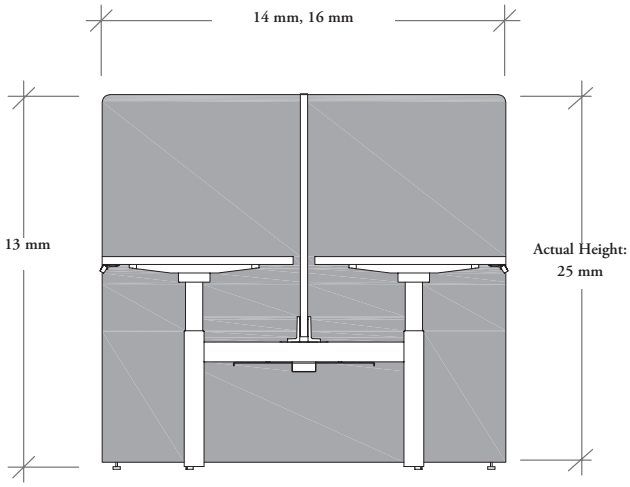

single-sided corridor screen basics

Single-Sided Corridor Screens provide enclosure along the back of single-sided benches in a corridor application.

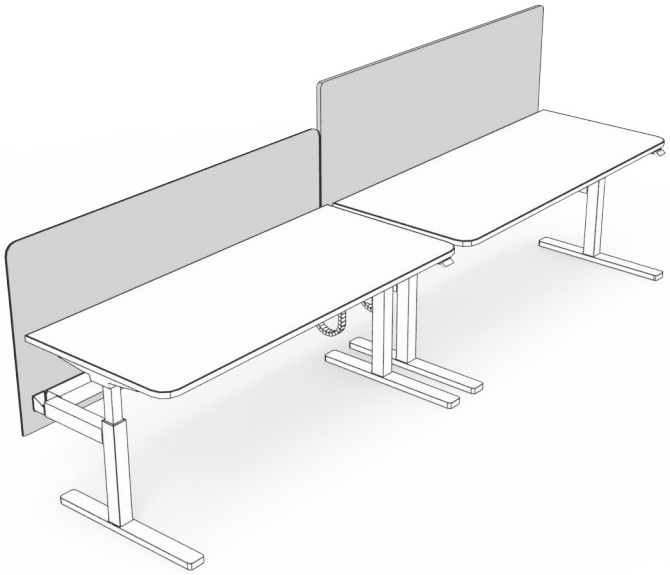

Finishes

- Screen Finishes
  - Panel Fabric
  - Upholstery Fabric
- Bracket Finish
  - Black

- Height:
  - 11 dm, 13 dm
- Width:
  -12 dm, 14 dm, 15 dm, 16 dm, 18 dm

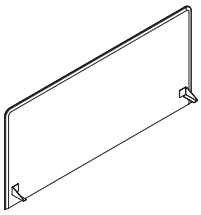

Single-Sided Corridor Screen - Beveled Fabric (EHWBLSC)

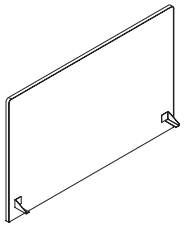

Single-Sided Corridor Screen - Framed Fabric (EHWBLSF)

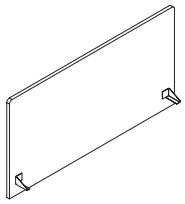

Single-Sided Corridor Screen - Solid (EHWBLSS)

planning with single-sided corridor screens

The following should be considered when planning with Single-Sided Corridor Screens.

There are two different heights when planning with Corridor Screens:
- 11 dm
- 13 dm

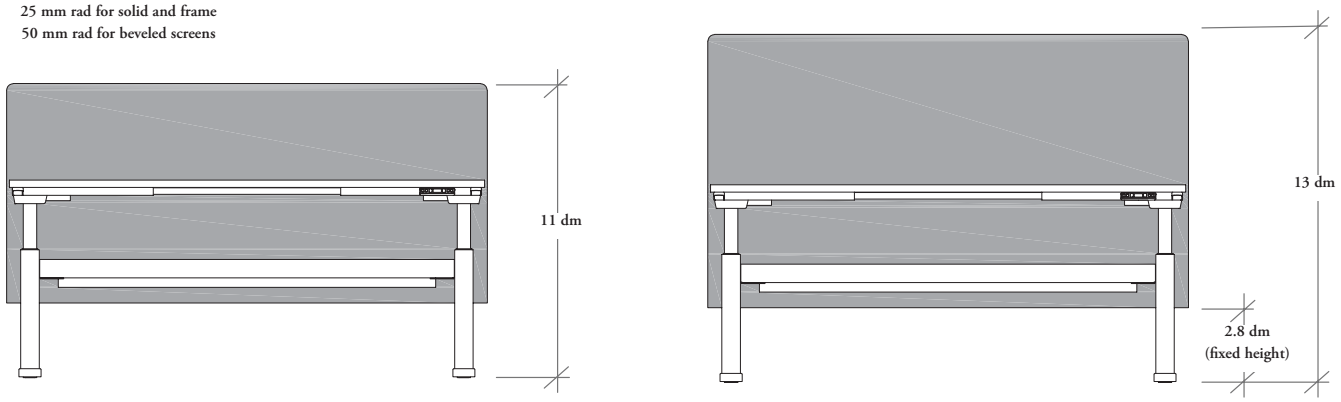

There is a no gap option with Corridor Screens.

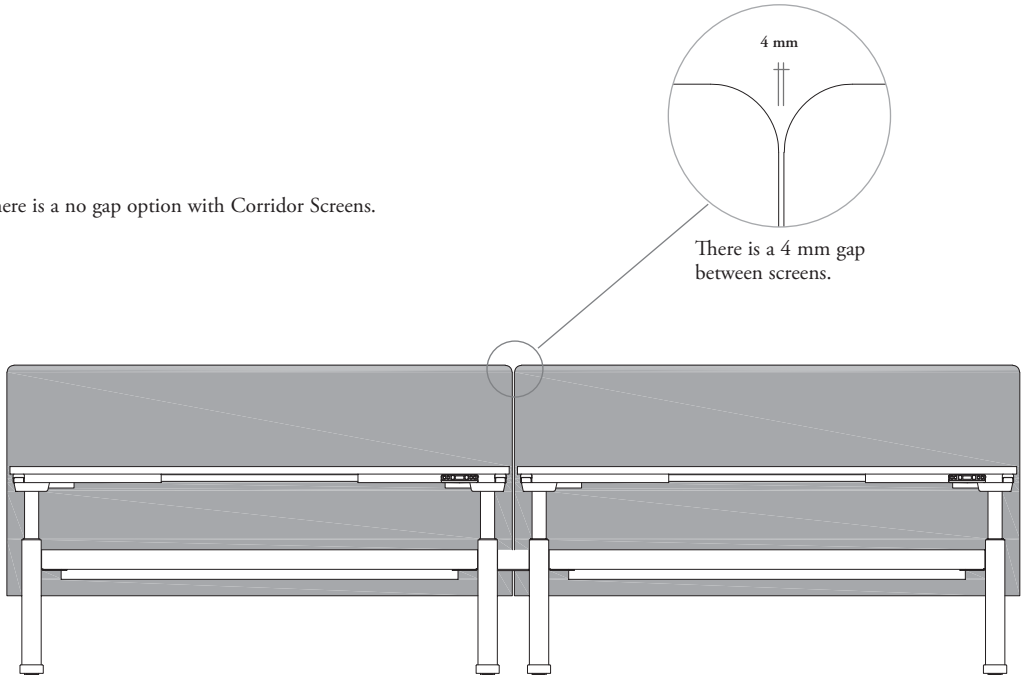

height-adjustable table frame overview

The Height-Adjustable Table promotes healthy postures and is available to specify with a base and option of rectangular worksurfaces or rectangular worksurfaces with with radius corners.

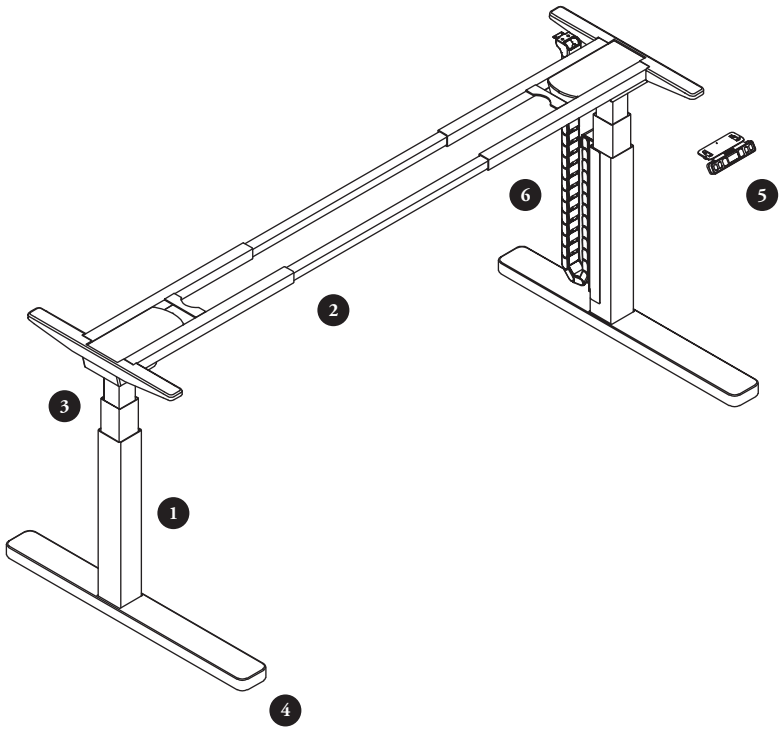

1. hiSpace Leg Column
2. Worksurface Strut
3. Telescopic Top Frame
4. Leveler
5. Digital Switch
6. Vertical Wire Carrier (Optional)

height-adjustable table frame basics

Height-adjustable tables provide a refined aesthetic for use in freestanding or panel environments.

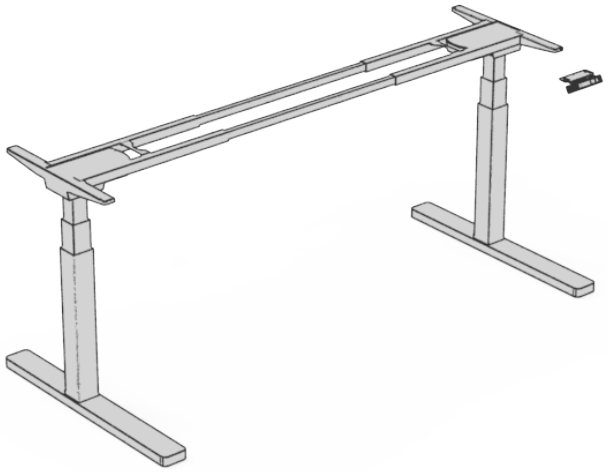

Finishes

- Frame finishes available:
  - Ebony
  - Very White

- Table Base size is determined by the size of the worksurface it is used with
- Width (to work with worksurface width)
  - 12dm, 14dm, 15dm, 16dm, 18dm
- Depth
  - 07dm, 08dm
- Switch:
  - Display with up/down memory
- Base Mechanism
  - Extended Range Electric-Extended Height (620mm - 1270mm)

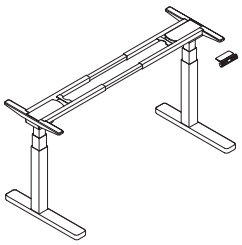

Height-Adjustable Freestanding Table Mechanism (EYWYR)

planning with height-adjustable table frames

The following should be considered when planning with height-adjustable table frames.

height-adjustment ranges

Height-adjustment table frame ranges are 620 - 1270 mm.

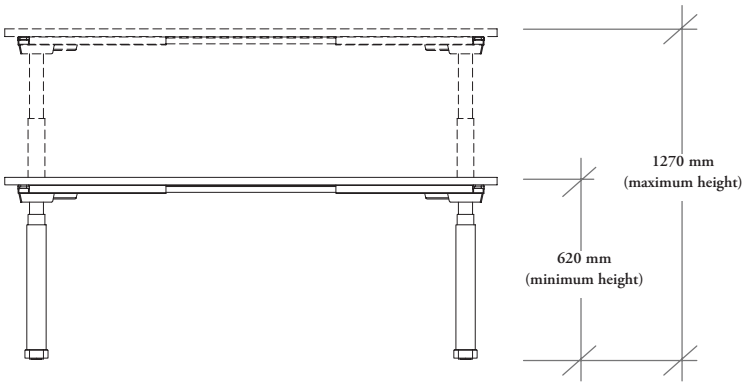

frame depths

Height-adjustment table frame depths are 07 dm and 08 dm.

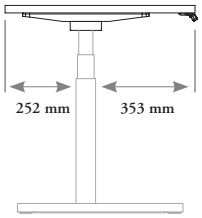

07 dm deep Worksurface

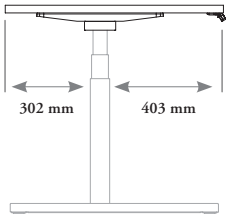

08 dm deep Worksurface

planning with height-adjustable table frames (continued)

frame widths

Height-adjustable bench widths are nominal.

To calculate the user space between the legs of the frame, take the nominal width and - 2.48 dm.

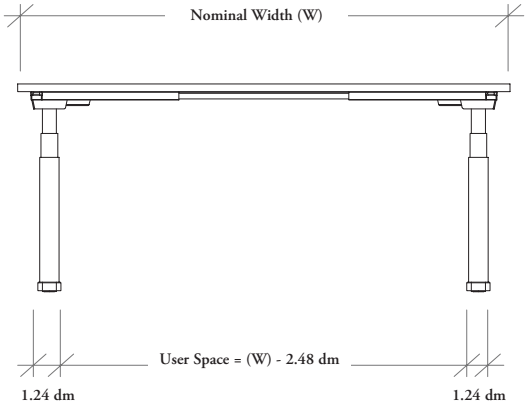

leveling

Height-adjustable tables allow for 80 mm of leveling.

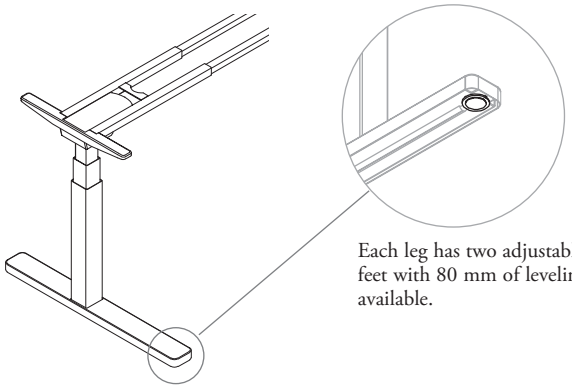

Each leg has two adjustable feet with 80 mm of leveling available.

switches

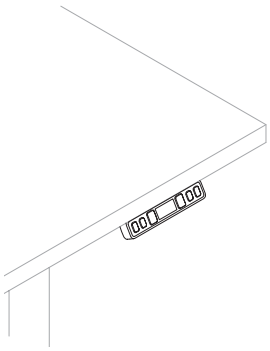

Display with Up/Down Memory (D)

- Basic up/down function
- Display
- Three programmable memory settings
- Error Code Read-Out
- Can be installed on the right or left hand side of the user

height-adjustable table worksurface basics

Rectangular Worksurfaces are available with or without power accessibility and can also accommodate screens.

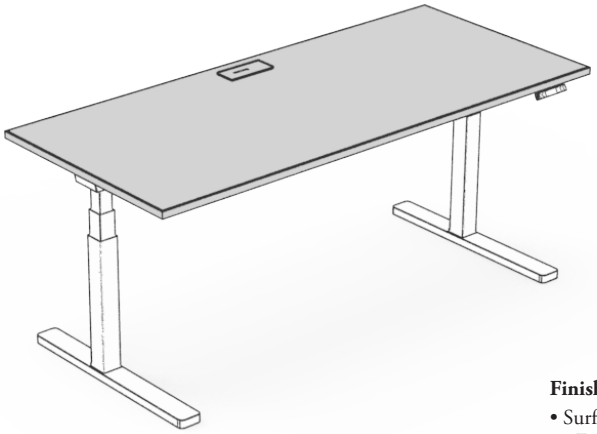

- Depths:
  - 07 dm, 08 dm
- Widths:
  - 12dm, 14dm, 15dm, 16dm, 18dm
- Access Door Cut Out Size:
  - NN (None)
  - 04dm
  - 06dm
- Grommet Options:
  - No Grommet
  - Grommet Centre
  - Grommet Left
  - Grommet Right
  - Both Left and Right

Finishes

- Surface Finishes available:
  - Foundation Laminate
- Edge Banding Finish:
  (Rectangular Worksurface with Radius Corners only)
  - Matching Trim
  - Black Trim
- Grommet Cap Finishes available:
  - Very White
  - Ebony
- Access Door Finish:
  - Metal
  - Accent

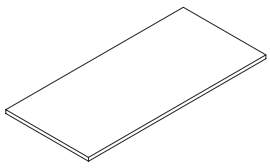

Worldwide Rectangular Worksurface with Radius Corners (EYWWB)

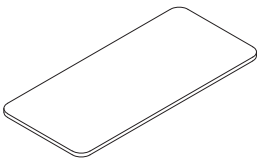

World wide Rectangular Worksurface with Square Corners (EYWWJ)

planning with height-adjustable table worksurfaces

grommets

• Grommet cut out options:
- None
- Centre
- Left
- Right
- Both Left & Right

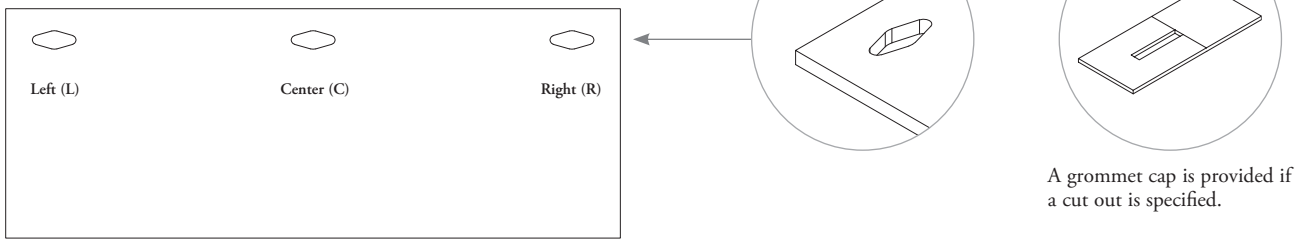

A grommet cap is provided if a cut out is specified.

access doors

• Access door options:
- None
- Centered

• There are two sizes of access doors
- 04 dm
- 06 dm

• When specifying 1200 mm wide worksurface, only the 400 mm Access Door is applicable

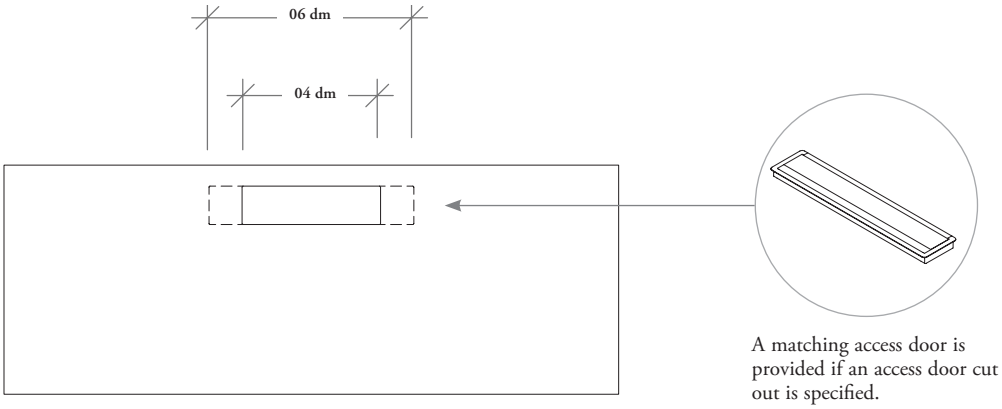

A matching access door is provided if an access door cut out is specified.

under worksurface cable tray for tables basics

Under Worksurface Cable Trays provide housing for an under worksurface power option that is accessible through the access door cut out. The tray also provides a storage area for cables if no plug box is specified.

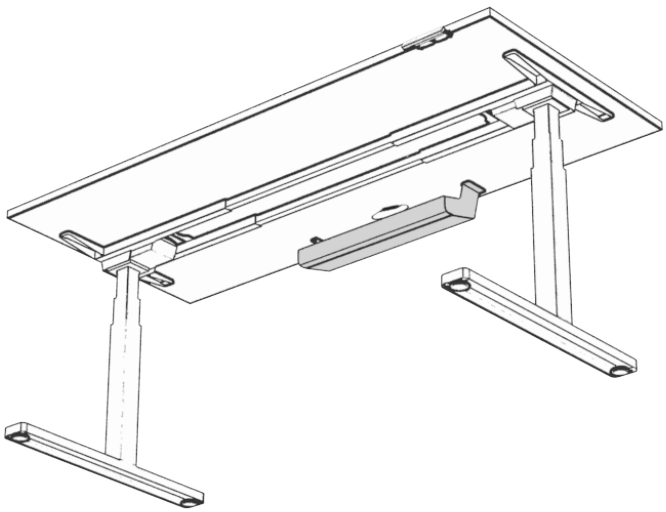

Finishes

- Finish available:
  - Very White
  - Ebony

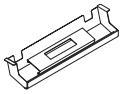

Under Worksurface Cable Tray (EYWUY)

- Size available:
  - 04dm, 06dm
- Plug Mount:
  - None
  - Hard Wire 4-Gang
  - Powerbox M 4-Gang (specified separately)

planning with under worksurface cable trays for tables

The following should be considered when planning with under worksurface cable tray.

- When specifying an access door cut out, you must specify an under worksurface cable tray
- All three types of cable trays will work with both size of access door cut outs (04 dm and 06 dm)
- A 06d m wide Cable Tray is incompatible with 12 dm wide worksurfaces

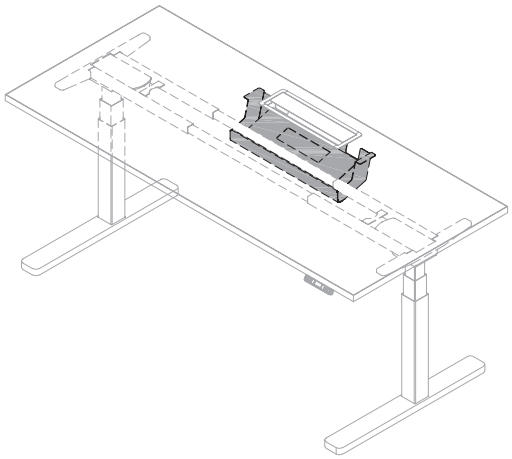

There are three under worksurface cable tray options available:

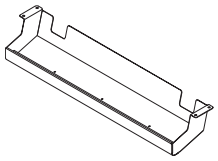

None
If no electrics are specified, the Cable Tray acts as a place to store power cables.

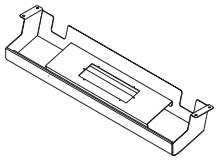

Hardwired 4-Gang
Mounting of this option is for hard wired electrics which must be done by an electrician.

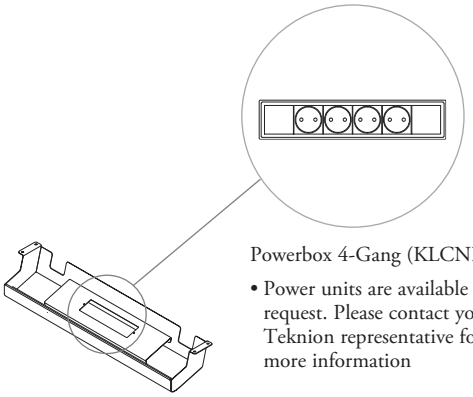

Powerbox 4-Gang
This option includes a mounting plate that will accommodates a Powerbox.

Powerbox 4-Gang (KLCNB4)

- Power units are available upon request. Please contact your Teknion representative for more information

Edge clamp accessories will not be able to be installed along the width of the access door.

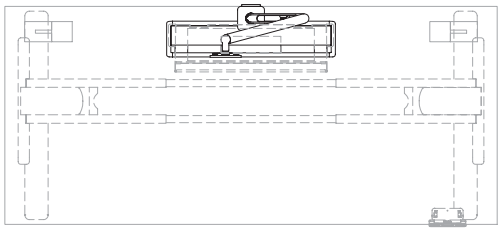

vertical wire carrier for tables basics

Vertical Wire Carrier serve as a raceway for power and data cables to run from power source to worksurface.

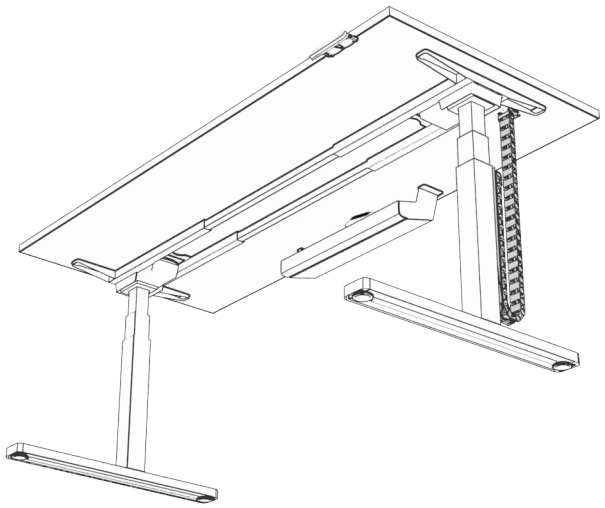

Finishes

- Finish available:
  - Very White
  - Ebony

Vertical Wire Carrier for Freestanding hiSpace (EYWEE)

- Style available:
  - Standard Capacity
  - Perpendicular
- Can be installed on right or left hand of user edge

felt cable cover organizer for tables basics

The Felt Cover Cable Organizer acts to hide the bench's electrics control box and associated wiring.

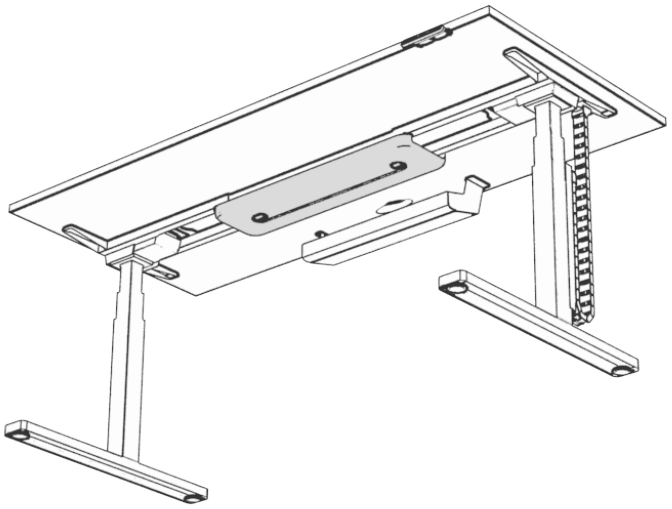

Finishes

- Finish available:
  - Very White
  - Ebony

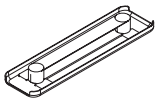

Felt Cable Cover Organizer (EHWBEWY)

modesty panel basics

Modesty Panels provide under worksurface privacy and is available with either a rectangular or curved edge profile.

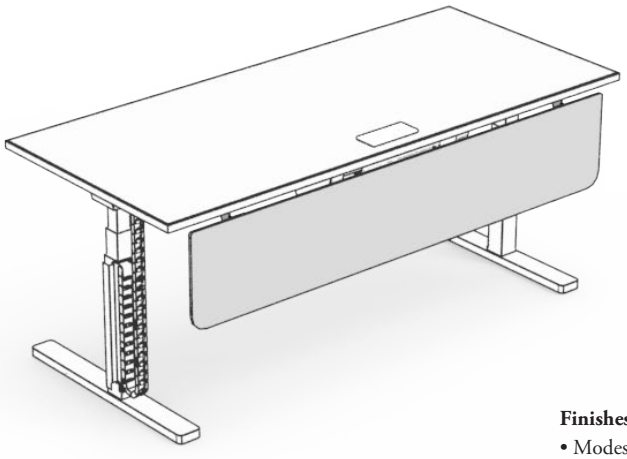

- Modesty Height:
  - 38 dm
- Width:
  - 12dm, 14dm, 15dm, 16dm, 18dm
- Corner Style available:
  - Rectangular
  - Radius

Finishes

- Modesty Panel, Solid Finishes
  - Foundation Laminate
- Modesty Panel, Felt Finishes
  - Pewter
  - Lunar
- Bracket Finish
  - Very White
  - Ebony

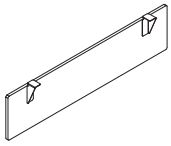

Modesty Panel, Solid (EYWMS)

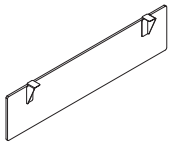

Modesty Panel, Smooth Felt (EYWMF)

planning with modesty panels

The following should be considered with modesty panels.

- Modesty panels are mounted to the underside of the worksurface and have a 20 mm gap which allows for wires to be directed from the worksurface down through a grommet cut out to power source
- Modesty panels are compatible with Under Worksurface Cable Trays (EYWUY)

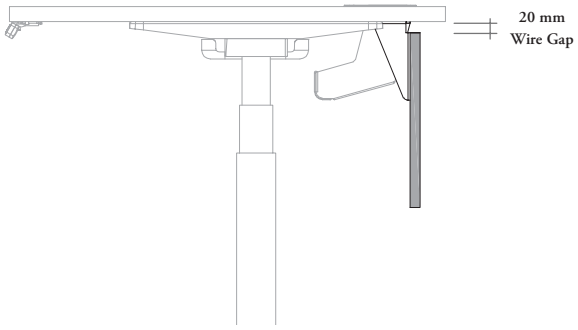

Modesty panels are not compatible with any desk edge mounted accessories.

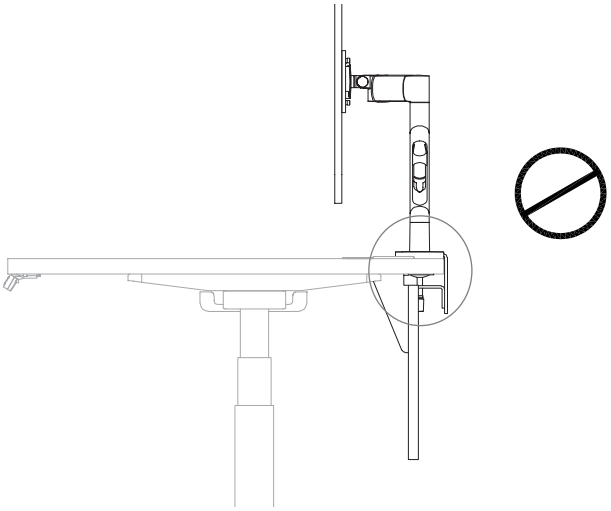

desk edge screen basics

Desk Edge Screens offer the option of a straight or curved profile and are designed to provides privacy along the front edge of a table.

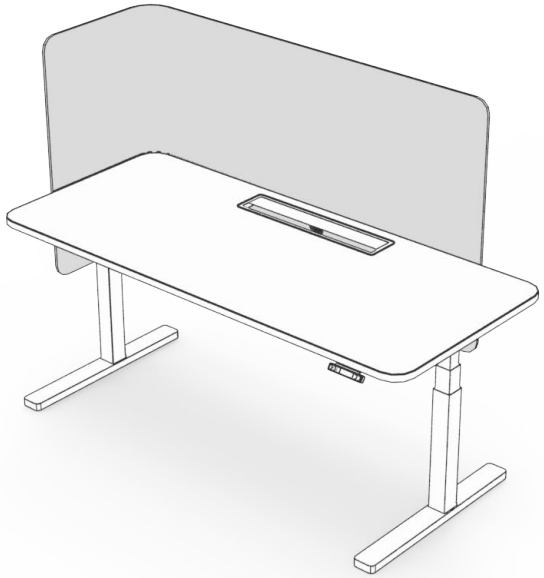

- Modesty Height:
  - 38 dm
- Width:
  - 12dm, 14dm, 15dm, 16dm, 18dm
- Corner Style available:
  - Rectangular
  - Radius

Finishes

- Screen Finishes
  - Panel Fabrics
  - Upholstery Finishes
- Bracket Finish
  - Very White
  - Ebony

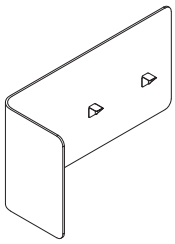

Radius Corner Desk Edge Screen for Freestanding Tables (EYWXC)

- Depth:
  - 20 dm
- Width:
  - 12 dm, 14 dm, 15 dm, 16 dm
- Modesty Height:
  - 38 dm
- Orientation:
  - Right-handed
  - Left-handed

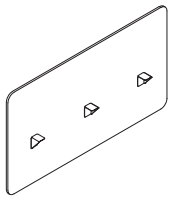

Infinity Desk Edge Screen for Freestanding Table (EYWXD)

- Datum Height:
  - 11 dm, 13 dm
- Width:
  - 12 dm, 14 dm, 15 dm, 16 dm, 18 dm
- Modesty Height:
  - 38 dm

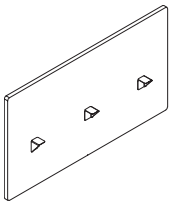

Desk Edge Screen, Framed Fabric (EYWFD)

- Datum Height:
  - 11 dm, 13 dm
- Width:
  - 12 dm, 14 dm, 15 dm, 16 dm, 18 dm
- Modesty Height:
  - 38 dm

planning with desk edge screens

The following should be considered when planning with desk edge screens.

There are two datum heights available with Desk Edge Screens:
- 11 dm
- 13 dm

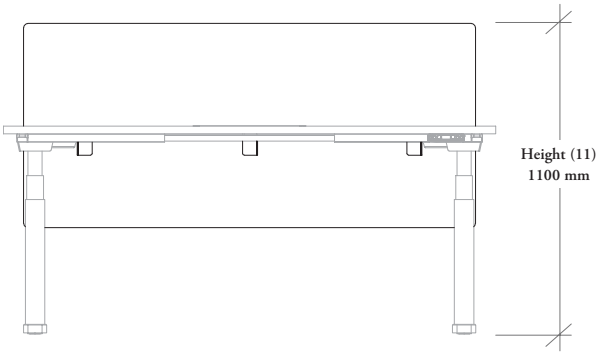

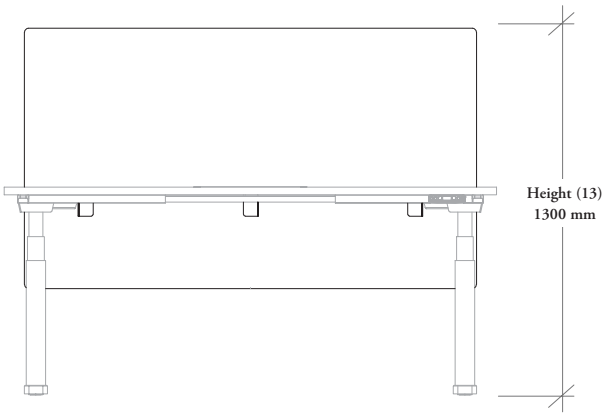

There is a 12.5 mm wire gap between the edge of the work surface and desk edge screens.

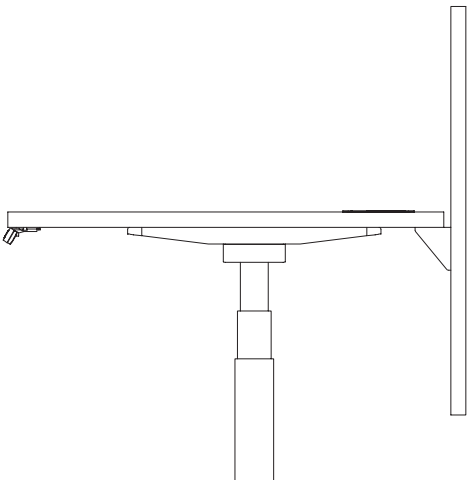

planning with radius corner desk edge screen for freestanding tables

The following should be considered when planning with radius corner desk edge screens for freestanding tables.

There is a 12.5mm wire gap between the Corner Desk Edge Screen and Worksurface.

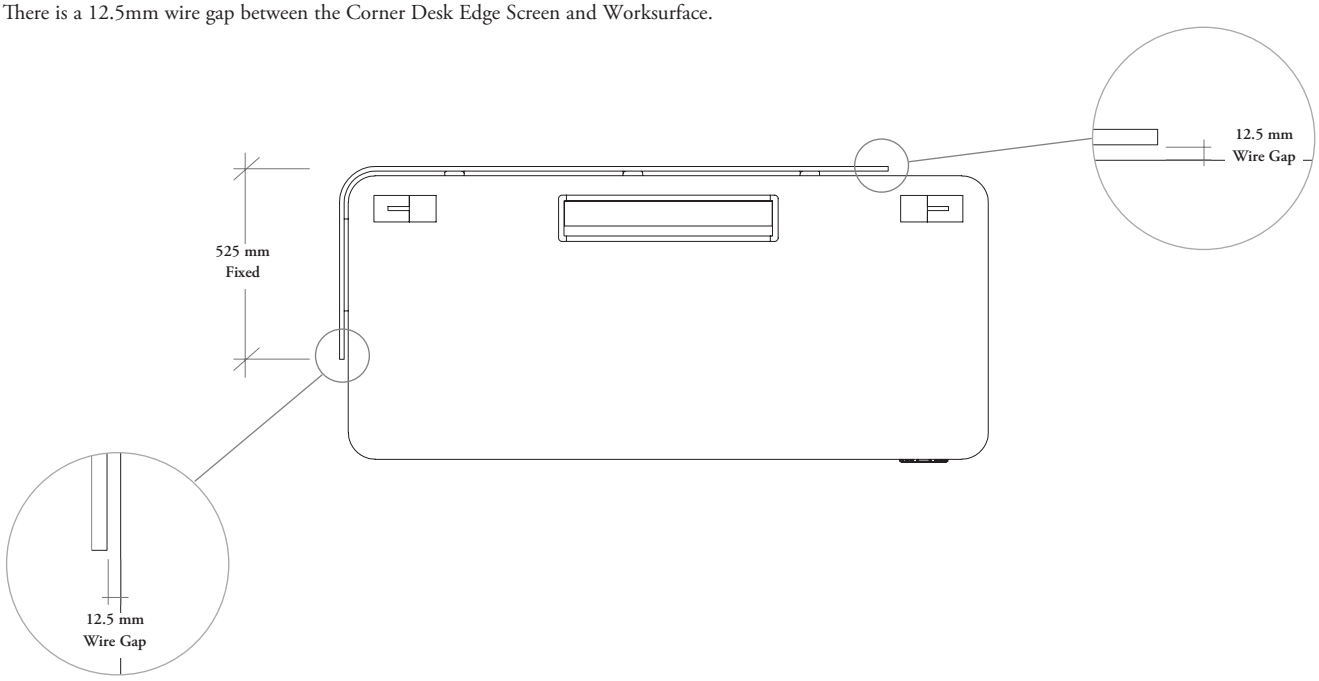

bag drop basics

The Bag Drop offers storage for personal items and work bag storage below the worksurface with both Double and Single-Sided Height-Adjustable Bench planning.

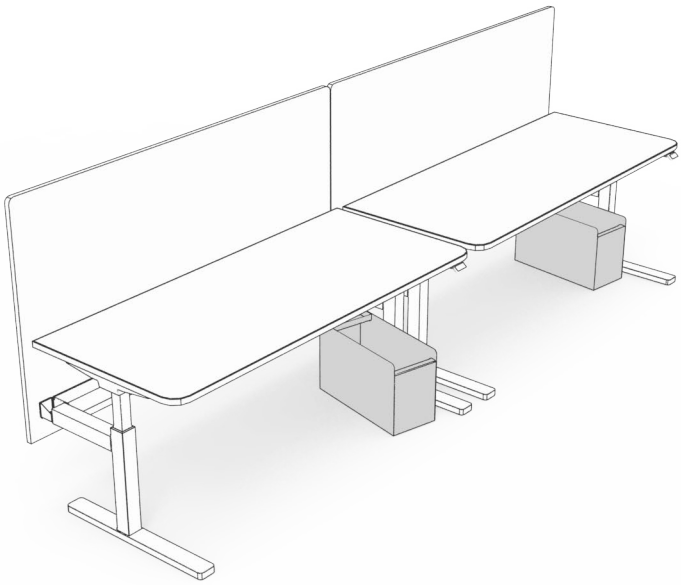

Finishes

- Case Finish options:
  - Very White
  - Ebony
- Front Finish options:
  - Very White
  - Ebony
  - Accent
- Smooth Felt Liner options:
  - Pewter
  - Lunar

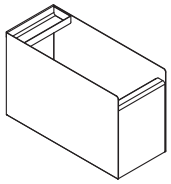

Bag Drop (EHWBAWR)

bag drop finishes

The following outlines the finishes available with the bag drop.

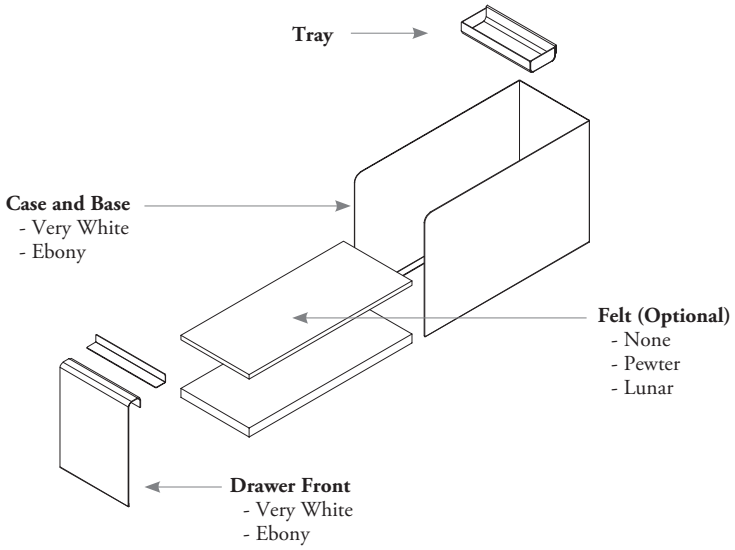

Very White Case

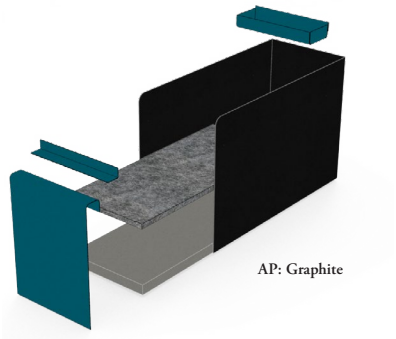

Ebony Case

hanging whiteboard basics

Whiteboard hangs from all screen types in Double and Single-Sided Height-Adjustable Benches.

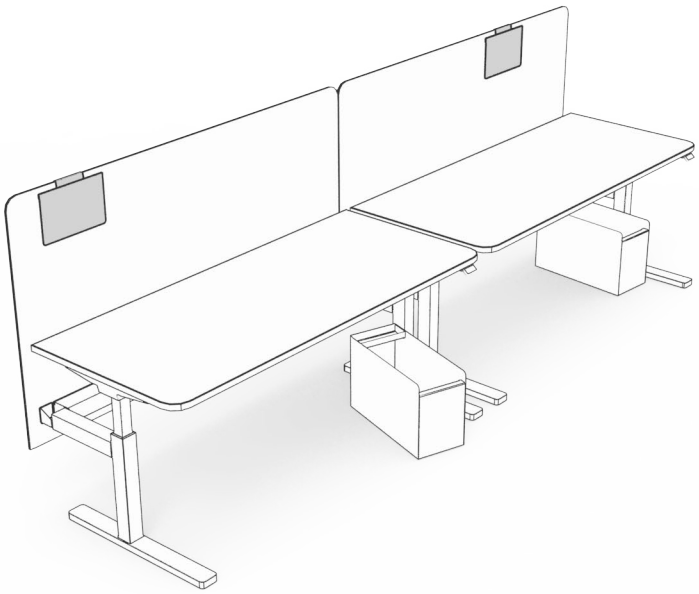

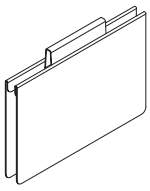

Hanging Whiteboard (EHWBAWW)

- Available in following applications:
  - Single-Sided-Whiteboard
  - Double-Sided Whiteboard
- Screen type available:
  - Curved
  - Solid
  - Infinity

hispace workstation name plate basics

hiSpace Workstation Name Plate can be magnetically attached onto a screen.

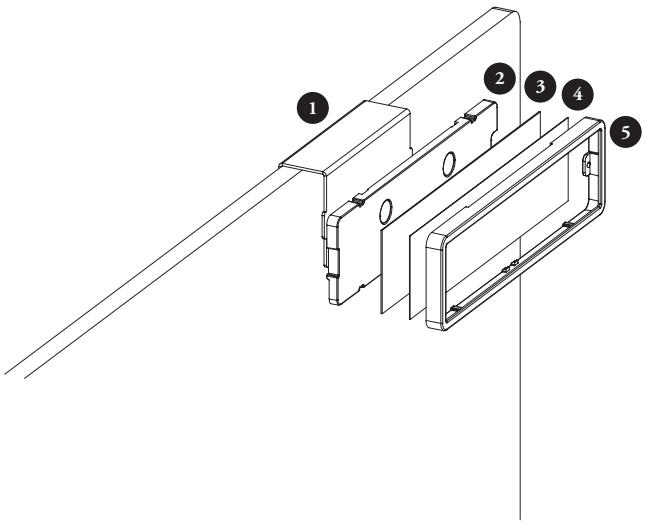

1. Mounting Bracket
2. Molded Magnet Chassis
3. Whiteboard Laminate
4. Transparent Cover Sheet
5. Painted Metal Bezel

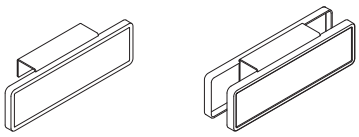

hiSpace Workstation Name Plate (EHWBANP)

Application:
- Hang-on Single-Sided
- Hang-on Double-Sided

Screen Type:
- Solid
- Framed Fabric
- Smooth Felt
- Infinity

planning with hispace workstation name plate

The following should be considered when planning with hiSpace Workstation Name Plate.

It can be used in two different ways:
– Whiteboard: for non-permanent use such as hot-desking or co-working applications
– Custom Template: for more permanent use, customers can also print their own material.

The name plate takes a 190 mm x 50 mm piece of paper or cardstock that can be sealed behind a plastic sheet.

Specify the name plate based on the correct screen application. Single-sided and double-sided options are available based on the screen type. Hang-on Double-Sided is not available for Infinity and Smooth Felt Screens.

Solid

Infinity

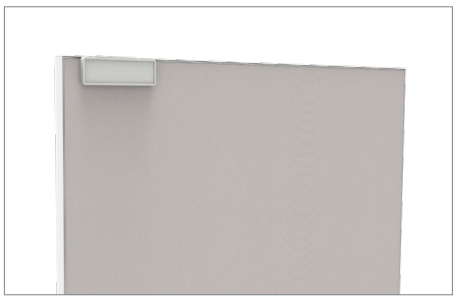

Framed Fabric

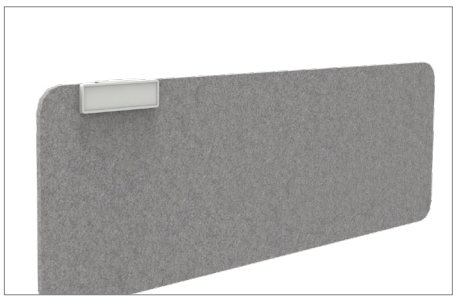

Smooth Felt

hispace
price & product guide

hispace
price & product guide

DOUBLE-SIDED HEIGHT-ADJUSTABLE BENCH 103

SINGLE-SIDED HEIGHT-ADJUSTABLE BENCH 125

120 HEIGHT-ADJUSTABLE BENCH 149

UNIVERSAL COMPONENTS 161

hispace double-sided height-adjustable bench

product map

EHWBFYD Double-Sided Frame

Page 106

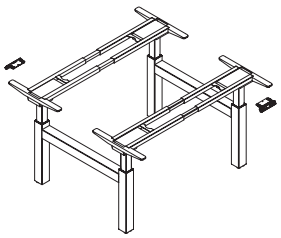

EHWBFBD Double-Sided Base Link

Page 107

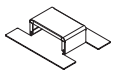

EHWBFTL Double-Sided Spine Tray – Low Capacity

Page 108

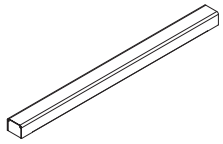

EHWBFTM Double-Sided Spine Tray – Medium Capacity

Page 109

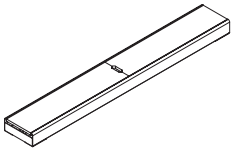

EHWBFTH Double-Sided Spine Tray – High Capacity

Page 110

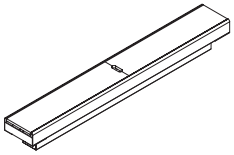

EHWBWBD Double-Sided Rectangular Worksurface with Square Corners

Page 112

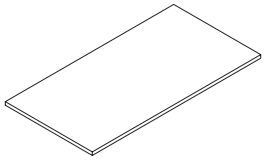

EHWBWJD Double-Sided Rectangular Worksurface with Radius Corners

Page 114

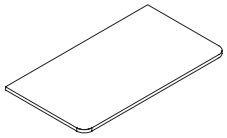

EHWBCDX Double-Sided Desk Edge Screen – Infinity

Page 116

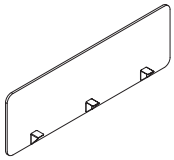

EHWBCTC Double-Sided Spine Screen – Beveled Fabric

Page 117

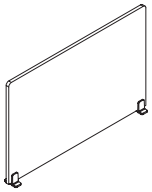

EHWBCTS Double-Sided Spine Screen – Solid

Page 118

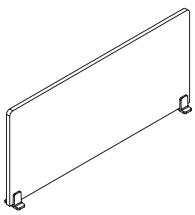

EHWBCTF Double-Sided Spine Screen – Framed Fabric

Page 119

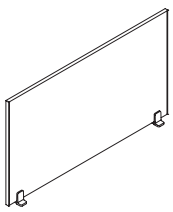

EHWBECD Double-Sided Cable Riser

Page 120

product map

EHWBTWC Double-Sided End of Run Screen – Beveled Fabric

Page 121

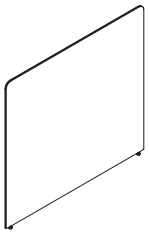

EHWBTWS Double-Sided End of Run Screen – Solid

Page 122

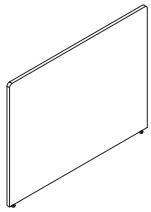

EHWBTWF Double-Sided End of Run Screen – Framed Fabric

Page 123

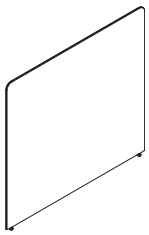

E H W B F Y D
Double-Sided Frame

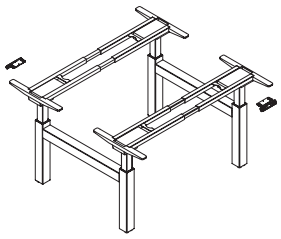

The Double-Sided Frame is used with two Double-Sided Worksurfaces to create a Height-Adjustable or Fixed Height Bench workstation.

WHAT'S INCLUDED
Each frame includes 2 electric height-adjustable mechanisms with switch (height-adjustable only), 4 leg columns (height adjustable or fixed height), 2 leg braces, 2 top frames and 4 levelers.

NOTES
Switch is not included with fixed height option.

Requires two Double-Sided Rectangular Worksurfaces (EHWBWBD/EHWBWJD).

Switches have programmable settings.

All electrical base mechanisms have a 0.2 Watt resting power draw (height-adjustable only).

PRODUCT OPTIONS

Base Mechanism	Depth	Width	Switch	Finish	Country
9Y Extended Range	14, 16	12, 14, 15, 16, 18	**N** None	**83** Very White	**NN** None
2F Fixed Height			**D** Display with Up/ Down Memory	**52** Ebony	**01** UK/Ireland
			A Toggle Display with Memory		**02** Europe

SAMPLE ORDER CODE

EHWBFYD 9Y	16	14	D	83	01

STYLE

Base
Extended Range (9Y)
Fixed Height (2F)

PRICING

3653
2390

The Frame Link is used to join a Double-Sided Frame to another Double-Sided Frame.

WHAT'S INCLUDED
1 frame link, assembly hardware.

EHWBFBD
Double-Sided Base Link

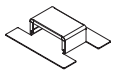

PRODUCT OPTIONS

Finish

83 Very White
52 Ebony

SAMPLE ORDER CODE

EHWBFBD 83

PRICING

89

E H W B F T L
Double-Sided Spine Tray – Low Capacity

The Double-Sided Spine Tray – Low Capacity carries cables across workstations.

WHAT'S INCLUDED
1 spine tray with bottom cover and mounting hardware.

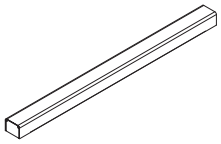

PRODUCT OPTIONS

Width	Spine Tray Finish
12, 14, 15, 16, 18	**83** Very White **52** Ebony

SAMPLE ORDER CODE

EHWBFTL 12	83

DIMENSIONS CODE	PRICING
W	
12	234
14	240
15	244
16	250
18	262

The Double-Sided Spine Tray – Medium Capacity carries cables across workstations and is used to support the power bar.

WHAT'S INCLUDED
1 spine tray with felt cover and mounting hardware.

EHWBFTM
Double-Sided Spine Tray – Medium Capacity

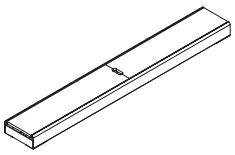

PRODUCT OPTIONS

Width	Spine Tray Top Cover	Spine Tray Finish	Spine Tray Cover Finish
12, 14, 15, 16, 18	**S** Smooth Felt	**83** Very White **52** Ebony	**R5** Pewter **R6** Lunar

SAMPLE ORDER CODE

EHWBFTM 12	**S**	**83**	**R5**

DIMENSIONS CODE	PRICING
W	
12	284
14	301
15	309
16	316
18	333

E H W B F T H

Double-Sided Spine Tray – High Capacity

The Double-Sided Spine Tray – High Capacity carries cables across workstations and is used to support the power bar.

WHAT'S INCLUDED

1 spine tray with felt cover and mounting hardware.

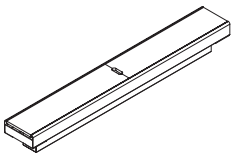

PRODUCT OPTIONS

Width	Spine Tray Top Cover	Spine Tray Finish	Spine Tray Cover Finish
12, 14, 15, 16, 18	**S** Smooth Felt	**83** Very White **52** Ebony	**R5** Pewter **R6** Lunar

SAMPLE ORDER CODE

EHWBFTH 12	**S**	**83**	**R5**

DIMENSIONS CODE	PRICING
W	
12	296
14	313
15	323
16	331
18	347

E H W B W B D

Double-Sided Rectangular Worksurface with Square Corners

The Double-Sided Rectangular Worksurface with Square Corners is used with the Double-Sided Frame.

WHAT'S INCLUDED
1 worksurface.

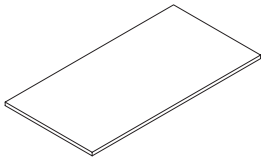

PRODUCT OPTIONS

Depth	Width	Cut Out	Grommet
07, 08	12, 14, 15, 16, 18	NN, 04, 06	**N** No Grommet **C** Grommet Center **L** Grommet Left **R** Grommet Right **B** Both Left and Right

SAMPLE ORDER CODE

EHWBWBD 07	**14**	**04**	**C**

PRODUCT OPTIONS CONTINUED

Surface Finish	Edge Trim Style	Grommet Finish	Access Door Finish
WT Walnut	**6** Straight Trim	**83** Very White	**83** Very White
OK Oak		**52** Ebony	**52** Ebony
LW Light Walnut			Accent
MP Maple			
WH White			
SW Snow White			
LG Light Grey			
BH Beech			

SAMPLE ORDER CODE CONTINUED

OK	**6**	**83**	**83**

See pricing in the following page.

E H W B W B D

Double-Sided Rectangular Worksurface with Square Corners (Continued)

DIMENSIONS CODE		PRICING		
		NONE (NN) CUT OUT		
D	W	NO (N) GROMMET	CENTER (C), LEFT (L), RIGHT (R) GROMMET	BOTH (B) GROMMET
07	12	477	544	611
07	14	494	561	627
07	15	506	573	639
07	16	516	583	649
07	18	535	602	668
08	12	477	544	611
08	14	494	561	627
08	15	516	583	649
08	16	542	608	675
08	18	557	624	690
		400 MM (04) CUT OUT		
D	W	NO (N) GROMMET	LEFT (L), RIGHT (R) GROMMET	BOTH (B) GROMMET
07	12	619	686	753
07	14	636	703	769
07	15	648	715	781
07	16	658	725	791
07	18	677	744	810
08	12	619	686	753
08	14	636	703	769
08	15	658	725	791
08	16	684	750	817
08	18	699	766	833
		600 MM (06) CUT OUT		
D	W	NO (N) GROMMET	LEFT (L), RIGHT (R) GROMMET	BOTH (B) GROMMET
07	14	649	716	783
07	15	662	728	795
07	16	672	738	805
07	18	690	757	824
08	14	649	716	783
08	15	672	738	805
08	16	697	764	830
08	18	713	779	846

E H W B W J D

Double-Sided Rectangular Worksurface with Radius Corners

The Double-Sided Rectangular Worksurface with Radius Corners is used with the Double-Sided Frame.

WHAT'S INCLUDED
1 worksurface.

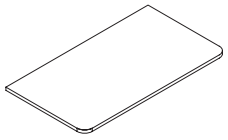

PRODUCT OPTIONS

Depth	Width	Cut Out	Grommet
07, 08	12, 14, 15, 16, 18	NN, 04, 06	**N** No Grommet **C** Grommet Center **L** Grommet Left **R** Grommet Right **B** Both Left and Right

SAMPLE ORDER CODE

EHWBWJD 07	**14**	**04**	**C**

PRODUCT OPTIONS CONTINUED

Surface Finish	Edge Trim Style	Edge Bend Finish	Grommet Finish	Access Door Finish
WT Walnut	**6** Straight Trim	**1** Matching	**83** Very White	**83** Very White
OK Oak		**2** Black	**52** Ebony	**52** Ebony
LW Light Walnut				Accent
MP Maple				
WH White				
SW Snow White				
LG Light Grey				
BH Beech				

SAMPLE ORDER CODE CONTINUED

YQ	**6**	**1**	**83**	**83**

See pricing in the following page.

E H W B W J D

Double-Sided Rectangular Worksurface with Radius Corners (Continued)

DIMENSIONS CODE		PRICING		
		NONE (NN) CUT OUT		
D	W	NO (N) GROMMET	CENTER (C), LEFT (L), RIGHT (R) GROMMET	BOTH (B) GROMMET
07	12	477	544	611
07	14	494	561	627
07	15	506	573	639
07	16	516	583	649
07	18	535	602	668
08	12	477	544	611
08	14	494	561	627
08	15	516	583	649
08	16	542	608	675
08	18	557	624	690
		400 MM (04) CUT OUT		
D	W	NO (N) GROMMET	LEFT (L), RIGHT (R) GROMMET	BOTH (B) GROMMET
07	12	619	686	753
07	14	636	703	769
07	15	648	715	781
07	16	658	725	791
07	18	677	744	810
08	12	619	686	753
08	14	636	703	769
08	15	658	725	791
08	16	684	750	817
08	18	699	766	833
		600 MM (06) CUT OUT		
D	W	NO (N) GROMMET	LEFT (L), RIGHT (R) GROMMET	BOTH (B) GROMMET
07	14	649	716	783
07	15	662	728	795
07	16	672	738	805
07	18	690	757	824
08	14	649	716	783
08	15	672	738	805
08	16	697	764	830
08	18	713	779	846

E H W B C D X

Double-Sided Desk Edge Screen – Infinity

The Double-Sided Desk Edge Screen – Infinity attaches to the worksurface and provides casual privacy and space division.

WHAT'S INCLUDED
1 screen with mounting bracket and hardware.

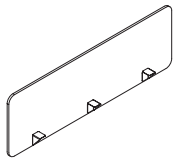

PRODUCT OPTIONS

Height	Width	Screen Finish	Bracket Finish
11, 13	12, 14, 15, 16, 18	Panel Fabric Upholstery Fabric	**83** Very White **52** Ebony

SAMPLE ORDER CODE

EHWBCDX 13	**12**	**B203**	**83**

DIMENSIONS CODE

H	W
11	12
11	14
11	15
11	16
11	18
13	12
13	14
13	15
13	16
13	18

PRICING

Fabric A/COM	Gr. 1	Gr. 2	Gr. 3	Gr.5	Upholstery COM	Gr. 1	Gr. 2	Gr. 3	Gr. 4
1453	1476	1507	1520	1537	1476	1476	1523	1538	1562
1465	1490	1523	1535	1555	1490	1490	1541	1558	1583
1486	1513	1552	1566	1588	1513	1513	1572	1591	1621
1497	1528	1570	1585	1610	1528	1528	1591	1613	1644
1521	1556	1603	1621	1648	1556	1556	1626	1649	1684
1521	1554	1601	1617	1644	1554	1554	1624	1647	1683
1536	1575	1626	1645	1676	1575	1575	1652	1676	1714
1567	1611	1668	1691	1725	1611	1611	1698	1727	1770
1585	1632	1694	1717	1755	1632	1632	1725	1758	1805
1621	1673	1743	1768	1810	1673	1673	1777	1813	1865

The Double-Sided Spine Screen – Beveled Fabric attaches to the bench frame and provides casual privacy and space division.

WHAT'S INCLUDED
1 screen with mounting bracket and hardware.

EHWBCTC
Double-Sided Spine Screen – Beveled Fabric

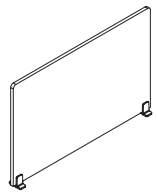

PRODUCT OPTIONS

Gap	Height	Depth	Screen Finish	Bracket Finish
Y Yes	11, 13	12, 14, 15, 16, 18	Panel Fabric	**83** Very White
N No				**52** Ebony

SAMPLE ORDER CODE

EHWBCTC Y	13	12	YB004	83

DIMENSIONS CODE

H	W
11	12
11	14
11	15
11	16
11	18
13	12
13	14
13	15
13	16
13	18

PRICING

Fabric COM	Gr. 1	Gr. 2
882	915	958
989	1026	1072
1046	1084	1139
1072	1116	1173
1137	1185	1251
1132	1199	1284
1381	1451	1544
1459	1541	1647
1512	1598	1715
1613	1709	1839

E H W B C T S
Double-Sided Spine Screen – Solid

The Double-Sided Spine Screen – Solid attaches to the bench frame and provides casual privacy and space division.

WHAT'S INCLUDED
1 screen with mounting bracket and hardware.

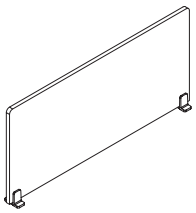

PRODUCT OPTIONS

Gap	Height	Depth	Screen Finish	Edge Trim Style	Bracket Finish
Y Yes	11, 13	12, 14, 15, 16, 18	**WT** Walnut	**6** Straight Trim	**83** Very White
N No			**OK** Oak		**52** Ebony
			LW Light Walnut		
			MP Maple		
			WH White		
			SW Snow White		
			LG Light Grey		
			BH Beech		

SAMPLE ORDER CODE

EHWBCTS Y	13	12	WT	6	83

DIMENSIONS CODE		PRICING
H	W	
11	12	557
11	14	588
11	15	627
11	16	662
11	18	733
13	12	653
13	14	733
13	15	780
13	16	825
13	18	917

The Double-Sided Spine Screen – Framed Fabric attaches to the bench frame and provides casual privacy and space division.

WHAT'S INCLUDED
1 screen with mounting bracket and hardware.

EHWBCTF
Double-Sided Spine Screen – Framed Fabric

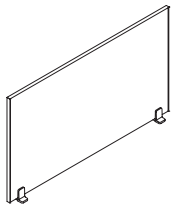

PRODUCT OPTIONS

Gap	Height	Width	Screen Finish	Bracket Finish	Frame Finish
Y Yes	11, 13	12, 14, 15, 16, 18	Panel Fabric	**83** Very White	**83** Very White
N No				**52** Ebony	**52** Ebony

SAMPLE ORDER CODE

EHWBCTF Y	**13**	**12**	**YB004**	**83**	**52**

DIMENSIONS CODE

H	W
11	12
11	14
11	15
11	16
11	18
13	12
13	14
13	15
13	16
13	18

PRICING

Fabric COM	Gr. 1	Gr. 2
639	639	654
651	651	668
705	705	725
719	719	739
766	766	791
842	842	873
866	866	900
937	937	975
963	963	1004
1048	1048	1094

E H W B E C D
Double-Sided Cable Riser

The Double-Sided Cable Riser is used to route power and data cables into the workstation from the floor.

WHAT'S INCLUDED
1 cable riser with mounting hardware.

NOTES
Able to support Power Bar 3-Gang.

PRODUCT OPTIONS

Plug Mount	Cover Finish
3 Powerbox 3-Gang (two power, one blanking)	**83** Very White **52** Ebony

SAMPLE ORDER CODE

EHWBECD 2	**83**

PRICING

290

EHWBTWC
Double-Sided End of Run Screen – Beveled Fabric

The Double-Sided End of Run Screen – Beveled Fabric mounts directly to the bench frame structure to create a physical separation between the bench and the corridor in a double-sided bench application.

WHAT'S INCLUDED
1 screen with mounting bracket and hardware.

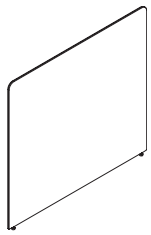

PRODUCT OPTIONS

Height	Depth	Screen Finish	Bracket Finish
11, 13	14, 16	Panel Fabrics	**83** Very White **52** Ebony

SAMPLE ORDER CODE

EHWBTWC 13	**14**	**YB004**	**83**

DIMENSIONS CODE

H	W
11	14
11	16
13	14
13	16

PRICING

Fabric COM	Gr. 1	Gr. 2
1668	1750	1857
1878	1970	2092
1911	1991	2100
2155	2246	2370

E H W B T W S

Double-Sided End of Run Screen – Solid

The Double-Sided End of Run Screen – Solid mounts directly to the bench frame structure to create a physical separation between the bench and the corridor in a double-sided bench application.

WHAT'S INCLUDED
1 screen with mounting bracket and hardware.

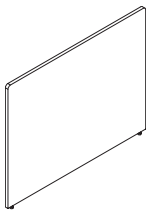

PRODUCT OPTIONS

Height	Depth	Screen Finish	Edge Trim Style	Bracket Finish
11, 13	14, 16	Source Laminate	**6** Straight Trim	**83** Very White **52** Ebony

SAMPLE ORDER CODE

EHWBTWS 13	**14**	**OK**	**6**	**83**

DIMENSIONS CODE

H	W	PRICING
11	14	862
11	16	968
13	14	1041
13	16	1171

EHWBTWF
Double-Sided End of Run Screen – Framed Fabric

The Double-Sided End of Run Screen – Framed Fabric mounts directly to the bench frame structure to create a physical separation between the bench and the corridor in a double-sided bench application.

WHAT'S INCLUDED
1 screen with mounting bracket and hardware.

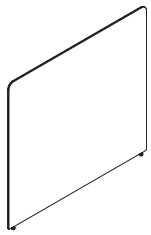

PRODUCT OPTIONS

Height	Depth	Screen Finish	Bracket Finish	Frame Finish
11, 13	14, 16	Panel Fabrics	**83** Very White **52** Ebony	**83** Very White **52** Ebony

SAMPLE ORDER CODE

EHWBTWF 13	**14**	**YB004**	**83**	**83**

DIMENSIONS CODE

H	W
11	14
11	16
13	14
13	16

PRICING

Fabric COM	Gr. 1	Gr. 2
1352	1352	1390
1401	1401	1446
1523	1523	1562
1481	1481	1525

hispace single-sided height-adjustable bench

product map

MHWBFYS Single-Sided Frame

Page 128

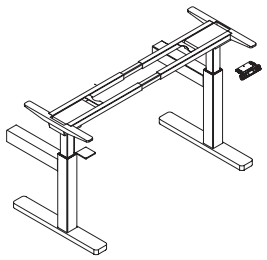

EHWBFSC Single-Sided Frame Weldment Cover

Page 129

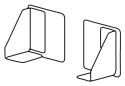

EHWBFBS Single-Sided Base Link

Page 130

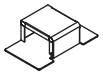

EHWBFSL Single-Sided Spine Tray – Low Capacity

Page 131

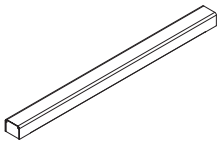

EHWBFSM Single-Sided Spine Tray – Medium Capacity

Page 132

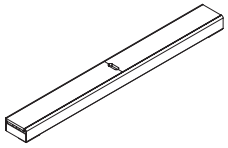

MHWBFSH Single-Sided Spine Tray – High Capacity

Page 133

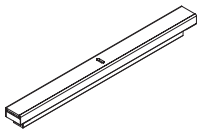

EHWBWBS Single-Sided Rectangular Worksurface with Square Corners

Page 134

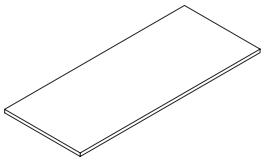

EHWBWJS Single-Sided Rectangular Worksurface with Radius Corners

Page 136

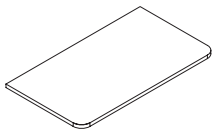

EHWBECE Single-Sided Cable Riser – End

Page 138

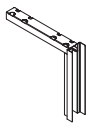

EHWBECM Single-Sided Cable Riser – Mid

Page 139

EHWBLSC Single-Sided Corridor Screen – Beveled Fabric

Page 140

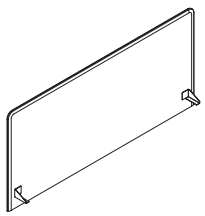

EHWBLSCF Single-Sided Corridor Floor Screen – Beveled Fabric

Page 141

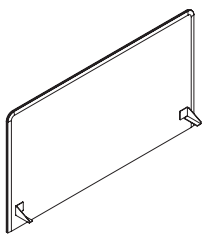

product map (continued)

EHWBLSF Single-Sided Corridor Screen – Framed Fabric

Page 142

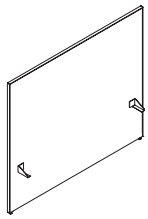

EHWBLSFF Single-Sided Corridor Floor Screen – Framed Fabric

Page 143

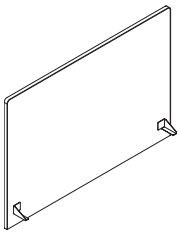

EHWBLSS Single-Sided Corridor Screen – Solid

Page 144

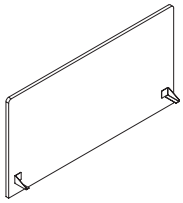

EHWBLSSF Single-Sided Corridor Floor Screen – Solid

Page 145

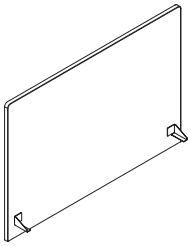

EHWBFWK Single-Sided Leveler Extension Blocks

Page 146

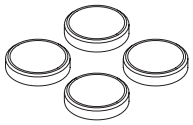

EHWBLBS Single-Sided Corridor Screen Alignment Clip - Solid

Page 147

E H W B F Y S
Single-Sided Frame

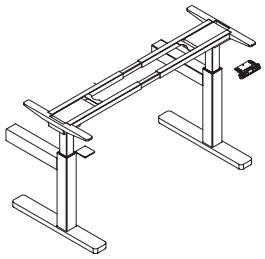

The hiSpace Single-Sided Frame is used with a Single-Sided Worksurface to create a Height-Adjustable or Fixed Height Bench workstation.

WHAT'S INCLUDED
Each frame includes 1 electric height-adjustable mechanism with switch (height-adjustable only), 2 leg columns (height adjustable or fixed height), 2 leg braces, 1 top frame, and 2 feet.

NOTES
Switch is not included with fixed height option.

Requires one Single-Sided Rectangular Worksurface (EHWBWBS/EHWBWJS).

Switches have programmable settings.

All electrical base mechanisms have a 0.2 watt resting power draw (height-adjustable only).

PRODUCT OPTIONS

Base Mechanism	Depth	Width	Switch	Finish	Country
9Y Extended Range	07, 08	12, 14, 15, 16, 18	**N** None	**83** Very White	**NN** None
2F Fixed Height			**D** Display with Up/ Down Memory	**52** Ebony	**01** UK/Ireland
			A Toggle Display with Memory		**02** Europe

SAMPLE ORDER CODE

EHWBFYS 9Y	07	14	D	83	01

STYLE

Base
Extended Range (9Y)
Fixed Height (2F)

PRICING

1976
1396

EHWBFSC
Single-Sided Frame Weldment Cover

The Single-Sided Frame Weldment Cover is used to cover the screen mounting provision on a single sided frame when no corridor screens are used.

WHAT'S INCLUDED
2 weldment covers.

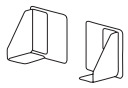

PRODUCT OPTIONS

Finish

83 Very White
52 Ebony

SAMPLE ORDER CODE

EHWBFSC 83

PRICING

67 / pair

E H W B F B S
Single-Sided Base Link

The Single-Sided Base Link is used to join a Single-Sided Frame to another Single-Sided Frame.

WHAT'S INCLUDED
1 frame link, assembly hardware.

PRODUCT OPTIONS

Finish
83 Very White
52 Ebony

SAMPLE ORDER CODE

EHWBFBS 83

PRICING

89

The Single-Sided Spine Tray – Low Capacity carries cables across workstations.

WHAT'S INCLUDED
1 spine tray with bottom cover and mounting hardware.

EHWBFSL
Single-Sided Spine Tray – Low Capacity

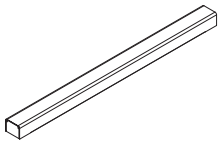

PRODUCT OPTIONS

Width	Spine Tray Finish
12, 14, 15, 16, 18	**83** Very White **52** Ebony

SAMPLE ORDER CODE

EHWBFSL 12	83

DIMENSIONS CODE	PRICING
W	
12	219
14	224
15	228
16	230
18	235

E H W B F S M

Single-Sided Spine Tray – Medium Capacity

The Single-Sided Spine Tray – Medium Capacity carries cables across workstations and is used to support power bar.

WHAT'S INCLUDED

1 spine tray with felt cover and mounting hardware.

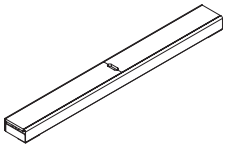

PRODUCT OPTIONS

Width	Spine Tray Top Cover	Spine Tray Finish	Spine Tray Cover Finish
12, 14, 15, 16, 18	**1** Smooth Felt	**83** Very White **52** Ebony	**R5** Pewter **R6** Lunar

SAMPLE ORDER CODE

EHWBFSM 12	**1**	**83**	**R5**

DIMENSIONS CODE	PRICING
W	
12	234
14	242
15	246
16	250
18	258

EHWBFSH
Single-Sided Spine Tray – High Capacity

The Single-Sided Spine Tray – High Capacity carries cables across workstations and used to support power bar.

WHAT'S INCLUDED
1 spine tray with felt cover and mounting hardware.

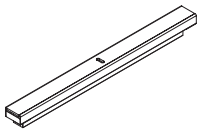

PRODUCT OPTIONS

Width	Spine Tray Top Cover	Spine Tray Finish	Spine Tray Cover Finish
12, 14, 15, 16, 18	**1** Smooth Felt	**83** Very White **52** Ebony	**R5** Pewter **R6** Lunar

SAMPLE ORDER CODE

EHWBFSH 12	**1**	**83**	**R5**

DIMENSIONS CODE	PRICING
W	
12	241
14	252
15	258
16	263
18	274

E H W B W B S

Single-Sided Rectangular Worksurface with Square Corners

The Single-Sided Rectangular Worksurface with Square Corners is used with the Double-Sided Frame.

WHAT'S INCLUDED
1 worksurface.

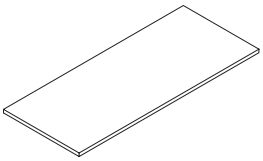

PRODUCT OPTIONS

Depth	Width	Cut Out	Grommet
07, 08	12, 14, 15, 16, 18	NN, 04, 06	**N** No Grommet **C** Grommet Center **L** Grommet Left **R** Grommet Right **B** Both Left and Right

SAMPLE ORDER CODE

EHWBWBS 07	**14**	**04**	**C**

PRODUCT OPTIONS CONTINUED

Surface Finish	Edge Trim Style	Edge Bend Finish	Grommet Finish	Access Door Finish
OK Oak	**6** Straight Trim	**1** Matching Trim	**83** Very White	**83** Very White
WT Walnut		**2** Black Trim	**52** Ebony	**52** Ebony
LW Light Walnut				Accent
MP Maple				
WH White				
SW Snow White				
LG Light Grey				
BH Beech				

SAMPLE ORDER CODE CONTINUED

OK	**6**	**1**	**83**	**83**

See pricing in the following page.

E H W B W B S

Single-Sided Rectangular Worksurface with Square Corners (Continued)

DIMENSIONS CODE		PRICING		
		NONE (NN) CUT OUT		
D	W	NO (N) GROMMET	CENTER (C), LEFT (L), RIGHT (R) GROMMET	BOTH (B) GROMMET
07	12	477	544	611
07	14	494	561	627
07	15	506	573	639
07	16	516	583	649
07	18	535	602	668
08	12	477	544	611
08	14	494	561	627
08	15	516	583	649
08	16	542	608	675
08	18	557	624	690
		400 MM (04) CUT OUT		
D	W	NO (N) GROMMET	LEFT (L), RIGHT (R) GROMMET	BOTH (B) GROMMET
07	12	619	686	753
07	14	636	703	769
07	15	648	715	781
07	16	658	725	791
07	18	677	744	810
08	12	619	686	753
08	14	636	703	769
08	15	658	725	791
08	16	684	750	817
08	18	699	766	833
		600 MM (06) CUT OUT		
D	W	NO (N) GROMMET	LEFT (L), RIGHT (R) GROMMET	BOTH (B) GROMMET
07	14	649	716	783
07	15	662	728	795
07	16	672	738	805
07	18	690	757	824
08	14	649	716	783
08	15	672	738	805
08	16	697	764	830
08	18	713	779	846

E H W B W J S

Single-Sided Rectangular Worksurface with Radius Corners

The Single-Sided Rectangular Worksurface with Radius Corners is used with the Double-Sided Frame.

WHAT'S INCLUDED
1 worksurface.

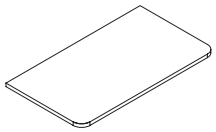

PRODUCT OPTIONS

Depth	Width	Cut Out	Grommet
07, 08	12, 14, 15, 16, 18	NN, 04, 06	**N** No Grommet **C** Grommet Center **L** Grommet Left **R** Grommet Right **B** Both Left and Right

SAMPLE ORDER CODE

EHWBWJS 07	**14**	**04**	**C**

PRODUCT OPTIONS CONTINUED

Surface Finish	Edge Trim Style	Edge Bend Finish	Grommet Finish	Access Door Finish
OK Oak	**6** Straight Trim	**1** Matching Trim	**83** Very White	**83** Very White
WT Walnut		**2** Black Trim	**52** Ebony	**52** Ebony
LW Light Walnut				Accent
MP Maple				
WH White				
SW Snow White				
LG Light Grey				
BH Beech				

SAMPLE ORDER CODE CONTINUED

OK	**6**	**1**	**83**	**83**

See pricing in the following page.

E H W B W J S

Single-Sided Rectangular Worksurface with Radius Corners (Continued)

DIMENSIONS CODE		PRICING		
		NONE (NN) CUT OUT		
D	W	NO (N) GROMMET	CENTER (C), LEFT (L), RIGHT (R) GROMMET	BOTH (B) GROMMET
07	12	477	544	611
07	14	494	561	627
07	15	506	573	639
07	16	516	583	649
07	18	535	602	668
08	12	477	544	611
08	14	494	561	627
08	15	516	583	649
08	16	542	608	675
08	18	557	624	690

		400 MM (04) CUT OUT		
D	W	NO (N) GROMMET	LEFT (L), RIGHT (R) GROMMET	BOTH (B) GROMMET
07	12	619	686	753
07	14	636	703	769
07	15	648	715	781
07	16	658	725	791
07	18	677	744	810
08	12	619	686	753
08	14	636	703	769
08	15	658	725	791
08	16	684	750	817
08	18	699	766	833

		600 MM (06) CUT OUT		
D	W	NO (N) GROMMET	LEFT (L), RIGHT (R) GROMMET	BOTH (B) GROMMET
07	14	649	716	783
07	15	662	728	795
07	16	672	738	805
07	18	690	757	824
08	14	649	716	783
08	15	672	738	805
08	16	697	764	830
08	18	713	779	846

E H W B E C E
Single-Sided Cable Riser – End

The Single-Sided Cable Riser – End is used to route power and data cables into the workstation from the floor when there is no power bar requirement.

WHAT'S INCLUDED
1 cable riser with mounting hardware.

NOTES
Cannot support power bar.

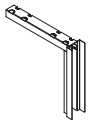

PRODUCT OPTIONS

Depth	Finish
07, 08	**83** Very White **52** Ebony

SAMPLE ORDER CODE

EHWBECE 07	83

DIMENSIONS CODE

D
07
08

PRICING

91
94

EHWBECM
Single-Sided Cable Riser – Mid

The Single-Sided Cable Riser – Mid is used to route power and data cables into the workstation from the floor.

WHAT'S INCLUDED
1 cable riser with mounting hardware.

NOTES
Able to support Power Bar 3-Gang.

PRODUCT OPTIONS

Plug Mount	Cover Finish
3 Powerbox 3-Gang (two power, one blanking)	**83** Very White **52** Ebony

SAMPLE ORDER CODE

EHWBECM 2	83

PRICING

149

E H W B L S C

Single-Sided Corridor Screen – Beveled Fabric

The Single-Sided Corridor Screen – Beveled Fabric attaches to the single-sided bench frame and provides casual privacy and space division between aisle way.

WHAT'S INCLUDED
1 screen with mounting bracket and hardware.

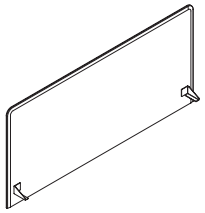

PRODUCT OPTIONS

Height	Width	Screen Finish
11, 13	12, 14, 15, 16, 18	Panel Fabrics

SAMPLE ORDER CODE

EHWBLSC 13	**12**	**YB004**

DIMENSIONS CODE

PRICING

H	W	Fabric COM	Gr. 1	Gr. 2
11	12	1132	1199	1284
11	14	1381	1451	1544
11	15	1459	1541	1647
11	16	1512	1598	1715
11	18	1613	1709	1839
13	12	1280	1344	1432
13	14	1420	1492	1585
13	15	1541	1621	1729
13	16	1634	1719	1836
13	18	1820	1919	2049

EHWBLSCF
Single-Sided Corridor Floor Screen – Beveled Fabric

hiSpace World Wide Single-Sided Corridor Floor Screen - Beveled Fabric can be specified when more enclosure is desired as the bottom edge reaches the floor with levellers. hiSpace World Wide Single-Sided Corridor Floor Screen - Beveled Fabric attaches to the single-sided bench frame and provides casual privacy and space division between the bench and aisle way.

WHAT'S INCLUDED
1 screen with mounting bracket and hardware.

NOTES
Bracket defaults to black.

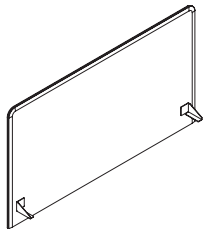

PRODUCT OPTIONS

Height	Width	Screen Finish
11, 13	12, 14, 15, 16, 18	Panel Fabrics

SAMPLE ORDER CODE

EHWBLSCF 13	**12**	**YB004**

DIMENSIONS CODE

PRICING

H	W	Fabric COM	Gr. 1	Gr. 2
11	12	946	946	975
11	14	1007	1007	1039
11	15	1065	1065	1101
11	16	1125	1125	1165
11	18	1185	1185	1228
13	12	1015	1015	1043
13	14	1321	1321	1354
13	15	1380	1380	1416
13	16	1439	1439	1479
13	18	1527	1527	1569

E H W B L S F

Single-Sided Corridor Screen – Framed Fabric

The Single-Sided Corridor Screen – Framed Fabric attaches to the single-sided bench frame and provides casual privacy and space division between aisle way.

WHAT'S INCLUDED
1 screen with mounting bracket and hardware.

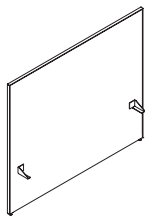

PRODUCT OPTIONS

Height	Width	Screen Finish	Frame Finish
11, 13	12, 14, 15, 16, 18	Panel Fabrics	**83** Very White **52** Ebony

SAMPLE ORDER CODE

EHWBLSF 13	**12**	**YB004**	**83**

DIMENSIONS CODE

PRICING

H	W	Fabric COM	Gr. 1	Gr. 2
11	12	895	895	926
11	14	917	917	951
11	15	993	993	1031
11	16	1018	1018	1058
11	18	1112	1112	1157
13	12	956	956	987
13	14	978	978	1012
13	15	1068	1068	1107
13	16	1095	1095	1136
13	18	1173	1173	1219

EHWBLSFF
Single-Sided Corridor Floor Screen – Framed Fabric

hiSpace World Wide Single-Sided Corridor Floor Screen - Framed Fabric can be specified when more enclosure is desired as the bottom edge reaches the floor with levellers. hiSpace World Wide Single-Sided Corridor Floor Screen - Framed Fabric attaches to the single-sided bench frame and provides casual privacy and space division between the bench and aisle way.

WHAT'S INCLUDED
1 screen with mounting bracket and hardware.

NOTES
Bracket defaults to black.

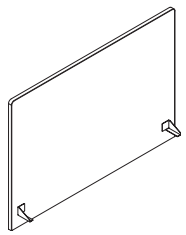

PRODUCT OPTIONS

Height	Width	Screen Finish	Frame Finish
11, 13	12, 14, 15, 16, 18	Panel Fabrics	**83** Very White **52** Ebony

SAMPLE ORDER CODE

EHWBLSFF 13	**12**	**YB004**	**83**

DIMENSIONS CODE

PRICING

H	W	Fabric COM	Gr. 1	Gr. 2
11	12	1081	1081	1112
11	14	1189	1189	1224
11	15	1259	1259	1298
11	16	1330	1330	1371
11	18	1437	1437	1483
13	12	1162	1162	1190
13	14	1285	1285	1319
13	15	1359	1359	1398
13	16	1438	1438	1481
13	18	1564	1564	1611

E H W B L S S

Single-Sided Corridor Screen – Solid

The Single-Sided Corridor Screen – Solid attaches to the single-sided bench frame and provides casual privacy and space division between aisle way.

WHAT'S INCLUDED
1 screen with mounting bracket and hardware.

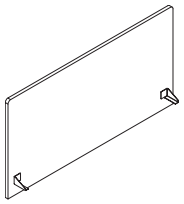

PRODUCT OPTIONS

Height	Width	Screen Finish	Edge Trim Style
11, 13	12, 14, 15, 16, 18	**OK** Oak **WT** Walnut **LW** Light Walnut **MP** Maple **WH** White **SW** Snow White **LG** Light Grey **BH** Beech	**6** Straight Trim

SAMPLE ORDER CODE

EHWBLSS 13	**12**	**OK**	**6**

DIMENSIONS CODE

H	W	PRICING
11	12	653
11	14	733
11	15	780
11	16	825
11	18	917
13	12	745
13	14	840
13	15	895
13	16	946
13	18	1053

EHWBLSSF
Single-Sided Corridor Floor Screen – Solid

hiSpace World Wide Single-Sided Corridor Floor Screen - Solid can be specified when more enclosure is desired as the bottom edge reaches the floor with levellers. hiSpace World Wide Single-Sided Corridor Floor Screen - Solid attaches to the single-sided bench frame and provides casual privacy and space division between the bench and aisle way.

WHAT'S INCLUDED
1 screen with mounting bracket and hardware.

NOTES
Bracket defaults to black.

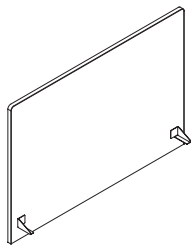

PRODUCT OPTIONS

Height	Width	Screen Finish	Edge Trim Style
11, 13	12, 14, 15, 16, 18	**OK** Oak **WT** Walnut **LW** Light Walnut **MP** Maple **WH** White **SW** Snow White **LG** Light Grey **BH** Beech	**6** Straight Trim

SAMPLE ORDER CODE

EHWBLSSF 13	12	OK	6

DIMENSIONS CODE		PRICING
H	W	
11	12	520
11	14	558
11	15	605
11	16	661
11	18	681
13	12	602
13	14	807
13	15	817
13	16	831
13	18	852

E H W B F W K

Single-Sided Leveler Extension Blocks

The hiSpace World Wide Single-Sided Leveler Extension Blocks are used to increase the leveling capabilities on single-sided frames by increments of 1cm.

WHAT'S INCLUDED
Specified quantity of leveler blocks.

NOTES
It is not recommended to stack more than two leveler blocks under each table leveler.

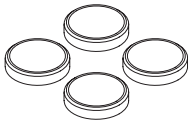

PRODUCT OPTIONS

Quantity	Finish
04, 32	**24** Greystone

SAMPLE ORDER CODE

EHWBFWK 04	24

CODE

Quantity
04
32

PRICING

35
269

EHWBLBS

Single-Sided Corridor Screen Alignment Clip - Solid

hiSpace World Wide Single-Sided Corridor Screen Alignment Clip is used to assist in alignment and gap control of side-by-side corridor screens.

WHAT'S INCLUDED
1 alignment clip, mounting hardware.

NOTES
Please ensure to predrill as this is a field installation and no pilot holes will be included on the screening

PRODUCT OPTIONS

Finish

83 Very White

52 Ebony

Accent

SAMPLE ORDER CODE

EHWBLBS 83

PRICING

64

hispace 120
height-adjustable bench

product map

EHWBFYT 120 Frame

Page 151

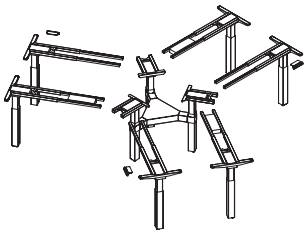

EHWBWBT 120 Worksurface with Square Corners

Page 152

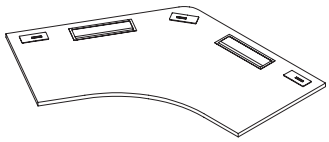

EHWBWJT 120 Worksurface with Radius Corners

Page 154

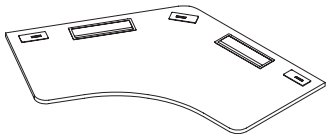

EHWBCAT 3-Way 120 Screen Aligner

Page 156

EHWBECMT 120 Cable Riser - Mid

Page 157

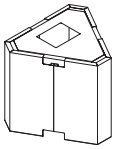

EHWBEWT 120 Wire Bridge

Page 158

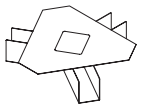

EHWBFYT
120 Frame

The 120 Frame is paired with 120 Worksurface with Square Corners (HWBWBT) or 120 Worksurface with Radius Corners (HWBWJT) to create a Height-Adjustable or Fixed Height 120 Bench Station.

WHAT'S INCLUDED
Each 120 Frame includes 3 bench stations, 9 leg columns (height-adjustable or fixed) with levelers, 6 cross channels, 3 end leg braces, 3 mid leg braces, 3 switches for height-adjustable stations, appropriate hardware.

NOTES
Switch is not included with fixed height option.

Requires three 120 Worksurfaces (EHWBWBT/EHWBWJT).

Include Covers/Gables to conceal leg braces.

All electric base mechanisms have a 0.2 W resting power draw and use a 240 V Universal control box (height-adjustable only).

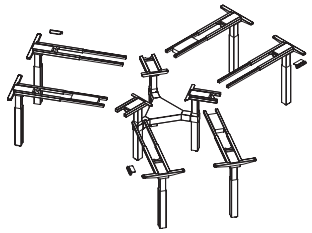

PRODUCT OPTIONS

Base Mechanism	Depth	Width	Switch	Finish	Country
9Y Extended Range	14, 16	12, 14, 15	**N** None	**83** Very White	**NN** None
2F Fixed Height			**D** Display with Up/ Down Memory	**52** Ebony	**01** UK/Ireland
			A Toggle Display with Memory		**02** Europe

SAMPLE ORDER CODE

EHWBFYT 9Y	16	14	D	83	01

STYLE

Base
Extended Range (9Y)
Fixed Height (2F)

PRICING

9086
5567

E H W B W B T

120 Worksurface with Square Corners

The 120 Worksurface with Square Corners is used with the 120 Frame.

WHAT'S INCLUDED
1 worksurface.

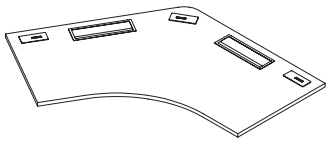

PRODUCT OPTIONS

Depth	Width	Access Door Size	Access Door Location	Grommet
07, 08	12, 14, 15	NN, 04, 06	**NN** None **LL** Left cut out **RR** Right cut out **BB** Both Left and Right cut out	**N** No Grommet **A** Left, Right and Center **B** Both Left and Right **L** Left **R** Right **C** Center

SAMPLE ORDER CODE

EHWBWBT 07	**14**	**04**	**LL**	**C**

PRODUCT OPTIONS CONTINUED

Surface Finish	Edge Trim Style	Edge Bend Finish	Grommet Finish	Access Door Finish
WT Walnut **OK** Oak **LW** Light Walnut **MP** Maple **WH** White **SW** Snow White **LG** Light Grey **BH** Beech	**6** Straight Trim	**1** Matching Trim **2** Black Trim	**NN** None **83** Very White **52** Ebony	**NN** None **83** Very White **52** Ebony

SAMPLE ORDER CODE CONTINUED

OK	**6**	**1**	**83**	**83**

See pricing in the following page.

E H W B W B T

120 Worksurface with Square Corners (Continued)

DIMENSIONS INCHES / MM		PRICING
D	W	Straight Edge
07	12	1658
07	14	1916
07	15	2182
08	12	1770
08	14	2035
08	15	2315

If 400mm Access Door Cut Out is specified:
- Left or Right Access Door Cut-out, add 170
- Left & Right Access Door Cut-out, add 340

If 600mm Access Door Cut Out is specified:
- Left or Right Access Door Cut-out, add 210
- Left & Right Access Door Cut-out, add 420

If Grommet Cut Out is specified:
- Left, Right or Center Grommet Cut-out, add 82
- Left & Right Grommet Cut-out, add 164
- Left, Right & Center Grommet Cut-out, add 246

E H W B W J T
120 Worksurface with Radius Corners

The 120 Worksurface with Radius Corners is used with the 120 Frame.

WHAT'S INCLUDED
1 worksurface.

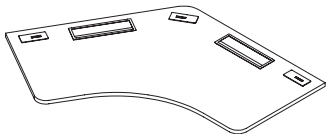

PRODUCT OPTIONS

Depth	Width	Access Door Size	Access Door Location	Grommet
07, 08	12, 14, 15	NN, 04, 06	**NN** None **LL** Left cut out **RR** Right cut out **BB** Both Left and Right cut out	**N** No Grommet **A** Left, Right and Center **B** Both Left and Right **L** Left **R** Right **C** Center

SAMPLE ORDER CODE

EHWBWJT 07	14	04	LL	C

PRODUCT OPTIONS CONTINUED

Surface Finish	Edge Trim Style	Edge Bend Finish	Grommet Finish	Access Door Finish
OK Oak **WT** Walnut **LW** Light Walnut **MP** Maple **WH** White **SW** Snow White **LG** Light Grey **BH** Beech	**6** Straight Trim	**1** Matching Trim **2** Black Trim	**NN** None **83** Very White **52** Ebony	**NN** None **83** Very White **52** Ebony

SAMPLE ORDER CODE CONTINUED

OK	6	1	83	83

See pricing in the following page.

E H W B W J T
120 Worksurface with Radius Corners (Continued)

DIMENSIONS INCHES / MM		PRICING
D	W	Straight Edge
07	12	1658
07	14	1916
07	15	2182
08	12	1770
08	14	2035
08	15	2315

If 400mm Access Door Cut Out is specified:
- Left or Right Access Door Cut-out, add 170
- Left & Right Access Door Cut-out, add 340

If 600mm Access Door Cut Out is specified:
- Left or Right Access Door Cut-out, add 210
- Left & Right Access Door Cut-out, add 420

If Grommet Cut Out is specified:
- Left, Right or Center Grommet Cut-out, add 82
- Left & Right Grommet Cut-out, add 164
- Left, Right & Center Grommet Cut-out, add 246

E H W B C A T
3-Way 120 Screen Aligner

The 3-Way 120 Screen Aligner is used to ensure even spacing between screens at the center of the workstation bench where the screens come together. Available in one height.

WHAT'S INCLUDED
One 3-Way 120 Screen Aligner

PRODUCT OPTIONS

Screen Type	Aligner Height	Finish
S Solid	11	**83** Very White
F Framed Fabric		**52** Ebony
B Beveled		

SAMPLE ORDER CODE

EHWBCAT S	**11**	**83**

PRICING

150

The 120 Cable Riser is used to route/store power and data cables from the floor and spine tray.

WHAT'S INCLUDED
1 cable riser with mounting hardware.

EHWBECMT
120 Cable Riser - Mid

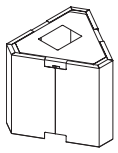

PRODUCT OPTIONS

Plug Boxes	Cover Finish
3 Powerbox 3-Gang (two Power, one Blanking)	**83** Very White **52** Ebony

SAMPLE ORDER CODE

EHWBECMT 3	83

PRICING

412

E H W B E W T
120 Wire Bridge

The hiSpace World Wide 120 Wire Bridge is used to pass cables between three spine trays, specifically when a cable riser is not present at the junction.

WHAT'S INCLUDED
120 Wire bridge.

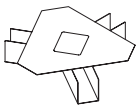

PRODUCT OPTIONS

Finish
83 Very White
52 Ebony

SAMPLE ORDER CODE

EHWBEWT 83

PRICING

	166

hispace
universal components

product map

EHWBFTV Universal Spine Tray Cover

Page 162

EHWBEWV Wire Cover

Page 163

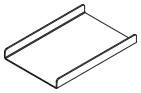

EHWBEWB Wire Bridge

Page 164

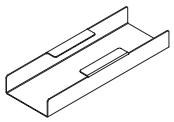

EHWBEUY Under Worksurface Cable Tray

Page 165

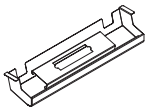

EHWBEEE Vertical Wire Carrier

Page 166

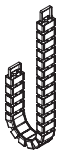

EHWBEEB Vertical Wire Carrier Bracket & Cover

Page 167

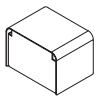

EHWBEWY Felt Cover Cable Organizer

Page 168

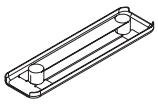

EHWBETP Power Bar Holder for Spine Trays

Page 169

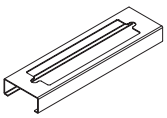

EHWBCGE End Gable

Page 170

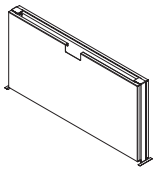

EHWBAWW Hanging Whiteboard

Page 171

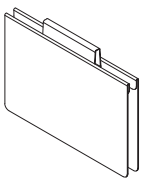

EHWBAWR Bag Drop

Page 172

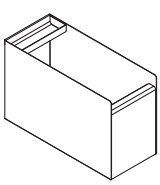

EHWBANP Workstation Name Plate

Page 173

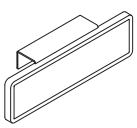

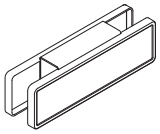

E H W B F T V
Universal Spine Tray Cover

The Universal Spine Tray Cover is used to the cover the holes for screen mounting or spine tray in the event there are no screens or spine tray in the double-sided application.

WHAT'S INCLUDED
2 covers.

PRODUCT OPTIONS

Finish

83 Very White
52 Ebony

SAMPLE ORDER CODE

EHWBFTV 83

PRICING

67

EHWBEWV
Wire Cover

The Wire Cover hides the exposed wires between the wire riser and the spine tray.

WHAT'S INCLUDED
1 wire cover.

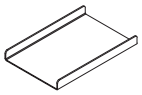

PRODUCT OPTIONS

Type	Finish
S Single-Sided	**83** Very White
D Double-Sided	**52** Ebony

SAMPLE ORDER CODE

EHWBEWV S	**83**

PRICING

33

E H W B E W B
Wire Bridge

The Wire Bridge provides wire management across two height-adjustable workstations.

WHAT'S INCLUDED
1 wire bridge.

NOTES
Attaches to the frame link.

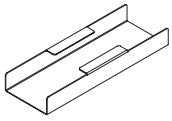

PRODUCT OPTIONS

Style	Finish
U Universal	**83** Very White **52** Ebony

SAMPLE ORDER CODE

EHWBEWB U	**83**

PRICING

33

EHWBEUY
Under Worksurface Cable Tray

The Under Worksurface Cable Tray provides discrete wire management with a capability for run cable below the power module.

WHAT'S INCLUDED
1 cable tray and hardware.

NOTES
Tray is complete with holes which will allow for the mounting of Powerbox 4-Gang Power Bars or Hardwired.

Powerbox to be purchased separately.

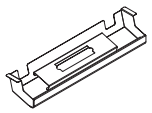

PRODUCT OPTIONS

Type	Nominal Size	Plug Mount	Finish
U Under Worksurface	04, 06	**0** None **1** Hard Wire 4-Gang **2** Powerbox 4-Gang	**83** Very White **52** Ebony

SAMPLE ORDER CODE

EHWBEUY U	04	1	83

DIMENSIONS CODE

Nominal Size
04
06

PRICING

135
144

E H W B E E E
Vertical Wire Carrier

The Vertical Wire Carrier safely manages and conceals all vertical wires and cables.

WHAT'S INCLUDED
1 vertical wire carrier with mounting hardware.

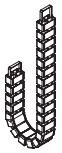

PRODUCT OPTIONS

Style	Finish
1 Standard Capacity - Perpendicular	**83** Very White
2 High Capacity - Perpendicular	**52** Ebony

SAMPLE ORDER CODE

EHWBEEE 1	**83**

PRICING

144

EHWBEEB
Vertical Wire Carrier Bracket & Cover

The Vertical Wire Carrier Bracket & Cover is fixed to the frame to support Vertical Wire Carrier in the absents of spine tray.

WHAT'S INCLUDED
1 vertical wire carrier cover with mounting hardware.

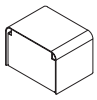

PRODUCT OPTIONS

Style	Finish
U Universal	**83** Very White **52** Ebony

SAMPLE ORDER CODE

EHWBEEB U	**83**

PRICING

111

E H W B E W Y
Felt Cover Cable Organizer

The Felt Cover Cable Organizer is used to hide the leg cable and control box.

WHAT'S INCLUDED
1 metal cable organizer spine, two wire looms and three velcro straps, felt cover (if specified), mounting hardware.

NOTES
Not applicable if grommet and flip up is specified.

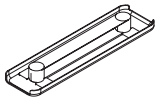

PRODUCT OPTIONS

Configuration
03 Large Cable Organizer with Felt Cover

SAMPLE ORDER CODE

EHWBEWY 03

PRICING

189

EHWBETP
Power Bar Holder for Spine Trays

The Power Bar Holder for Spine Trays is required when you need to specify power bar for medium and high capacity spine tray.

WHAT'S INCLUDED
1 power bar holder with hardware.

NOTES
Applicable for both single-sided and double-sided height-adjustable bench.

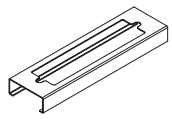

PRODUCT OPTIONS

Cut Out Type	Finish
1 Hard Wire 4-Gang	**83** Very White
2 Powerbox 4-Gang	**52** Ebony

SAMPLE ORDER CODE

EHWBETP 1	83

PRICING

44

E H W B C G E
End Gable

The End Gable attaches to the Bench Frame leg brace to create additional privacy between the bench and a corridor as well as a physical enclosure between adjustable leg columns to the floor.

WHAT'S INCLUDED
1 outer gable, 1 metal inner gable, mounting hardware.

NOTES
The inner gable always comes in Metal. Outer gable has selection of Metal, Felt or Solid.

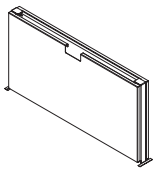

PRODUCT OPTIONS

Depth	Outer Finish	Cable Exit	Inner Finish
14, 16	**83** Very White	**Y** Yes	**83** Very White
	52 Ebony	**N** No	**52** Ebony
	OK Oak		
	WT Walnut		
	LW Light Walnut		
	MP Maple		
	WH White		
	SW Snow White		
	LG Light Grey		
	BH Beech		
	R5 Pewter		
	R6 Lunar		

SAMPLE ORDER CODE

EHWBCGE 14	**52**	**Y**	**83**

DIMENSIONS CODE

PRICING

W	Metal Outer Finish	Laminate Outer Finish	Smooth Felt Outer Finish
14	222	289	323
16	230	296	331

EHWBAWW
Hanging Whiteboard

The Hanging Whiteboard provides a writable surface for height-adjustable bench.

WHAT'S INCLUDED
1 hanging whiteboard.

NOTES
Attaches to the single-sided or double-sided screens.

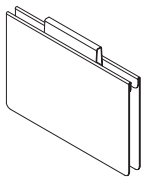

PRODUCT OPTIONS

Application	Screen Type
S Single-Sided	**C** Curved
D Double-Sided	**S** Solid
	X Infinity

SAMPLE ORDER CODE

EHWBAWW S	C

PRICING

Single-Sided	Double-Sided
135	233

E H W B A W R
Bag Drop

The Bag Drop offers casual mobile storage of personal items and work bags below the worksurface.

WHAT'S INCLUDED
1 bag drop unit with small tray.

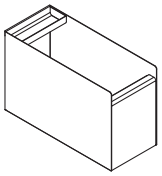

PRODUCT OPTIONS

Case Finish	Front Finish	Smooth Felt
83 Very White	**83** Very White	**R5** Pewter
52 Ebony	**52** Ebony	**R6** Lunar
	Accent	**NN** None

SAMPLE ORDER CODE

EHWBAWR 83	**83**	**R5**

PRICING

970

EHWBANP
Workstation Name Plate

WHAT'S INCLUDED
1 metal bracket, 1 name plate consisting of 1 metal bezel and 1 plastic chassis, 1 transparent cover sheet, 1 whiteboard, information sheet with link to template.

NOTES
Workstation Name Plate magnetically attaches onto the metal bracket. Single-sided and double-sided options are available for solid, framed fabric and smooth felt screens. Infinity screen for single-sided application only.

Workstation Name Plate can be used in two different ways:
- Whiteboard - for non-permanent use such as hot-desking or co-working applications
- Printed Template - for more permanent applications, users can print their name plate using templates provided on product website. Customizable templates are available for download at www.teknion.com/workstation-nameplate. Printed template is placed behind the transparent cover sheet for added protection.

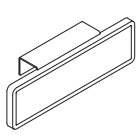

Single-Sided

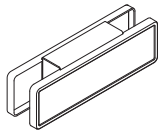

Double-Sided

PRODUCT OPTIONS

Screen Type	Application	Bracket Finish	Bezel Finish
S Solid Screen	**S** Hang-on Single-Sided	**83** Very White	**83** Very White
F Frame Fabric Screen	**D** Hang-on Double-Sided	**52** Ebony	**52** Ebony
B Beveled Screen			
I Infinity Screen			

SAMPLE ORDER CODE

EHWBANP S	S	83	83

DIMENSIONS CODE	PRICING
Single-Sided (S)	75
Double-Sided (D)	148

E H W B F T C
hiSpace Spine Tray End Cover

The hiSpace Spine Tray End Cover caps the exposed spine tray end of the start and finish of the bench run.

WHAT'S INCLUDED
1 Spine tray end cover.

NOTES
Not required when an end cable riser, end gable, or end of run screen is present.

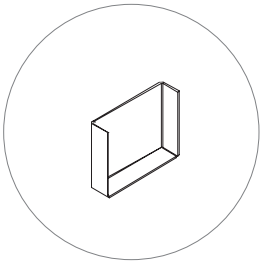

PRODUCT OPTIONS

Finish
83 Very White
52 Ebony

SAMPLE ORDER CODE

EHWBFTC 83

PRICING

47

EHWBCLZ
hiSpace Smooth Felt Lateral Screen

The hiSpace Smooth Felt Lateral Screen creates casual space division between neighboring workstations.

WHAT'S INCLUDED
Lateral smooth felt screen, mounting bracket, mounting hardware.

NOTES
Screens must be specified as left/right as based on the user's orientation.

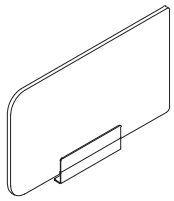

PRODUCT OPTIONS

Height	Depth	Screen Fit	Corner Profile	Left/Right	Smooth Felt Finish	Bracket Finish
11	07, 08	**F** Full	**J** Radius	**L** Left	**R5** Pewter	**83** Very White
		P Partial	**B** Straight	**R** Right	**R6** Lunar	**52** Ebony

SAMPLE ORDER CODE

EHWBCLZ 11	**07**	**P**	**J**	**L**	**R5**	**83**

DIMENSIONS CODE	PRICING
D	
07	284
08	315

hispace
height-adjustable tables

product map

EYWYR hiSpace World Wide Height-Adjustable Freestanding – Base Only

Page 179

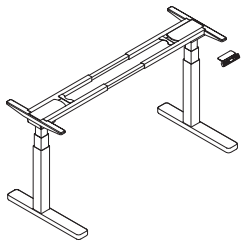

EYWWB hiSpace World Wide Rectangular Worksurface

Page 180

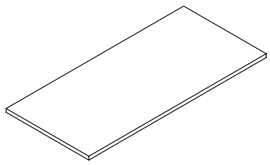

EYWWJ hiSpace World Wide Rectangular Worksurface with Radius Corners

Page 182

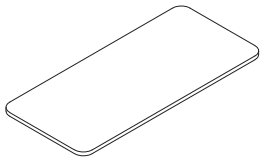

EYNS hiSpace Basic 120 Height-Adjustable Freestanding Table – Base Only

Page 184

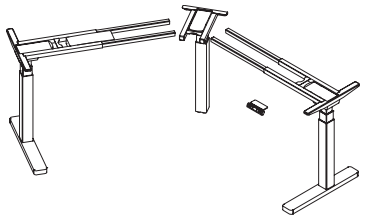

EYWBWBT hiSpace Freestanding 120 Worksurface with Square Corners

Page 186

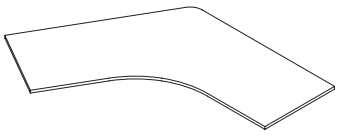

EYWBWJT hiSpace Freestanding 120 Worksurface with Radius Corners

Page 188

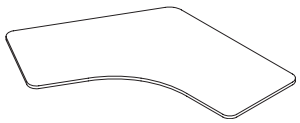

EYWUY Under Worksurface Cable Tray for Freestanding Height-Adjustable Table

Page 190

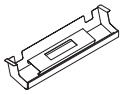

EYWEE e-Chain Vertical Cable Manager for Freestanding hiSpace World Wide

Page 191

EYWXC Infinity Curved Desk Edge Screen for Freestanding Height-Adjustable Table

Page 192

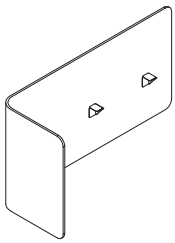

EYWXD Infinity Desk Edge Screen for Freestanding Height-Adjustable Table

Page 193

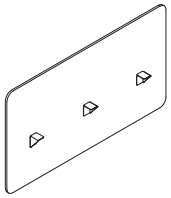

EYWFD Desk Edge Screen – Framed Fabric

Page 194

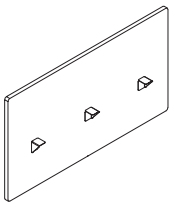

EYWMS Modesty Panel for Freestanding Height-Adjustable Table – Solid

Page 195

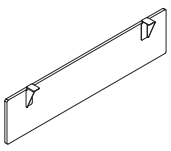

product map (continued)

EYWMF Modesty Panel for Freestanding Height-Adjustable Table – Smooth Felt

Page 196

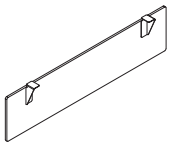

EYWYR

hiSpace World Wide Height-Adjustable Freestanding – Base Only

The hiSpace World Wide Height-Adjustable Freestanding – Base Only provides a freestanding, height-adjustable table with a refined aesthetic.

WHAT'S INCLUDED

Electric height-adjustable or fixed height base only. Worksurface not included. All installation hardware.

NOTES

Switch is not included with fixed height option.

Ships knocked down.

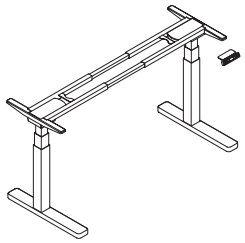

PRODUCT OPTIONS

Base Mechanism	Surface Depth	Surface Width	Base Finish	Switch	Country
9Y Extended Range	07, 08	12, 14, 15, 16, 18	**83** Very White	**N** None	**NN** None
2F Fixed Height			**52** Ebony	**D** Display with Up/ Down Memory	**01** UK/Ireland
				A Toggle Display with Memory	**02** Europe

SAMPLE ORDER CODE

EYWYR 9Y	07	14	52	D	01

PRICING

Extended Range (9Y)	Fixed Height (2F)
1734	1084

E Y W W B

hiSpace World Wide Rectangular Worksurface

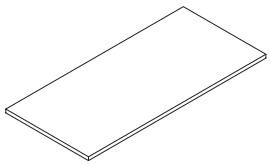

The hiSpace World Wide Rectangular Worksurface Straight Corner is to be used on hiSpace World Wide Height-Adjustable Table Base.

WHAT'S INCLUDED
1 worksurface.

NOTES
Actual width is calculated as the stated nominal width is minus 5cm and depth is minus 2.5cm.

Grommet (N) is available only if Access Door Cut-Out Size is (04) and (06) are specified.

Grommet (C) is available only if Access Door (NN) are specified.

Grommet finish is not available if Grommet (N) are specified.

Access Door finish is not available if Access door (NN) are specified.

PRODUCT OPTIONS

Base Mechanism	Nominal Depth	Nominal Width	Access Door Cut Out	Grommet
9Y Extended Range	07, 08	12, 14, 15, 16, 18	NN, 04, 06	**N** No Grommet **C** Grommet Center **L** Grommet Left **R** Grommet Right **B** Both Right and Left

SAMPLE ORDER CODE

EYWWB 9Y	**07**	**14**	**04**	**C**

PRODUCT OPTIONS CONTINUED

Surface Finish	Edge Trim Finish	Edge Bend Finish	Grommet Finish	Access Door Finish
OK Oak	**6** Straight	**1** Matching Trim	**83** Very White	**83** Very White
WT Walnut		**2** Black Trim	**52** Ebony	**52** Ebony
LW Light Walnut				
MP Maple				
WH White				
SW Snow White				
LG Light Grey				
BH Beech				

SAMPLE ORDER CODE CONTINUED

YQ	**6**	**1**	**83**	**83**

Pricing is continued on the following page.

E Y W W B

hiSpace World Wide Rectangular Worksurface (Continued)

DIMENSIONS CODE		PRICING		
		NONE (NN) CUT OUT		
D	W	NO (N) GROMMET	CENTER (C), LEFT (L), RIGHT (R) GROMMET	BOTH (B) GROMMET
07	12	477	544	611
07	14	494	561	627
07	15	506	573	639
07	16	516	583	649
07	18	535	602	668
08	12	477	544	611
08	14	494	561	627
08	15	516	583	649
08	16	542	608	675
08	18	557	624	690
		400 MM (04) CUT OUT		
D	W	NO (N) GROMMET	LEFT (L), RIGHT (R) GROMMET	BOTH (B) GROMMET
07	12	619	686	753
07	14	636	703	769
07	15	648	715	781
07	16	658	725	791
07	18	677	744	810
08	12	619	686	753
08	14	636	703	769
08	15	658	725	791
08	16	684	750	817
08	18	699	766	833
		600 MM (06) CUT OUT		
D	W	NO (N) GROMMET	LEFT (L), RIGHT (R) GROMMET	BOTH (B) GROMMET
07	14	649	716	783
07	15	662	728	795
07	16	672	738	805
07	18	690	757	824
08	14	649	716	783
08	15	672	738	805
08	16	697	764	830
08	18	713	779	846

E Y W W J

hiSpace World Wide Rectangular Worksurface with Radius Corners

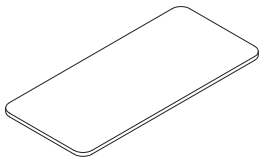

The hiSpace World Wide Rectangular Worksurface with Radius Corners is to be used on hiSpace World Wide Height-Adjustable Table Base.

WHAT'S INCLUDED
1 worksurface.

NOTES
Actual width is calculated as the stated nominal width is minus 5cm and depth is minus 2.5cm.

Grommet (N) is available only if Access Door Cut-Out Size is (04) and (06) are specified.

Grommet (C) is available only if Access Door (NN) are specified.

Grommet finish is not available if Grommet (N) are specified.

Access Door finish is not available if Access door (NN) are specified.

PRODUCT OPTIONS

Base Mechanism	Nominal Depth	Nominal Width	Access Door Cut Out	Grommet
9Y Extended Range	07, 08	12, 14, 15, 16, 18	NN, 04, 06	**N** No Grommet **C** Grommet Center **L** Grommet Left **R** Grommet Right **B** Both Right and Left

SAMPLE ORDER CODE

EYWWJ 9Y	**07**	**14**	**04**	**C**

PRODUCT OPTIONS CONTINUED

Surface Finish	Edge Trim Finish	Edge Bend Finish	Grommet Finish	Access Door Finish
OK Oak	**6** Straight	**1** Matching Trim	**83** Very White	**83** Very White
WT Walnut		**2** Black Trim	**52** Ebony	**52** Ebony
LW Light Walnut				
MP Maple				
WH White				
SW Snow White				
LG Light Grey				
BH Beech				

SAMPLE ORDER CODE CONTINUED

YQ	**6**	**1**	**83**	**83**

Pricing is continued on the following page.

E Y W W J

hiSpace World Wide Rectangular Worksurface with Radius Corners (Continued)

DIMENSIONS CODE		PRICING		
		NONE (NN) CUT OUT		
D	W	NO (N) GROMMET	CENTER (C), LEFT (L), RIGHT (R) GROMMET	BOTH (B) GROMMET
07	12	477	544	611
07	14	494	561	627
07	15	506	573	639
07	16	516	583	649
07	18	535	602	668
08	12	477	544	611
08	14	494	561	627
08	15	516	583	649
08	16	542	608	675
08	18	557	624	690
		400 MM (04) CUT OUT		
D	W	NO (N) GROMMET	LEFT (L), RIGHT (R) GROMMET	BOTH (B) GROMMET
07	12	619	686	753
07	14	636	703	769
07	15	648	715	781
07	16	658	725	791
07	18	677	744	810
08	12	619	686	753
08	14	636	703	769
08	15	658	725	791
08	16	684	750	817
08	18	699	766	833
		600 MM (06) CUT OUT		
D	W	NO (N) GROMMET	LEFT (L), RIGHT (R) GROMMET	BOTH (B) GROMMET
07	14	649	716	783
07	15	662	728	795
07	16	672	738	805
07	18	690	757	824
08	14	649	716	783
08	15	672	738	805
08	16	697	764	830
08	18	713	779	846

EYNS

hiSpace Basic 120 Height-Adjustable Freestanding Table – Base Only

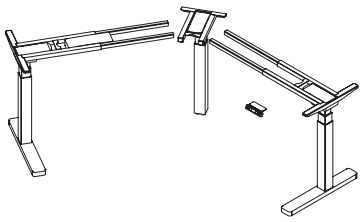

WHAT'S INCLUDED

Each 120° table base includes 1 electric height-adjustable mechanism with switch (height-adjustable only), 3 height-adjustable or fixed height legs with levelers, all assembly hardware, shipped knocked down, worksurface not included.

NOTES

Switch is not included with fixed height option.

Always uses a C-Leg Application.

Surface dimensions are actual width and actual depth.

Electric base mechanism has 0.2 Watt resting power draw and uses a 240V universal control box (height-adjustable only).

PRODUCT OPTIONS

Base Mechanism	Surface Depth	Surface Width	Base Finish	Switch	Country
9Y Extended Range **2F** Fixed Height	07, 08	12, 14, 15	**83** Very White **52** Ebony	**N** None **D** Display with Up/ Down Memory **A** Toggle Display with Memory	**NN** None **01** UK/Ireland **02** Europe

SAMPLE ORDER CODE

EYNS 9Y	07	15	52	D	01

PRICING

Extended Range (9Y)	Fixed Height (2F)
2964	1606

E Y W B W B T

hiSpace Freestanding 120 Worksurface with Square Corners

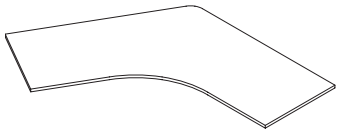

The hiSpace 120 Worksurface is to be paired with the 120 Frame (EHWBFYT) to create a Height-Adjustable 120 Bench station.

WHAT'S INCLUDED
1 worksurface, cut outs (if specified), mounting hardware.

NOTES
Access Door Cut Out Size (06) is not available when Width 12 is selected.

Access Door Cut Out Location (NN) must be selected when Access Door Size (NN) is selected.

Stop option on Access Door Finish for Access Door Size (NN).

Stop option on Grommet Finish for Grommet (N).

PRODUCT OPTIONS

Depth	Width	Access Door Size	Access Door Location	Grommet
07, 08	12, 14, 15	NN, 04, 06	**NN** None	**N** No Grommet
			LL Left cut out	**A** Left, Right and Center
			RR Right cut out	**B** Both Left and Right
			BB Both Left and Right cut out	**L** Left
				R Right
				C Center

SAMPLE ORDER CODE

EYWBWBT 07	**14**	**04**	**LL**	**C**

PRODUCT OPTIONS CONTINUED

Surface Finish	Edge Trim Style	Edge Bend Finish	Grommet Finish	Access Door Finish
OK Oak	**6** Straight Trim	**1** Matching Trim	**NN** None	**NN** None
WT Walnut		**2** Black Trim	**83** Very White	**83** Very White
LW Light Walnut			**52** Ebony	**52** Ebony
MP Maple				
WH White				
SW Snow White				
LG Light Grey				
BH Beech				

SAMPLE ORDER CODE CONTINUED

OK	**6**	**1**	**83**	**83**

See pricing in the following page.

E Y W B W B T

hiSpace Freestanding 120 Worksurface with Square Corners (Continued)

DIMENSIONS INCHES / MM		PRICING
D	W	Straight Edge
07	12	1658
07	14	1916
07	15	2182
08	12	1770
08	14	2035
08	15	2315

If 400mm Access Door Cut Out is specified:
- Left or Right Access Door Cut-out, add 170
- Left & Right Access Door Cut-out, add 340

If 600mm Access Door Cut Out is specified:
- Left or Right Access Door Cut-out, add 210
- Left & Right Access Door Cut-out, add 420

If Grommet Cut Out is specified:
- Left, Right or Center Grommet Cut-out, add 82
- Left & Right Grommet Cut-out, add 164
- Left, Right & Center Grommet Cut-out, add 246

E Y W B W J T

hiSpace Freestanding 120 Worksurface with Radius Corners

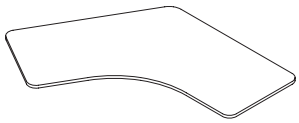

The hiSpace 120 Worksurface is to be paired with the 120 Frame (EHWBFYT) to create a Height-Adjustable 120 Bench station.

WHAT'S INCLUDED
1 worksurface, cut outs (if specified), mounting hardware.

NOTES
Access Door Cut Out Size (06) is not available when Width 12 is selected.

Access Door Cut Out Location (NN) must be selected when Access Door Size (NN) is selected.

Stop option on Access Door Finish for Access Door Size (NN).

Stop option on Grommet Finish for Grommet (N).

PRODUCT OPTIONS

Depth	Width	Access Door Size	Access Door Location	Grommet
07, 08	12, 14, 15	NN, 04, 06	**NN** None	**N** No Grommet
			LL Left cut out	**A** Left, Right and Center
			RR Right cut out	**B** Both Left and Right
			BB Both Left and Right cut out	**L** Left
				R Right
				C Center

SAMPLE ORDER CODE

EYWBWJT 07	**14**	**04**	**LL**	**C**

PRODUCT OPTIONS CONTINUED

Surface Finish	Edge Trim Style	Edge Bend Finish	Grommet Finish	Access Door Finish
OK Oak	**6** Straight Trim	**1** Matching Trim	**NN** None	**NN** None
WT Walnut		**2** Black Trim	**83** Very White	**83** Very White
LW Light Walnut			**52** Ebony	**52** Ebony
MP Maple				
WH White				
SW Snow White				
LG Light Grey				
BH Beech				

SAMPLE ORDER CODE CONTINUED

OK	**6**	**1**	**83**	**83**

See pricing in the following page.

E Y W B W J T

hiSpace Freestanding 120 Worksurface with Radius Corners (Continued)

DIMENSIONS INCHES / MM		PRICING
D	W	Straight Edge
07	12	1658
07	14	1916
07	15	2182
08	12	1770
08	14	2035
08	15	2315

If 400mm Access Door Cut Out is specified:
- Left or Right Access Door Cut-out, add 170
- Left & Right Access Door Cut-out, add 340

If 600mm Access Door Cut Out is specified:
- Left or Right Access Door Cut-out, add 210
- Left & Right Access Door Cut-out, add 420

If Grommet Cut Out is specified:
- Left, Right or Center Grommet Cut-out, add 82
- Left & Right Grommet Cut-out, add 164
- Left, Right & Center Grommet Cut-out, add 246

E Y W U Y

Under Worksurface Cable Tray for Freestanding Height-Adjustable Table

The Under Worksurface Cable Tray for Freestanding Height-Adjustable Table provides discrete wire management with a capability for run cable below the power module.

WHAT'S INCLUDED
1 cable tray and hardware.

NOTES
Tray is complete with holes which will allow for the mounting of Power Unit 4-Gang Power Bars or Hardwired.

Power Unit to be purchased separately.

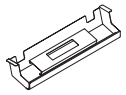

PRODUCT OPTIONS

Type	Nominal Size	Plug Mount	Finish
U Under Worksurface	04, 06	**0** None **1** Hard Wire 4-Gang **2** Powerbox M 4-Gang	**83** Very White **52** Ebony

SAMPLE ORDER CODE

EYWUY U	**04**	**1**	**83**

DIMENSIONS CODE	PRICING
W	
04	135
06	144

WHAT'S INCLUDED
1 e-chain vertical wire manager, 1 leg cover, 1 top bracket and screws.

NOTES
Flexible portion finished in Very White or Ebony.

EYWEE
e-Chain Vertical Cable Manager for Freestanding hiSpace World Wide

PRODUCT OPTIONS

Style	Leg Cover Finish	e-Chain Finish
1 Standard Capacity	**83** Very White **52** Ebony	**83** Very White **52** Ebony

SAMPLE ORDER CODE

EYWEE 1	**83**	**60**

PRICING

230

E Y W X C

Infinity Curved Desk Edge Screen for Freestanding Height-Adjustable Table

The Infinity Curved Desk Edge Screen for Freestanding Height-Adjustable Table attaches to the worksurface and provides casual privacy and space division.

WHAT'S INCLUDED
1 screen with mounting bracket and hardware.

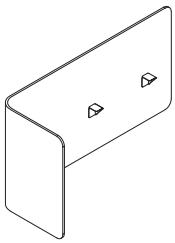

PRODUCT OPTIONS

Height	Depth	Width	Orientation	Desk Edge Screen Fabric Finish	Bracket Finish
11, 13	20	12, 14, 15, 16	**L** Left	Panel Fabrics	**83** Very White
			R Right	Upholstery Fabrics	**52** Ebony

SAMPLE ORDER CODE

EYWXC 11	**20**	**16**	**R**	**E380**	**83**

DIMENSIONS CODE

H	D	W
11	20	12
11	20	14
11	20	15
11	20	16
13	20	12
13	20	14
13	20	15
13	20	16

PRICING

Fabric A/COM	Gr. 1	Gr. 2	Gr. 3	Gr.5	Upholstery COM	Gr. 1	Gr. 2	Gr. 3	Gr. 4
1913	1962	2030	2056	2136	1962	1962	2063	2098	2149
1946	2002	2078	2107	2197	2002	2002	2116	2153	2210
1962	2022	2102	2132	2228	2022	2022	2141	2181	2241
1981	2045	2128	2160	2260	2045	2045	2170	2211	2274
2199	2300	2434	2485	2646	2300	2300	2502	2570	2671
2267	2380	2530	2586	2767	2380	2380	2605	2681	2794
2300	2419	2577	2637	2827	2419	2419	2657	2736	2856
2338	2463	2630	2693	2893	2463	2463	2714	2797	2923

EYWXD

Infinity Desk Edge Screen for Freestanding Height-Adjustable Table

The Infinity Desk Edge Screen for Freestanding Height-Adjustable Table attaches to the worksurface and provides casual privacy and space division.

WHAT'S INCLUDED
1 screen with mounting bracket and hardware.

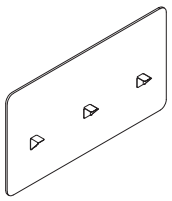

PRODUCT OPTIONS

Height	Width	Screen Finish	Bracket Finish
11, 13	12, 14, 15, 16, 18	Panel Fabrics Upholstery Fabrics	**83** Very White **52** Ebony

SAMPLE ORDER CODE

EYWXD 13	**12**	**B203**	**83**

DIMENSIONS CODE

H	W
11	12
11	14
11	15
11	16
11	18
13	12
13	14
13	15
13	16
13	18

PRICING

Fabric A/COM	Gr. 1	Gr. 2	Gr. 3	Gr.5	Upholstery COM	Gr. 1	Gr. 2	Gr. 3	Gr. 4
1520	1554	1602	1641	1723	1554	1554	1625	1648	1684
1536	1574	1625	1667	1756	1574	1574	1651	1676	1715
1567	1611	1668	1716	1817	1611	1611	1697	1727	1770
1586	1633	1695	1747	1856	1633	1633	1726	1757	1804
1619	1673	1743	1802	1925	1673	1673	1778	1813	1866
1718	1788	1881	1959	2122	1788	1788	1928	1975	2045
1752	1828	1929	2014	2191	1828	1828	1980	2031	2108
1814	1900	2017	2113	2317	1900	1900	2075	2132	2220
1850	1944	2069	2173	2392	1944	1944	2131	2193	2288
1918	2024	2165	2282	2529	2024	2024	2234	2304	2410

EYWFD
Desk Edge Screen – Framed Fabric

The Desk Edge Screen – Framed Fabric for freestanding height-adjustable table attaches to the worksurface and provides casual privacy and space division.

WHAT'S INCLUDED
1 screen with mounting bracket and hardware.

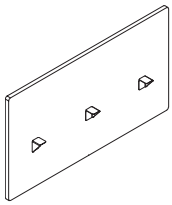

PRODUCT OPTIONS

Height	Width	Screen Finish	Bracket Finish	Frame Finish
11, 13	12, 14, 15, 16, 18	Panel Fabrics	**83** Very White **52** Ebony	**83** Very White **52** Ebony

SAMPLE ORDER CODE

EYWFD 13	**12**	**YB004**	**83**	**52**

DIMENSIONS CODE

H	W
11	12
11	14
11	15
11	16
11	18
13	12
13	14
13	15
13	16
13	18

PRICING

Fabric COM	Gr. 1	Gr. 2
695	695	719
706	706	731
761	761	789
773	773	804
820	820	854
890	890	937
914	914	964
982	982	1039
1006	1006	1067
1088	1088	1157

EYWMS

Modesty Panel for Freestanding Height-Adjustable Table – Solid

The Modesty Panel for Freestanding Height-Adjustable Table – Solid provides seated privacy to hiSpace World Wide Tables.

WHAT'S INCLUDED
1 modesty panel with mounting hardware.

NOTES
Dimensions referenced are nominal.

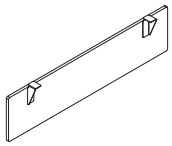

PRODUCT OPTIONS

Height	Width	Corner Profile	Finish	Modesty Finish	Edge Trim Style
04	12, 14, 15, 16, 18	**B** Straight **J** Radius	**83** Very White **52** Ebony	**OK** Oak **WT** Walnut **LW** Light Walnut **MP** Maple **WH** White **SW** Snow White **LG** Light Grey **BH** Beech	**6** Straight Trim

SAMPLE ORDER CODE

EYWMS 04	12	B	83	YQ	6

DIMENSIONS CODE		PRICING
H	W	
04	12	246
04	14	279
04	15	294
04	16	311
04	18	342

E Y W M F

Modesty Panel for Freestanding Height-Adjustable Table – Smooth Felt

The Modesty Panel for Freestanding Height-Adjustable Table – Smooth Felt provides seated privacy to hiSpace world wide Tables.

WHAT'S INCLUDED
1 modesty panel with mounting hardware.

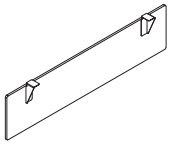

PRODUCT OPTIONS

Height	Width	Corner Profile	Finish	Felt Finish
04	12, 14, 15, 16, 18	**B** Straight **J** Radius	**83** Very White **52** Ebony	**R5** Pewter **R6** Lunar

SAMPLE ORDER CODE

EYWMF 04	**12**	**B**	**83**	**R5**

DIMENSIONS CODE

H	W
04	12
04	14
04	15
04	16
04	18

PRICING

341
341
619
619
619

teknion

www.teknion.com

CAN/US/INT 10-23
©Teknion 2023

®, ™ trade marks of Teknion Corporation and/or its subsidiaries or licensed to it. Patents may be pending.

Some products may not be available in all markets. Contact your local Teknion Representative for availability.