expansion
cityline

price & application guide

01.22.2024

teknion

update summary

Please be advised that information has been updated within the Expansion Cityline Price & Application Guide. To highlight these updates, a summary has been created for your reference.

revised product

The price have been updated on the following product:

- Power Qube (JNEPC)

Please note, first orders for new products will be accepted on January 22, 2024. All software will also be updated by January 22, 2024. If you have any questions regarding the information enclosed, please contact your Teknion Customer Service Representative.

WHAT IS EXPANSION CITYLINE? . . . 6

INDEX 16

APPLICATION GUIDE 25

PRICE & PRODUCT GUIDE. 823

what is expansion cityline?

Inspired by the definitive patterns of the urban landscape, Expansion Cityline is based on the concept of planning for a workplace as diverse and dynamic as a modern city. Like the public and private places where resident dwellers work and play, Expansion Cityline offers a highly active setting that allows people to move, to gather and to disperse when privacy and focus is desired. Expansion Cityline offers two platforms to build on, from an innovative EZ Fence to a unique desk framework that allow to create a wide array of workstation styles.

ez fence

The EZ Fence is specifically designed to enhance the experience in fence applications. As a power distribution fence, Expansion Cityline's EZ Fence integrates with height-adjustable Navigate tables or hiSpace tables, allowing people to easily configure either perpendicular to, or parallel to the casual beam fence.

one structure, three ways to plan

Expansion Cityline offers a comprehensive fence solution creating a spectrum of applications from simple power distribution to multi-functional space division. Its unique aesthetic and minimal hardware allow for a quick install and a competitive price point, making it an attractive solution for both designers and installers.

upper structure

The Upper Structure provides space division up to 66 inches high. Unique Lift and Drop Tiles install without tools.

what is expansion cityline?

engaging workstations

A comprehensive program of accessories and screens addresses the need for creating an engaged working environment. Completed with Height-adjustable tables, elevated credenzas and open shelves, it contributes to employees' wellbeing.

run-off with bevel base

EZ Fence offers seamless integration of a height-adjustable run-off that allows users to alternate between a seated and standing position with ease. A light, open look is achieved by planning multi-layered workstations and dividing spaces with glass screens that maintain a sense of transparency and openness.

what is expansion cityline?

breaking up the space

As a multi-functional product, it can be used to create workstations or freestanding space divider with vertical functionalities.

support media technology

The structure accepts storage units and shelves to create a functional space, and can be used as a media centre with meeting tables to create dynamic collaborative areas.

what is expansion cityline?

add privacy as needed

EZ Fence can be completed with a collection of screens that adapt to all levels of privacy.

floor screen with metal tower

The Metal tower is a signature storage that combines aesthetic and functionality. Different storage format can easily be configured in heads down area or non-assigned workstation with greater privacy and functionality.

what is expansion cityline?

expansion cityline – desk structure platform

With a unique beam framework and robust accessories program, Expansion Cityline Desk Structure is the perfect kit of parts to create workstations and mixed-use areas in which people can feel comfortable and empowered as they pursue individual and collective goals.

unique desk framework

The beam infrastructure maximizes office connectivity, serving as a structural spine and as an avenue for data and power. The Structural beam can either be concealed below a worksurface or fully exposed. Combined with Beam-Mounted Storage, the elevated screens keep a sense of lightness and facilitate focus work without the cubicle feeling.

what is expansion cityline?

multiple direction planning

Expansion Cityline is developed to support a wide variety of configurations by permitting 90° planning in multiple directions, including double- and single-sided formats. Electricity/data flow through the beam along any path, accessible directly or via a power access door, power module and grommets.

what is expansion cityline?

120-degree planning

A 120-degree beam connection creates curved workspaces, and provides users with the natural, organic range of motion to enhance ergonomics. Supplementing the standard-height fence is a low-height fence. Designed to be used with height-adjustable tables, it reduces creepage between the fence and table and, as an integrated modesty panel, affords added privacy.

mix-used areas

Expansion Cityline is a true connection between workstations and casual spaces by seamlessly linking standing-height workspaces, casual lounge seating and task-chair activity in the same area. The structural beam remains the backbone and serves as an avenue for uninterrupted data and power to and through work and social zones.

what is expansion cityline?

workstation lockers

A collection of lockers is designed to blend with Cityline's unique design features such as optional metal doors and signature pull and foot. The lockers also integrate a door numbering system and optional customized digital locks

introduction

where to find the information you need

Teknion provides an array of tools and information resources to help you get things done simply and easily. From product pricing to application guidelines to online planning suggestions, you will find what you need when you need it.

guide contents

This guide contains all the information you need to order this product through your specification software. The Introduction section provides everything you need to get started, including an index for product reference. The Application Guide section contains detailed specification guidelines, application and planning information to help you plan your project correctly. The Price Guide sections provide detailed pricing and specification information by product type. Available online at www.teknion.com.

where to find the information you need

All Teknion marketing materials are available online at www.teknion.com, including:

price & product guide

application guide

planning tool

installation guides

fabrics & finishes

product photography & drawings

weights & volumes

order forms

warranty/terms & conditions of sale

xpress program guide

teknion forms

The following forms are available online at www.teknion.com, to help you specify and place your order if required:

teknipaint
If you require a custom paint color match, you must submit a TekniPaint form.

using your own material (COM)
If you wish to use your own material on fabric-covered products, you must submit a completed COM form including a sample upholstery and safety testing. A COM Order Information Sheet must also be submitted. This form captures all relevant ordering and tracking information. A COM Request for Yardage Calculation form may be sent to Teknion for preliminary yardage requirements.

placing a manual order
Complete an Order Cover Sheet with the information we need to fill your order. This is the most important step. If the Order Cover Sheet is not complete and correct, the order may be delayed.

key requirements

If you require that certain pieces share the same locks you will need to specify Set of Keys Alike (SOKL) located in the Price and Product Guide.

user feedback

How is our marketing material working for you?

Feedback from the user is very important to the quality of Teknion's marketing material. We ask that if you have suggestions on how you think we could improve content OR if you have found an error, that you contact your Teknion Technical Services department.

index

Section Contents	Product Code	Page No.
WHAT IS EXPANSION CITYLINE?		
What is Expansion Cityline?		6
INTRODUCTION		
Where to find the information you need		15
APPLICATION GUIDE		
Understanding Application Guide Pages		29
Expansion Cityline EZ fence structure overview		36
Expansion Cityline EZ fence structure		38
Expansion Cityline EZ fence structure – height-adjustable product compatibilities		39
Expansion Cityline EZ fence structure – creep		40
Understanding EZ fence beams		42
EZ fence beam basics		47
Planning with EZ fence beams		48
Planning with Chicago EZ fence beams		49
Planning with EZ Fence beam covers		50
EZ fence supports overview		52
Understanding EZ fence legs		54
EZ fence leg – low height basics		56
EZ fence leg basics		57
Planning with EZ fence legs		58
Planning with top cover & upper a-frame ready configurations – EZ fence legs		60
Understanding EZ fence post for screen connection		61
EZ fence post for screen connection basics		62
Planning with EZ fence post for screen connection		63
Understanding EZ structural legs		66
EZ structural leg basics		69
Planning with EZ structural legs		70
Planning with top cover & upper a-frame ready configurations – EZ structural legs		76
Understanding EZ upper a-frames		77
EZ a-frame for lift & drop tile and accessory basics		80
EZ upper rail for lift & drop tile basics		81
EZ upper a-frame for laminate shelves basics		82
Planning with EZ upper a-frames		83
Undersatnding run-off for EZ fence		86
Run-off for EZ fence basics		88
Planning with run-off for EZ fence		89
Planning with grommets & cut-outs for EZ fence run-off		93
Grain/pattern direction & edge trim styles – EZ fence run-off		95
EZ fence leg cover – top basics		96
Understanding preconfigured EZ fence structures		100
Preconfigured EZ fence structure basics		102
Understanding lift & drop tiles and vertical poles		108
Understanding lift & drop tiles		109
Lift & drop tiles basics		111
Planning with lift & drop tiles		114
Lift & drop media tile – solid basics		116
Planning with lift & drop media tile – solid		117
Planning with monitor & camera support		121
Understanding lift & drop vertical poles		124
Lift & drop vertical poles basics		125
Understanding accessories – lift & drop vertical poles mounted		126
Accessories – lift & drop vertical poles mounted basics		128
Planning with accessories – lift & drop vertical poles mounted		130
Understanding planter box kit – EZ upper a-frame mounted		134
Planter box kit – EZ upper a-frame mounted basics		135
Planning with planter box kit – EZ upper a-frame mounted		137
Laminate shelves – EZ upper a-frame mounted basics		138
Planning with laminate shelves – EZ upper a-frame mounted		140
Understanding EZ fence screens		146
Add-on Screen – EZ fence beam-mounted basics		148
Planning with add-on screens – EZ fence beam-mounted		154
Elevated Screen – EZ fence beam-mounted basics		155
Planning with width extension for corner applications – elevated screens – EZ fence beam-mounted		158
Planning with elevated screens – EZ fence beam-mounted		159
Modesty or floor screen – EZ fence beam-mounted basics		161
Planning with width extension for corner applications – modesty or floor screens – EZ fence beam-mounted		167
Planning with modesty or floor screens – EZ fence beam-mounted		168
Floor screen – EZ fence post-mounted basics		171
Planning with width reduction for floor screens – EZ fence post-mounted		174
Planning with floor screens – EZ fence post-mounted		175
Floor screen with Metal Tower – EZ fence post-mounted basics		176
Planning with width reduction for floor screen with metal towers – EZ fence post-mounted		179
Planning with floor screen with metal towers – EZ fence post-mounted		180
Drawer widths & lock chart – floor screen with metal towers – EZ fence post-mounted		182
Understanding EZ suspended storage		186
EZ suspended credenza basics		187
Planning with EZ Suspended Credenzas		190
Planning with beam-mounted storage		193
Planning power & data – EZ suspended storage – media center – single-sided		195
Drawers & opening sizing chart – EZ suspended credenza		196
Integrating accessories (optional) – EZ suspended credenza		199
Lock chart – EZ suspended credenza		200
EZ suspended shelf basics		201
Grain direction – EZ suspended storage		202
Understanding desk structures		211
Understanding structural beams		214
Structural beams basics		217
Planning with structural beam		218
Planning with Chicago structural beam		219
Understanding structural post		220
Structural post basics		224
Planning with structural post		225
Understanding structural leg & structural post with front leg		234
Structural leg basics		239

index

Section Contents	Product Code	Page No.
Planning with full depth structural leg		240
Planning with exposed structural legs		242
Planning with recess depth structural leg		244
Structural post with front leg basics		249
Understanding structural post with front leg		250
Planning with structural post with front leg		252
Understanding supporting storage		256
Planning with end storage structural post – supporting storage		258
Planning with in-line structural post – supporting storage		259
Planning with in-line structural post with front leg – supporting storage		263
Bench stabilizer basics		264
Wall anchored stabilizer for structure basics		265
Planning with wall anchored stabilizer for structure		266
Table attached stabilizer for structure basics		267
Planning with table attached stabilizer for structure		268
Understanding low structural leg – fence		270
Low structural leg – fence basics		272
Planning with low structural leg – fence		273
Understanding structural leg – fence		276
Structural leg – fence basics		278
Planning with structural leg – fence		279
Understanding structural leg – beam-mounted cabinet		282
Understanding structural leg – peninsula		284
Structural leg – beam-mounted cabinet & peninsula basics		285
Planning with structural leg – beam-mounted cabinet		286
Planning with structural leg – peninsula		287
Understanding structural beam covers		289
Structural beam cover basics		290
Bottom kit for structural beam basics		291
Planning with bottom kit for structural beam		292
Planning with structural beam cover – side		293
Planning with width reduction for structural beam cover – side		295
Planning with structural beam cover – top		301
Planning with width reduction for structural beam cover – top		303
Planning with bottom wire cover for structural beam – standard		306
Planning with structural post cover – top		307
Planning with structural leg cover – top & structural leg bracket for worksurface		308
Understanding worksurfaces		312
Standard worksurface basics		313
Planning with standard worksurfaces		317
Exposed beam worksurface basics		320
Planning with exposed beam worksurfaces		324
Planning with worksurfaces		327
Planning with access doors, grommets & cut-outs		330
Planning screen mounting holes		342
High peninsula worksurface basics		344
Planning with high peninsula worksurface		346
Grain/pattern direction – worksurface		348
Worksurface bracket basics		350
Planning with worksurface bracket		351
Understanding height-adjustability		360
Height-adjustable run-off overview		364
Run-off adjustment range		365
hiSpace height-adjustable tables overview		366
hiSpace tables adjustment range		367
Navigate height-adjustable tables overview		369
Navigate tables adjustment range		370
Table switches		371
Height-adjustable run-off – bevel base basics		372
Planning with height-adjustable run-off – bevel base		374
Planning grommets & cut-outs on height-adjustable run-off		377
hiSpace worksurface with quick connect kit basics		378
Worksurface for Navigate base basics		379
Planning with hiSpace or Navigate worksurfaces		380
Planning with worksurface cut-outs for hiSpace or Navigate height-adjustable tables		384
Grain/pattern direction & edge trim styles – hiSpace or Navigate worksurfaces		387
hiSpace quick connect height-adjustable mechanism basics		388
Planning with hiSpace quick connect height-adjustable mechanisms		389
Planning with width configurations for hiSpace quick connect height-adjustable mechanisms		391
Planning with height-adjustable table screens for hiSpace height-adjustable tables		393
Planning with hiSpace worksurfaces & quick connect height-adjustable mechanisms		394
Navigate height-adjustable base basics		395
Planning with Navigate height-adjustable bases		396
Planning with width configurations for Navigate height-adjustable bases		398
Planning with height-adjustable table screens for Navigate height-adjustable tables		400
Planning with worksurfaces & Navigate height-adjustable bases		401
Wire management for hiSpace or Navigate height-adjustable tables		402
Understanding storage cabinet for height-adjustable run-off		405
Storage cabinet for height-adjustable run-off basics		406
Planning with storage cabinet for height-adjustable run-off		407
Storage cabinet capacities		408
Grain/pattern directions – storage cabinet		409
Understanding meeting tables		412
Laminate meeting table basics		413
Writable glass meeting table basics		414
Grain/pattern direction – meeting table		413
Meeting tables power & data basics		417
Understanding freestanding supports		420
Freestanding support basics		425
Planning with freestanding legs		427
Planning with freestanding leg – lateral cabinet		428
Planning with freestanding leg – peninsula		429
Planning with peninsula monopod base		431
Understanding modesty panels		432
Modesty panel basics		434
Planning with suspended modesty panels		435

index

Section Contents	Product Code	Page No.
Planning with beam-mounted modesty panel		437
Understanding workstation screens		446
Add-on screen beam- or worksurface-mounted basics		447
Understanding width reduction for lateral application – worksurface-mounted		450
Planning with add-on screen – worksurface-mounted		454
Understanding width reduction for add-on screen – beam-mounted		458
Planning with add-on screen – beam-mounted		460
Glass edge screen – worksurface-mounted basics		463
Planning with glass edge screen – worksurface-mounted		464
Elevated screen – beam- or worksurface-mounted basics		466
Understanding beam- or worksurface-mounted mounting style for elevated screens		470
Understanding width extension for corner application – elevated screens – beam- or worksurface-mounted		472
Understanding elevated screen – beam- or worksurface-mounting style specification		473
Planning with elevated screens – beam- or worksurface-mounted		475
Felt corner elevated screen basics		479
Understanding beam- or worksurface-mounting style for felt corner elevated screen		481
Planning with felt corner elevated screens		482
Felt end screen – worksurface-mounted basics		483
Planning with felt end screen – worksurface-mounted		484
Floor screen – beam- or worksurface-mounted basics		485
Understanding beam- or worksurface-mounting style for floor screens		488
Understanding width extension for corner application – floor screens – beam- or worksurface-mounted		489
Understanding floor screen – beam- or worksurface-mounting style specification		490
Planning with floor screens – beam- or worksurface-mounted		492
Planning with floor screens – worksurface-mounted – cable pass-through		497
Screen accessory basics		498
Planning with linking devices		499
Understanding leg-mounted screens		506
Elevated screen – leg-mounted basics		507
Understanding leg-mounting style for elevated screens		509
Understanding width extension for corner application for elevated screens – leg-mounted		510
Planning with elevated screens – leg-mounted		511
Floor screen – leg-mounted basics		513
Understanding leg-mounting style for floor screens		515
Understanding width extension for corner application for floor screens – leg-mounted		517
Planning with floor screens – leg-mounted		518
Planning with floor screens – leg-mounted – cable pass-through		520
Planning with linking device for elevated or floor screens – leg-mounted		521
Floor screen with metal towers – leg-mounted basics		522
Understanding leg-mounting style for floor screen with metal towers		526
Understanding width extension for corner application for floor screen with metal towers – leg-mounted		527
Planning with floor screen with metal towers – leg-mounted		528
Drawer widths & lock chart – floor screen with metal towers – leg-mounted		530
Understanding height-adjustable table screens		534
Add-on screen – height-adjustable table mounted basics		535
Understanding width reduction for lateral application – height-adjustable table mounted		537
Glass edge screen – height-adjustable table mounted basics		538
Planning with glass edge screen height-adjustable table mounted		539
Elevated screen – height-adjustable table mounted basics		540
Understanding mounting style for metal or infinity elevated screens – height-adjustable mounted		544
Understanding width extension for corner application – elevated screens – height-adjustable table mounted		545
Planning with elevated screens – height-adjustable table mounted		546
Felt edge screen – height-adjustable table mounted basics		549
Planning with felt edge screen – height-adjustable table mounted		550
Understanding casual screens		554
Floor screens – freestanding basics		555
Planning floor screens – freestanding		556
Functional screen basics		559
Sit & slide screen basics		560
Planning with sit & slide screens		561
Casual board basics		565
Planning with casual boards		566
Accessory screen basics		570
Understanding beam-mounted storage		574
Suspended storage basics		575
Planning with suspended storage		576
Suspended credenza basics		578
Planning with suspended credenzas		580
Drawer & opening sizing chart – suspended storage		588
Integrating accessories (optional) – suspended credenza		593
Lock chart – suspended storage		594
Beam-mounted cabinet basics		596
Planning with beam-mounted cabinets		597
Understanding beam-mounted storage – fence		600
Beam-mounted storage – fence basics		601
Planning with shelves		602
Planning with lateral hang-on cabinets		607
Grain direction – beam-mounted storage		609
Understanding mounted storage		612
Elevated desk shelf basics		616
Planning with elevated desk shelf		617
Elevated cabinet with sliding doors basics		618
Elevated slim cabinet basics		619
Desktop cabinet basics		620
Planning with elevated desk shelf, elevated cabinets with sliding doors, elevated slim & desktop cabinets		622
Lateral desktop cabinet basics		624

index

Section Contents	Product Code	Page No.
Planning with lateral desktop cabinet		625
Lock chart – mounted storage		626
Grain direction – mounted storage		627
Understanding mobile credenza		630
Mobile credenza basics		631
Understanding freestanding credenzas		632
Freestanding credenza basics		633
Drawer widths – mobile & freestanding credenza		637
Planning with mobile credenzas		643
Planning with freestanding credenzas		644
Integrating accessories (optional) – mobile & freestanding credenza		647
Lock chart – mobile & freestanding credenza		649
Grain direction – mobile & freestanding credenza		650
Understanding freestanding storage		654
Underworksurface freestanding storage basics		655
Planning with underworksurface freestanding storage		658
Beam tower basics		661
Planning with beam towers		666
High freestanding storage basics		668
Freestanding tower basics		669
Planning with high freestanding storage & freestanding towers		674
Drawer widths – freestanding storage		675
Filing drawer capacities – freestanding storage		676
Lock chart – freestanding storage		677
Grain direction – freestanding storage		679
Understanding lockers		684
Lockers basics		687
Planning with lockers		692
Understanding recycling/disposal units		699
Recycling/disposal unit basics		701
Planning with recycling/disposal units		704
Angled foot sharing applications – elevated lockers & recycling/disposal units		708
Digital lock details		712
Digital lock key basics		713
Pull, standard lock & digital lock positions – lockers & recycling/disposal units		714
Lock chart – lockers & recycling/disposal units		716
Grain direction – lockers & recycling/disposal units		718
Lockers number & locker symbol basics		719
Planning with locker numbers & locker symbols		721
Understanding accessories		726
Suspended personal storage basics		727
Planning with suspended personal storage		730
Drawer modules, tray module & utility box basics		732
Planning with drawer & tray modules		733
Metal screen accessories basics		734
Planning with metal screen accessories		735
Freestanding planter box & planter liners basics		737
Planning with planter box & planter liners		738
Linear LED light support basics		740
Table Companion marker kit basics		741
Box drawer organizer basics		742
File drawer organizer basics		743
Planning with file drawer organizers		744
Boot tray basics		745
Seat pad or seat cushion basics		746
Planning with seat pad & seat cushion		747
Beam-mounted seat pad & accessories basics		749
Planning with beam-mounted seat pad & accessories		750
Under beam- or worksurface-mounted hook basics		753
Planning with under beam- or worksurface-mounted hook		754
Dry-erase kit & rare earth magnet kit basics		755
Lighting, electrics & communications overview		760
Lighting basics		761
Beam-mounted power & communications basics		762
Understanding data/communications		763
Chicago beam-mounted power & communications basics		765
Understanding Chicago data/communications		766
Power entry basics		770
Planning with power entry		772
Power distribution basics		786
Chicago distribution basics		788
Planning with power distribution		789
Power distribution for height-adjustable run-off basics		797
Planning with standard or Chicago power distribution for height-adjustable run-off		798
Planning with standard power distribution for height-adjustable run-off		799
Planning with standard power distribution for hiSpace or Navigate height-adjustable tables		801
Power harness length with standard power distribution for height-adjustable run-off		808
Wiring systems		811
Planning with Chicago power distribution for height-adjustable run-off		812
Power & communications management & user access		815
EZ FENCE STRUCTURE		
EZ Fence Beam	JZSBB	828
EZ Fence Beam for Corridor	JZSBS	829
EZ Fence Leg – Low Height	JZSFL	830
EZ Fence Leg	JZSFS	831
EZ Fence Post with Screen Connection	JZSPS	832
EZ Structural Leg – Single-Sided	JZSLS	833
EZ Structural Leg – Double-Sided	JZSLD	834
EZ Upper A-Frame – Shared	JZSUD	835
EZ Upper A-Frame – Single-Sided	JZSUS	836
EZ Upper Rail for Lift and Drop Tile	JZSUR	837
EZ Upper A-Frame for Laminate Shelves – Shared	JZSULS	838
Chicago EZ Fence Beam	JZSCB	839
Chicago EZ Fence Beam for Corridor	JZSCS	840
Run-Off for EZ Fence	JZWRF	842

index

Section Contents	Product Code	Page No.
EZ Fence Leg Cover – Top	JZSLC	844
preconfigured ez fence structure		
EZ Fence for Lift and Drop Tile – Shared	JZPD	848
EZ Fence for Lift and Drop Tile – Single-Sided	JZPS	849
EZ Fence for Lift and Drop Tile – Single-Sided for Corridor	JZPB	850
EZ Fence for Lift and Drop Tile – Low Shared	JZPLD	851
ez lift & drop tiles and shelves		
Lift and Drop Tile – Solid	JZTSH	856
Lift and Drop Tile – Solid Vertical Grain	JZTSV	858
Lift and Drop Tile – Fabric	JZTF	860
Lift and Drop Tile – Felt	JZTEL	862
Lift and Drop Tile – Cork	JZTC	864
Lift and Drop Tile – Metal Accessory	JZTMA	866
Lift and Drop Tile – Metal Makerboard	JZTMW	867
Lift and Drop Tile – Frosted Glass	JZTGG	868
Lift and Drop Tile – Writable Magnetic Glass	JZTGM	870
Lift and Drop Media Tile – Solid	JZTSM	871
Lift and Drop Vertical Poles	JZTPS	872
Accessories – Lift and Drop Vertical Poles Mounted	JZTPA	873
Planter Box Kit – EZ Upper A-Frame Mounted	JZAPU	874
Laminate Shelves – EZ Upper A-Frame Mounted	JZTBS	875
ez fence screens		
Solid Add-On Screen – EZ Fence Beam-Mounted	JZSASB	881
Glass Add-On Screen – EZ Fence Beam-Mounted	JZSAGB	882
Infinity Add-On Screen – EZ Fence Beam-Mounted	JZSAXB	886
Fabric Add-On Screen – EZ Fence Beam-Mounted	JZSAFB	890
Smooth Felt Add-On Screen – EZ Fence Beam-Mounted	JZSAZB	893
Felt Add-On Screen – EZ Fence Beam-Mounted	JZSAEB	894
Solid Elevated Screen – EZ Fence Beam-Mounted	JZSESB	896
Fabric Elevated Screen – EZ Fence Beam-Mounted	JZSEFB	898
Felt Elevated Screen – EZ Fence Beam-Mounted	JZSEEB	899
Solid Modesty Screen – EZ Fence Beam-Mounted	JZSMSB	900
Floor Screen – EZ Fence Beam-Mounted	JZSFSB	901
Floor Screen with Glass – EZ Fence Beam-Mounted	JZSFGB	902
Floor Screen – EZ Fence Post-Mounted	JZSFSP	908
Floor Screen with Glass – EZ Fence Post-Mounted	JZSFGP	910
Floor Screen with Tower – Open – EZ Fence Post-Mounted	JZSFOP	912
Floor Screen with Tower – One Drawer – EZ Fence Post-Mounted	JZSFDP	914
Floor Screen with Tower – Two Drawers – EZ Fence Post-Mounted	JZSFTP	916
ez suspended storage		
EZ Suspended Credenza – Lateral File and Cubby – Shared	JZBSO	920
EZ Off Module Suspended Credenza – Lateral File and Cubby – Shared	JZBDO	922
EZ Suspended Credenza – Lateral File – Single-Sided	JZBFF	924
EZ Suspended Credenza – Media Center – Single-Sided	JZBSM	926
EZ Suspended Shelf – Solid	JZBSH	928

Section Contents	Product Code	Page No.
desk structures		
Structural Beam	JNDBB	934
Chicago Structural Beam	JNDCB	935
Structural Post	JNDPU	936
Structural Post – 120°	JNDPY	937
Low Structural Post – 120°	JNDPLY	938
Structural Post with Front Leg	JNDPF	939
Structural Leg – Single-Sided	JNDLS	940
Structural Leg – Double-Sided	JNDLD	942
Structural Leg – Fence	JNDLF	944
Structural Leg – Beam-Mounted Cabinet	JNDLL	945
Structural Leg – Peninsula	JNDLP	946
Low Structural Leg – Fence	JNDLLF	947
Structural Beam Cover – Side	JNDBCS	948
Structural Beam Cover – Top	JNDBTC	949
Bottom Wire Cover for Structural Beam – Standard	JNDBCB	950
Bottom Kit for Structural Beam	JNDBK	951
Wall Anchored Stabilizer for Structure	JNDSWB	952
Table Attached Stabilizer for Structure	JNDST	953
Bench Stabilizer	JNDBS	954
Structural Post Cover – Top	JNDCPT	955
Structural Leg Cover – Top	JNDLC	956
Structural Leg Bracket for Worksurface	JNDLW	957
worksurfaces		
Single-Sided Rectangular Worksurface	JNWSSN	962
Single-Sided Rectangular Worksurface – Exposed Beam	JNWRSE	966
Single-Sided Rectangular Worksurface – Cross Grain	JNWSCN	970
Single-Sided Rectangular Worksurface – Cross Grain – Exposed Beam	JNWSCE	974
Double-Sided Rectangular Worksurface	JNWDSN	978
Double-Sided Rectangular Worksurface – Exposed Beam	JNWDSE	984
Double-Sided Rectangular Worksurface – Cross Grain	JNWDCN	990
Peninsula Worksurface	JNWPSN	994
Peninsula Worksurface – Exposed Beam	JNWPSE	995
Peninsula Worksurface – Cross Grain	JNWPCN	996
Peninsula Worksurface – Cross Grain – Exposed Beam	JNWPCE	997
High Peninsula Worksurface	JNWPH	998
Writable Glass Peninsula Worksurface – Worksurface Connected	JNWPGN	999
Writable Glass Peninsula Worksurface – Exposed Beam	JNWPGE	1000
Double-Sided Writable Glass Worksurface	JNWDG	1001
Writable Glass Worksurface – Center Beam-Mounted	JNWFG	1002
Worksurface Reinforcement Channel	JNWRC	1003
Beam-Mounted Worksurface Brackets	JNWBB	1004
Linking Plates	JNWFP	1004
height-adjustability		
Height-Adjustable Run-Off – Bevel Base	JNHB	1010
Storage Cabinet for Height-Adjustable Run-Off	JNHSC	1012

index

Section Contents	Product Code	Page No.
hiSpace Quick Connect Height-Adjustable Mechanism – Rectangular (One Table One Plug)	JNXRMH	1014
hiSpace Rectangular Worksurface with Quick Connect Kit	JNXRW	1016
hiSpace Rectangular Worksurface with Quick Connect Kit – Cross Grain	JNXCRW	1018
hiSpace Quick Connect 120° Height-Adjustable Mechanism (One Table One Plug)	JNXH	1020
hiSpace 120° Worksurface with Quick Connect Kit	JNXV	1022
Navigate Height-Adjustable Base – Rectangular	JNHTRF	1024
Rectangular Worksurface for Navigate Base	JNHWRF	1028
Rectangular Worksurface for Navigate Base – Cross Grain	JNHCWRF	1030
Navigate Height-Adjustable Base – 120°	JNTV	1032
120° Worksurface for Navigate Base	JNHV	1034
Height-Adjustable Table Caster Kit	JNHCA	1036
Vertical Wire Carrier	JNHEA	1037
tables		
Round Meeting Table – Blade Star Base	JNTOSB	1040
Square Meeting Table – Blade Star Base	JNTSSB	1041
Square Writable Glass Meeting Table – Blade Star Base	JNGSSB	1042
desk accessories		
Freestanding Leg – Single-Sided	JNALS	1046
Freestanding Leg – Double-Sided	JNALD	1047
Freestanding Leg – Lateral Cabinet	JNALL	1048
Freestanding Leg – Peninsula	JNALP	1049
Peninsula Monopod Base – Round	JNAPP	1050
Suspended Modesty Panel – Glass	JNASMG	1051
Suspended Modesty Panel – Solid	JNASML	1052
Beam-Mounted Modesty Panel – Solid	JNABMS	1053
workstation screens		
Solid Add-On Screen – Beam-Mounted	JNSASB	1060
Solid Add-On Screen – Worksurface-Mounted	JNSASW	1062
Glass Add-On Screen – Beam-Mounted	JNSAGB	1064
Glass Add-On Screen – Worksurface-Mounted	JNSAGW	1066
Fabric Add-On Screen – Beam-Mounted	JNSAFB	1068
Fabric Add-On Screen – Worksurface-Mounted	JNSAFW	1070
Felt Add-On Screen – Beam-Mounted	JNSABE	1072
Felt Add-On Screen – Worksurface-Mounted	JNSAEW	1074
Glass Edge Screen – Worksurface-Mounted	JNSWGW	1076
Solid Elevated Screen – Beam-Mounted	JNSESB	1078
Solid Elevated Screen – Worksurface-Mounted	JNSESW	1080
Glass Elevated Screen – Beam-Mounted	JNSEGB	1084
Glass Elevated Screen – Worksurface-Mounted	JNSEGW	1086
Fabric Elevated Screen – Beam-Mounted	JNSEFB	1088
Fabric Elevated Screen – Worksurface-Mounted	JNSEFW	1090
Felt Elevated Screen – Beam-Mounted	JNSEEB	1094
Felt Elevated Screen – Worksurface-Mounted	JNSEEW	1096
Felt Corner Elevated Screen	JNSECF	1098
Felt End Screen – Worksurface-Mounted	JNSELE	1100
Floor Screen – Beam-Mounted	JNSFSB	1102
Floor Screen – Worksurface-Mounted	JNSFSW	1104
Floor Screen with Glass – Beam-Mounted	JNSFGB	1106
Floor Screen with Glass – Worksurface-Mounted	JNSFGW	1110
Linking Strip for Glass Screen	JNSLS	1116
Worksurface Retrofit Cover	JNSWRC	1117
leg-mounted screens		
Solid Elevated Screen – Leg-Mounted	JNSESL	1122
Glass Elevated Screen – Leg-Mounted	JNSEGL	1124
Fabric Elevated Screen – Leg-Mounted	JNSEFL	1126
Felt Elevated Screen – Leg-Mounted	JNSEEL	1128
Floor Screen – Leg-Mounted – One User	JNSFSL	1130
Floor Screen – Leg-Mounted – Two Users	JNSFST	1132
Floor Screen with Glass – Leg-Mounted – One User	JNSFGO	1134
Floor Screen with Glass – Leg-Mounted – Two Users	JNSFGT	1138
Floor Screen with Metal Tower – Open – Leg-Mounted – One User	JNSFOL	1142
Floor Screen with Metal Tower – Open – Leg-Mounted – Two Users	JNSFOT	1144
Floor Screen with Metal Tower – One Drawer – Leg-Mounted – One User	JNSFDL	1146
Floor Screen with Metal Tower – One Drawer – Leg-Mounted – Two Users	JNSFDT	1148
Floor Screen with Metal Tower – Two Drawers – Leg-Mounted – One User	JNSFTL	1150
Floor Screen with Metal Tower – Two Drawers – Leg-Mounted – Two Users	JNSFTT	1152
height-adjustable table screens		
Solid Add-On Screen – Height-Adjustable Table Mounted	JNSASH	1158
Glass Add-On Screen – Height-Adjustable Table Mounted	JNSAGH	1160
Fabric Add-On Screen – Height-Adjustable Table Mounted	JNSAFH	1162
Felt Add-On Screen – Height-Adjustable Table Mounted	JNSAEH	1164
Glass Edge Screen – Height-Adjustable Table Mounted	JNSWGH	1166
Solid Elevated Screen – Height-Adjustable Table Mounted	JNSESH	1168
Metal Lateral Elevated Screen – Height-Adjustable Table Mounted	JNSMLH	1170
Metal Back Elevated Screen – Height-Adjustable Table Mounted	JNSMEH	1171
Metal Corner Elevated Screen – Height-Adjustable Table Mounted	JNSMCH	1172
Infinity Lateral Elevated Screen – Height-Adjustable Table Mounted	JNSXLH	1174
Infinity Back Elevated Screen – Height-Adjustable Table Mounted	JNSXEH	1176
Infinity Corner Elevated Screen – Height-Adjustable Table Mounted	JNSXCH	1178
Fabric Elevated Screen – Height-Adjustable Table Mounted	JNSEFH	1180
Felt Elevated Screen – Height-Adjustable Table Mounted	JNSEEH	1182
Felt End Screen – Height-Adjustable Table Mounted	JNSELEH	1184

index

Section Contents	Product Code	Page No.
casual screens & accessories		
Floor Screen – Freestanding	JNSFSF	1190
Floor Screen with Glass – Freestanding	JNSFGF	1191
Functional Screen – Metal	JNSFM	1193
Sit and Slide Screen – Metal	JNSSM	1194
Sit and Slide Screen – Felt	JNSSE	1195
Sit and Slide Screen with Accessories – Metal	JNSSA	1196
Casual Board – Glass	JNSCG	1197
Casual Board – Felt	JNSCE	1198
Floor Screen Hook	JNSSH	1199
Markerboard Tray	JNSMT	1200
beam-mounted storage		
Suspended Pedestal – File Drawer	JNBP	1206
Suspended Cubby	JNBC	1208
Suspended Credenza – Lateral File	JNBSF	1210
Semi-Suspended Credenza – Lateral File	JNBDF	1212
Suspended Credenza – Open with Lateral File	JNBSO	1214
Semi-Suspended Credenza – Open with Lateral File	JNBDO	1216
Suspended Credenza – Open	JNBSOO	1218
Semi-Suspended Credenza – Open	JNBDOO	1220
Suspended Credenza – Open with Combo File	JNBSC	1222
Semi-Suspended Credenza – Open with Combo File	JNBDC	1224
Suspended Shelf – Solid	JNBSH	1226
Beam-Mounted Shelf	JNBBW	1227
Beam-Mounted Cabinet – Open	JNBBLO	1228
Lateral Hang-On Cabinet – Open	JNBDLO	1230
mounted storage		
Elevated Desk Shelf	JNMES	1235
Elevated Cabinet – Overlay Sliding Door – Glass	JNMELG	1236
Elevated Cabinet – Overlay Sliding Door – Solid	JNMELS	1238
Elevated Slim Cabinet – Open	JNMSO	1240
Lateral Desktop Cabinet – Open	JNMLO	1242
Desktop Cabinet – Sliding Doors	JNMDS	1244
Desktop Cabinet – Open	JNMDO	1248
credenzas		
Mobile Credenza – Open with Drawers	JNFC	1254
Freestanding Credenza – Lateral File	JNFCLL	1256
Freestanding Credenza – Open with Lateral File	JNFCOL	1258
Freestanding Credenza – Open	JNFCOO	1260
Freestanding Credenza – Open with Combo File	JNFCOC	1262
freestanding storage		
Mobile Pedestal	JNFPM	1268
Mobile Pedestal with Seat – Felt	JNFMP	1269
Pedestal	JNFPS	1270
Combo Pedestal	JNFCP	1272
Lateral File	JNFLF	1274
Bookcase with Metal Dividers	JNFBM	1276
Bookcase	JNFBL	1277
Beam Tower with Drawers – Lateral Access	JNFBPL	1278
Beam Tower with Drawers and Wardrobe – Front Access	JNFBWF	1280
Beam Tower with Full Solid Door	JNFBS	1282
Beam Tower with Full Glass Door	JNFBG	1284
Dual Beam Tower with Full Solid Doors	JNFBDS	1286
Freestanding Tower with Drawers – Lateral Access	JNFTPL	1288
Freest. Tower with Drawers and Wardrobe – Front Access	JNFTWF	1290
Freestanding Tower with Full Solid Door	JNFTS	1292
Freestanding Tower with Full Glass Door	JNFTG	1293
Freestanding Tower with Two Full Solid Doors	JNFTTS	1294
Supporting Storage Kit	JNFKS	1296
Lateral Linking Plates	JNFKL	1296
Hang-On Kit	JNFKH	1297
Hanging File Bar	JNFALB	1298
Locks & Keys	K	1299
Set of Keys Alike	SOKL	1300
lockers		
Locker – Full Doors	JLFFD	1306
Locker – Two-High Cubby	JLFC2	1312
Locker – Three-High Cubby	JLFC3	1318
Locker – Full Glass Doors	JLFFG	1322
Open Locker – Two-High Cubby	JLFB2	1324
Open Locker – Three-High Cubby	JLFB3	1325
Common Locker – Full Doors	JLFSD	1326
Common Locker – Full Glass Doors	JLFSG	1328
Recycling/Disposal Unit	JLFRU	1330
Recycling/Disposal Unit with Storage	JLFRS	1332
Elevated Locker – Full Doors	JLEFD	1334
Elevated Locker – Two-High Cubby	JLEC2	1340
Elevated Locker – Three-High Cubby	JLEC3	1346
Elevated Locker – Full Glass Doors	JLEFG	1350
Elevated Open Locker – Two-High Cubby	JLEB2	1352
Elevated Open Locker – Three-High Cubby	JLEB3	1353
Elevated Common Locker – Full Doors	JLESD	1354
Elevated Common Locker – Full Glass Doors	JLESG	1356
Elevated Recycling/Disposal Unit	JLERU	1358
Angled Foot Kit for Elevated Locker	JLEFK	1360
Locker Number	JLANN	1361
Recycling/Disposal Unit Symbol	JLASR	1362
Common Locker Symbol	JLASS	1363
Digital Lock Key	JLKEE	1364
accessories		
Suspended Personal Storage – Open/Drawer	JNAUOD	1371
Suspended Personal Storage – Door	JNAUED	1372
Drawer Module	JNAMD	1374
Tray Module	JNAMT	1375
Metal Screen Accessories	JNAPM	1376
Utility Box	JNAUB	1377
Freestanding Planter Box	JNAPF	1378
Planter Liner	JNAPEL	1379

index

Section Contents	Product Code	Page No.
Linear LED Light Support	JNASL	1380
Table Companion Marker Kit	JNAMK	1381
Dry-Erase Pads for Companion Marker Holder	JNAME	1382
Box Drawer Organizer	JNAOS	1383
File Drawer Organizer	JNASO	1384
Boot Tray	JNABT	1385
Seat Pad – Felt	JNACF	1387
Seat Cushion – Fabric	JNACU	1388
Beam-Mounted Seat Pad	JNABCF	1390
Bag Drop – Beam-Mounted	JNABAB	1391
Side Tray – Beam-Mounted	JNABAS	1392
Tablet Support – Beam-Mounted	JNABAT	1393
Hook	JNABH	1394
Dry-Erase Kit	JNAEK	1395
Rare Earth Magnet Kit	JNARM	1396
lighting, electrics & communications		
Linear LED Light	JNELED	1404
Access Door	JNEAD	1405
Single Wire Management Clips	JNEWCS	1406
Dual Wire Management Clips	JNEWC	1407
Cable Tray	JNEWPT	1407
Felt Cover Cable Organizer	JNEWYA	1408
Cable Tray for Access Door	JNEWMT	1409
Communication Box	JNECB	1409
Facing Down Communication Box	JNECDB	1410
Communication Extender Plate	JNEDE	1411
Communication Blank Plate	JNECBP	1412
Power Qube	JNEPC	1414
Power Pill	JNETPP	1416
Linear Power Module	JNETLP	1417
Underworksurface Plug-In Power Bar	JNEPP	1418
Power Box	JNEPB	1419
Chicago Power Box	JNECPB	1420
Power Module – Storage for Height-Adjustability	JNEPMH	1422
Chicago Power Module – Storage for Height-Adjustability	JNECPH	1424
Receptacle Outlet	JNEPRO	1425
Four-Way Splitter	JNEPDB	1426
i-Connector	JNEPIC	1427
Chicago Junction Box	JNECJB	1428
Power Harness	JNEPH	1429
Base Feed	JNEPBF	1430
Split Base Feed	JNESBF	1431
Ceiling Feed	JNEPCF	1432
Power Pole	JNEWPP	1433
Wrap Around Cable Manager	JNEWAC	1434
Square Grommet	JNEGQ	1435
Rectangular Grommet	JNEGR	1436
Cable Pass-Through Cover	JNEGPC	1437
USB/Data Faceplate Kit	JNECFK	1438

application guide

application guide

EZ FENCE STRUCTURE 31

PRECONFIGURED EZ FENCE STRUCTURE 99

EZ LIFT & DROP TILES AND SHELVES 105

EZ FENCE SCREENS 143

EZ SUSPENDED STORAGE 185

DESK STRUCTURES 205

WORKSURFACES 311

HEIGHT-ADJUSTABILITY 355

TABLES 411

DESK ACCESSORIES 419

WORKSTATION SCREENS 441

LEG-MOUNTED SCREENS 503

HEIGHT-ADJUSTABLE TABLE SCREENS 533

application guide (continued)

CASUAL SCREENS & ACCESSORIES 553

BEAM-MOUNTED STORAGE 573

MOUNTED STORAGE 611

CREDENZAS. 629

FREESTANDING STORAGE 653

LOCKERS. 681

ACCESSORIES 723

LIGHTING, ELECTRICS & COMMUNICATIONS. 757

understanding application guide pages

This application guide will include the following types of pages.

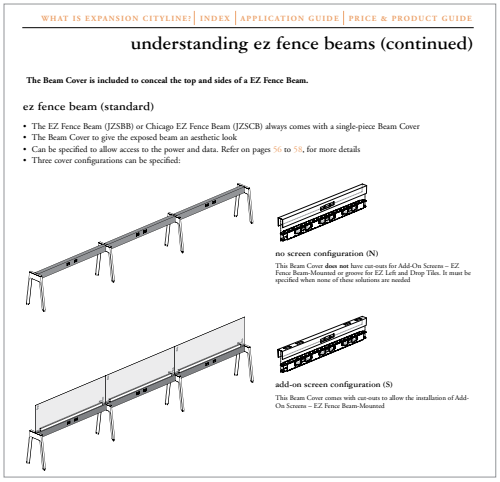
WHAT IS EXPANSION CITYLINE? | INDEX | APPLICATION GUIDE | PRICE & PRODUCT GUIDE

understanding ez fence beams (continued)

The Beam Cover is included to conceal the top and sides of a EZ Fence Beam.

ez fence beam (standard)

- The EZ Fence Beam (JZSBB) or Chicago EZ Fence Beam (JZSCB) always comes with a single-piece Beam Cover
- The Beam Cover to give the exposed beam an aesthetic look
- Can be specified to allow access to the power and data. Refer on pages 56 to 58, for more details
- Three cover configurations can be specified:

no screen configuration (N)

This Beam Cover **does not** have cut-outs for Add-On Screens – EZ Fence Beam-Mounted or groove for EZ Left and Drop Tiles. It must be specified when none of these solutions are needed

add-on screen configuration (S)

This Beam Cover comes with cut-outs to allow the installation of Add-On Screens – EZ Fence Beam-Mounted

understanding pages

Used to describe the intent and common features of a group of products.

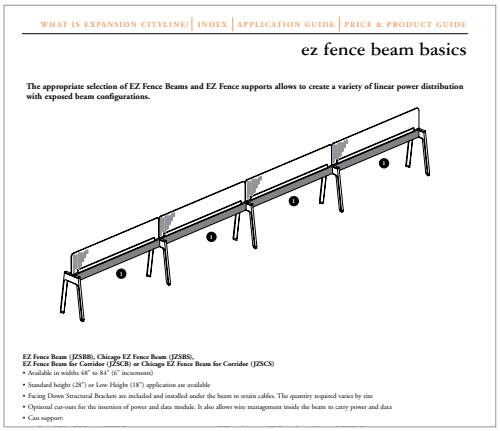
WHAT IS EXPANSION CITYLINE? | INDEX | APPLICATION GUIDE | PRICE & PRODUCT GUIDE

ez fence beam basics

The appropriate selection of EZ Fence Beams and EZ Fence supports allows to create a variety of linear power distribution with exposed beam configurations.

EZ Fence Beam (JZSBB), Chicago EZ Fence Beam (JZSBS), EZ Fence Beam for Corridor (JZSCB) or Chicago EZ Fence Beam for Corridor (JZSCS)

- Available in widths 48" to 84" (6" increments)
- Standard height (28") or Low Height (18") application are available
- Facing Down Structural Brackets are included and installed under the beam to retain cables. The quantity required varies by size
- Optional cut-outs for the insertion of power and data module. It also allows wire management inside the beam to carry power and data
- Can support:

basics pages

Used to describe the details of each individual product including:

- Product codes
- Dimensions
- Options
- Features
- Links to the price page

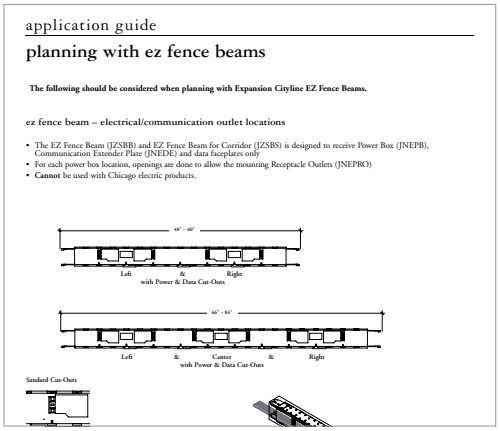
application guide

planning with ez fence beams

The following should be considered when planning with Expansion Cityline EZ Fence Beams.

ez fence beam – electrical/communication outlet locations

- The EZ Fence Beam (JZSBB) and EZ Fence Beam for Corridor (JZSBS) is designed to receive Power Box (JNEPB), Communication Extender Plate (JNEDE) and data faceplates only
- For each power box location, openings are done to allow the mounting Receptacle Outlets (JNEPRO)
- **Cannot** be used with Chicago electric products.

48" – 60"

Left & Right
with Power & Data Cut-Outs

60" – 84"

Left & Center & Right
with Power & Data Cut-Outs

Standard Cut-Outs

planning pages

Used to outline the rules and restrictions that should be considered when planning with products.

ez fence structure

ez fence structure

EXPANSION CITYLINE EZ FENCE STRUCTURE OVERVIEW 36

EXPANSION CITYLINE EZ FENCE STRUCTURE 38

EXPANSION CITYLINE EZ FENCE STRUCTURE – HEIGHT-ADJUSTABLE PRODUCT COMPATIBILITIES. 39

EXPANSION CITYLINE EZ FENCE STRUCTURE – CREEP 40

UNDERSTANDING EZ FENCE BEAMS 42

EZ FENCE BEAM BASICS 47

PLANNING WITH EZ FENCE BEAMS 48

PLANNING WITH CHICAGO EZ FENCE BEAMS 49

PLANNING WITH EZ FENCE BEAM COVERS 50

EZ FENCE SUPPORTS OVERVIEW 52

UNDERSTANDING EZ FENCE LEGS 54

EZ FENCE LEG – LOW HEIGHT BASICS 56

EZ FENCE LEG BASICS 57

ez fence structure (continued)

PLANNING WITH EZ FENCE LEGS 58

PLANNING WITH TOP COVER & UPPER A-FRAME READY CONFIGURATIONS – EZ FENCE LEGS 60

UNDERSTANDING EZ FENCE POST FOR SCREEN CONNECTION . . . 61

EZ FENCE POST FOR CONNECTION BASICS 62

PLANNING WITH EZ FENCE POST FOR CONNECTION 63

UNDERSTANDING EZ STRUCTURAL LEGS 66

EZ STRUCTURAL LEG BASICS 69

PLANNING WITH EZ STRUCTURAL LEGS 70

PLANNING WITH TOP COVER & UPPER A-FRAME READY CONFIGURATIONS – EZ STRUCTURAL LEGS 76

UNDERSTANDING EZ UPPER A-FRAMES 77

EZ UPPER A-FRAME FOR LIFT & DROP TILE AND ACCESSORY BASICS 80

EZ UPPER RAIL FOR LIFT & DROP TILE BASICS 81

EZ UPPER A-FRAME FOR LAMINATE SHELVES BASICS 82

ez fence structure (continued)

PLANNING WITH EZ UPPER A-FRAMES 83

UNDERSTANDING RUN-OFF FOR EZ FENCE. 86

RUN-OFF FOR EZ FENCE BASICS 88

PLANNING WITH RUN-OFF FOR EZ FENCE 89

PLANNING WITH GROMMETS & CUT-OUTS FOR EZ FENCE RUN-OFF 93

GRAIN/PATTERN DIRECTION & EDGE TRIM STYLES – EZ FENCE RUN-OFF 95

EZ FENCE LEG COVER – TOP BASICS 96

expansion cityline ez fence structure overview

Expansion Cityline EZ Fence Structure provides a simple and cost effective solution to route power and data through workstations or collaborative spaces. The structure can be configured in single ou double-sided configurations with optional upper structure for space division. The structure can also be used with no space division or configured for EZ beam-mounted screens.

components & features

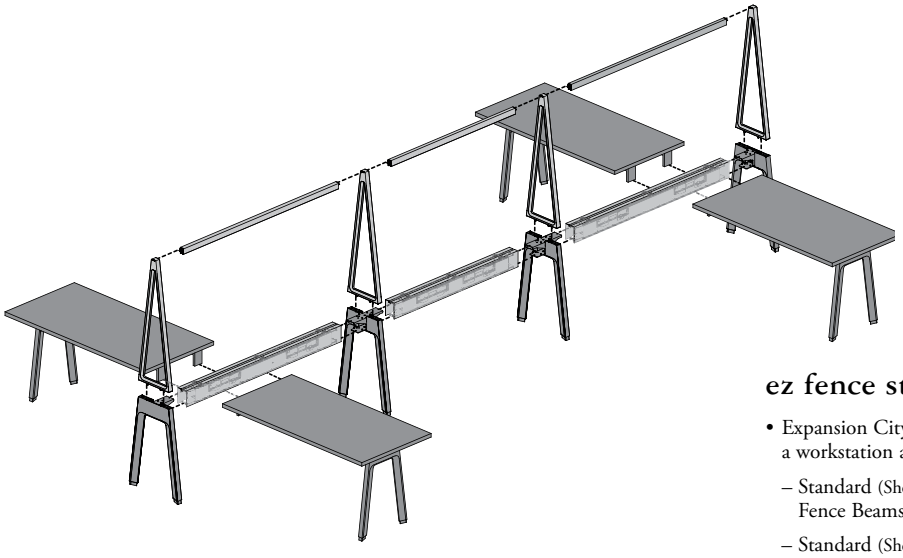

ez fence structure

- Expansion Cityline EZ Fence offers a variety of products to complete a workstation and can be specified separately, including:
  - Standard (Shown) or for Corridor EZ Fence Beams and Chicago EZ Fence Beams – Double-Sided
  - Standard (Shown) or Low Height EZ Fence Legs without or with EZ Fence Leg Covers – Top
  - Single- and Double-Sided EZ Structural Legs without or with EZ Fence Leg Covers – Top
  - Upper A Frame without (Shown) or with Shelves
  - Run-Off for EZ Fence (Shown)

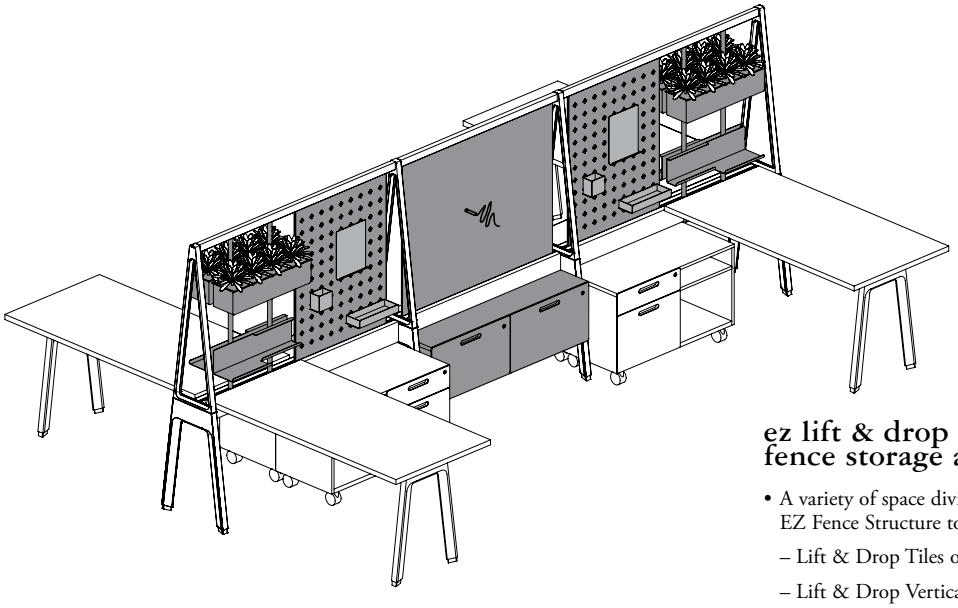

ez lift & drop tiles, ez fence screens, ez fence storage and ez accessories

- A variety of space division, storage and accessories can mounted on EZ Fence Structure to add functionalities
  - Lift & Drop Tiles offered in multiple materials
  - Lift & Drop Vertical Poles
  - Accessories – Lift & Drop Vertical Poles Mounted
  - EZ Beam-Mounted space division: Add-On, Elevated, Floor and Floor Screen with Metal Towers
  - Beam-Mounted Modesty
  - EZ Suspended Shelf or Credenzas Beam-Mounted

expansion cityline ez fence structure overview (continued)

- All structural products must be specified separately
- Available in two beam heights: low or standard height (Shown)

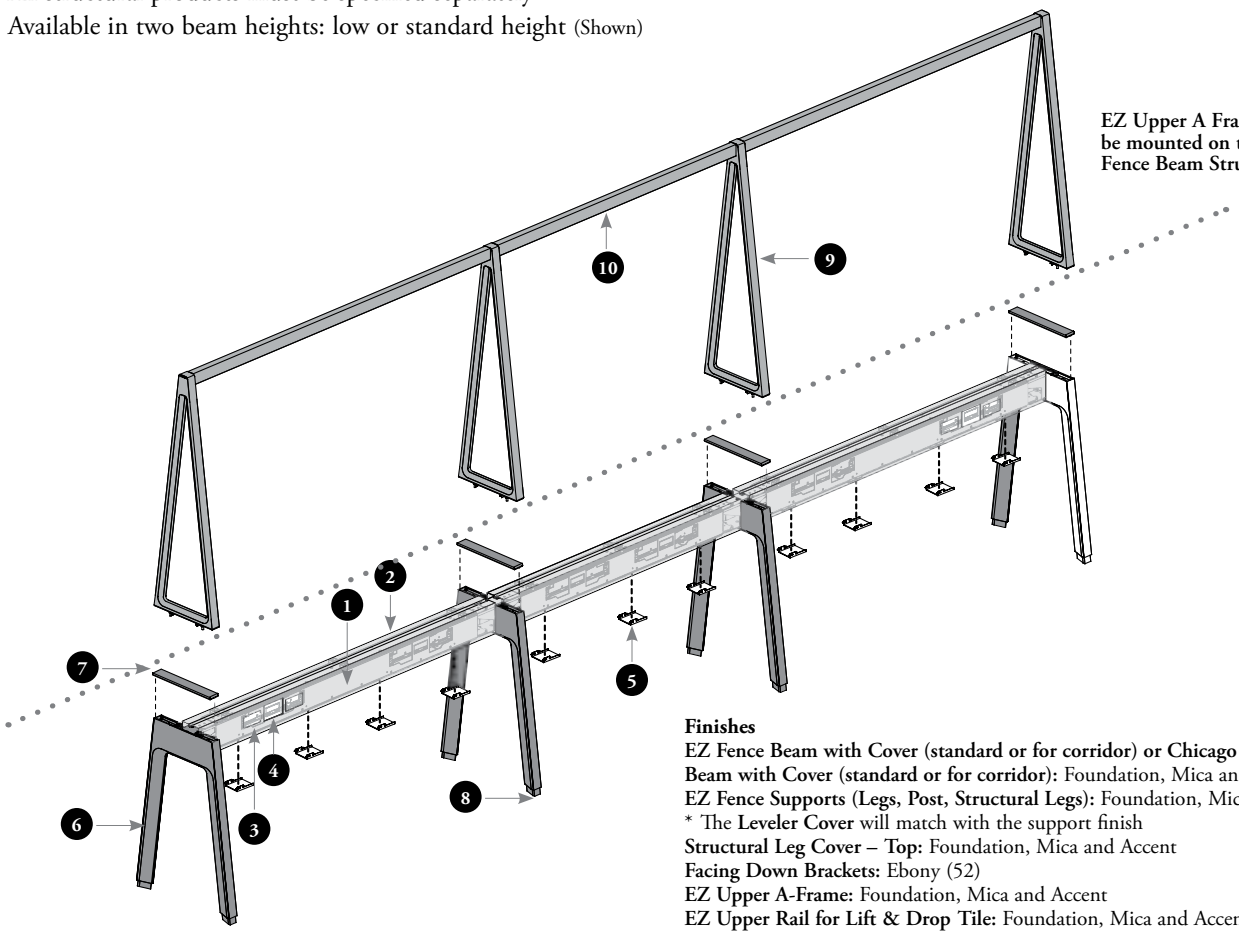

Finishes
EZ Fence Beam with Cover (standard or for corridor) or Chicago EZ Fence Beam with Cover (standard or for corridor): Foundation, Mica and Accent
EZ Fence Supports (Legs, Post, Structural Legs): Foundation, Mica and Accent
* The **Leveler Cover** will match with the support finish
Structural Leg Cover – Top: Foundation, Mica and Accent
Facing Down Brackets: Ebony (52)
EZ Upper A-Frame: Foundation, Mica and Accent
EZ Upper Rail for Lift & Drop Tile: Foundation, Mica and Accent

ez fence structure details

The EZ Fence Structure consists of the following base components:

1. EZ Fence Beams to allow mounting of Run-Off for EZ Fence, lift and drop tiles, screens, storage and accessories
2. Aesthetic Beam Cover
3. Outlet cut-outs to accept Receptacle Outlets
4. Data/Communication cut-out to accept Voice/Data Faceplates
5. Facing Down Structural Brackets to provide cable support and to help mounting various products to the beam

Included with EZ Fence Beams

6. EZ Fence Leg (Shown), Post or Structural Leg receiving beam ends and supporting EZ Upper A-Frame
7. EZ Fence Leg Cover – Top used to provide a aesthetic top finish, except when EZ Upper A-Frame is used

Included with EZ Fence Legs or ordered separately for re-configuration purposes

8. Levelers for a workstation leveling range of 3" (-3/16", +2 13/16")

The structure can be used without or with EZ Upper A-Frame and consists of the following base components:

9. Single-Sided or Shared (Shown) EZ Upper A-Frame for mounting of Upper Rail for Lift and Drop Tiles or for Laminate Shelves
10. Upper Rail for Lift and Drop Tiles allows mounting Vertical Poles with Left and Drop Tiles or Accessories

expansion cityline ez fence structure

It is available in 28" Standard Height EZ Fence Structure and in 18" Low Height EZ Fence Structure.

Single-Sided EZ Fence Structure is recommended against a wall. However, the double-sided structure can also be used for these applications under certain conditions. For more details, refer on page 59

single-sided

shared

fence applications

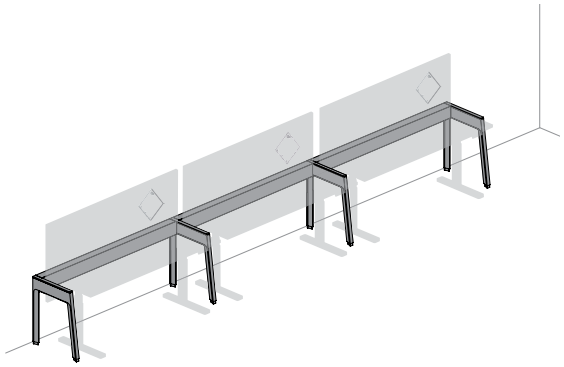

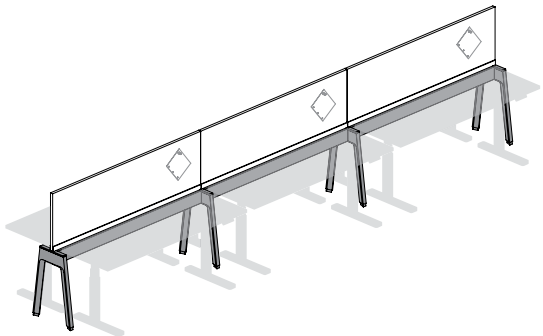

post applications (post leg & post-mounted screen)

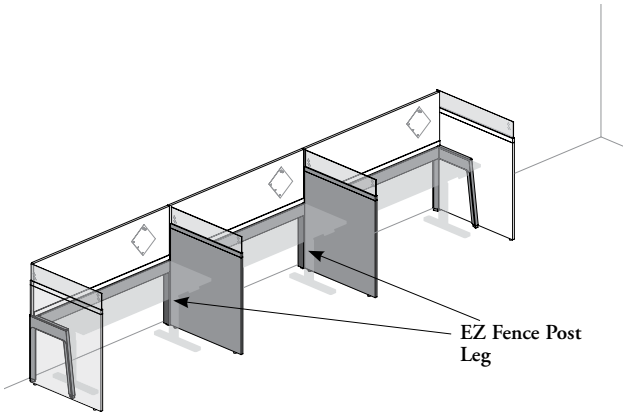

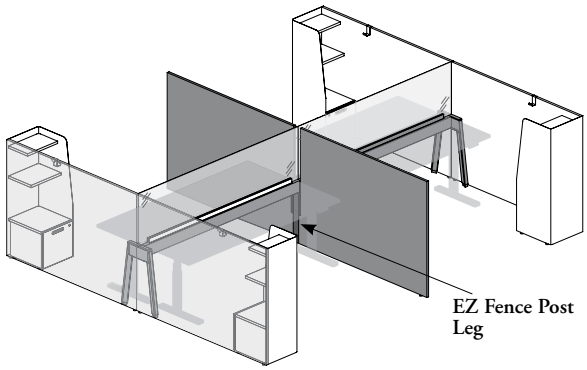

upper a-frame applications

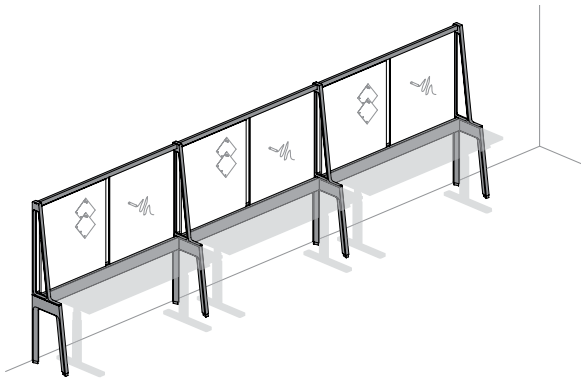

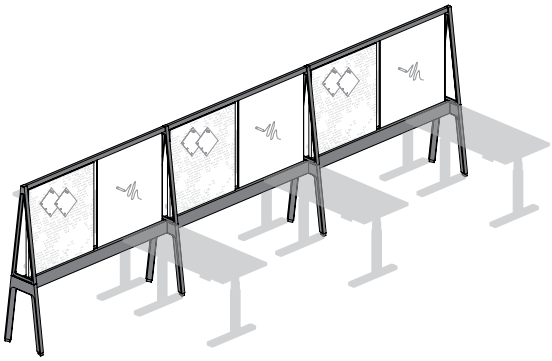

expansion cityline ez fence structure – height-adjustable product compatibilities

Height-Adjustable Run-Offs, hiSpace or Navigate Height-Adjustable Tables can be used to provide different height-adjustable solutions in Expansion Cityline EZ Fence Structure.

- All height-adjustable products must be specified separately
- Expansion Cityline offers three height-adjustable products collections that can be added to a EZ Fence Structure:
  – Run-Off
  – hiSpace
  – Navigate
- For more details and restrictions, refer to Height-Adjustability section

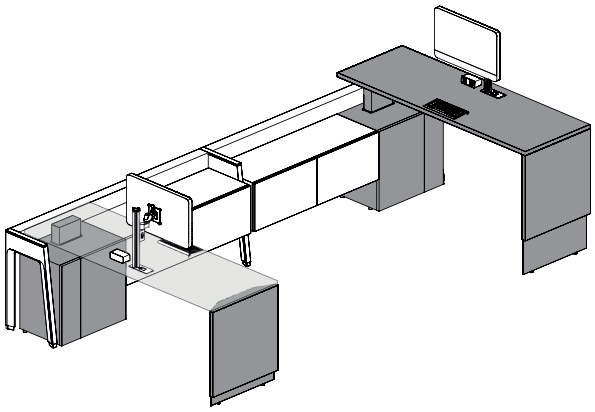

height-adjustable run-off

Height-Adjustable Run-Off (JNHB) combined with storage cabinet for Height-Adjustable Run-Off (JNHSC) create individual workstations with enhanced function and aesthetic with EZ Fence Structure.

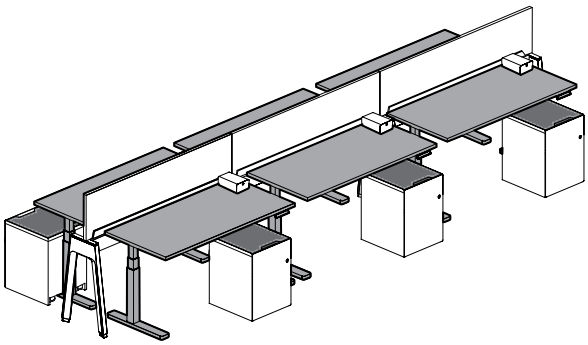

hispace

The height-adjustable mechanism offers a value proposition to create different workstation designs with EZ Fence Structure. Only hiSpace Rectangular Worksurface and Height-Adjustable Mechanism can be used with EZ Fence Structure.

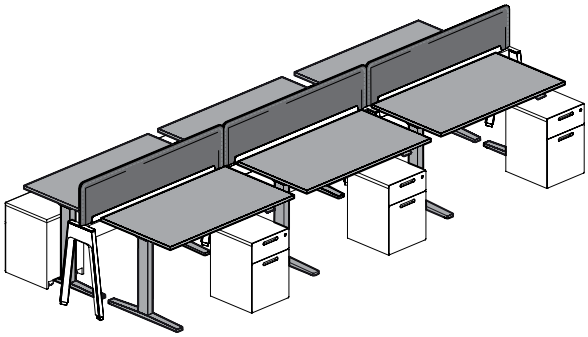

navigate

Navigate Height-Adjustable Tables provide a sturdy construction and a refined aesthetic with no visible fasteners in an EZ Fence Structure. Only Rectangular Tables can be used with EZ Fence Structure and are offered with multiple options of integrated power below the worksurface.

expansion cityline ez fence structure – creep

The Expansion Cityline EZ Fence Structure is composed of EZ Fence Beams, of EZ Fence supports and, when specified, of Upper A-Frame for more functionality.

When using the EZ Fence Structure, each support (EZ Fence Leg, EZ Fence Strcutural Leg, EZ Fence Post) will add 1 1/2" to the final foot print. Therefore, the Height-Adjustable Table width must be reduced by 2" from the nominal of the EZ Fence Beam width to allow proper clearance

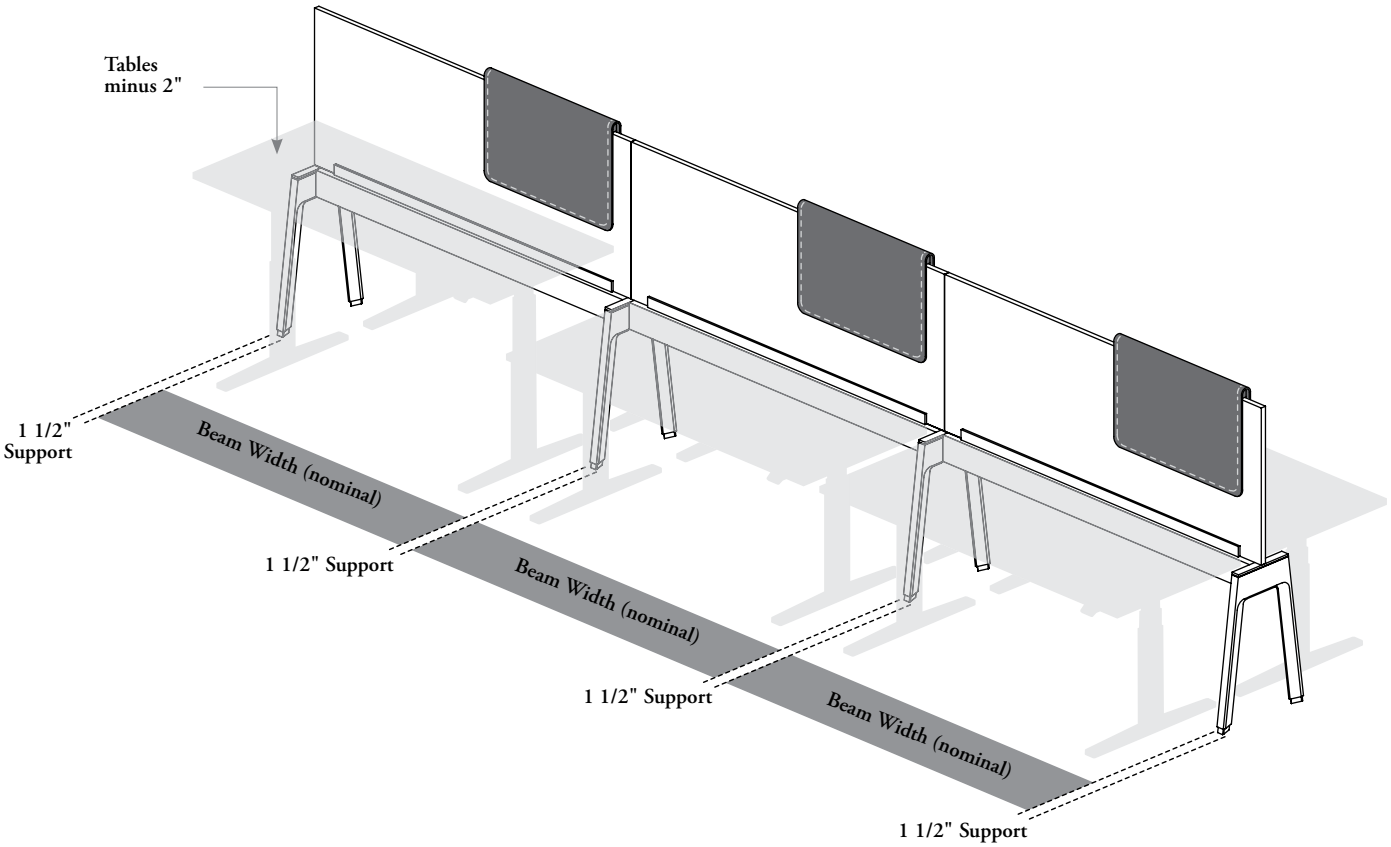

understanding ez fence beams

- Four styles are available: EZ Fence Beam (JZSBB), Chicago EZ Fence Beam (JZSCB), EZ Fence Beam for Corridor (JZSBS) or Chicago EZ Fence for Corridor (JZSCS)
- EZ Fence Beam can be used with EZ Fence supports

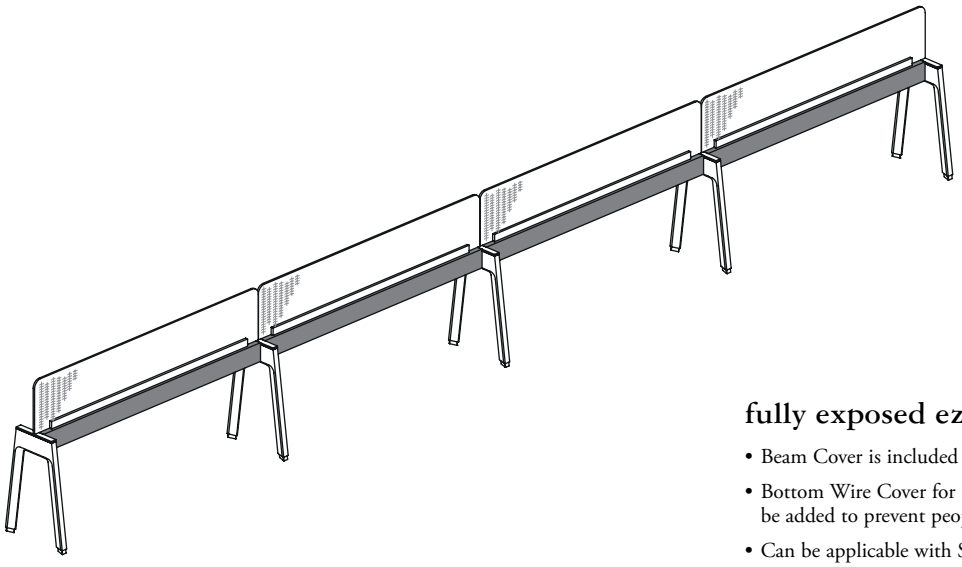

fully exposed ez fence beams

- Beam Cover is included and available in various configurations
- Bottom Wire Cover for Structural Beam – Standard (JNDBCB) can be added to prevent people from reaching wires inside the beam
- Can be applicable with Single- or Double-Sided configuration
- Wall Anchored Stabilizer for Structure (JNDSWB) can be required to stabilize a single-sided configuration against a wall
- Table Attached Stabilizer for Structure (JNDST) can be required to stabilize a single-sided configuration for a corridor application

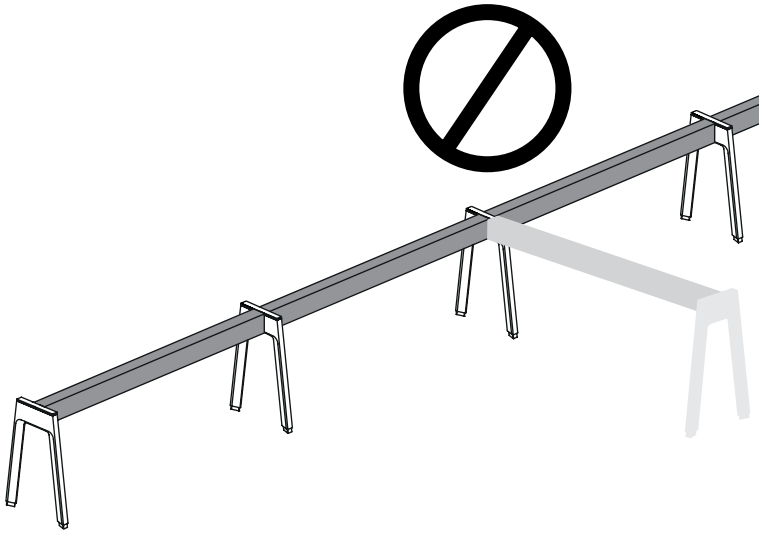

- Can be used in a linear configuration only. 90° or 120° configuration **cannot** be achieved

understanding ez fence beams (continued)

The Beam Cover is included to conceal the top and sides of a EZ Fence Beam.

ez fence beam (standard)

- The EZ Fence Beam (JZSBB) or Chicago EZ Fence Beam (JZSCB) always comes with a single-piece Beam Cover
- The Beam Cover to give the exposed beam an aesthetic look
- Can be specified to allow access to the power and data. Refer on pages 48 to 50, for more details
- Three cover configurations can be specified:

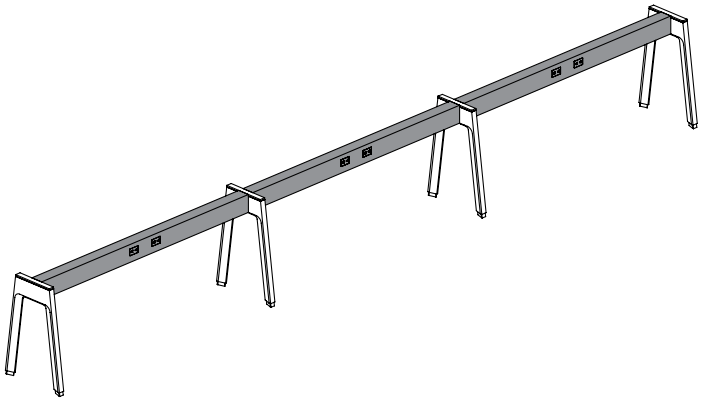

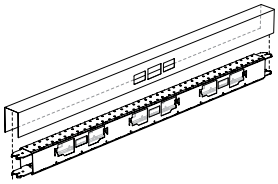

no screen configuration (N)

This Beam Cover **does not** have cut-outs for Add-On Screens – EZ Fence Beam-Mounted or groove for EZ Left and Drop Tiles. It must be specified when none of these solutions are needed

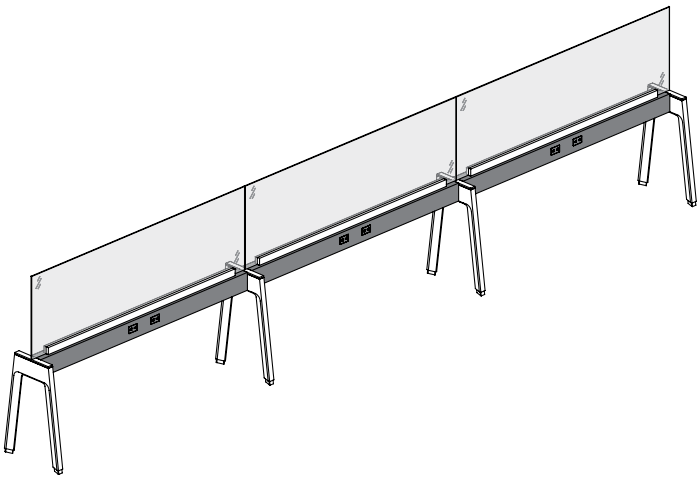

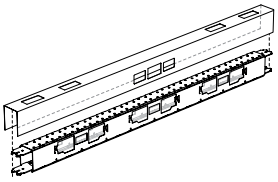

add-on screen configuration (S)

This Beam Cover comes with cut-outs to allow the installation of Add-On Screens – EZ Fence Beam-Mounted

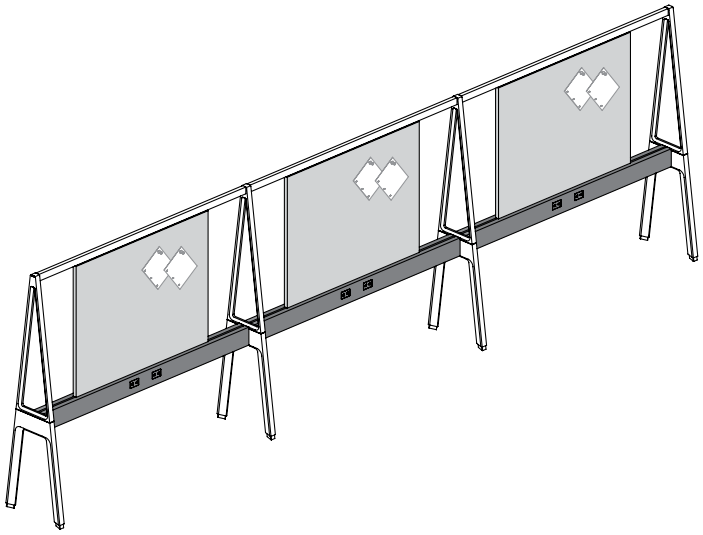

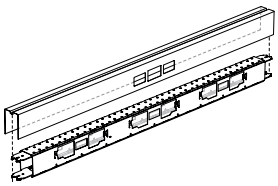

lift & drop tile configuration (T)

This Beam Cover comes with a groove to allow the installation of the EZ Lift and Drop Tiles or EZ Lift and Drop Vertical Poles

understanding ez fence beams (continued)

ez fence beam for corridor

- The EZ Fence Beam for Corridor (JZSBS) or Chicago EZ Fence for Corridor (JZSCS) always comes with a Beam Cover
- **NOTE:**
  – EZ Fence Beam for Corridor must be used with Single-Sided EZ Structural Legs when an EZ Floor Screen, EZ Elevated Screen or EZ Modesty Screen is needed
  – The back of this beam should never be exposed. An on-module EZ Floor Screen, EZ Elevated Screen or EZ Modesty Screen should always cover the back of the beam
- Each Beam Cover can be specified with or without Power and Data Cut-Outs. Refer on page 50, for more details
- Two Beam Cover configuration can be specified:

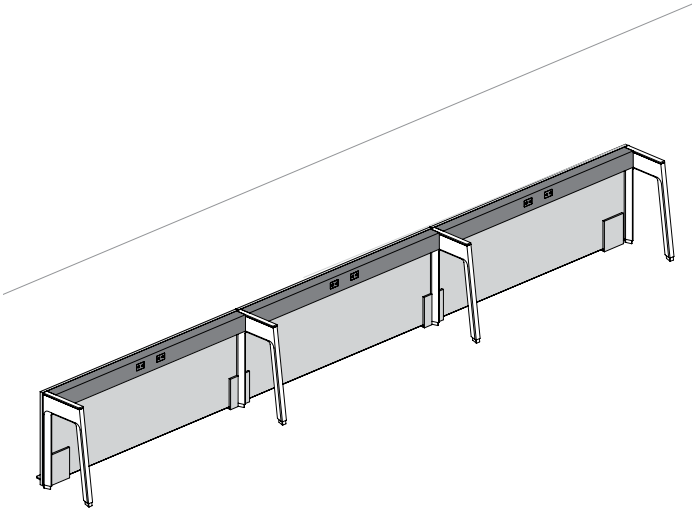

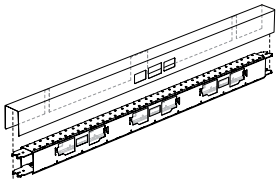

no screen configuration (N)

This Beam Cover should be specified to allow the installation of an EZ Floor Screen, EZ Elevated Screen or EZ Modesty Screen. It **does not** have groove for EZ Lift and Drop Tiles

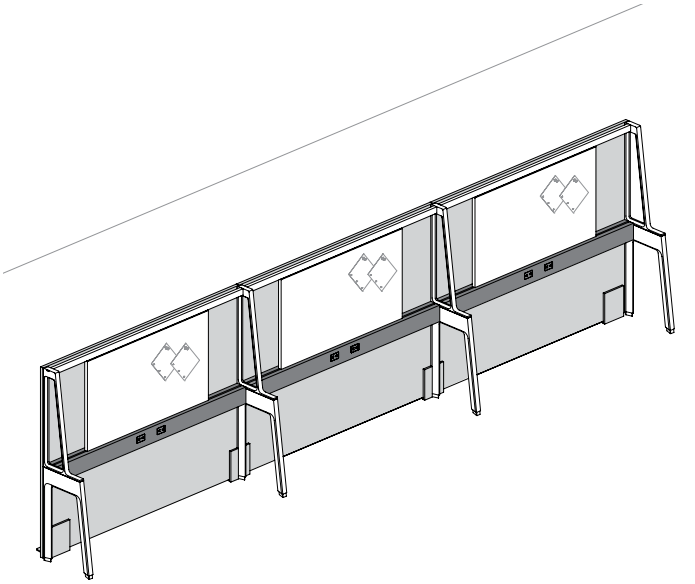

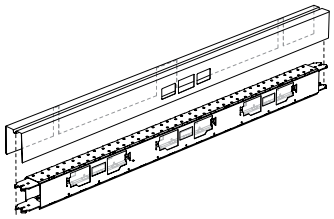

lift & drop tile configuration (T)

This Beam Cover provides a groove for EZ Lift and Drop Tiles or EZ Lift and Drop Vertical Poles, while allowing the installation of an EZ Floor Screen, EZ Elevated Screen or EZ Modesty Screen at the back

understanding ez fence beams (continued)

- EZ Fence Beams are universal, they can be used with single- or double-sided EZ supports
- Holds and distributes power and data
- Supports Run-Off for EZ Fence, screens, suspended storage and accessories

EZ fence beam connections

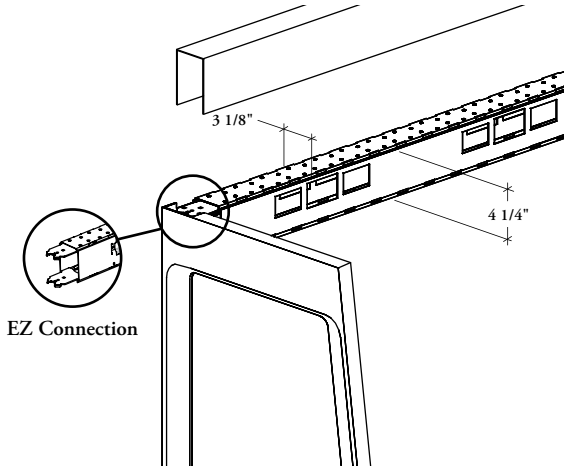

EZ Fence Beam runs along the back of Single-Sided Supports

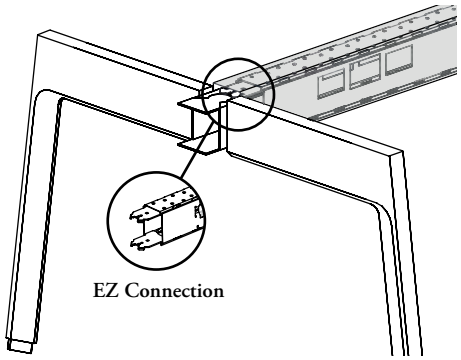

EZ Fence Beam runs centered between Double-Sided Supports

creep factor

Each EZ Fence Support (EZ Fence Leg, EZ Structural Leg and EZ Fence Post) will add a 1 /12" to the final footprint. Distance between two supports is actual nominal + 5/32". This additional gap is integrated to ease the installation of storage unit or furniture between two supports

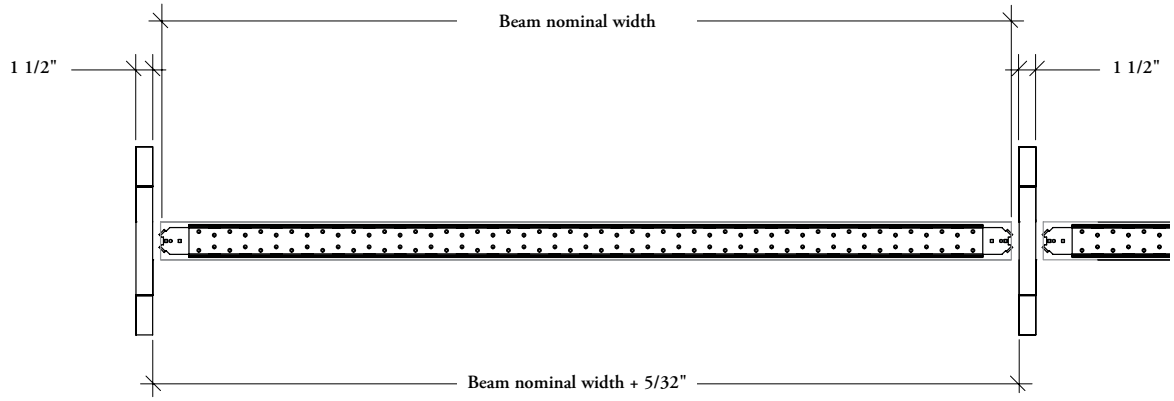

understanding ez fence beams (continued)

- The EZ Fence Legs, EZ Structural Legs or EZ Fence Post are required on both ends and between two EZ Fence Beams
- All EZ Fence Beam styles (JZSBB, JZSBS, JZSCB or JZSCS) come with an universal connector and are compatible with all support styles

ez fence legs compatible

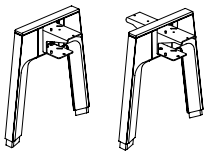

EZ Fence Leg – Low Height (JZSFL)

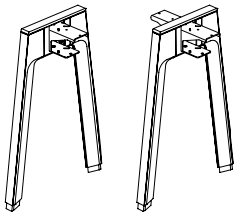

EZ Fence Legs (JZSFS)

ez structural legs compatible

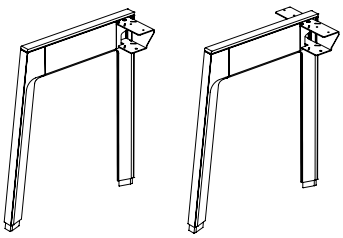

EZ Structural Legs – Single-Sided (JZSLS)

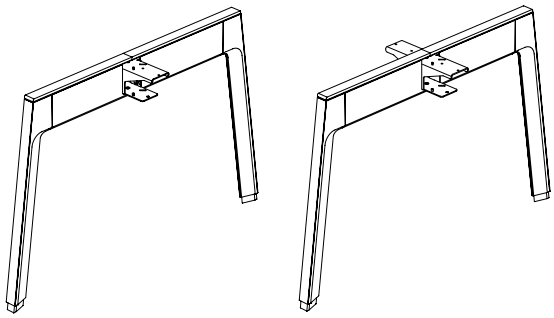

EZ Structural Legs – Double-Sided (JZSLD)

ez fence post compatible

EZ Fence Post with Screen Connection (JZSPS)

ez fence beam basics

The appropriate selection of EZ Fence Beams and EZ Fence supports allows to create a variety of linear power distribution with exposed beam configurations.

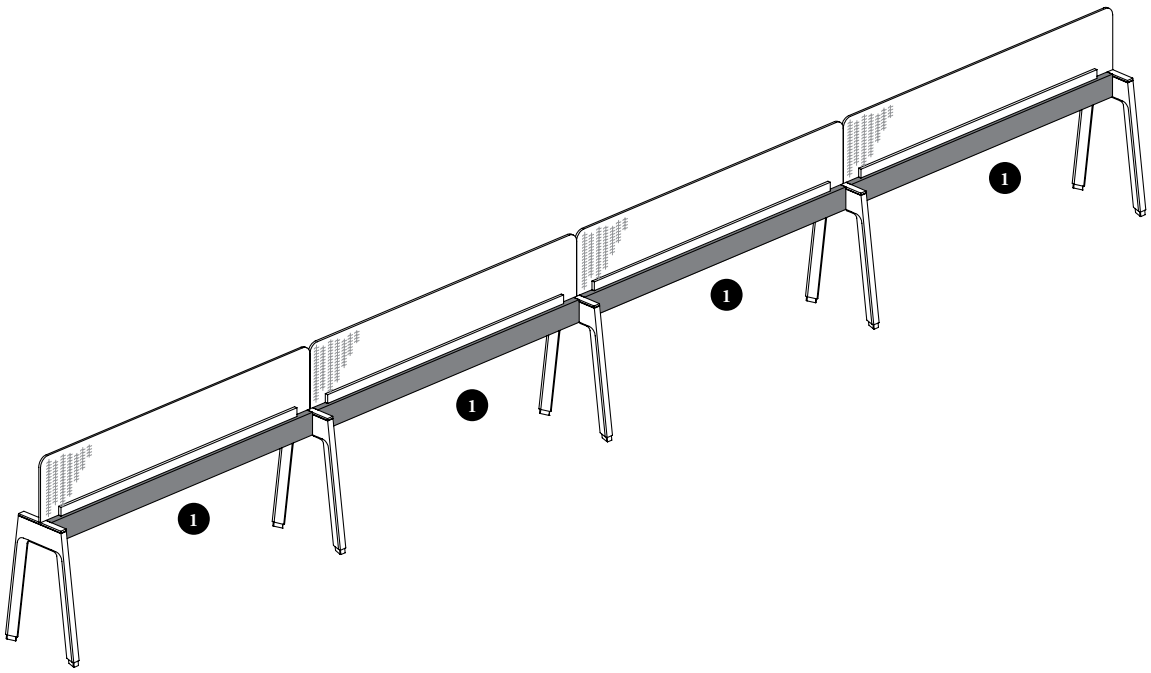

EZ Fence Beam (JZSBB), Chicago EZ Fence Beam (JZSCB),
EZ Fence Beam for Corridor (JZSBS) or Chicago EZ Fence Beam for Corridor (JZSCS)

- Available in widths 48" to 84" (6" increments)
- Standard height (28") or Low Height (18") application are available
- Facing Down Structural Brackets are included and installed under the beam to retain cables. The quantity required varies by size
- Optional cut-outs for the insertion of power and data module. It also allows wire management inside the beam to carry power and data
- Can support:
  - Run-Off for EZ Fence (JZWRF)
  - All Lift & Drop Tiles (JZT_) and Vertical Poles (JZTPS)
  - All Add-On Screens – EZ Fence Beam-Mounted (JZSA_B)
  - All Elevated Screens – EZ Fence Beam-Mounted (JZSE_B)
  - Modesty Screen – EZ Fence Beam-Mounted (JZMSB)
  - All Floor Screens – EZ Fence Beam-Mounted (JNSF_B)
  - All EZ Suspended Credenzas (JZB_)
  - Beam-Mounted Modesty Panel (JNABMS)
  - Beam-Mounted Supended Credenzas (JNBSF, JNBDF, JNBSO, JNBDO, JNBSOO, JNBDOO, JNBSC or JNBDC)

EZ Fence Beams (JZSBB or JZSBS)

- Compatible with standard electrical components only

Standard

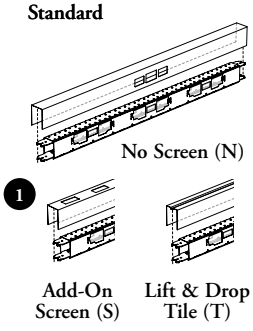

For Corridor

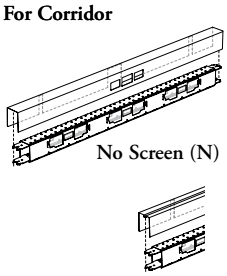

Chicago EZ Fence Beams (JZSCB or JZSCS)

- Compatible with Chicago electrical components only

Standard

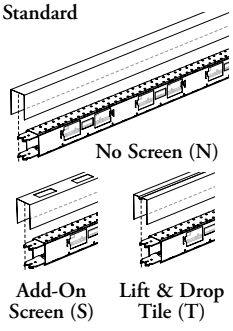

For Corridor

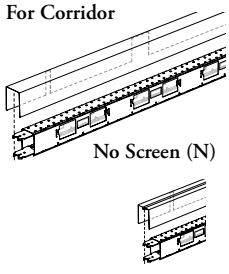

planning with ez fence beams

The following should be considered when planning with Expansion Cityline EZ Fence Beams.

ez fence beam – electrical/communication outlet locations

- The EZ Fence Beam (JZSBB) and EZ Fence Beam for Corridor (JZSBS) is designed to receive Power Box (JNEPB), Communication Extender Plate (JNEDE) and data faceplates only
- For each power box location, openings are done to allow the mounting Receptacle Outlets (JNEPRO)
- **Cannot** be used with Chicago electric products.

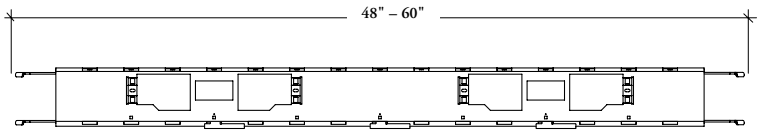

Left & Right
with Power & Data Cut-Outs

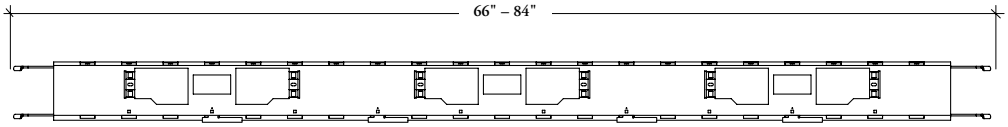

Left & Center & Right
with Power & Data Cut-Outs

Sandard Cut-Outs

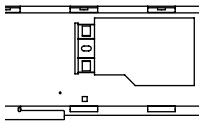

VS

Chicago Cut-Outs

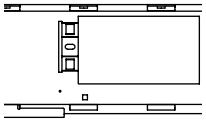

Cut-Out for Data

- A communication opening of 2.71" x 1.28" (69 mm x 35 mm) is provided on each side of the beam
- This cut-out is used with Communication Extender Plate (JNEDE) and data faceplate

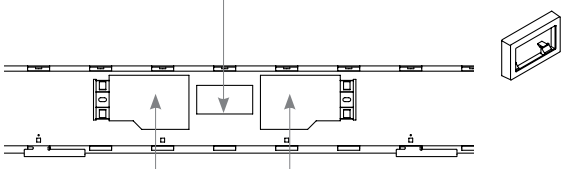

Cut-Outs for Power

These cut-outs provide access to mount Receptacle Outlets (JNEPRO) on a Power Box (JNEPB)

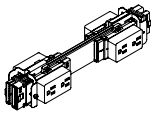

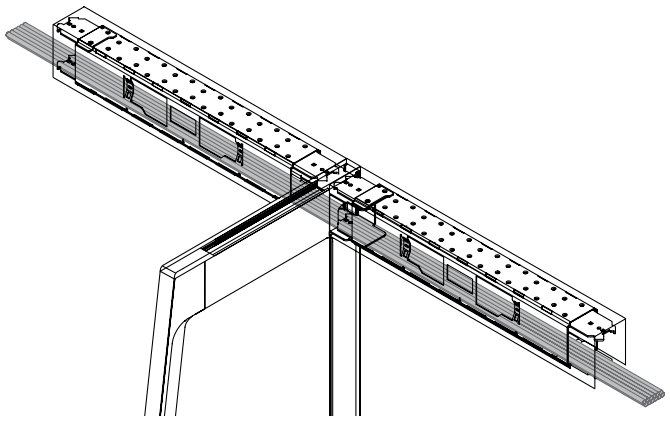

- The EZ Fence Beam (JZSBB or JZSBS) and EZ Structural Leg or EZ Fence Post allow cable routing along the EZ Fence Beam
- The beam data capacity varies dependently of the wire category specified. Refer to Understanding Data/Communication cables capacity on page 763
- The electric products are **not** included with beams. They must be specified separately
- For more details on Receptacle Outlets, Power Box and Communication Extender Plates, refer to the Lighting, Electrics & Communications section

planning with chicago ez fence beams

The following should be considered when planning with Expansion Cityline Chicago EZ Fence Beams.

chicago ez fence beam – electrical/communication outlet locations

- The Chicago EZ Fence Beam (JZSCB) or Chicago EZ Fence Beam for Corridor (JZSCS) is designed to receive Chicago Power Box (JNECPB), Communication Extender Plate (JNEDE) and data faceplates only
- For each power box location, two large openings on each side of the Chicago beam allow access to the receptacles of Chicago Power Box
- **Cannot** be used with standard electric products.

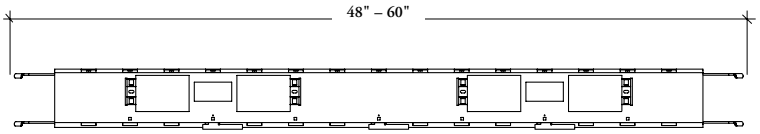

Left & Right
with Power & Data Cut-Outs

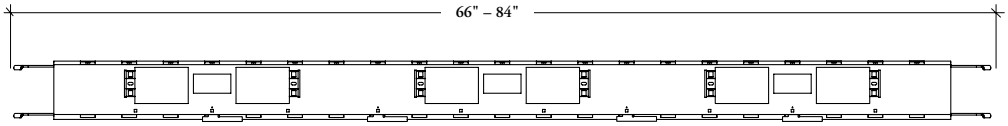

Left & Center & Right
with Power & Data Cut-Outs

Sandard Cut-Outs

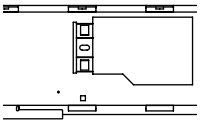

VS

Chicago Cut-Outs

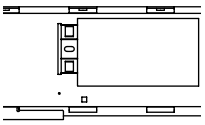

Cut-Out for Data

- A communication opening of 2.71" x 1.28" (69 mm x 35 mm) is provided on each side of the beam
- This cut-out is used with Communication Extender Plate (JNEDE) and data faceplate

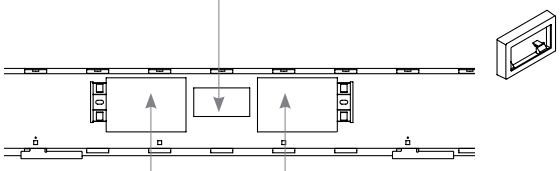

Cut-Outs for Power

These cut-outs provide access to mount receptacle outlets included on a Chicago Power Box (JNECPB)

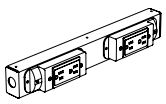

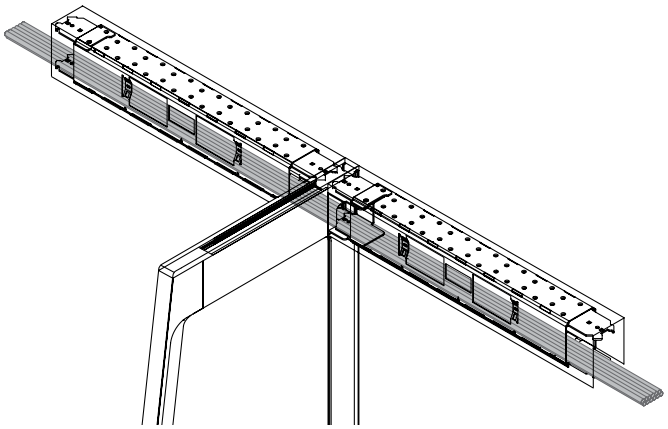

- The Chicago EZ Fence Beam (JZSCB or JZSCS) and EZ Structural Leg or EZ Fence Post allow cable routing along the Chicago EZ Fence Beam
- The beam data capacity varies dependently of the wire category specified. Refer to Understanding Chicago Data/Communication cables capacity on page 766
- The Chicago electric products are **not** included with beams. They must be specified separately
- For more details on Chicago Power Box, Communication Extender Plates and Chicago electric products, refer to the Lighting, Electrics & Communications section

planning with ez fence beam covers

The following should be considered when planning with Expansion Cityline EZ Fence Beam Cover.

power & data openings for standard or chicago ez fence beams

- EZ Fence Beam Covers are available with Power and Data Openings. Each power cut-out comes with two openings for two duplex. Each data cut-out comes with one opening for one Data Extender Plate
- The opening position offering varies dependently with cover width. The chart below outlines the possible locations
- Cut-outs are available centered, left, right of the beam cover in order to align with mounting positions of power and data on beams

no opening (NN)

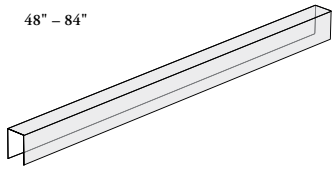

No Opening Position (N)

power only (PO) or power & data (DO) – one side

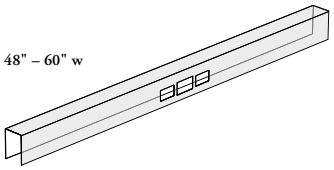

Center Opening Position (C)

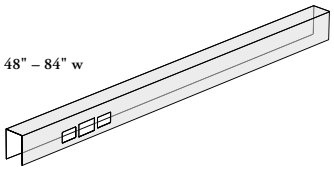

Left Opening Position (L)

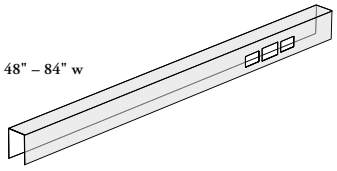

Right Opening Position (R)

power only (PT) or power & data (DT) – two sides

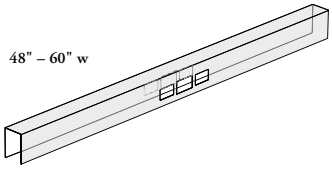

Center Opening Position (C)

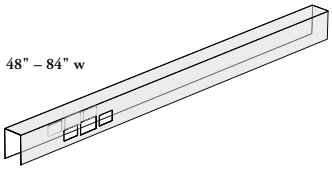

Left Opening Position (L)

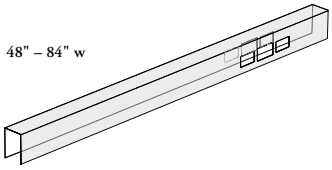

Right Opening Position (R)

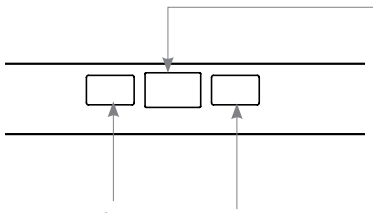

Cut-Out for Data

- The Communication Extender Plate (JNEDE) are mandatory and must be specified separately
- The data faceplates will must be mounted onto the Communication Extender Plate
- Communication openings on cover are designed to fit with the Communication Extender Plate only

Cut-Outs for Power

- These cut-outs provide access to the Receptacle Outlets (JNEPRO)
- Also used with receptacle outlets included with Chicago Power Box (JNECPB)

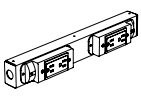

ez fence supports overview

compatibility chart for supports

- The EZ Fence Legs, EZ Structural Legs or EZ Fence Post are required on both ends and between two EZ Fence Beams.
- Here is a quick overview chart to understand, for each EZ support, which of the main storage solution or screen solution are compatible

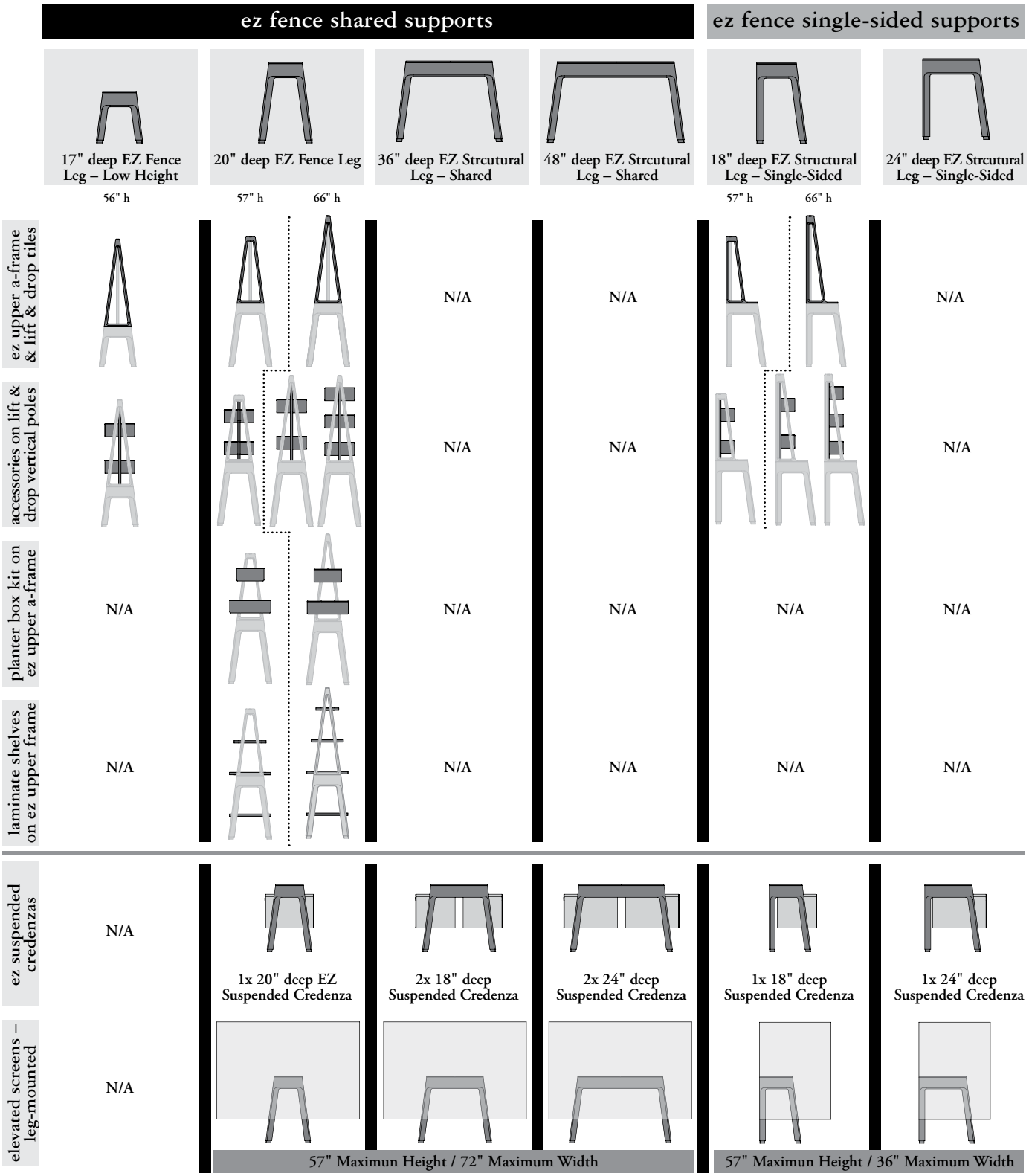

ez fence supports overview (continued)

compatibility chart for supports (continued)

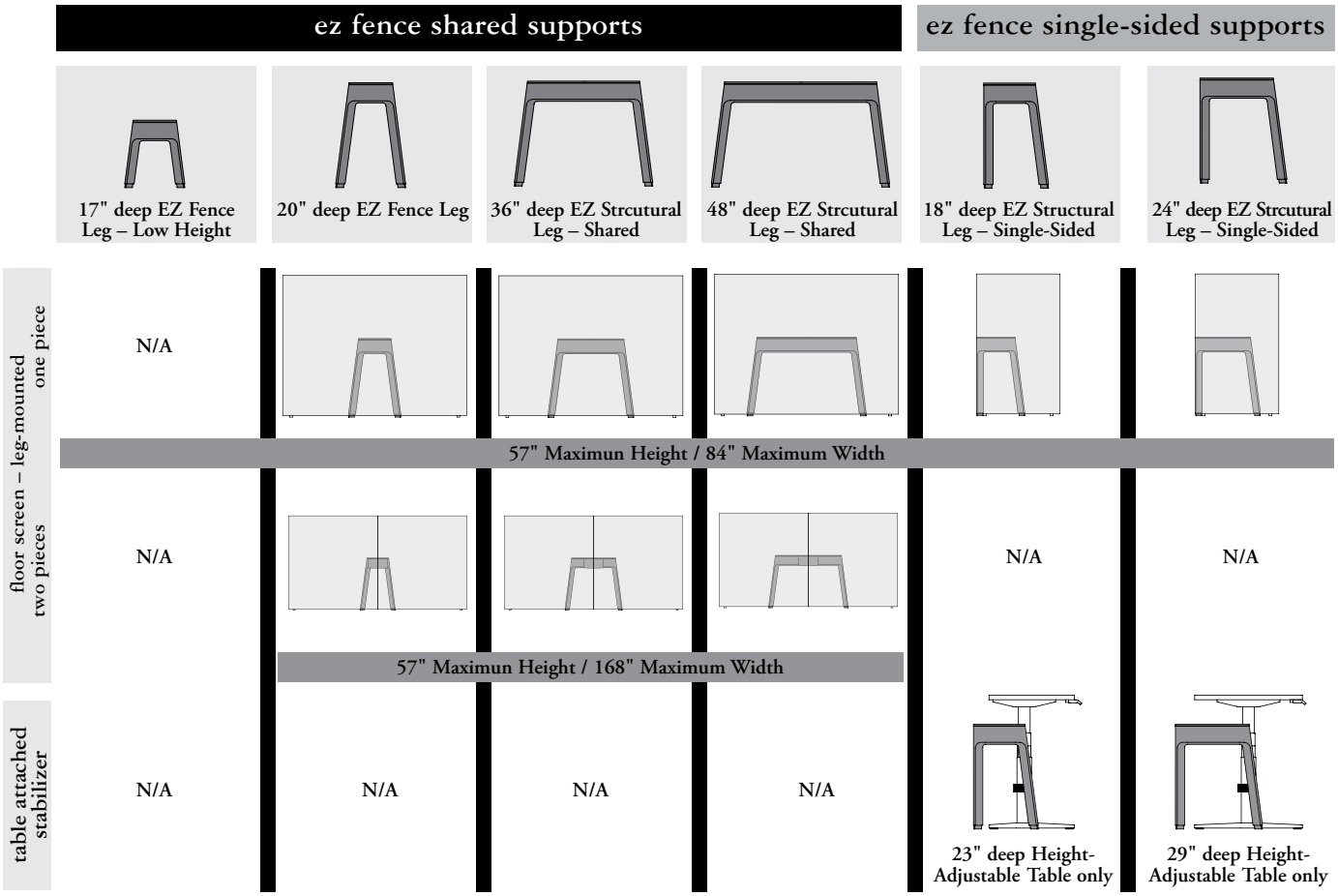

understanding ez fence legs

EZ Fence Legs and EZ Fence Legs – Low Height support and connect EZ Fence Beams in linear planning providing a variety of functionality for social spaces and height-adjustable table environment.

The use of EZ Fence Leg – Low Height represents a tripping over risk due to the low height of the structure. The furnishing shall only be used in a manner or in a location where someone tripping over is unlikely

Are installed at the end of one beam or between two contiguous beams (JZDBB, JZSBS, JZSCB or JZSCS)

1. Screws and nuts are also included to secure the beam connection to the EZ Fence Legs
2. When specified, EZ Fence Leg Cover – Top hides the top of the leg for an aesthetic look
3. The EZ Upper A-Frame Ready option can also be specified to allow the installation of a Shared EZ Upper A-Frame (JZSUD) on top of the leg
4. Comes with Leveler Covers hiding the black levelers for a more refined aesthetic

   Provides a leveling range of 3" (-3/16", +2 13/16")
5. Comes with two angled vertical leg profiles on both sides

   Two connections can be specified: End 6 or In-Line 7

low height

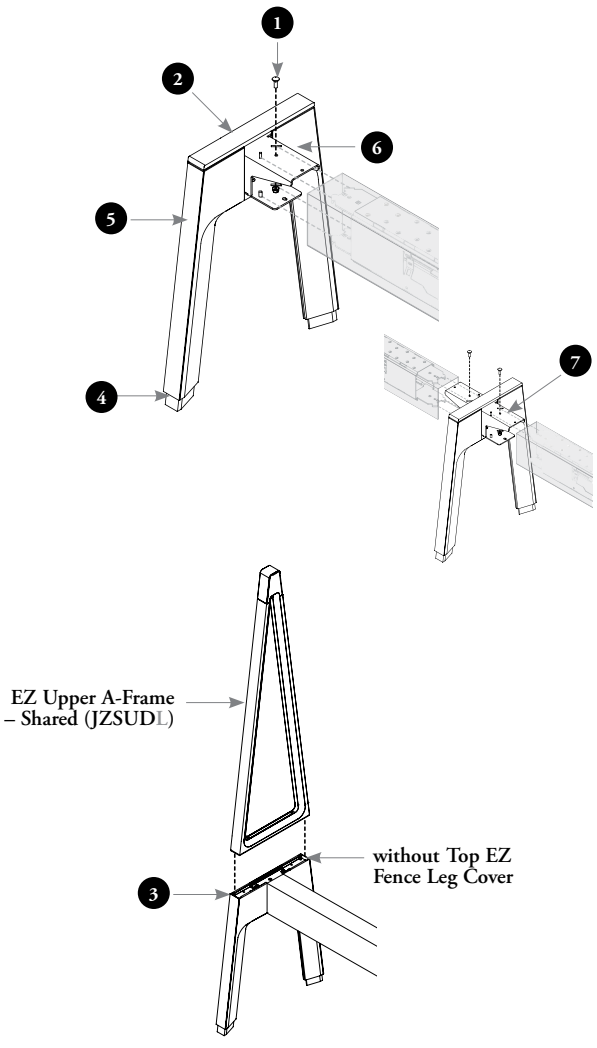

standard height

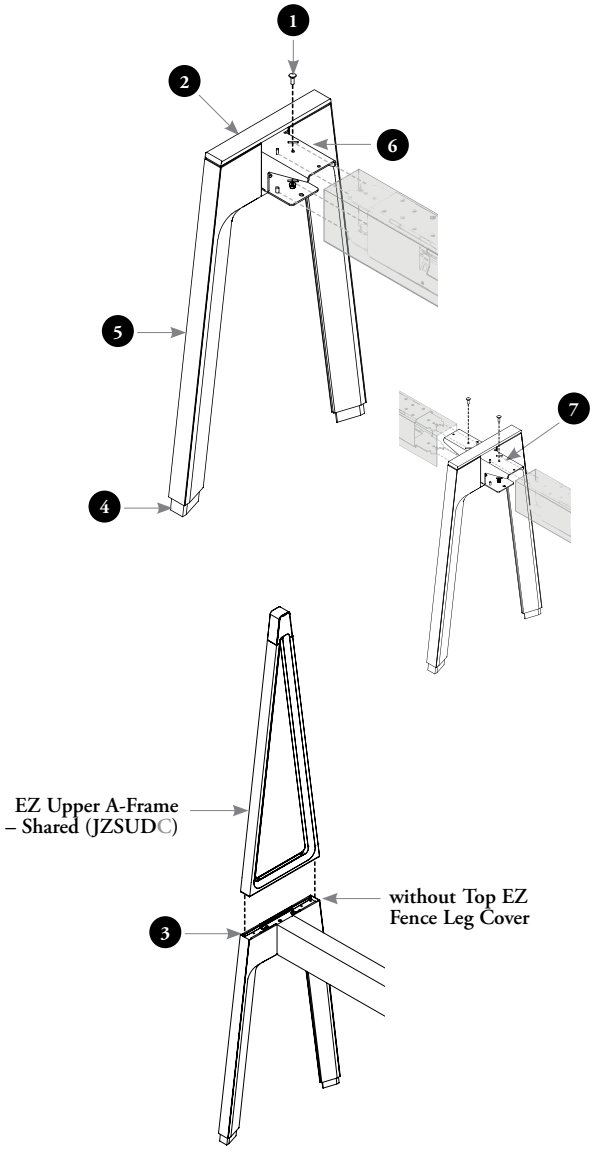

understanding ez fence legs (continued)

Two configurations are available:

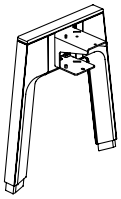

End (E)
EZ Fence Leg – Low Height

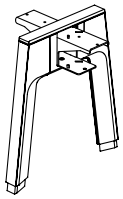

In-Line (I)

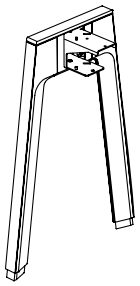

End (E)
EZ Fence Leg

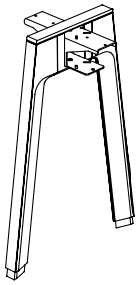

In-Line (I)

end position example

Used in end of run only

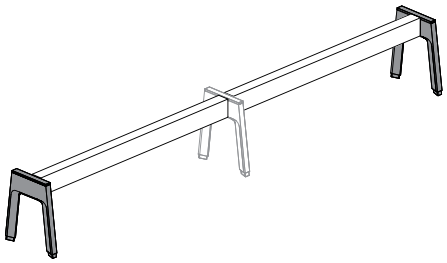

Top Cover Height

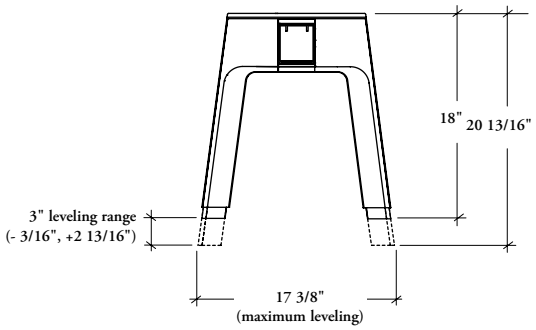

Top Cover Height

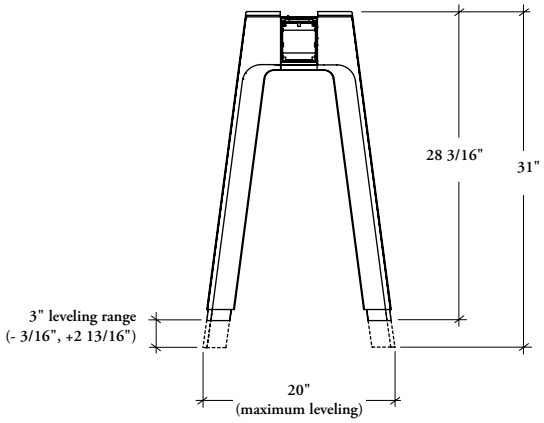

in-line position example

Used between two EZ Fence Beams

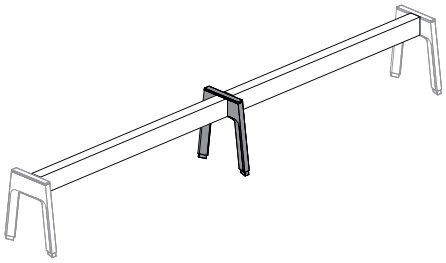

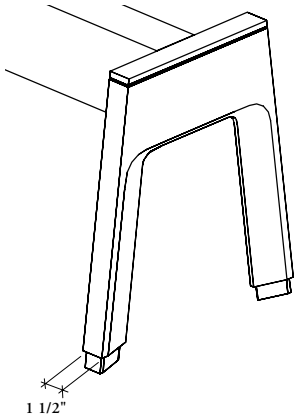

Slots on vertical parts

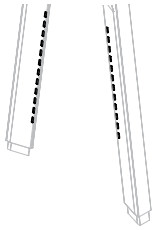

- The vertical parts come with integrated slots which contribute to support other products like EZ Suspended Credenzas, EZ Suspended Shelf and some Leg-Mounted Screens.
- Table Attached Stabilizers are **not** compatible with EZ Fence Legs

ez fence leg – low height basics

The following outlines the features of the EZ Fence Leg – Low Height.

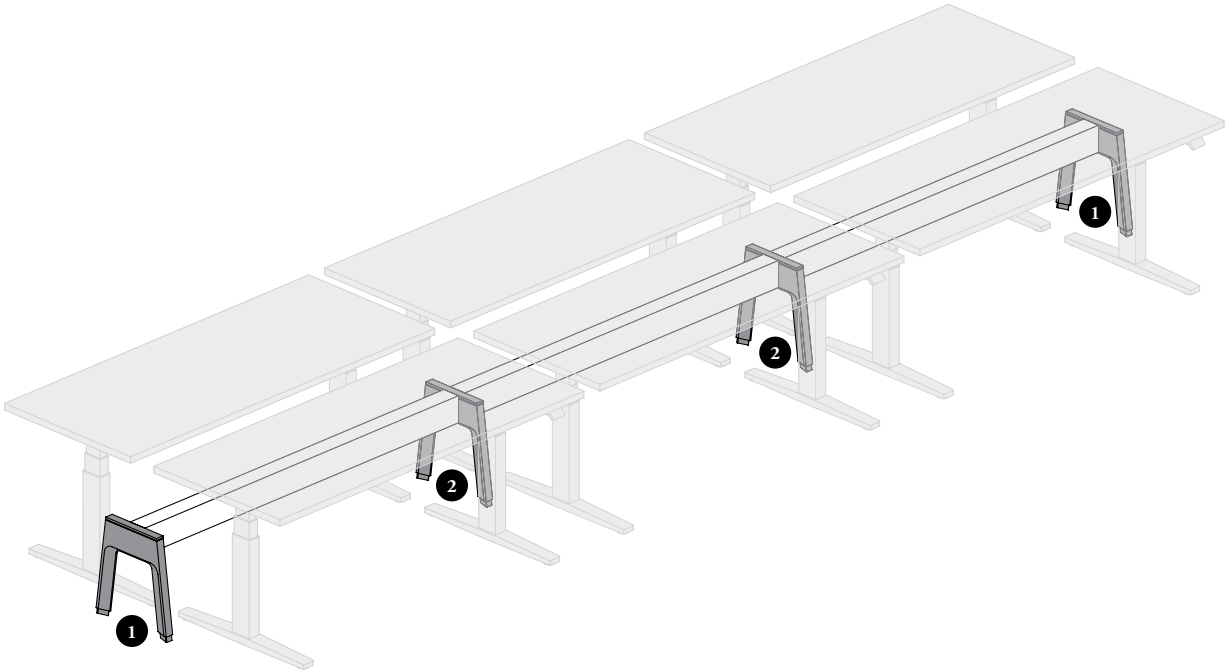

EZ Fence Leg – Low Height (JZSFL)

- Only available with Angled leg profiles
- Are available in end or in-line configurations
- Available in 17" depth
- Can be used with EZ Fence Beam (JZSBB) or Chicago EZ Fence Beam (JZSCB)
- Top Covers are included when specified
- Height is 18" from the finished floor to the top of the Top Cover with a leveling range of 3"
- Comes with a Leveler Cover to hide the black leveler for aesthetic look. The Leveler Cover will match with the leg finish

1

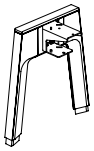

End (E)

2

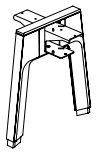

In-Line (I)

ez fence leg basics

The following outlines the features of the EZ Fence Leg.

20" deep EZ Suspended Credenza (JZBSO, JZBDO, JZBFF or JZBSM) and 18" EZ Suspended Shelf (JZBSH) can be installed between two EZ Fence Legs and a variety of Leg-Mounted Screens

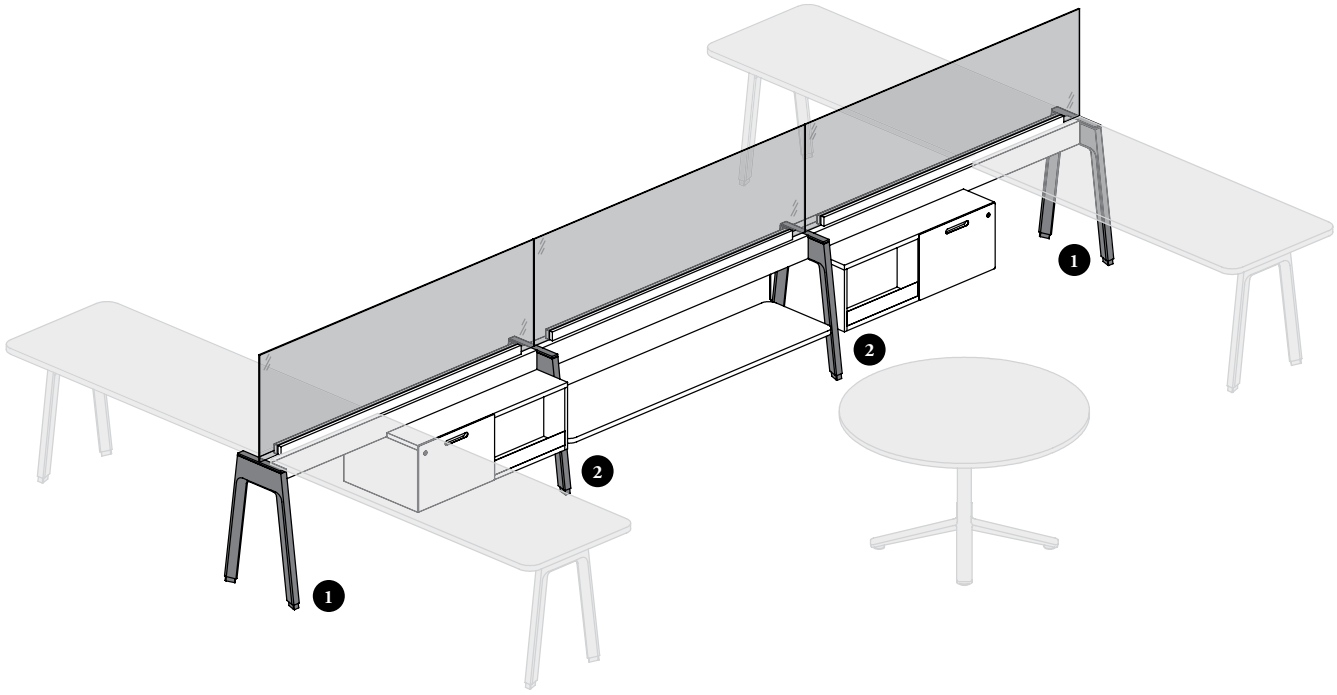

EZ Fence Leg (JZSFS)

- Only available with Angled leg profiles
- Are available in end or in-line configurations
- Available in 20" depth
- Can be used with EZ Fence Beam (JZSBB) or Chicago EZ Fence Beam (JZSCB)
- Top Covers are included when specified
- Height is 28 3/16" from the finished floor to the top of the Top Cover with a leveling range of 3"
- Comes with a Leveler Cover to hide the black leveler for aesthetic look. The Leveler Cover will match with the leg finish

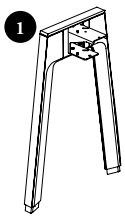

End (E)

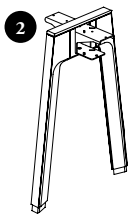

In-Line (I)

planning with ez fence legs

Can be used in linear only

ez fence leg station without screen – no restriction

This furnishing shall only be used in a manner or in a location where someone tripping over is unlikely

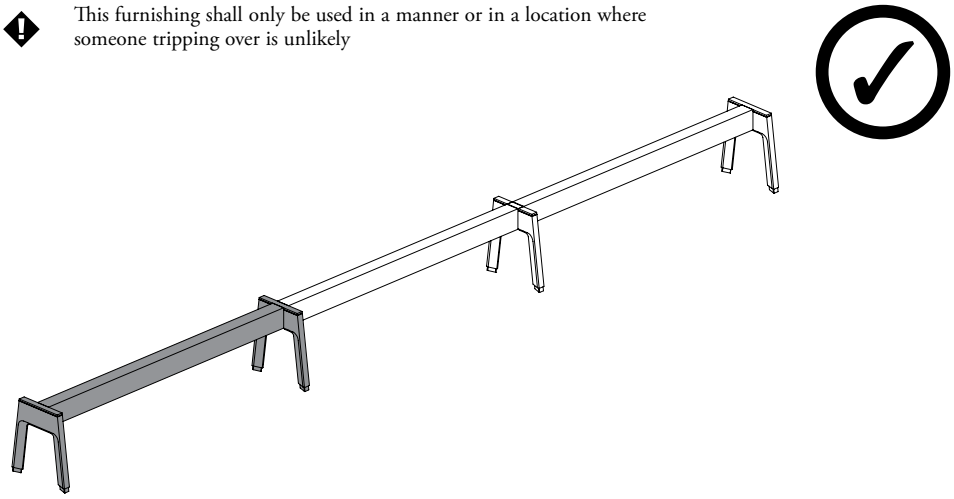

ez fence leg – low height supporting restrictions

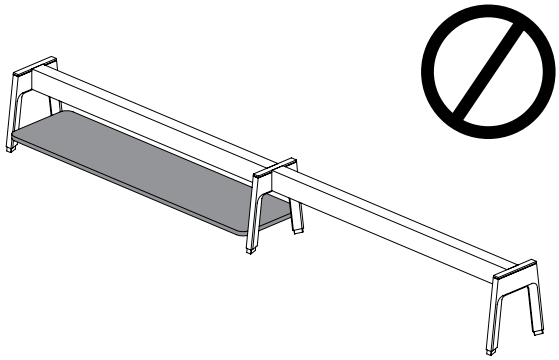

EZ Suspended Shelf (JZBSH) **cannot** be attached between two EZ Fence Legs – Low Height

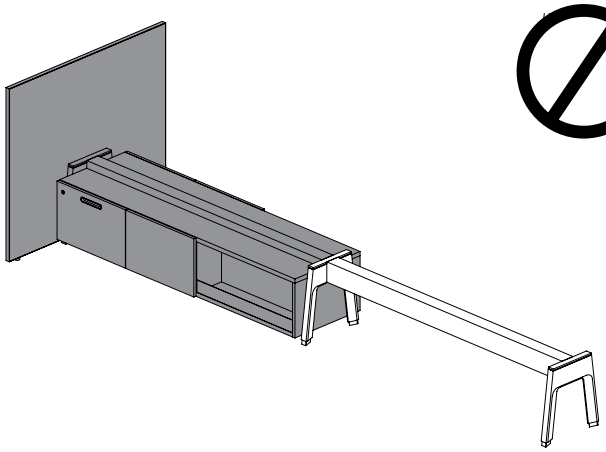

- No EZ Suspended Credenza (JZBSO, JZBDO, JZBDF or JZBSM) can be attached between two EZ Fence Legs – Low Height
- Leg Mounted Elevated Screen or Floor Screen or Floor Screen with Metal Tower **cannot** be mounted on the side of the leg and a Suspended or Semi-Suspended Credenza, or a Suspended Pedestal/Cubby, **cannot** be attached to EZ Fence Legs

planning with ez fence legs (continued)

ez fence leg (low or standard height) stability restrictions

When Add-On Screens or Upper A-Frames are specified on an EZ Fence application, these restrictions apply.

total of ez fence beams	without add-on screen or upper A-frame	with add-on screen – ez beam-mounted	with upper A-frame
Three Beams or + 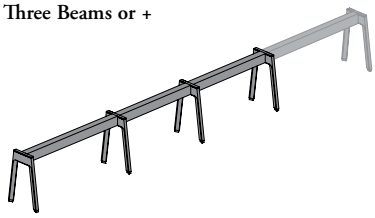	**No restriction**	**No restriction**	**No restriction**
Two Beams 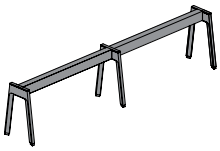	**No restriction**	Add-On Screens must be specified on both beams **OR** Must be combined with one of the product listed below	Upper A-Frames must be specified on both beams combined with a total of at least 44" wide tiles (other than Fabric) or Laminate Shelves or Accessories (Lift and Drop Vertical Poles Mounted) on each beam **OR** Must be combined with one of the product listed below
One Beam 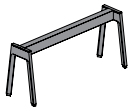	**No restriction**	Must be combined with one of the product listed below	Must be combined with one of the product listed below

Products from this list can add stability to the EZ Fence:

– Run-Off for EZ Fence (JZWRF)
– EZ Suspended Storage (JZBSO, JZBDO, JZBFF or JZBSM)
– Floor Screen – EZ Post-Mounted (JZSFSP or JZSFGP)
– Floor Screen with Metal Tower – EZ Post-Mounted (JZSFOP, JZSFDP or JZSFTP)
– Floor Screen – Leg-Mounted (JNSFST or JNSFGT)
– Floor Screen with Metal Tower – Leg-Mounted (JNSFOT, JNSFDT or JNSFTT)

planning with top cover & upper a-frame ready configurations – ez fence legs

- The EZ Fence Leg Cover – Top is offered as an option on all leg styles and are also offered separately for re-configuration purposes, refer to page 96 for more details
- Two mounting options are available dependently on leg style:

top cover (C)

- Finishes the top of legs when **no** Upper A-Frame is needed
- Comes in an one piece to cover entirely the upper part of the leg
- Available with EZ Fence Legs – Low (JZSFL) or Standard Height (JZSFS)
- Applicable with In-Line and End configurations
- When specified, the Top Cover is included with leg

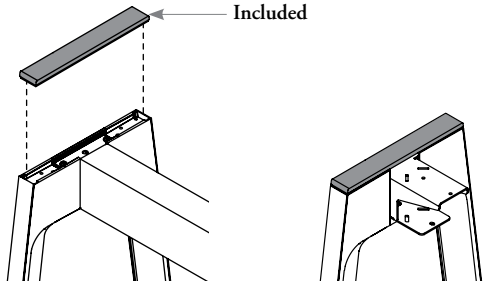

upper A-frame ready (U)

- Comes without Top Cover to allow the installation of an EZ Upper A-Frame on the leg
- Available with EZ Fence Legs – Low (JZSFL) or Standard Height (JZSFS)
- Applicable with In-Line or End configurations
- When specified, the Upper A-Frame is **not** included and can be specified separately. Refer on page 80 for more details.

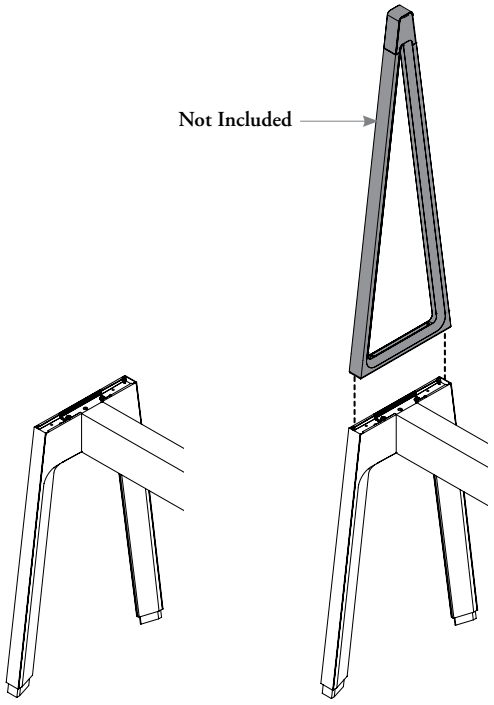

understanding ez fence post for screen connection

EZ Fence Post for Screen Connection support and connect EZ Fence Beams and Floor Screens. It allows lateral space division between users.

ez fence post for screen connection

Installed between two contiguous beams to provide frame support and can only be used with EZ Fence Beam (JZSBB), EZ Fence Beam for Corridor (JZSBS), Chicago EZ Fence Beam (JZSCB) or Chicago EZ Fence Beam for Corridor (JZSCS)

1. Screws and nuts are also included to secure the beam connection to the EZ Fence Post connector
2. Available for in-line connection only
3. Comes with a vertical rectangular post with adjustments
4. **Connection Brackets** are provided with Floor Screen – EZ Post-Mounted (JZSFSP, or JZSFGP) or with Floor Screen with Metal Tower – EZ Post-Mounted (JZSFOP, JZSFDP or JZSFTP). A floor screen is mandatory to ensure post stability
5. Comes with two side post covers to hide post adjustment and part of the Connection Brackets
6. Comes with an embeded leveling post section with an integrated glide for a more refined aesthetic

Provides a leveling range of 3" (-3/16", +2 13/16")

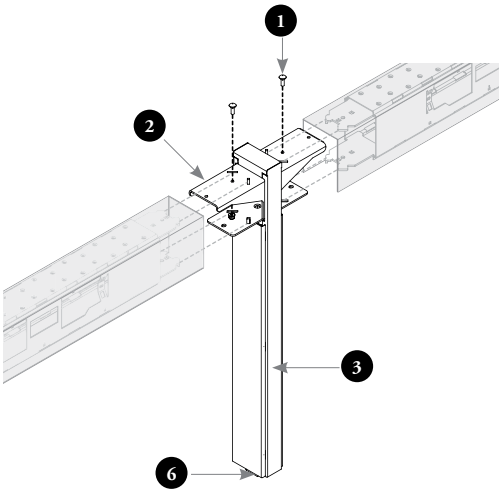

At beam height, the post is 1 1/2" wide. Under the beam, the covers exceed this dimension, for a total width of 2 1/4"

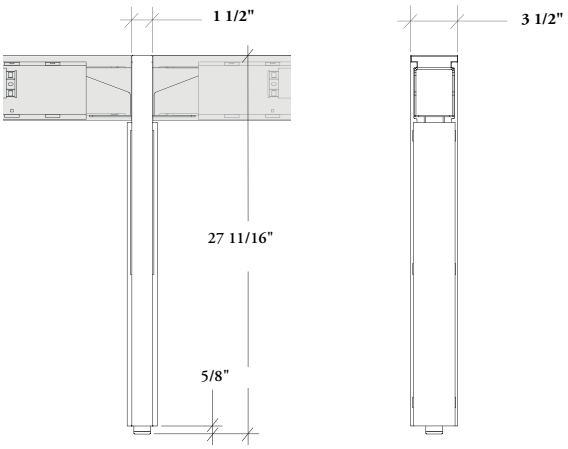

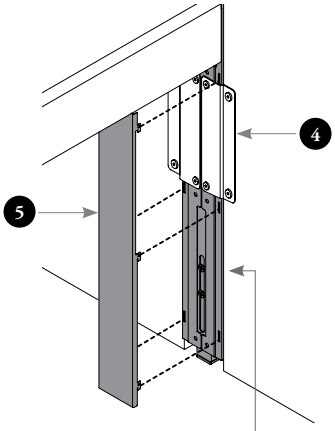

EZ Fence Post can be used in single-sided or shared EZ Fence layouts

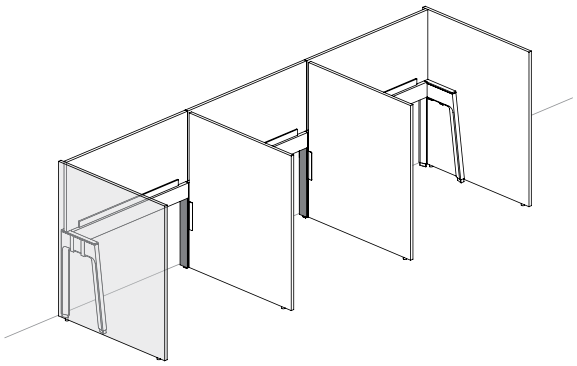

single-sided application

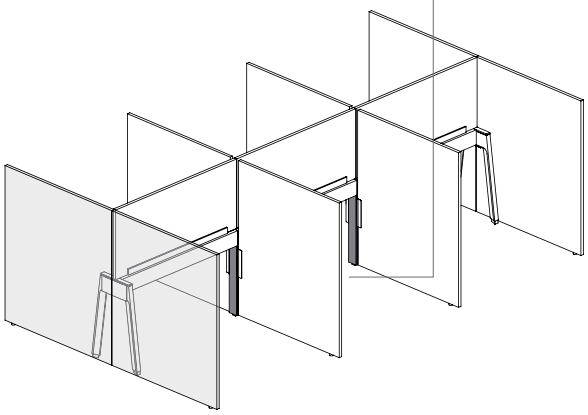

shared application

ez fence post for screen connection basics

The following outlines the most common positions for EZ Fence Posts in an Expansion Cityline workstation.

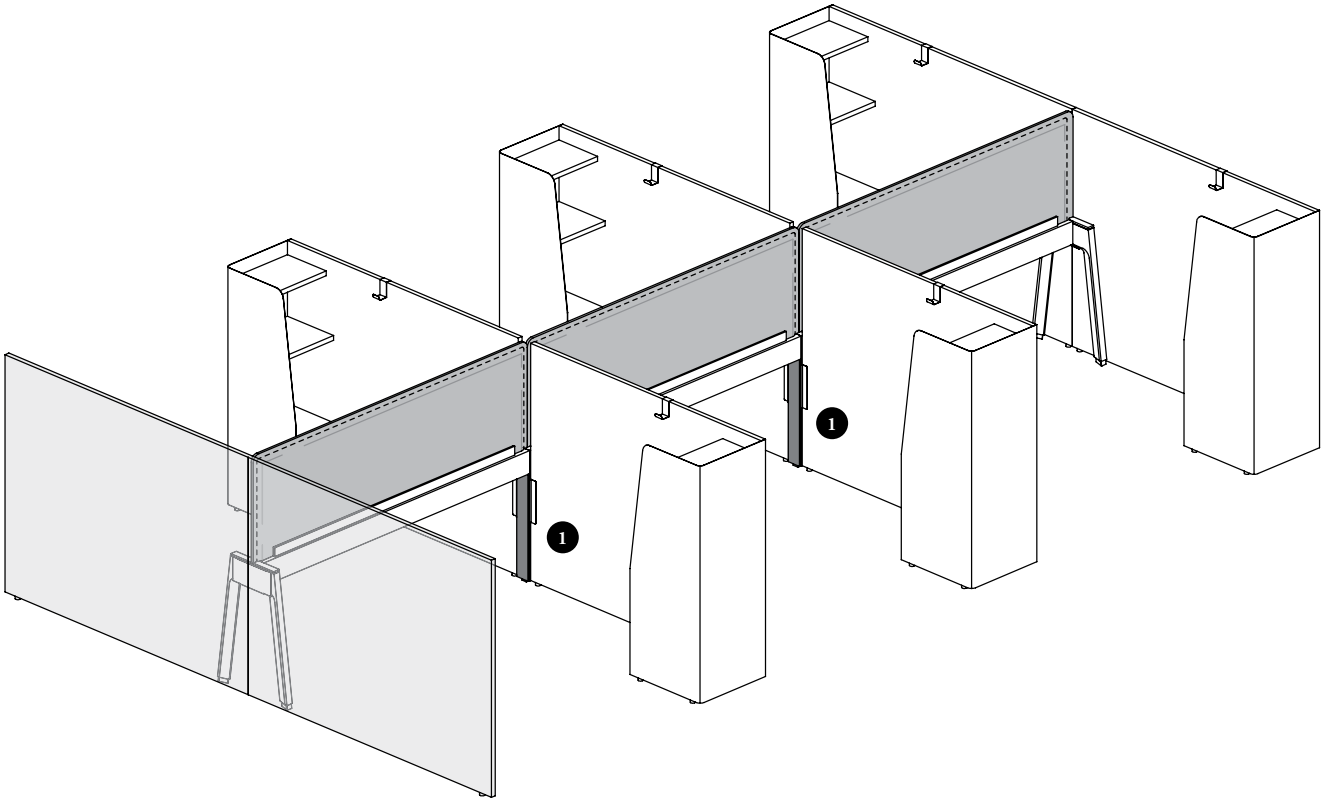

EZ Fence Post for Screen Connection (JZSPS)

- Can be used with Floor Screen – EZ Fence Post-Mounted (JZSFSP, or JZSFGP) or Floor Screen with Metal Tower – EZ Post-Mounted (JZSFOP, JZSFDP or JZSFTP)
- Avalaible in 3 1/2" depth
- Height is 28 3/16" from the finished floor to the top

planning with ez fence post for screen connection

The following should be considered when planning with EZ Fence Post for Screen Connection.

- Available in In-Line Configuration only
- Always installed between two contiguous beams, **cannot** be used at the end of an EZ Fence

restrictions

single-sided application

One EZ Post-Mounted floor screen can be installed on each post

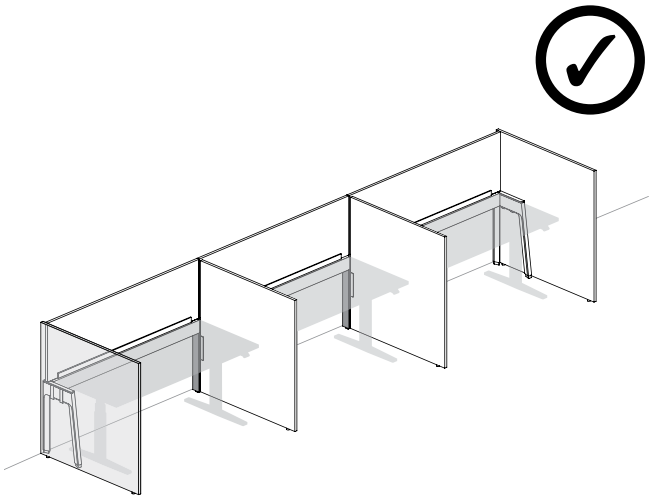

shared application

One or two EZ Post-Mounted floor screens can be installed on each post

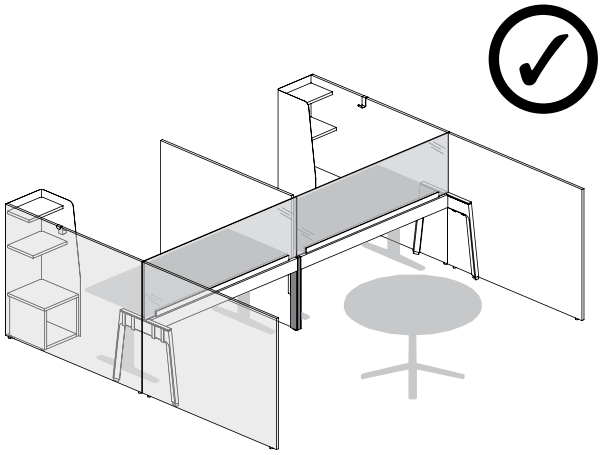

single-sided or shared application

The EZ Fence Post **cannot** be used alone in the Fence Structure, and it must always be combined with one or two EZ Post-Mounted Floor Screens (JZSFSP, or JZSFGP) or Floor Screens with Metal Tower (JZSFOP, JZSFDP or JZSFTP)

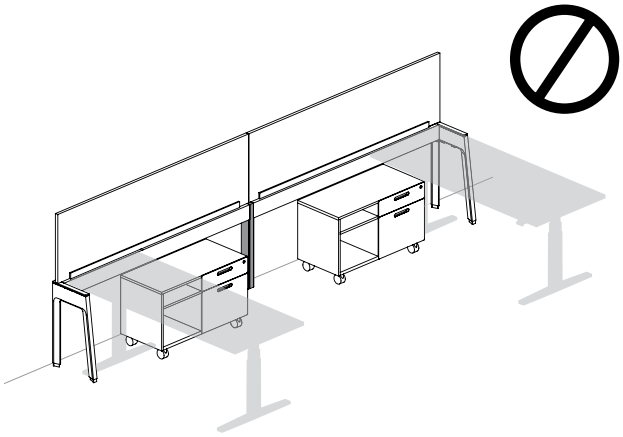

planning with ez fence post for screen connection (continued)

restrictions (continued)

single-sided or shared application (continued)

The EZ Fence Post **cannot** be used at the end of the EZ Fence, no matter if a Floor Screen is added or not

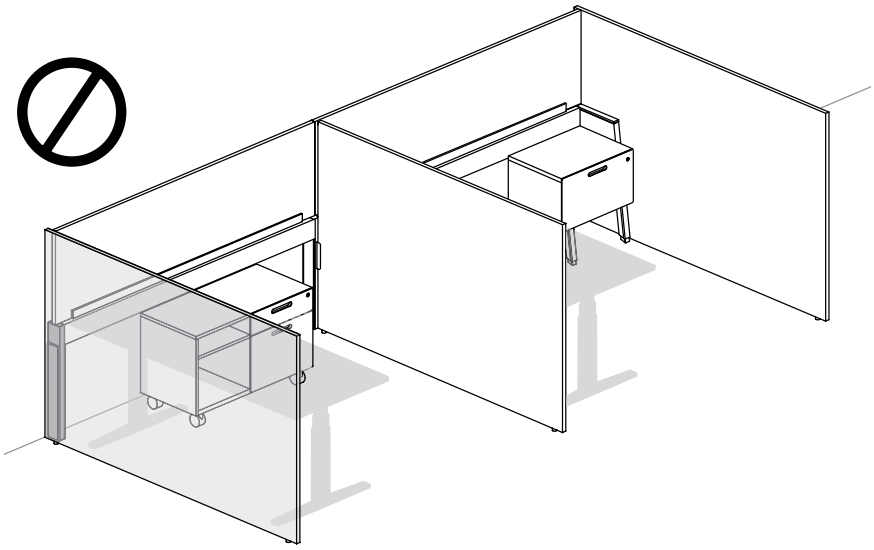

The EZ Fence Post **cannot** provide any support for an EZ Suspended Credenza or Suspended Credenza. However an off-module EZ Suspended Credenza or Semi-Suspended Credenza can be installed next to a post if they are properly supported by other surrounding components

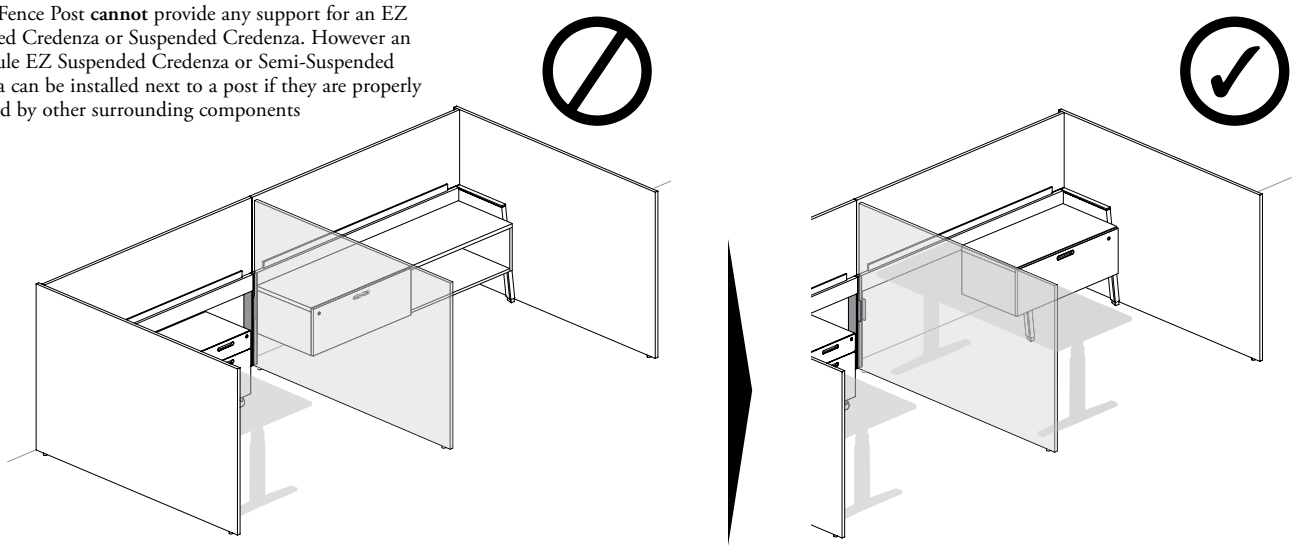

understanding ez structural legs

EZ Structural Legs support and connect the EZ Fence Beams. The Single-Sided EZ Structural Leg is used to create a corridor application or against a wall. The Double-Sided Structural Leg can support a Suspended Credenza on each sides, it is used when the EZ Fence Leg and EZ Suspended Storage are not sufficient.

Two EZ structural Leg styles are available: Single- or Double-Sided

EZ Structural Legs are installed at the end of one beam or between two contiguous beams (JZSBB, JZSBS, JZSCB or JZSCS)

1. Screws and nuts are also included to secure the beam connection to the EZ Structural Leg connector
2. When specified, an EZ Fence Leg Cover hides entirely the upper part of the leg
3. The EZ Upper A-Frame Ready option can also be specified and allows to specify a Single-Side EZ Upper A-Frame (JZSUS) on top of Single-Sided EZ Structural Leg only
4. Come with a Leveler Cover hiding the black leveler for a more refine aesthetic

Provides a workstation leveling range of 3" (-3/16", +2 13/16")

Single-Sided leg comes with two vertical leg profiles: one angled 5 and one straight 6

Double-Sided leg comes with an angled profile 7 on both sides

Two connections can be specified: End (left or right) 8 or In-Line 9

single-sided

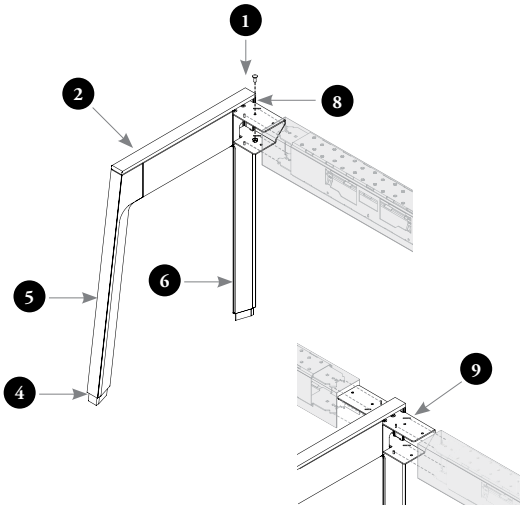

shared

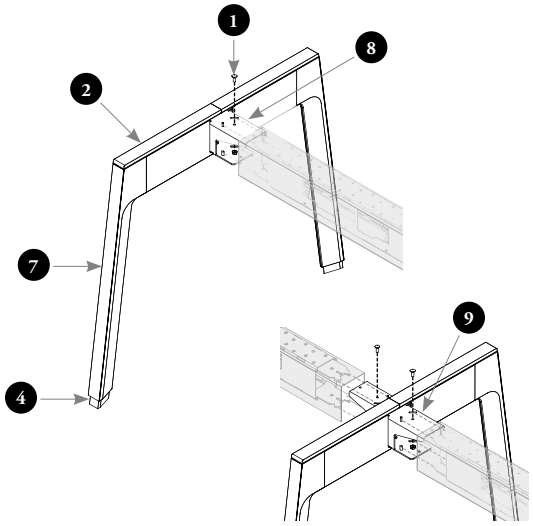

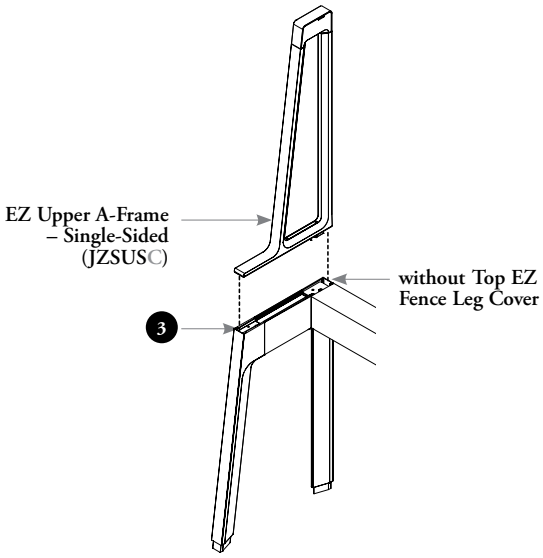

Not available with EZ Structural Leg – Double-Sided (JZSLD)

understanding ez structural leg (continued)

Two configurations are available:

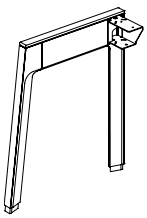

End (E)
EZ Structural Leg – Single-Sided

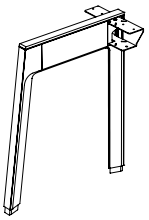

In-Line (I)

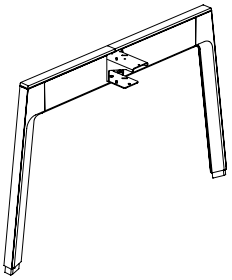

End (E)
EZ Structural Leg – Shared

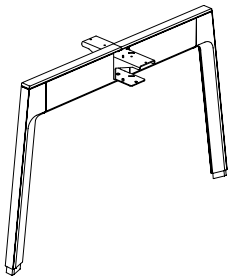

In-Line (I)

end configuration examples

- Used in end of run only
- Can be specified left or right

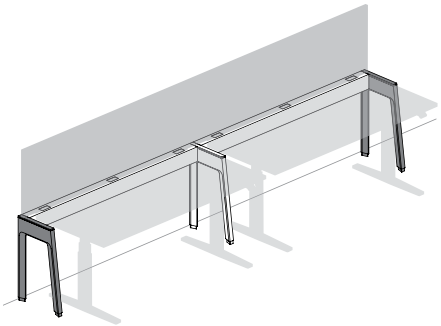

in-line connection examples

Used between two Structural Beams

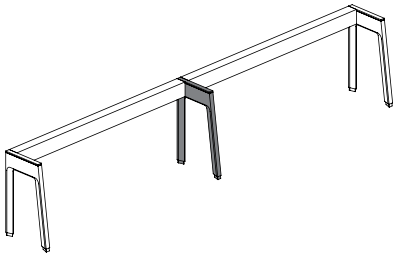

Single-Sided Configuration allows:

- Can be used alone without accessories (screens, suspended storage, etc) and placed against building wall
- Can support Suspended Storage (JNBSF, JNBDF, JNBSO, JNBDO, JNBSOO or JNBDOO)
- The Upper A-Frame can mounted on top of a Single-Sided EZ Structural Leg to allow more applications

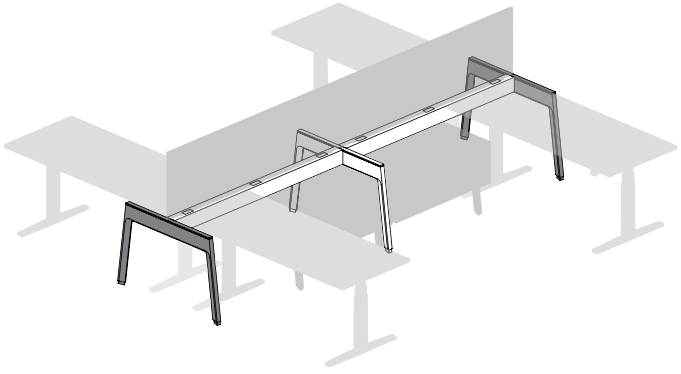

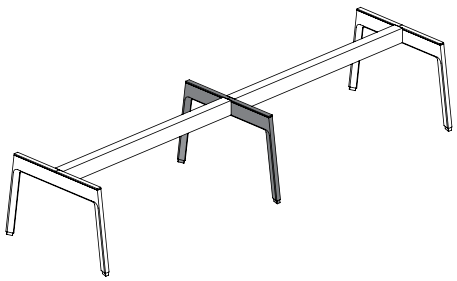

Double-Sided Configuration allows:

- Can be used alone without accessories (screens, suspended storage, etc)
- Can support a Suspended Storage (JNBSF, JNBDF, JNBSO, JNBDO, JNBSOO or JNBDOO) on each sides of the EZ Fence Beam
- A Shared Upper A-Frame (JZSUD) **cannot be** mounted on top of these legs

understanding ez structural legs (continued)

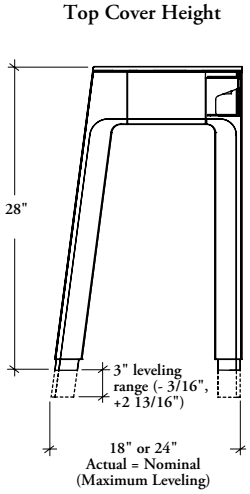

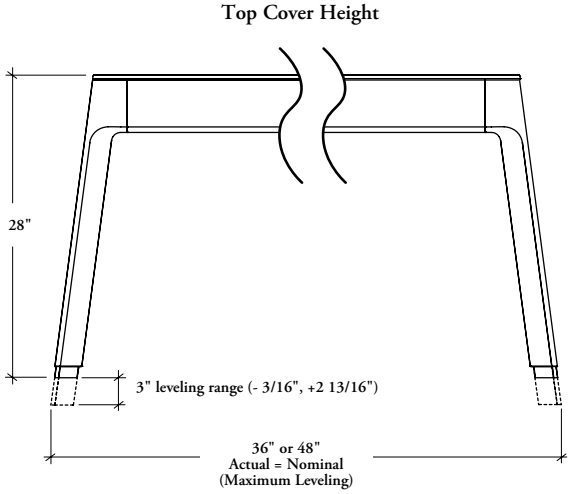

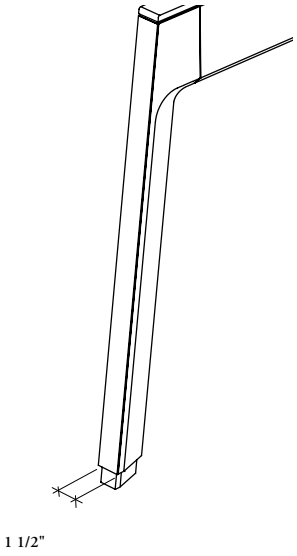

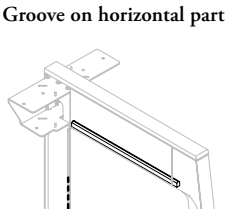

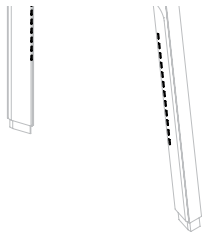

- Two attachment features are integrated:

  The upper **horizontal part** comes with a bottom groove which contributes to support a variety of Leg-Mounted Screens

  The **vertical parts** come with integrated slots which contribute to support other products like Suspended Storage (JNBSF, JNBDF, JNBSO, JNBDO, JNBSOO, JNBDOO, JNBSC or JNBDC) and a variety of Leg-Mounted Screens

  The slots can be hidden with a groove trim (included) when they are not used. The trims come in coordinate color for the Foundation and Mica finishes, and they come in a Soft Gris coordinate for Accent colors

ez structural leg basics

The following outlines the most common applications for EZ Structural Legs in an Expansion Cityline workstation.

All EZ Structural Leg can be used in fully exposed application but some restrictions must be taken in consideration due to the structure stability. Refer to next pages for more details

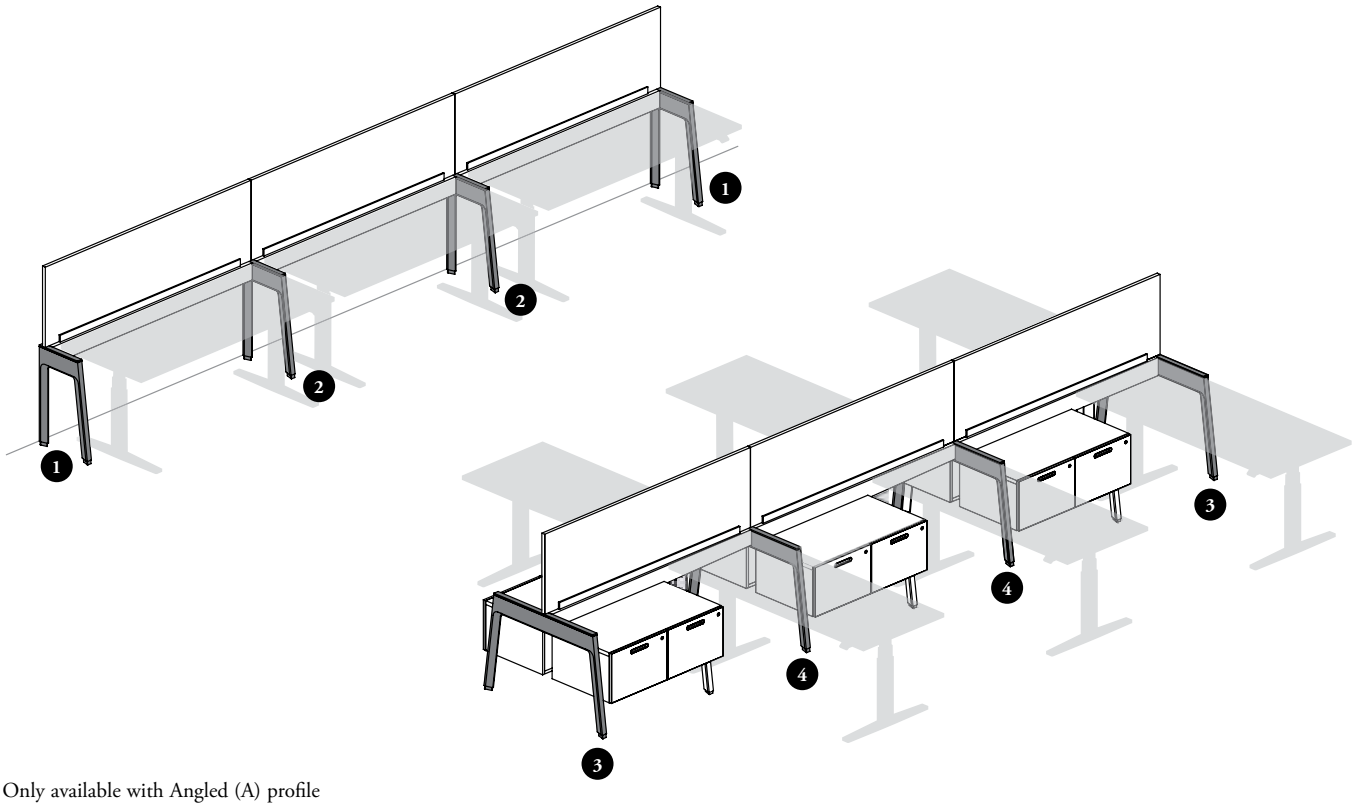

- Only available with Angled (A) profile
- Height is 28 3/16" from the finished floor to the top of the Top Cover with a leveling range of 3"
- Comes with a Leveler Cover to hide the black leveler for aesthetic look. The Leveler Cover will match with the leg finish

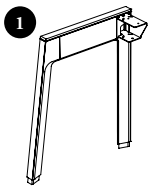

End – Left (L) or End – Right (R)

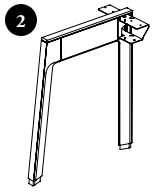

In-Line (I)

EZ Structural Leg – Single-Sided (JZSLS)

- Support EZ Fence Beams (JZSBB or JZSBS) or Chicago EZ Fence Beams (JZSCB or JZSCS) in end (left or right) or in-line configuration
- Available in depths 18" or 24"
- When specified, a Top Cover is included

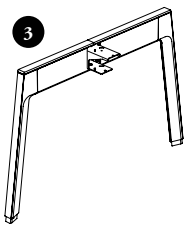

End (E)

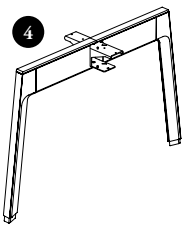

In-Line (I)

EZ Structural Leg – Double-Sided (JZSLD)

- Support EZ Fence Beams (JZSBB or JZSBS) or Chicago EZ Fence Beams (JZSCB or JZSCS) in end (left or right) or in-line configuration to maintain stability
- Available in depths 36" or 48"
- Two Top Covers are included

planning with ez structural legs

Although the EZ Strucutral Leg – Single-Sided (JZSLS) is the recommended leg to use against a building wall the EZ Fence – Leg Low Height (JZSFL) or EZ Fence Leg (JZSFS) can also be used for specific applications that required a EZ Fence Leg. In these cases, the beam will be further from the wall

single-sided configuration against a wall

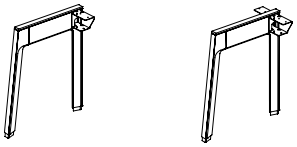

EZ Structural Leg – Single-Sided (JZSLS)
End – Left (L) or
End – Right (R) or In-Line (I)

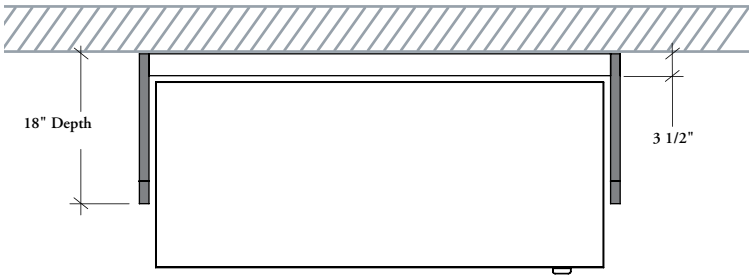

shared configuration against a wall

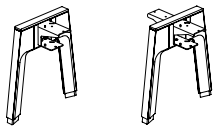

EZ Fence Leg – Low-Height (JZSFL)
End (E) or In-Line (I)

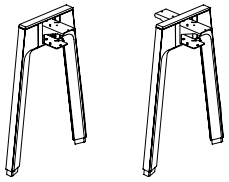

EZ Fence Leg (JZSFS)
End (E) or In-Line (I)

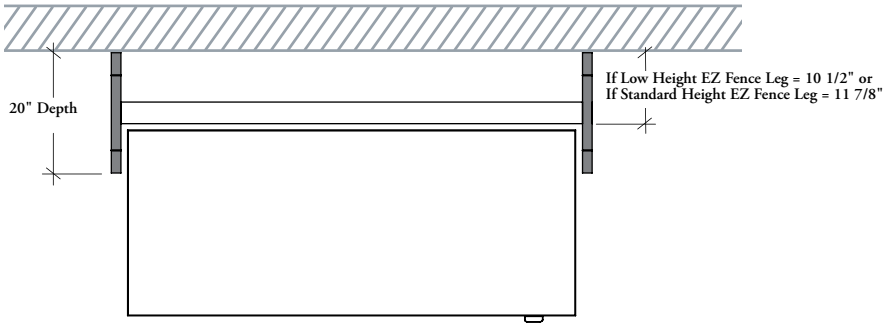

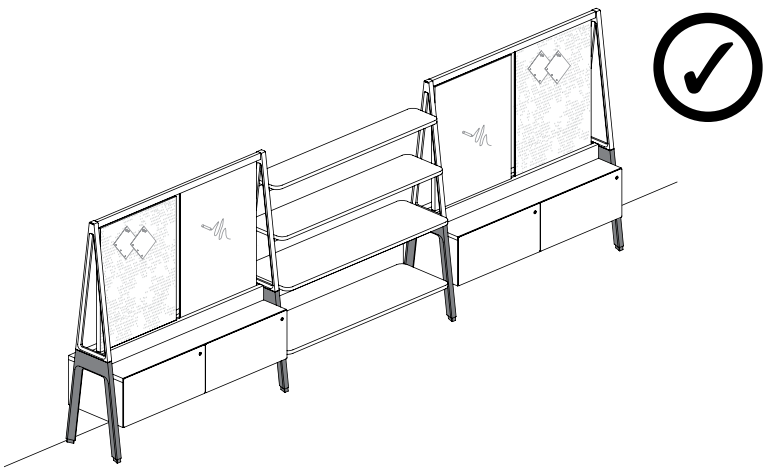

planning with ez structural legs (continued)

mandatory stabilizer for single-sided applications

When planning structure with a EZ Structural Leg – Single-Sided, a minimum span of two EZ Beams must be respected and it is **mandatory for each leg to be stabilized d**epending on the space division specified on the EZ Beam, different stabilizers can be used

planning with modesty screens with foot – EZ beam-mounted A or floor screens with foot – EZ beam-mounted B

No other stabilizer is required with these products since they provide space division and stability at the same time

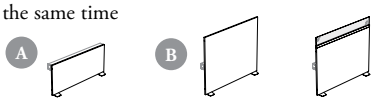

A JZSMSBF

B JZSFSBF JZSMGBF

planning with elevated screen – EZ fence beam-mounted

List of stabilizers for this application:

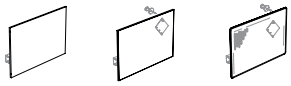

JZSESB JZSEFB JZSEEB

1. – One Run-Off for EZ Fence (JZWRF)
2. – One 24" deep Suspended Credenza (JNBSF, JNBSO or JNBSC)
3. – One Table Attached Stabilizer for Structure (JNDST). For more details on these product, refer to page 268
   - – Floor Screen – EZ Post-Mounted (JZSFSP or JZSFGP)**
   - – Floor Screen – Leg-Mounted (JNSFSL or JNSFGO)**
   - – Floor Screen with Metal Towers – EZ Fence Post-Mounted (JZSFOP, JZSFDP or JZSFTP)
   - – Floor Screen with Metal Towers – Leg-Mounted (JNSFOL, JNSFDL or JNSFTL)
   - – Elevated Screen – Leg-Mounted (JNSESL, JNSEFL or JNSEEL)***
   - – One 18" or 24" deep Semi-Suspended Credenza (JNBDF or JNBDO)*
   - – Storage Cabinet for Height-Adjustable Run-Off (JNHSC)

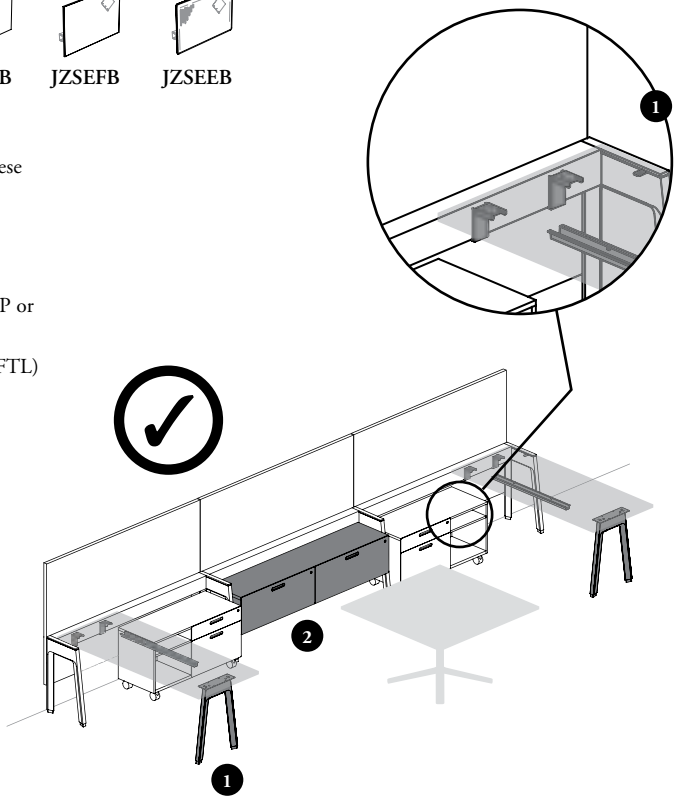

restrictions

*** Stability with Semi-Suspended Credenza Chart**

	JNBDOO	JNBDO	JNBDF	
18" Depth	No	No	No	Yes
24" Depth	No	Drawer Next to EZ Structural Leg	Yes	Yes

** • Minimum 42" wide and same height as the Elevated Screen – EZ Fence Beam-Mounted Screens

*** • Minimum 36" wide same height and same material as the Elevated Screen – EZ Fence Beam-Mounted Screens

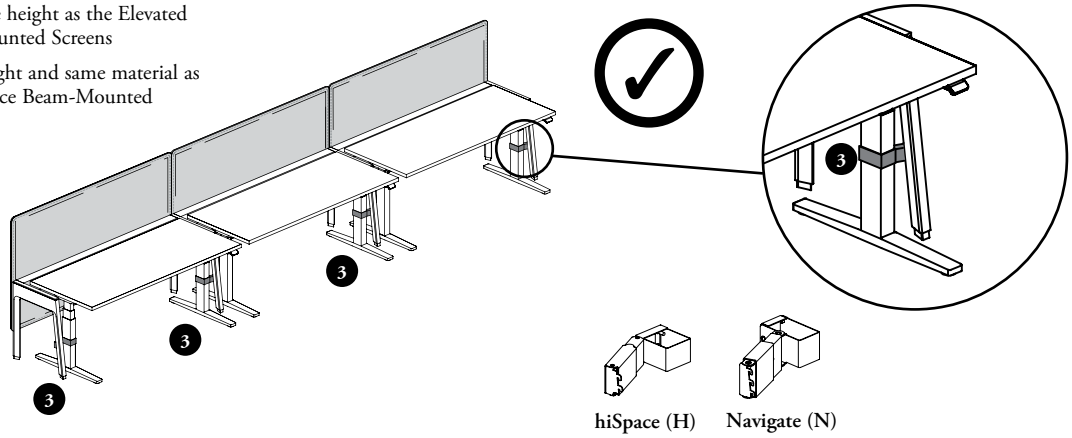

hiSpace (H) Navigate (N)

planning with ez structural legs (continued)

mandatory stabilizer for single-sided applications (continued)

planning with add-on screens – EZ fence beam-mounted A, modesty screens – EZ beam-mounted with levelers B or without any space division on the EZ beam

List of stabilizers for this application:

– One Run-Off for EZ Fence (JZWRF)

– One Suspended Credenza (JNBSF, JNBSO or JNBSC)

– One Table Attached Stabilizer for Structure (JNDST). Refer to page 266 for more details

1 – One Wall Anchored Stabilizer for Structure (JNDSWB). Refer to page 268 for more details

2 – Floor Screen – EZ Post-Mounted (JZSFSP or JZSFGP)****

– Floor Screen with Metal Towers – EZ Fence Post-Mounted (JZSFOP, JZSFDP or JZSFTP)

3 – Floor Screen – Leg-Mounted (JNSFSL or JNSFGO)****

– Floor Screen with Metal Tower – Leg-Mounted (JNSFOL, JNSFDL or JNSFTL)

– Elevated Screen – Leg-Mounted (JNSESL, JNSEFL or JNSEEL)****

4 – One Semi-Suspended Credenza (JNBDF or JNBDO)*

– Storage Cabinet For Height-Ajustable Run-off (JNHSC)

A 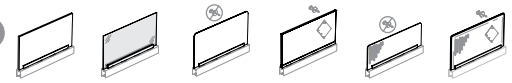

JZSASB JZSAGB JZSAXB JZSAFB JZSAZB JZSAEB

B

JZSMSBL

restrictions

*** Stability with Semi-Suspended Credenza Chart**

	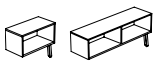 JNBDOO	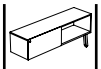 JNBDO	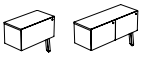 JNBDF	
18" Depth	No	No	No	Yes
24" Depth	No	Drawer Next to EZ Structural Leg	Yes	Yes

******** Minimum 36" wide same height and same material as the Add-On Screen – EZ Fence Beam-Mounted

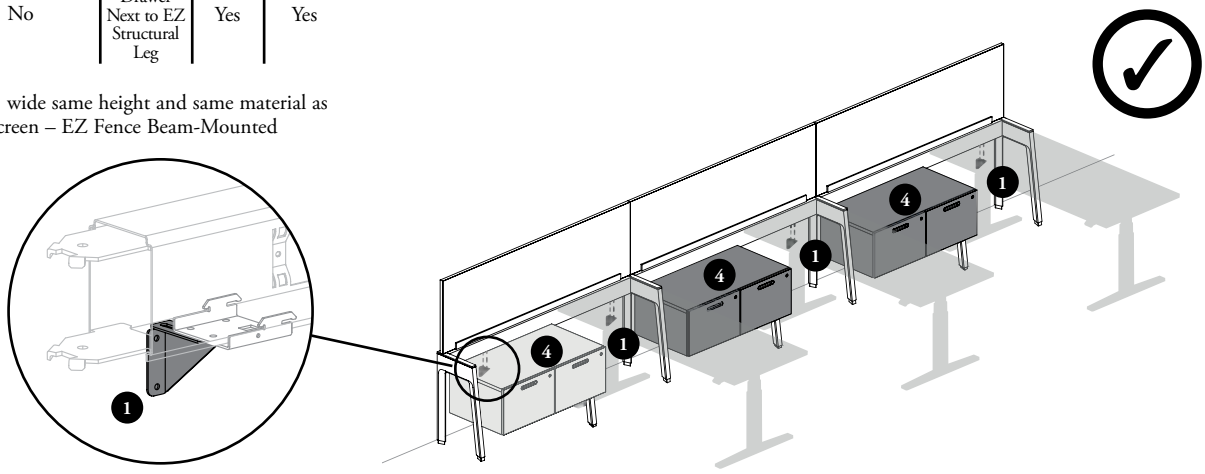

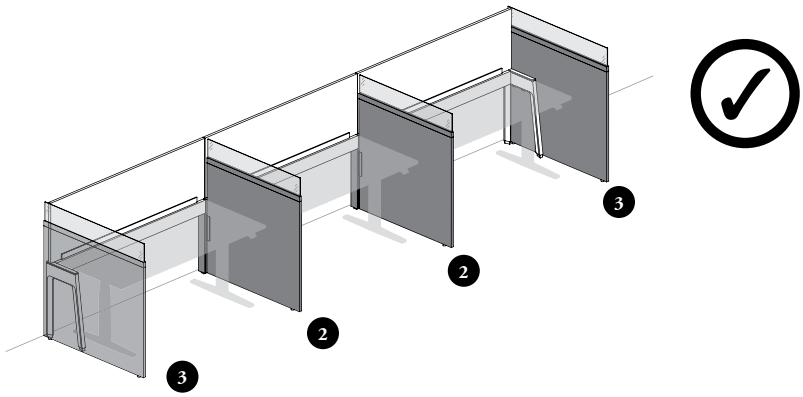

planning with ez structural legs (continued)

mandatory stabilizer for single-sided applications (continued)

planning with EZ upper A-frame or floor screens with levelers – EZ beam-mounted A

List of stabilizers for this application:

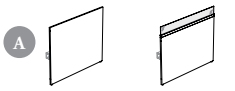

A JZSFSBL JZSMGBL

1 – One Run-Off for EZ Fence (JZWRF)
– One Table Attached Stabilizer for Structure (JNDST). Refer to page 266 for more details

2 – One Wall Anchored Stabilizer for Structure (JNDSWB). Refer to page 268 for more details
– Modesty Screens with Foot – EZ Beam-Mounted (JZSMSB)

3 – Floor Screens with Foot – EZ Beam-Mounted (JZSFSBF or JZSFGBF)
– Floor Screen with Metal Towers – Leg-Mounted – One User (JNSFOL, JNSFDL or JNSFTL)
– Floor Screens – Leg-Mounted (JNSFSL or JNSFGO)*****
– Storage Cabinet For Height-Ajustable Run-off (JNHSC)

restrictions

***** Minimum 36" wide

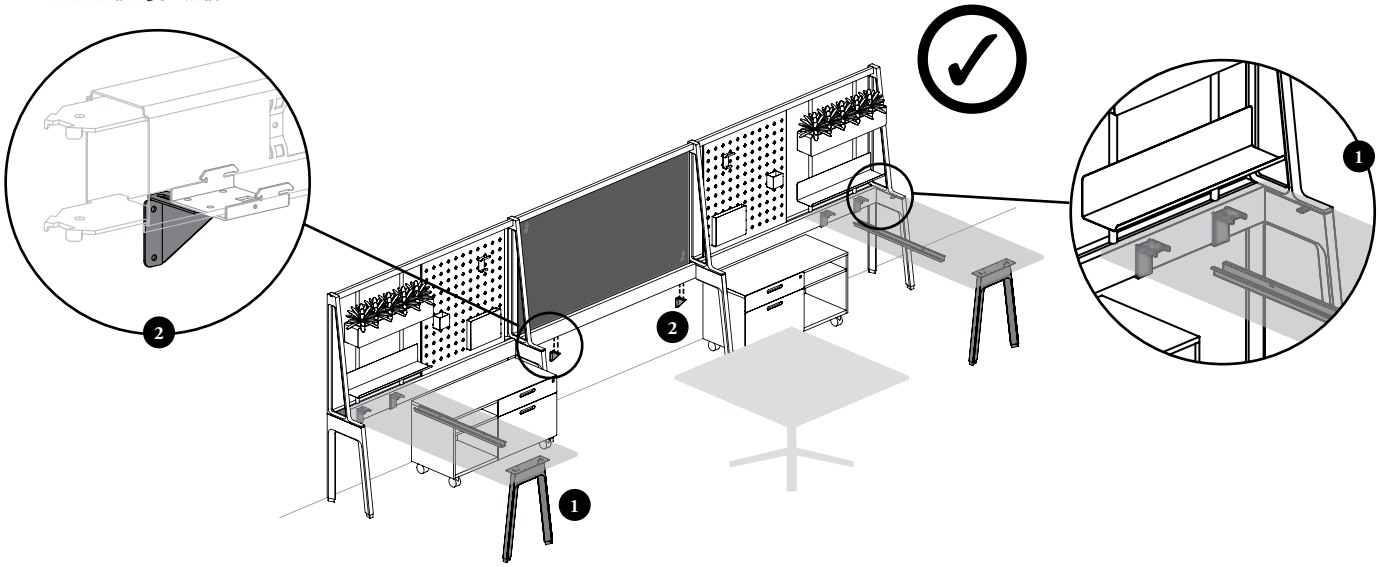

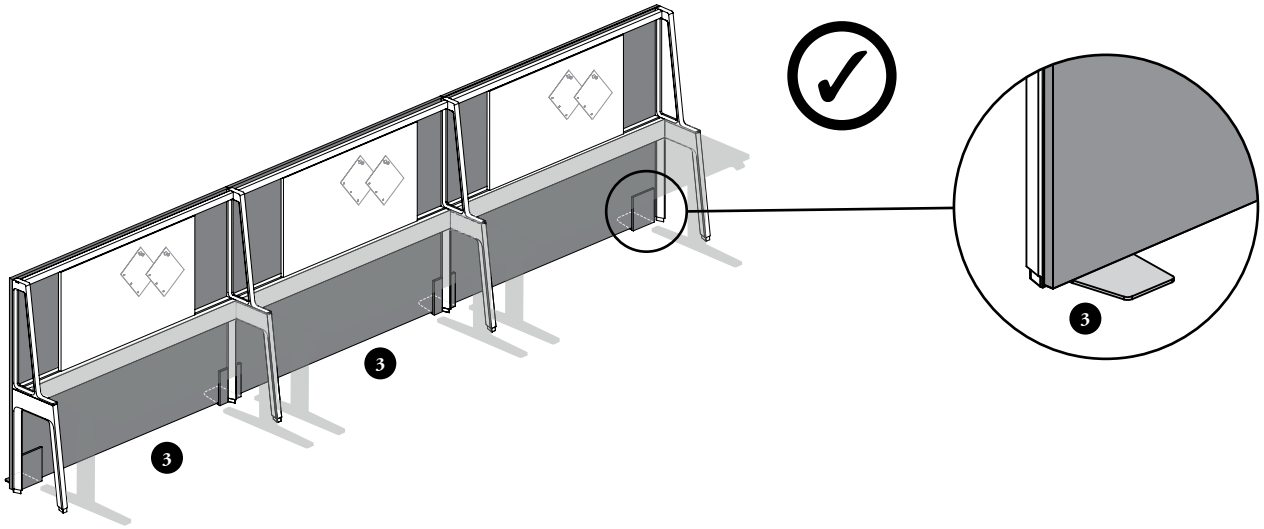

planning with ez structural legs (continued)

shared applications

EZ Fence Legs and Structural Legs – Double-Sided EZ can be combined in the same EZ Fence. It is done to benefit from the small EZ Fence Leg footprint wherever possible

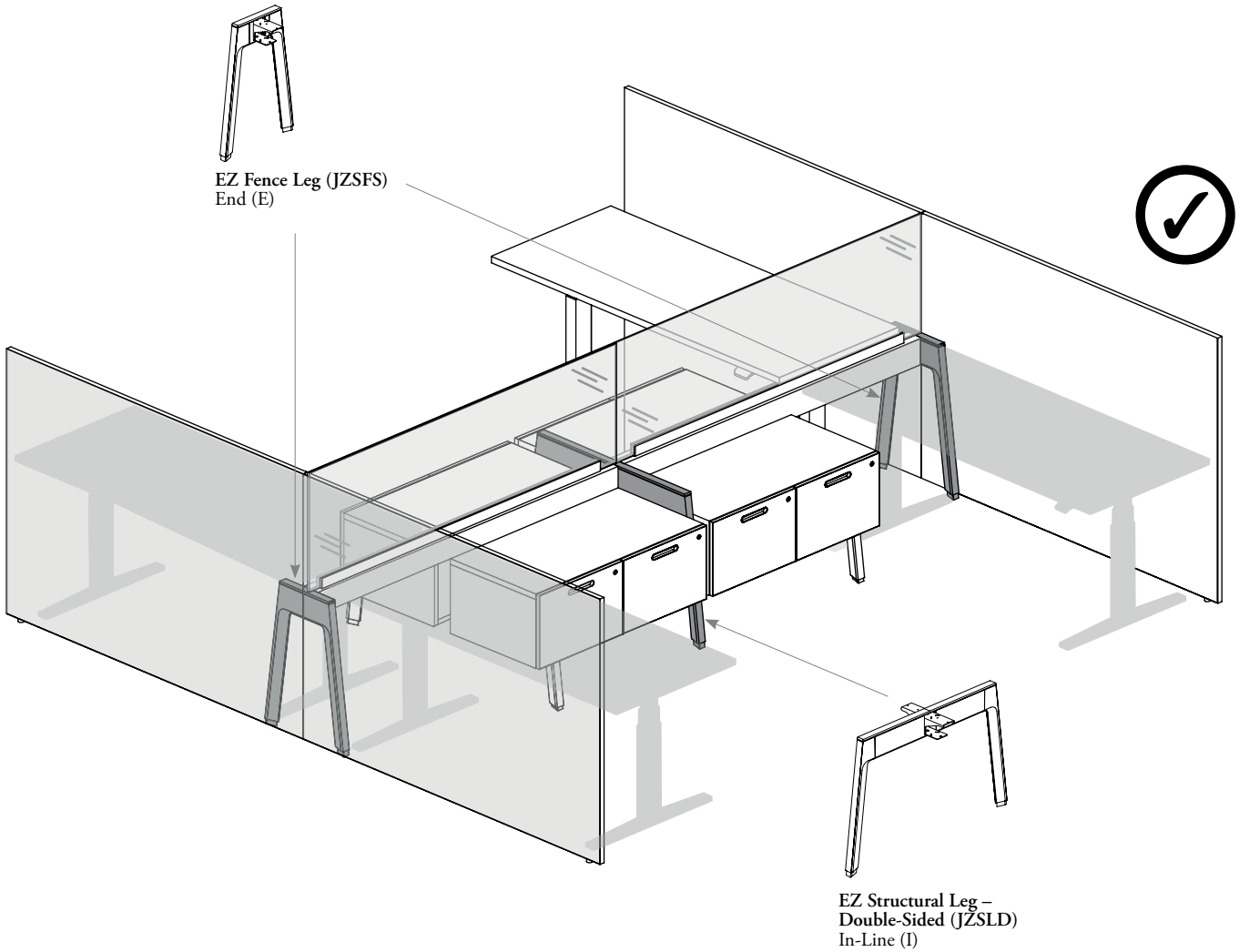

planning with ez structural legs (continued)

single-sided & shared applications

- The Suspended Credenza can be fixed to an EZ Structural Leg Single- or Double-Sided
- **NOTE:** Suspended Credenza must be specified the same depth as the EZ Structural Leg on which it is mounted (half the depth for a double-sided leg)
- The following Suspended Credenzas (JNBSF, JNBDF, JNBSO, JNBDO, JNBSOO, JNBDOO, JNBSC or JNBDC) must be specified with None Leg (NN) Width Reduction option. For more details refer to the Beam-Mounted Storage section

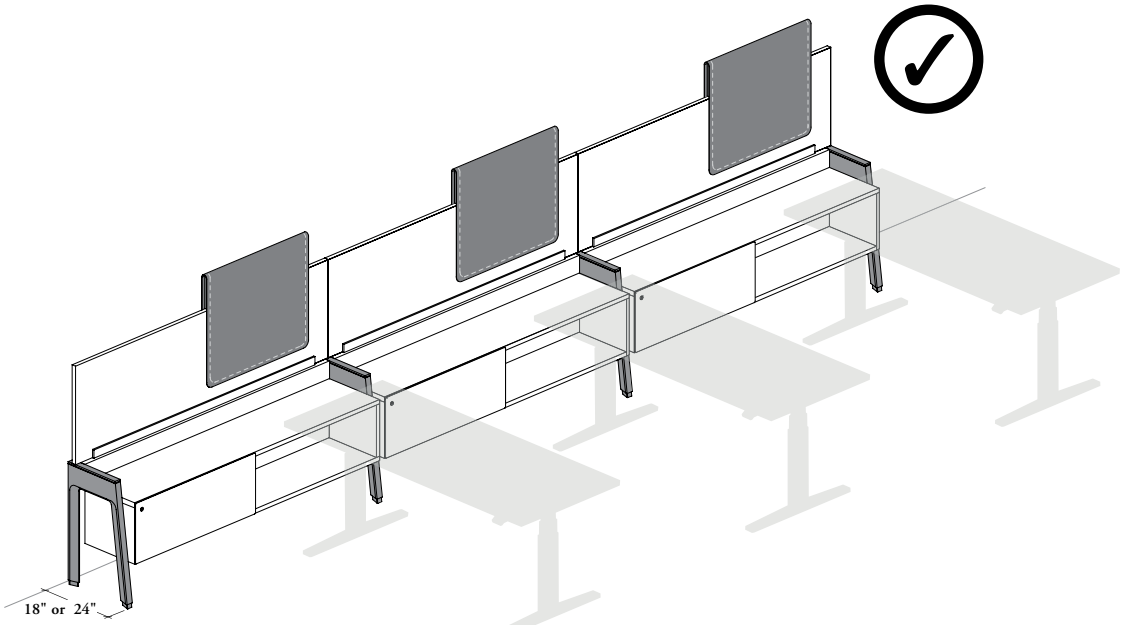

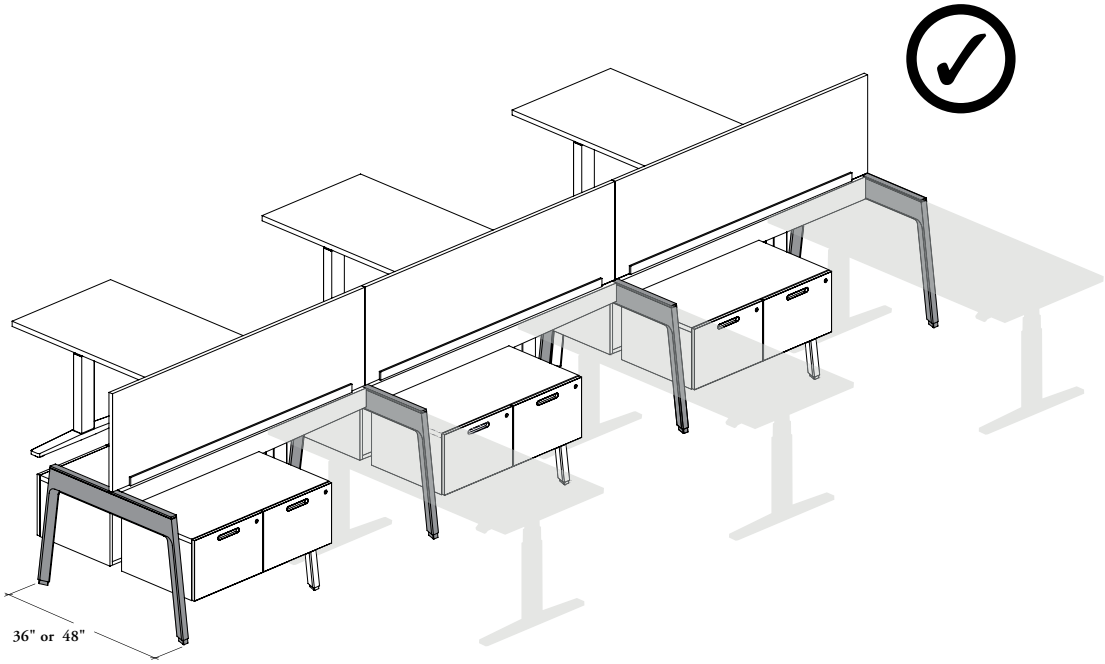

planning with top cover & upper A-frame ready configurations – ez structural legs

- The EZ Fence Leg Cover – Top is offered as an option on all leg styles and are also offered separately for re-configuration purposes, refer to page 96 for more details
- Two mounting options are available dependently on leg style:

top cover (C) for single-sided configuration

- Finishes the top of legs
- When specified, the leg includes one leg cover that hides entirely the upper part of the leg
- Available with EZ Structural Leg – Single-Sided (JZSLS)
- Applicable with In-Line and End configurations

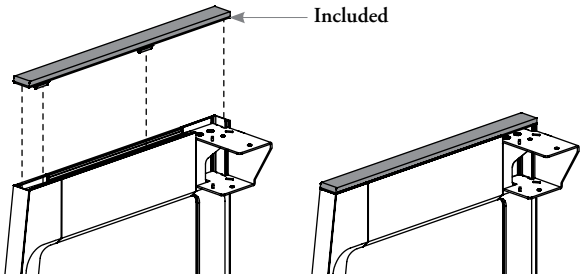

top cover (C) for double-sided configuration

- Finishes the top of legs
- When specified, the leg includes two leg cover sections that hide entirely the upper part of the leg
- Available with EZ Structural Leg – Double-Sided (JZSLD)
- Applicable with In-Line and End configurations

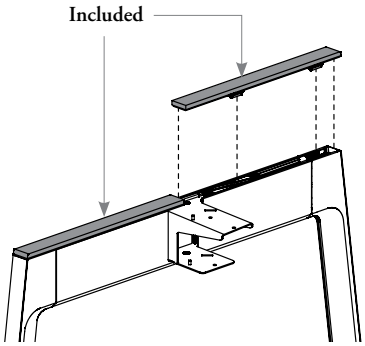

upper A-frame ready (U) for single-sided configuration only

- Can be specified with 18" depth only
- Only Upper A-Frame – Single-Sided (JZSUS) is compatible
- Available with EZ Structural Legs – Single-Sided (JZSLS) only
- Applicable with In-Line or End configurations
- When specified, the Upper A-Frame is **not** included and must be specified separately. Refer on page 80 for more details.

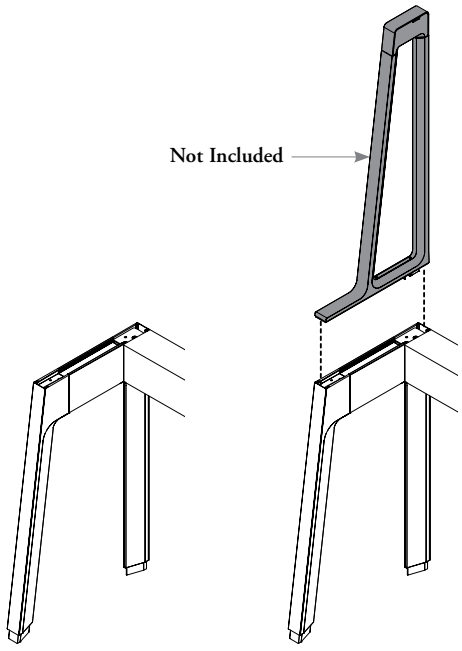

understanding ez upper A-frames

EZ Upper A-Frames are mounted on top of EZ Fence Legs or EZ Structural Legs. They allow the installation of the Lift & Drop Tiles and Shelves

ez upper A-frames

Two EZ Upper A-Frame configurations are available: Single-Sided (JZSUS) or Shared (JZSUD)

EZ Upper A-Frames can be mounted on top of a end or in-line EZ Fence Legs – Low Height (JZSFL – 17" deep) 1 or Standard Height (JZSFS – 20" deep) 2 or 18" deep EZ Structural Legs – Single-Sided (JZSLS) 3

4 Screws are also included to secure the frame to the leg. Screws are hidden with a colormatch aluminum cover

5 **No** Top Cover are needed on the leg when an Upper A-Frame is specified. The Upper A-Frame covers entirely the top of the leg

When applicable, the legs must be specified with EZ Upper A-Frame Ready (U) top option to allow EZ Upper A-Frame installation

Datum Heights include 56", 57" or 66"

Single-Sided style comes with two vertical frame profiles: one angled 6 and one straight 7

Shared style comes with an angled profile 8 on both sides and can be specified 18" Low Height (L) or 28" Standard Height (S) beam height option

18" low beam height

shared

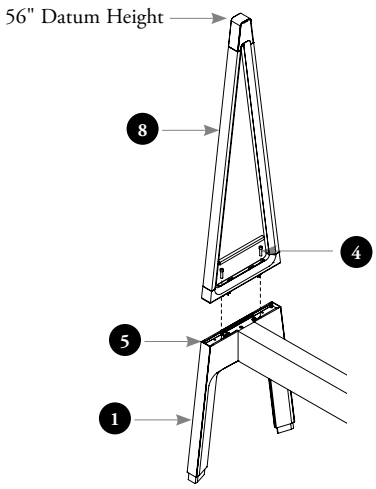

End Configuration

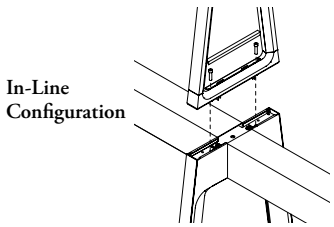

28" standard beam height

shared

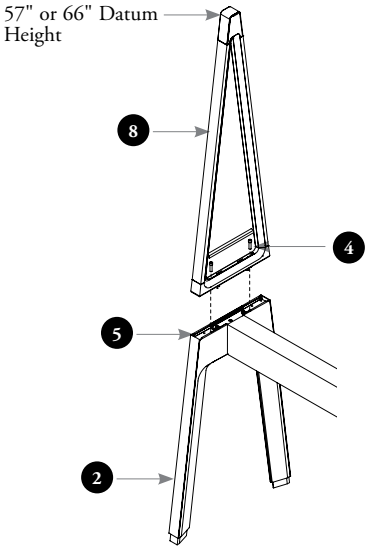

End Configuration

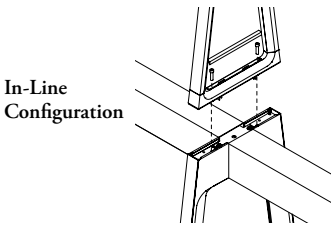

single-sided

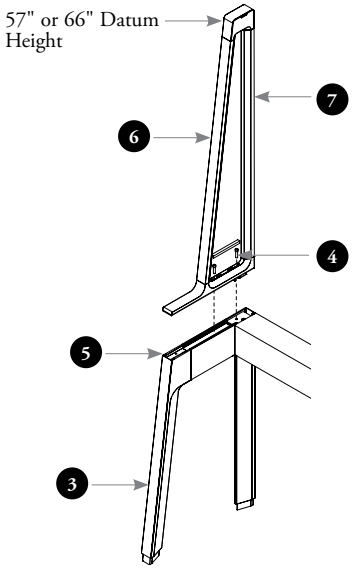

End Configuration

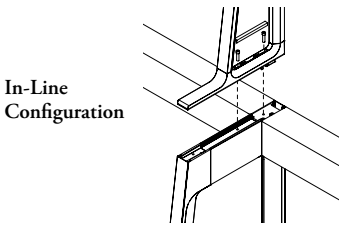

understanding ez upper A-frames (continued)

- Two styles are available:
  - EZ Upper A-Frames for Lift & Drop Tiles
  - EZ Upper A-Frames for Laminate Shelves
- These two styles can be mixed on the same layout

ez upper A-frames for lift & drop tiles

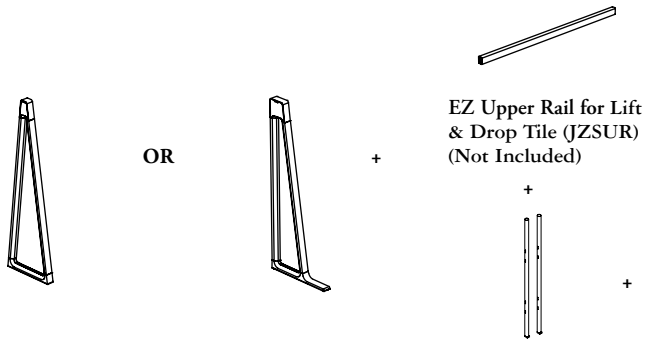

EZ Upper A-Frame Leg – Shared (JZSUD)

OR

EZ Upper A-Frame Leg – Single-Sided (JZSUS)

+

EZ Upper Rail for Lift & Drop Tile (JZSUR) (Not Included)

+

Lift & Drop Vertical Poles (JZTPS) (Not Included)

+

Lift & Drop Tile (JZT_) (Not Included)

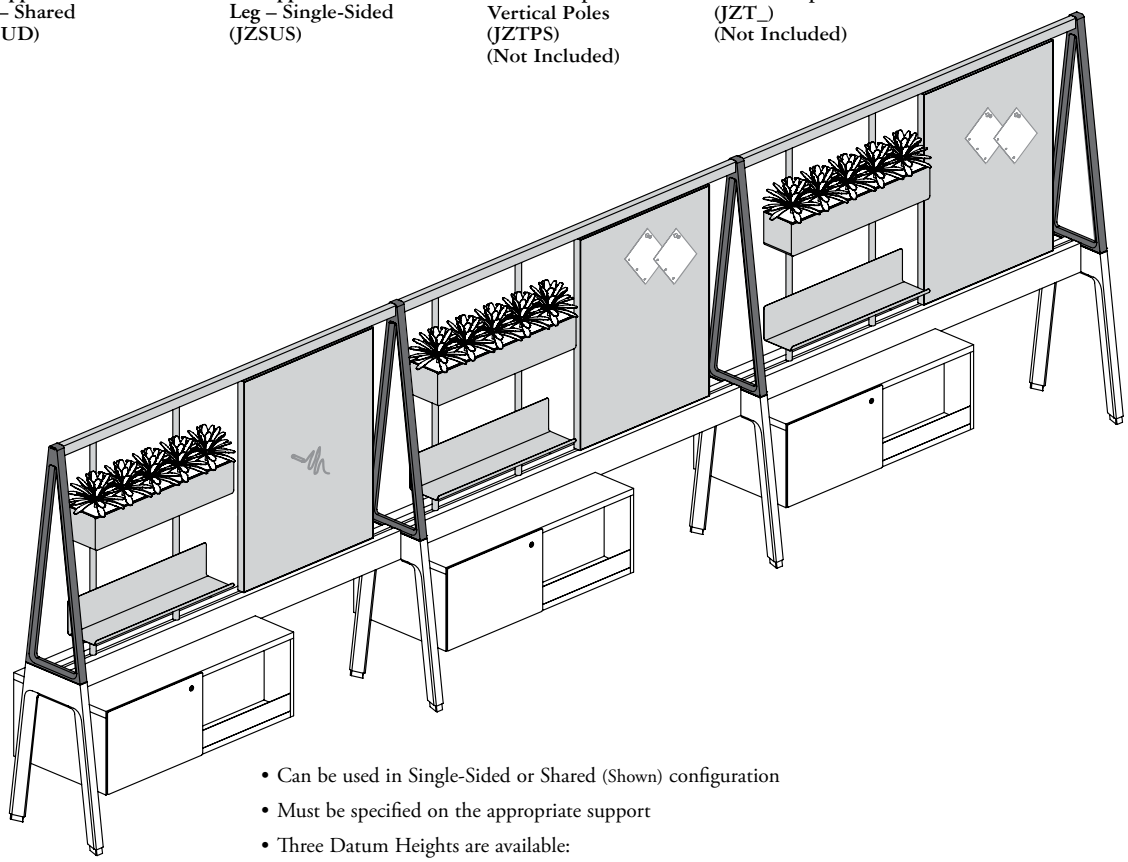

- Can be used in Single-Sided or Shared (Shown) configuration
- Must be specified on the appropriate support
- Three Datum Heights are available:
  - 56" datum height on 18" low height EZ Fence Structure
  - 57" or 66" datum heights on 28" standard height EZ Fence Structure
- Allow the mounting of the Upper Rails for Lift & Drop Tiles
- When an EZ Upper A-Frame for Lift & Drop Tile and Upper Rail are specified on an EZ Fence Structure, the EZ Fence Beam or Chicago EZ Fence Beam must be specified with Lift & Drop Tile Configuration (T) to allow Lift & Drop Vertical Poles or Lift & Drop Tile installation
- Only a shared configuration can support Two Planter Boxes – EZ Upper A-Frame Mounted (JZAPUT)

understanding ez upper A-frames (continued)

ez upper A-frames for laminate shelves

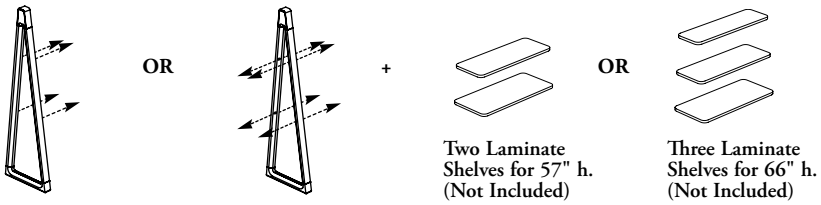

Shelves on One Side (O)

Shelves on Two Sides (T)

EZ Upper A-Frame for Laminate Shelves – Shared (JZSULS)

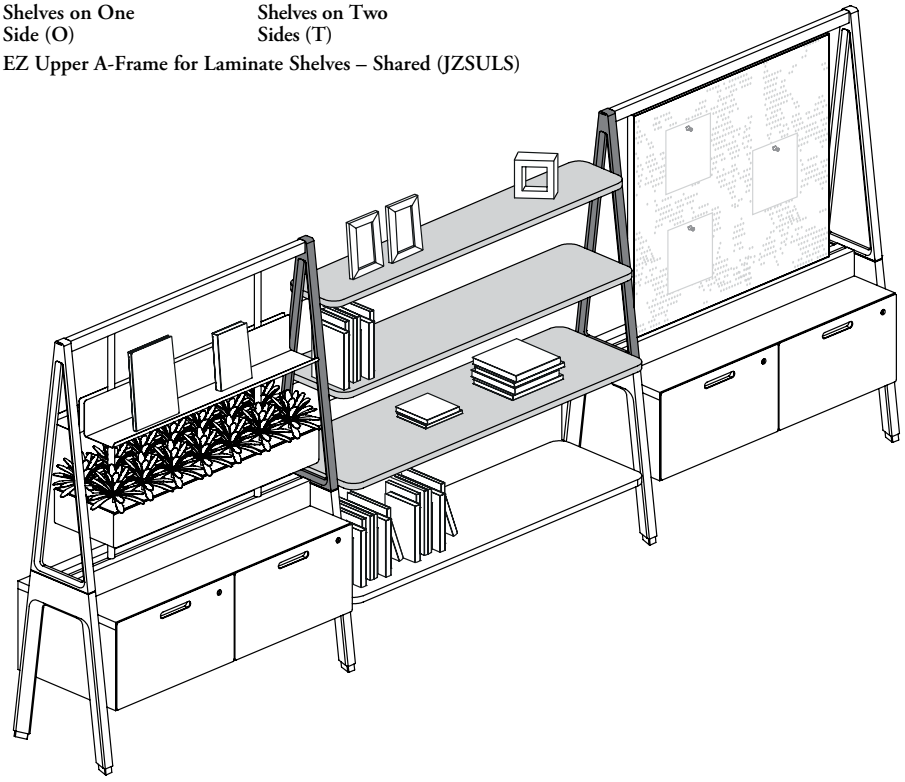

- Only applicable with Shared configuration
- Only 57" or 66" datum heights and 28" standard height EZ Fence Structure are available
- These EZ Upper A-Frames come integrated inserts which contribute to support reinforcing bars of laminate shelves. They can be specified one side (O) (Shown) for end frame or two sides (T)
- The Laminate Shelves – EZ Upper A-Frame Mounted (JZTBS) must always be specified with the Upper A-Frame for Laminate Shelves
- Can also support Two Planter Boxes – EZ Upper A-Frame Mounted (JZAPUT)

Accessories Depths and Positions – EZ-Upper A-Frame Mounted

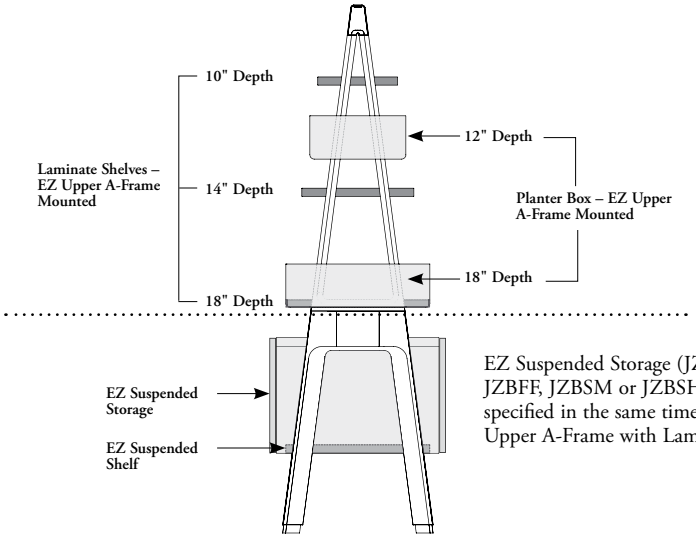

Accessories – EZ Fence or Leg-Mounted

EZ Suspended Storage (JZBSO, JZBDO, JZBFF, JZBSM or JZBSH) can also be specified in the same time that the EZ Upper A-Frame with Laminate Shelves

ez upper a-frame for lift & drop tile and accessory basics

EZ Upper A-Frame for Lift & Drop Tiles and Accessories is fixed onto EZ Fence Legs or EZ Structural Leg – Single-Sided to provide up to 66" high casual space division and storage. It offer a variety of possibilities.

To complete the EZ Upper A-Frame Structure, the EZ Upper Rail, Vertical Poles, Lift & Drop Tiles and Lift & Drop Vertical Poles Mounted Accessories are **not** included and can be specified separately. Fore more details, refer on the next page for EZ Upper Rail and refer to EZ Lift & Drop Tiles and Shelves for other products

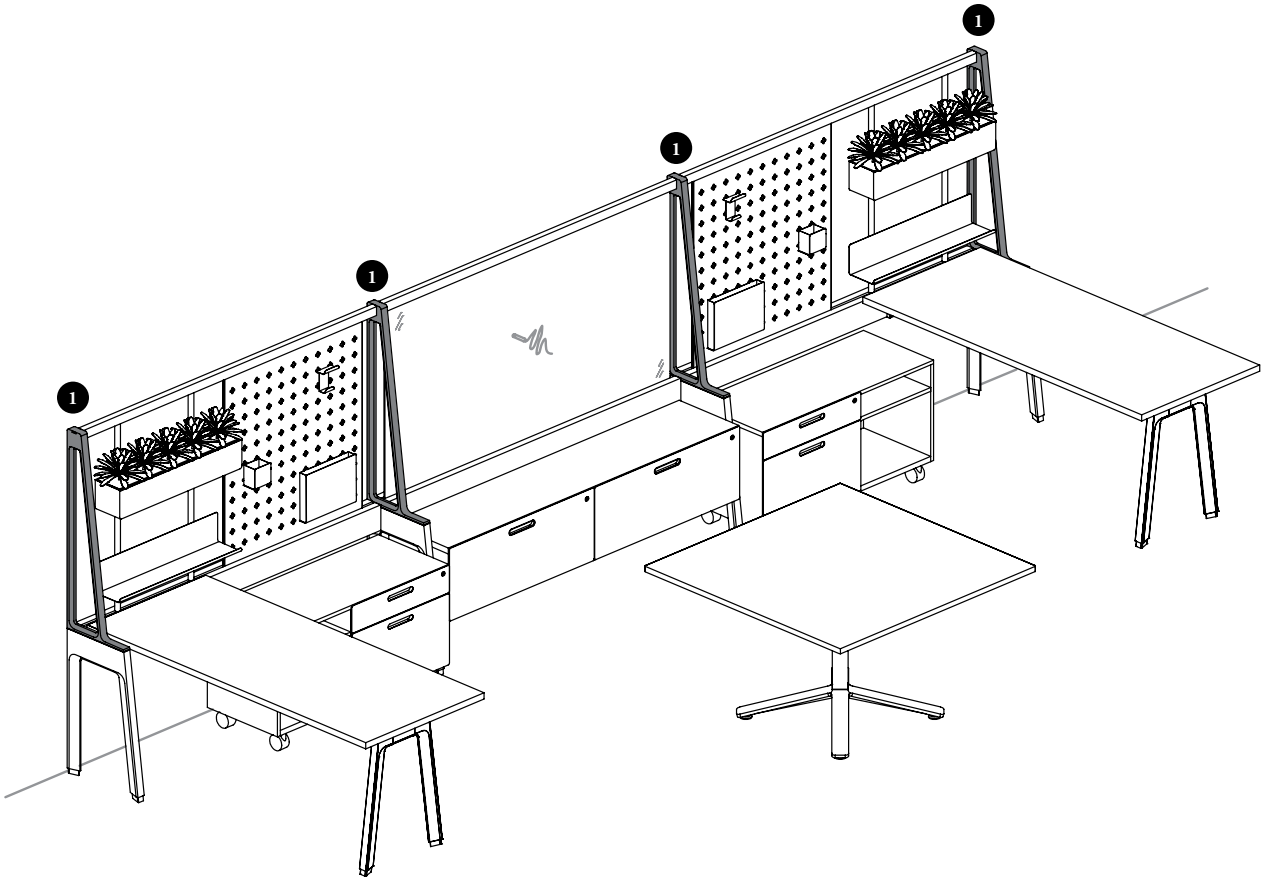

EZ Upper A-Frame – Shared (JZSUD)

- Can be mounted on EZ Fence Legs – Low Height (JZSFL) or EZ Fence Legs (JZSFS) in end (left or right) or in-line configuration
- Available in 28" Standard Height (C) or 18" Low Height (L) Beam Height
- Available in leg depths 17" and 20"
- Available in 56", 57" or 66" Datum Height

1

EZ Upper A-Frame – Single-Sided (JZSUS)

- Can be mounted on EZ Structural Leg – Single-Sided (JZSLS) in end (left or right) or in-line configuration to maintain stability
- Available in 28" Standard Height (C) Beam Height only
- Available in leg depth 18" only
- Available in 57" or 66" Datum Height

ez upper rail for lift & drop tile basics

The EZ Upper Rail for Lift & Drop Tile is installed between two Upper A-Frames – Single-Sided or Shared to support Vertical Poles and Lift & Drop Tiles.

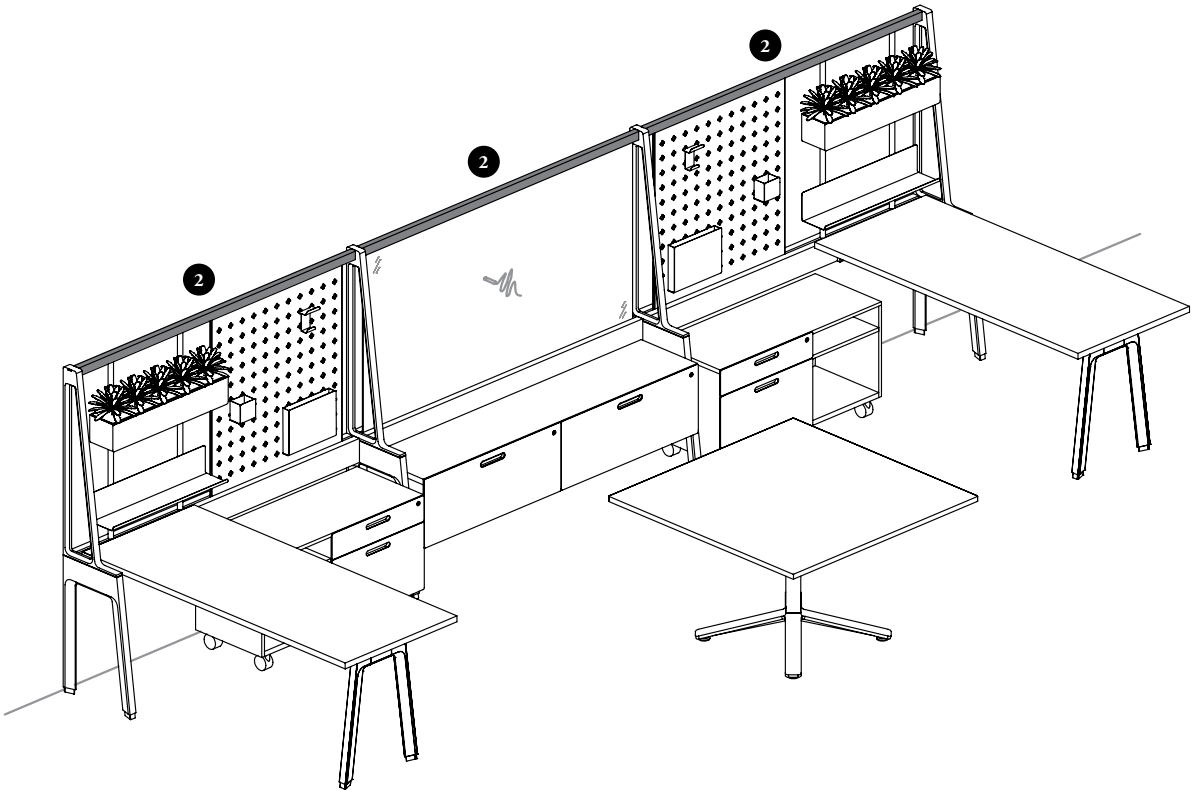

EZ Upper Rail for Lift & Drop Tile (JZSUR)

- Runs at 56" in low height application or at 57" or 66" in standard height application
- Includes groove and gaskets for insertion of the Lift & Drop Vertical Poles (JZTPS) and Lift & Drop Tile (JZT_)
- Available in widths 48"to 84" (6" increments)
- Available in 56", 57" or 66" Datum Height. Although the rail is universal, it is available in 56", 57" and 66" datum heights to ease specification in software

ez upper rail for lift & drop tile applications

- Must be specified on-module to reach the two Upper A-Frames
- Can be installed on each sides of an in-line Upper A-Frame Structure, and on one side of an end configuration

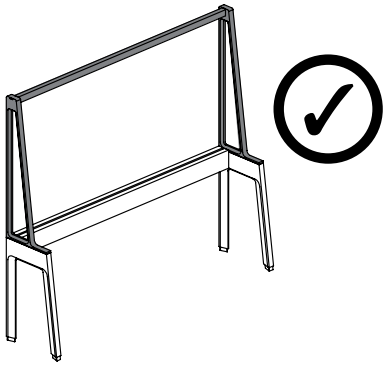

Can be mounted between two Upper A-Frames – Single-Sided (JZSUS) (Shown) or Shared (JZSUD)

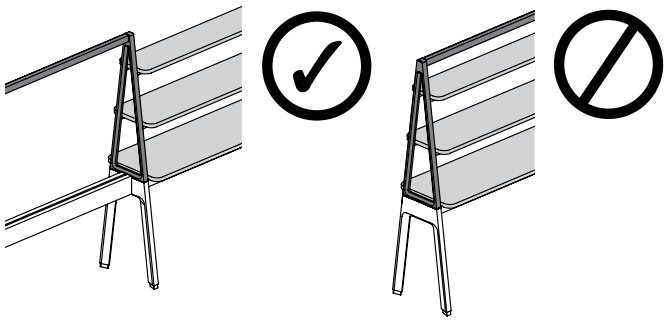

Can be mounted on Upper A-Frame for Laminate Shelves – One Side configuration only (JZSULSO)

ez upper A-frame for laminate shelves basics

The EZ Upper A-Frame for Laminate Shelves is fixed onto EZ Fence Legs to provide casual space division, storage, accessories and shelving that are available in a variety of configurations.

To complete the EZ Upper A-Frame for Laminate Shelves Structure, the Laminate Shelves (JZTBS) must be specified separately. Planter Boxes (JZAPU) can also be specified separately. Refer EZ Lift & Drop Tiles & Shelves section for more details

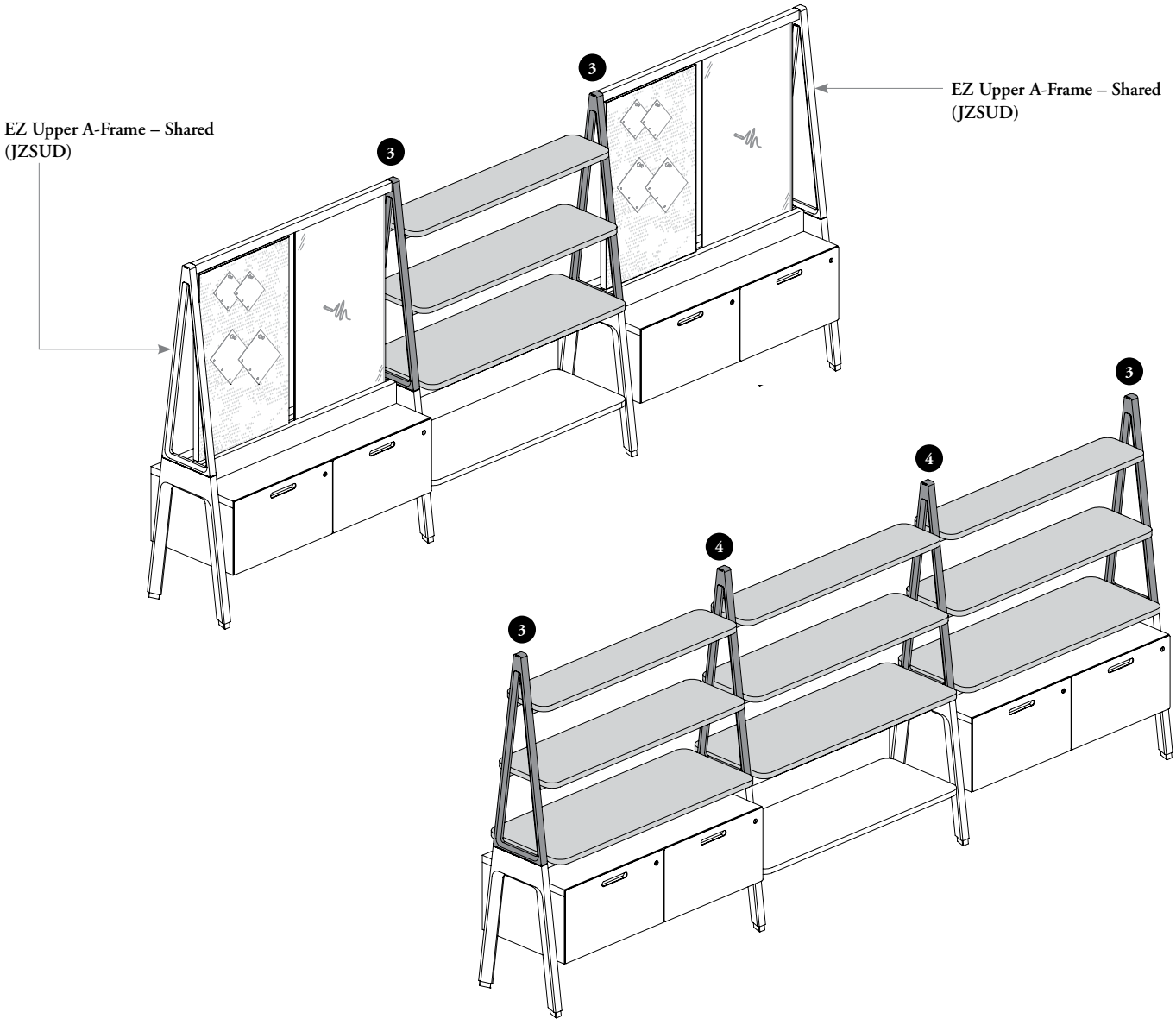

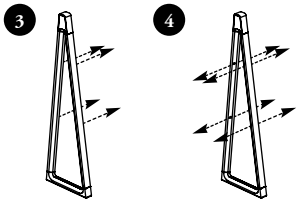

Shelves on One Side (O)

Shelves on Two Sides (T)

EZ Upper A-Frame for Laminate Shelves – Shared (JZSULS)

- Can be mounted on EZ Fence Legs – Standard Height (JZSFS) in end (left or right) or in-line configuration
- Must be used in combination with Laminate Shelves – EZ Upper Frame Mounted (JZTBS)
- Available in 28" Standard Height (C) Beam Height only
- Available in leg depth 20" only
- Available in 57" or 66" Datum Height
- One side (O) configuration is reversible, it can be installed in both orientations

planning with ez upper A-frames

The following should be considered when planning with EZ Upper A-Frames.

With EZ Upper Rail for Lift & Drop Tile (JZSUR) Application

The EZ Upper A-Frames – Single-Sided (JZSUS) or Shared (JZSUD) must always be used in combination with a minimum of one EZ Upper Rail for Lift & Drop Tile

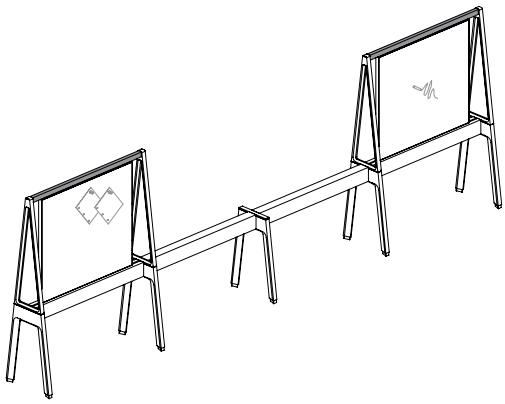

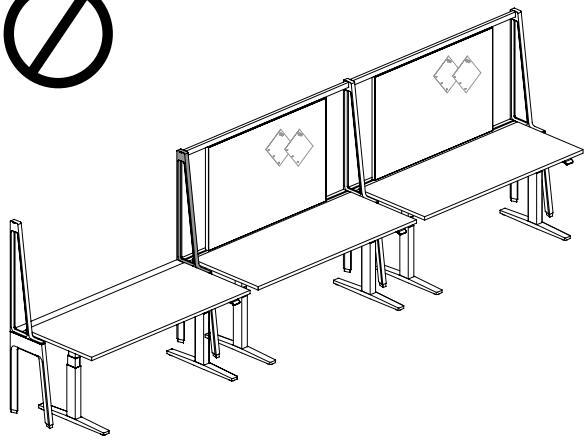

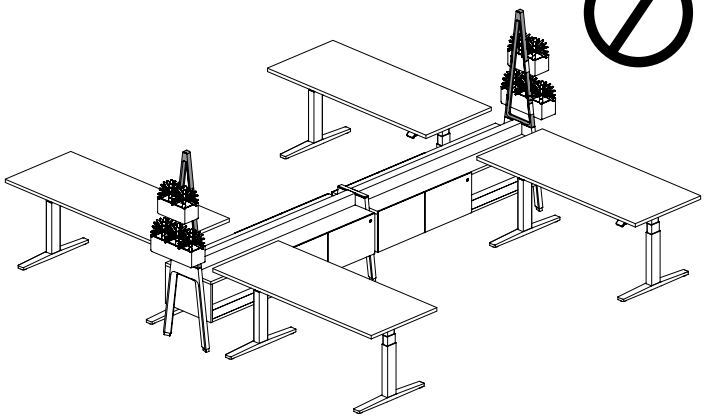

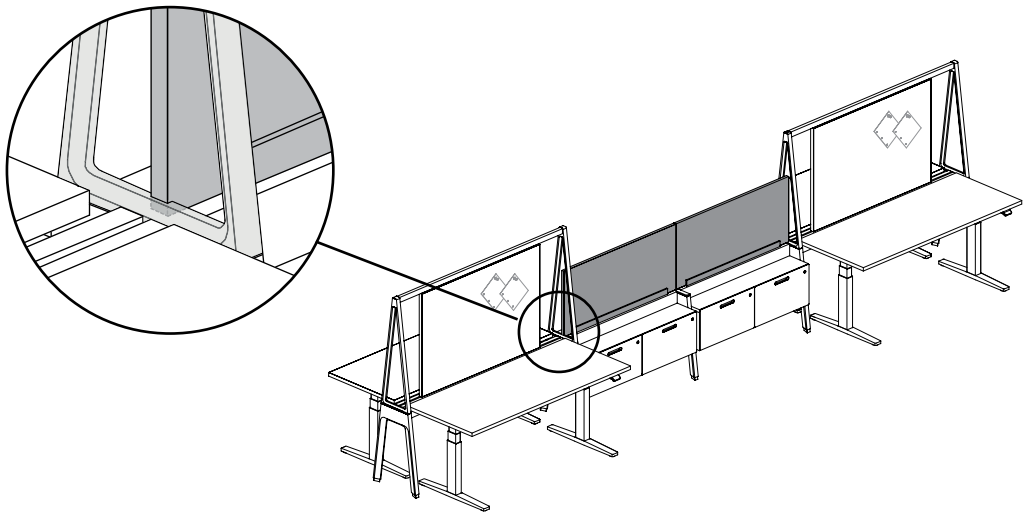

Not compatible with Add-On Screens – EZ Fence Beam-Mounted

The combination of the Upper A-Frames and Add-On Screens – EZ Fence Beam-Mounted is **not** allowed because there is conflict with the Upper A-Frame base

planning with ez upper A-frames (continued)

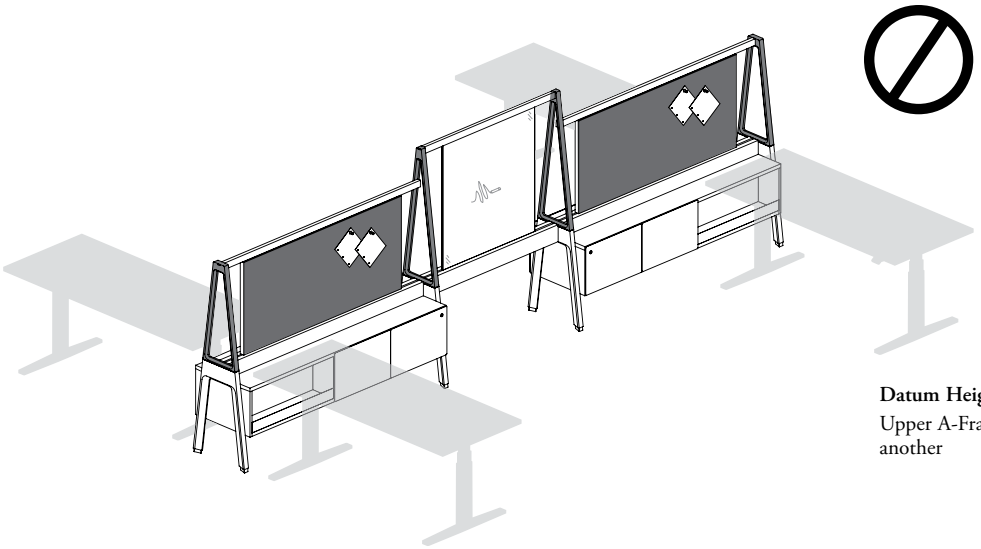

Datum Height Change
Upper A-Frame datum heights **cannot** vary from one to another

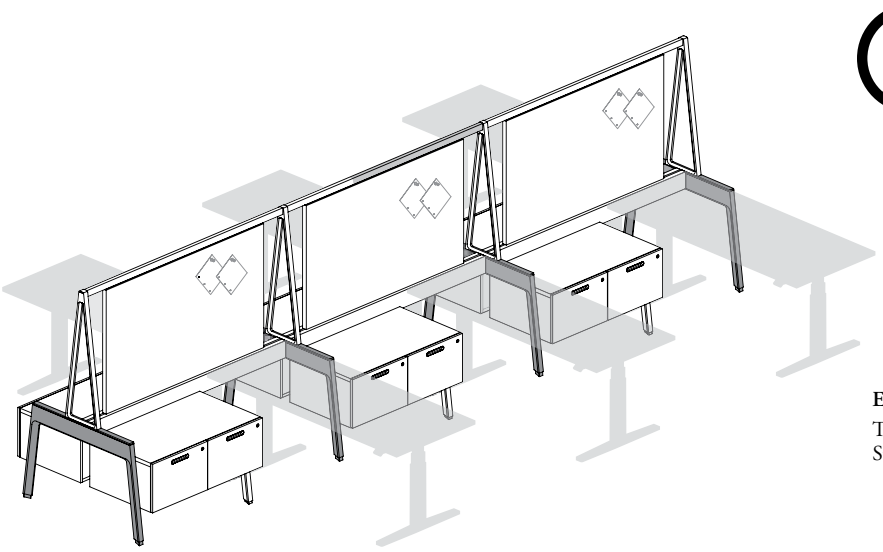

EZ Structural Leg – Double-Sided Application
The Upper A-Frame **cannot** be installed on the EZ Structural Leg – Double-Sided (JZSLD)

planning with ez upper A-frames (continued)

Mixing Upper A-Frame Styles

- The EZ Upper A-Frame – Shared (JZSUD) and EZ Upper A-Frame for Laminate Shelves (JZSULS) can be mixed on the same layout
- Datum Height change is **not** recommended, it will expose an unusable insert at the top of the 66" Upper A-Frame

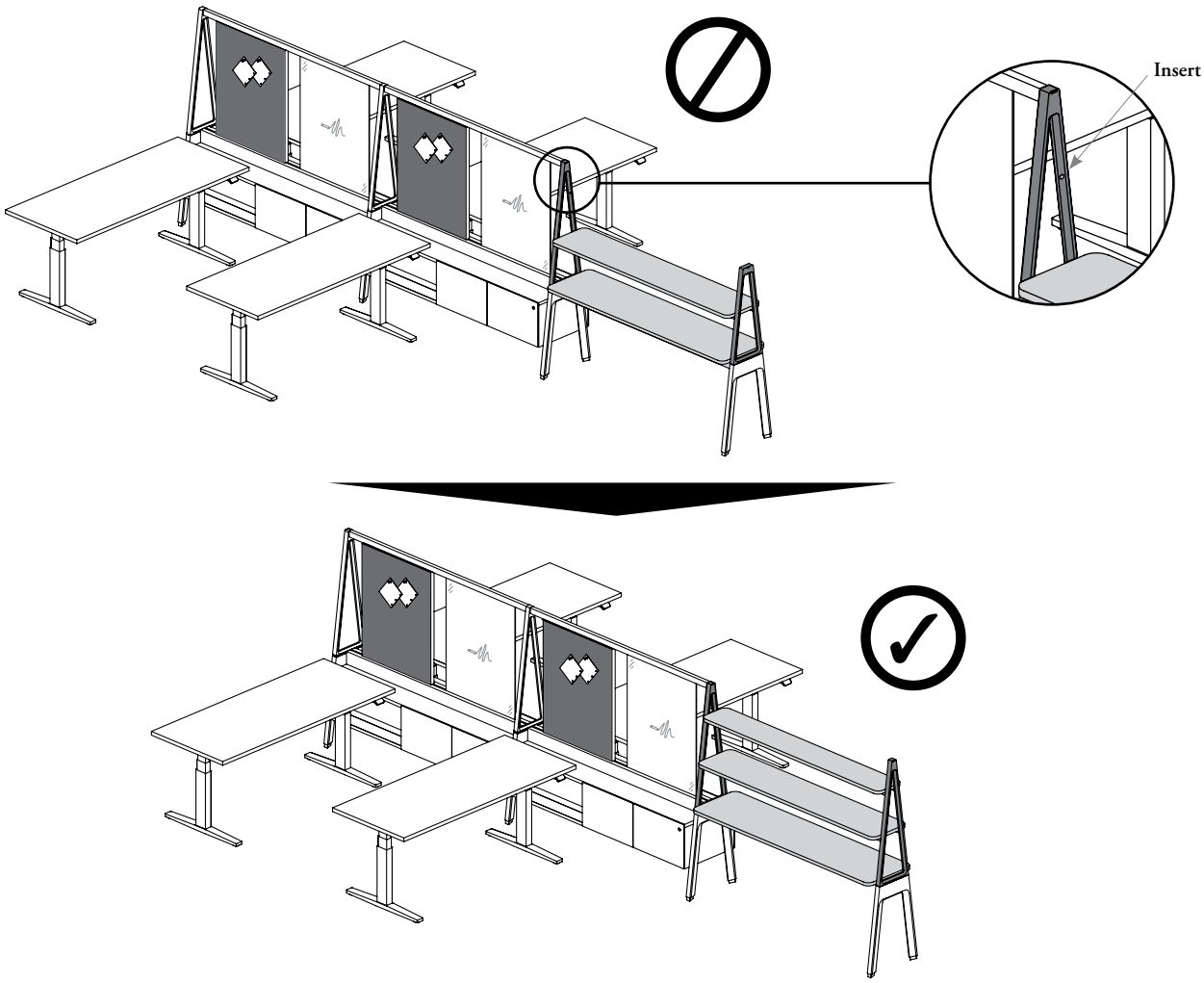

Collision

To avoid collision, there should be a minimum 1" gap between the lower shelf of a EZ Upper A-Frame for Laminate Shelves and a hiSpace or Navigate Height-Adjustable Table

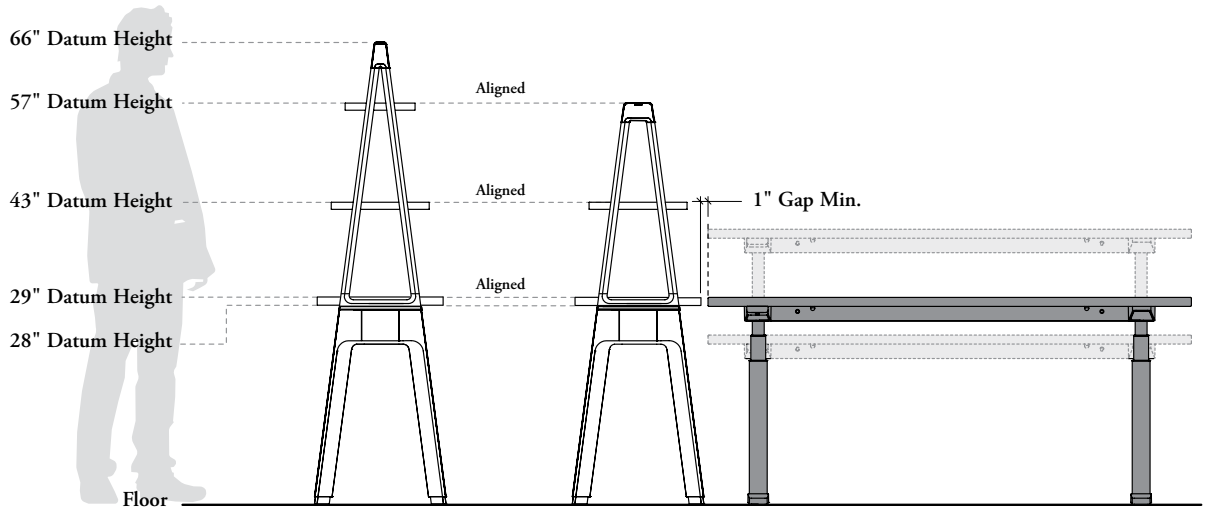

understanding run-off for ez fence

Expansion Cityline Run-Off for EZ Fence is the only Fixed-Height Worksurface available for EZ Fence. It is mounted perpendicular to the EZ Fence, in double-sided or single-sided applications.

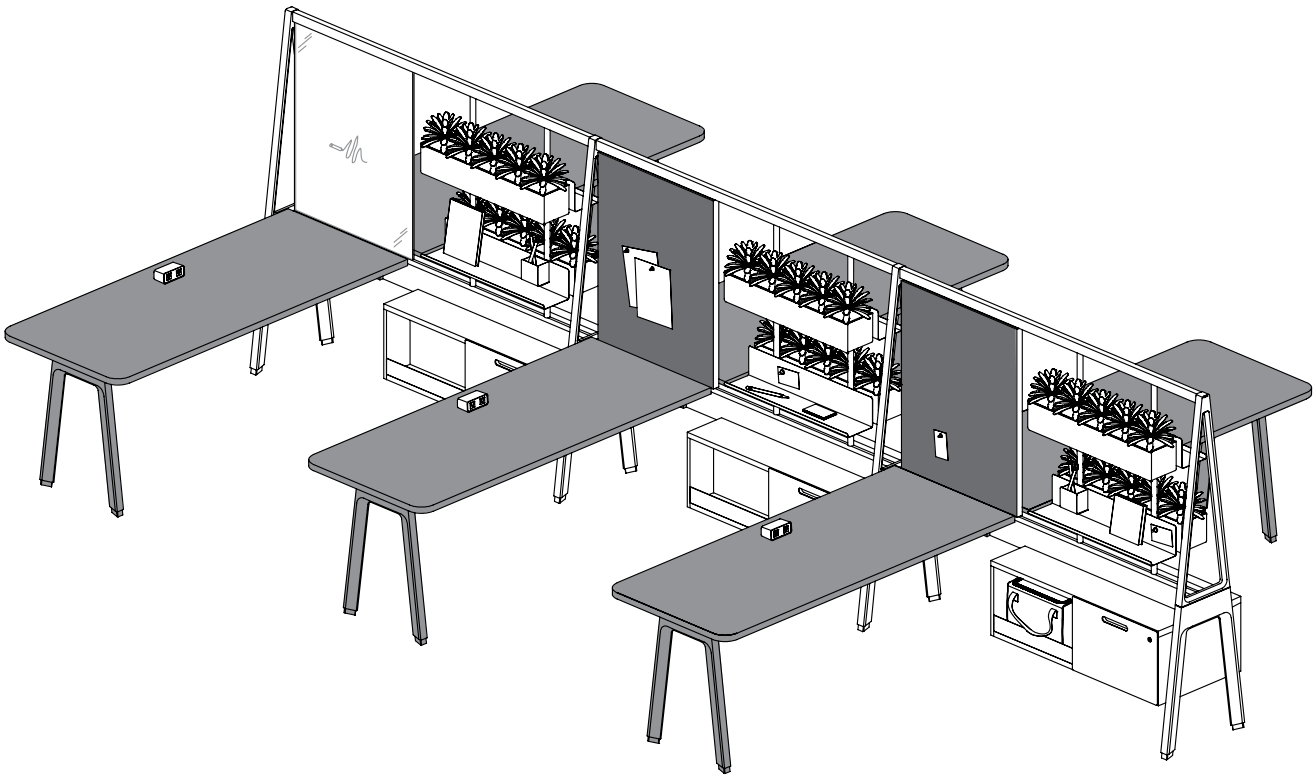

Finishes
Laminate Worksurface: Foundation Laminate
Edge Trim Styles: Flat Trim (1.5 mm) or Straight Trim (3 mm)
Edge Trim: Edge Trim Colors
Leg: Foundation, Mica and Accent
Beam Mounted Brackets & Leg Stabilizer Bracket: Will match the Leg Finish
Worksurface Grommet: Crisp Grey (25), Soft Gris (26), Platinum (60) Anthracite (68), Storm White (74) or Very White (83)

Worksurface widths are available in 6" increments

Rectangular Grommet and/or Square Grommet Ring can be specified

Leg Support is always included with the worksurface Run-Off for EZ Fence

understanding run-off for ez fence (continued)

ez fence run-off

1 Comes with a Rectangular Run-Off and when applicable, a Reinforcing Channel (from 72" to 84") 2

3 Diamond Cut-Out (Shown) for Rectangular Grommet can be specified to provide opening for routing electrical wiring and communication cables through the worksurface and/or Square Cut-Out for Power Qube (JNEPC) installation

4 One end of run-off is attached with Two Beam-Mounted Brackets to the Facing Down Brackets under the beam. Can only be installed on EZ Fence Beam (JZSBB), EZ Fence Beam for Corridor (JZSBS), Chicago EZ Fence Beam (JZSCB) or Chicago EZ Fence Beam for Corridor (JZSCS)

5 When applicable, a Leg Stabilizer Bracket is also included to attach the back edge of the run-off to the adjacent leg on the structure. It is included when Full-Beam Reduction (F) option is specified only

6 20" deep Freestanding Leg is included to support the other end of the worksurface

The Freestanding Leg comes with an angled profile 7 on both sides

Height is available in 29" floor to top of finished worksurface

8 Leg comes with a Leveler Cover and a black leveler for a more refined aesthetic

Provides a leveling range of 3" (-3/16", +2 13/16")

Comes with a Cable Tray 9 and Dual Wire Management Clips 10 mounted underneath worksurface to manage and conceals power and data wires coming from the worksurface level

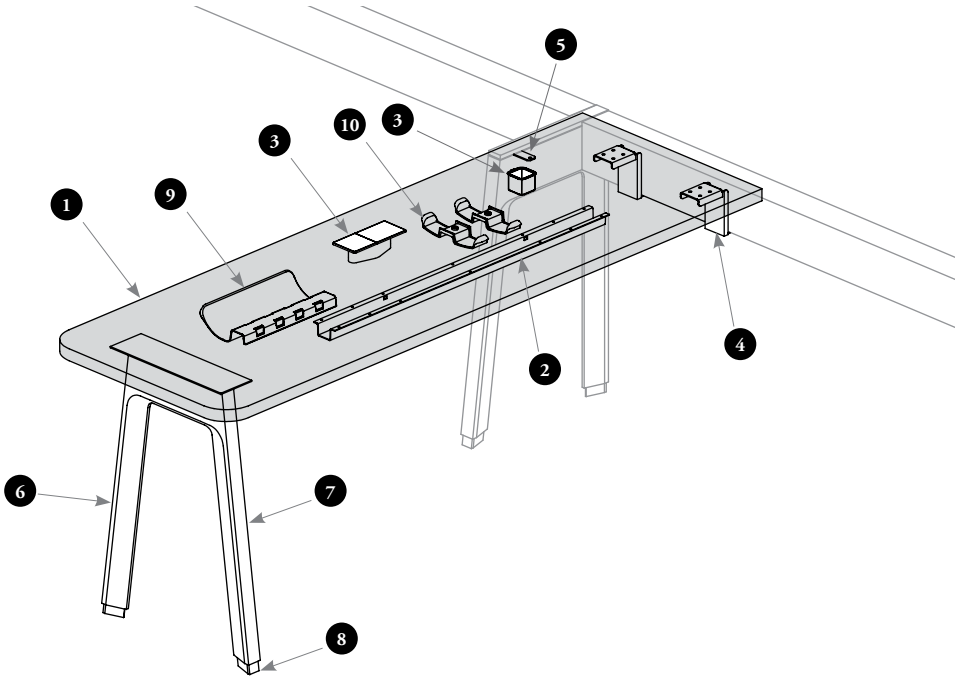

run-off for ez fence basics

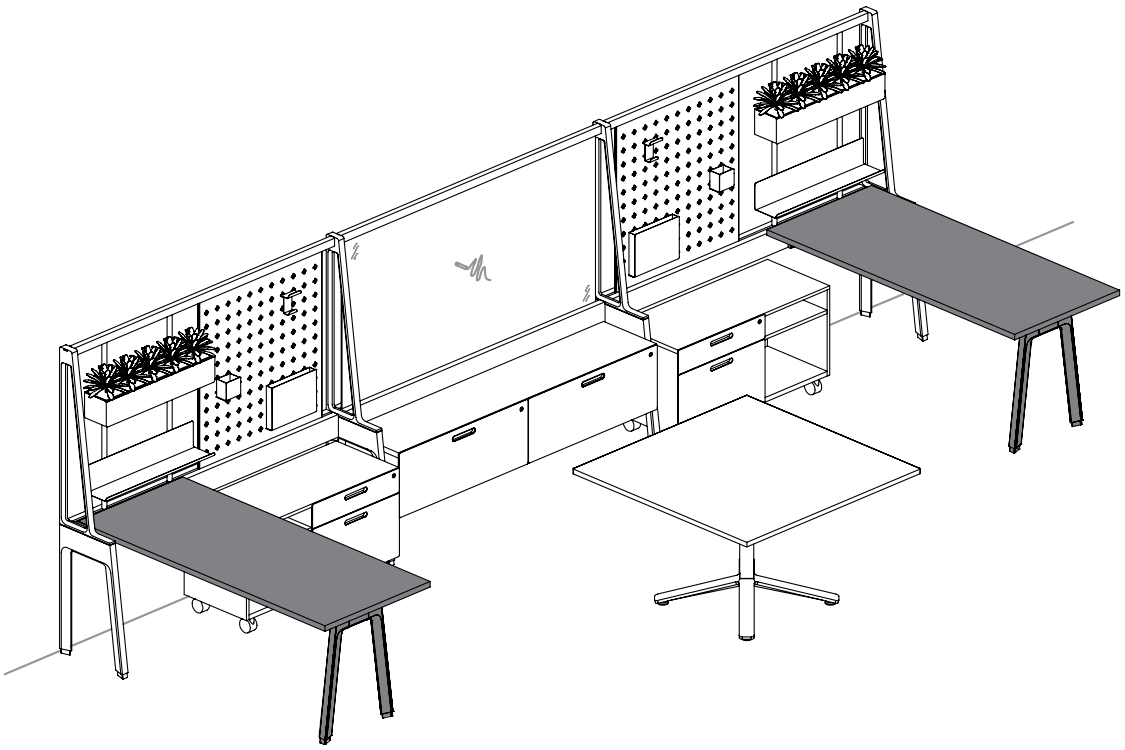

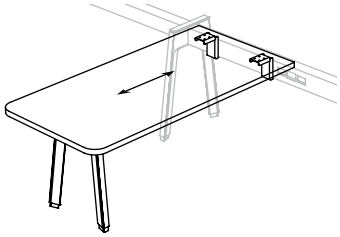

Run-Off for EZ Fence (JZWRF)

- Runs perpendicular to EZ Fence Beam (JZSBB), EZ Fence Beam for Corridor (JZSBS), Chicago EZ Fence Beam (JZSCB) or Chicago EZ Fence Beam for Corridor (JZSCS) and is supported by a Freestanding Leg
- Depth dimensions are actuals, width dimensions are nominals
- Depths are available in 23" or 29"
- Widths include 48" – 84" (6" increments)
- Height is available in 29" only
- Available with Curved or Standard corner detail. Curved Corners are available at the end opposite to beam only
- User edge trim style can be Straight Trim (3 mm) or Flat Trim
- Available in straight grain only
- Available with Diamond and/or Square Cut-Out
- A Cable Tray is included when a Rectangular Grommet and Square Cut-Out is specified

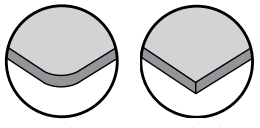

Curved (C) **Standard (S)** (1.5 mm)

planning with run-off for ez fence

The following should be considered when planning with Expansion Cityline Run-Offs for EZ Fence.

- Only compatible with 28" Standard Height EZ Fence Structure with or without EZ Upper A-Frame Structure

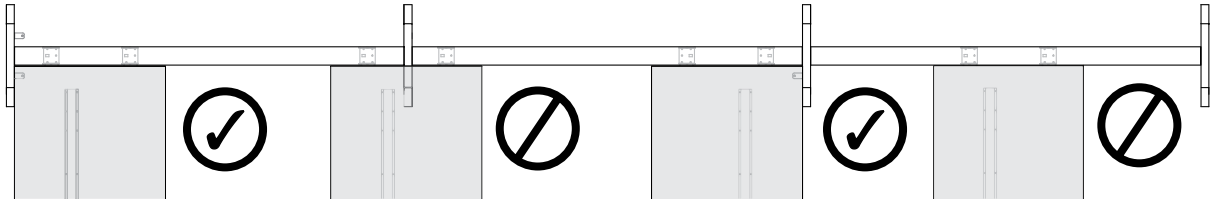

- Should always be specified next to an EZ Fence support, end or in-line configuration (EZ Fence Leg (JZSFS), EZ Structural Leg (JZSLS or JZSLD) or EZ Fence Post (JZSPS)). **Cannot** be mounted over a support or in the center of a beam
- Width Reduction must be specified according to the EZ Fence application on which it is mounted
- Two options are available:

full-beam reduction (F)

When perpendicular Run-Off for EZ Fence is mounted on a structure with Single-Sided EZ Structural Legs, the width of the run-off has to be reduced by the beam full depth, the full-beam reduction (F) must be specified

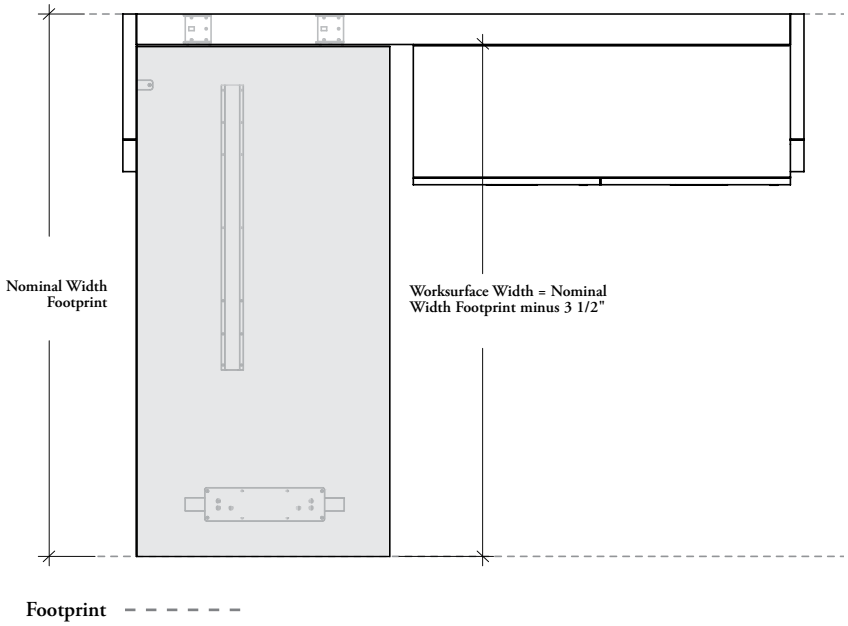

half-beam reduction (H)

When perpendicular Run-Off for EZ Fence is mounted on a structure with EZ Fence Legs or Double-Sided EZ Structural Legs, the width of the run-off has to be reduced by half of the beam depth, the half-beam reduction (H) must be specified

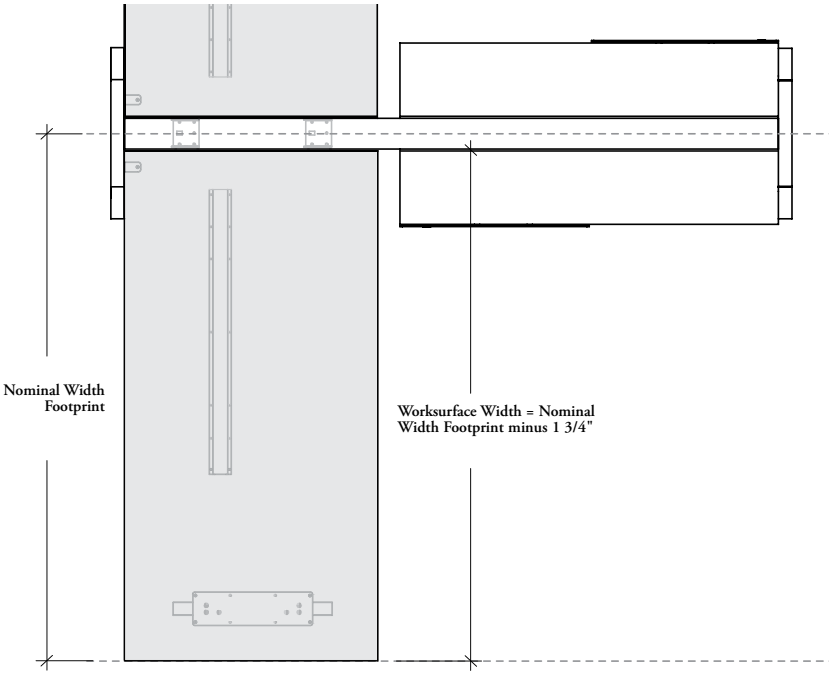

planning with run-off for ez fence (continued)

- Compatibles with:
  – Glass Back Edge Screens (JNSWGH)
  – Solid, Glass, Metal, Fabric, Felt or Infinity Back Elevated Screens (JNSESH, JNSMEH, JNSXEH, JNSEFH or JNSEEH)
  For more details on these screens, refer on Height-Adjustable Table Screens section

edge & elevated height-adjustable table screens – back edge applications

- The Freestanding Leg can be installed 2" recessed to optimised user legroom, or 5" recessed for a more casual look. Applications below can be achieved with both installation position
- Screen width must be specified according to the EZ Fence Support style

single-sided configuration

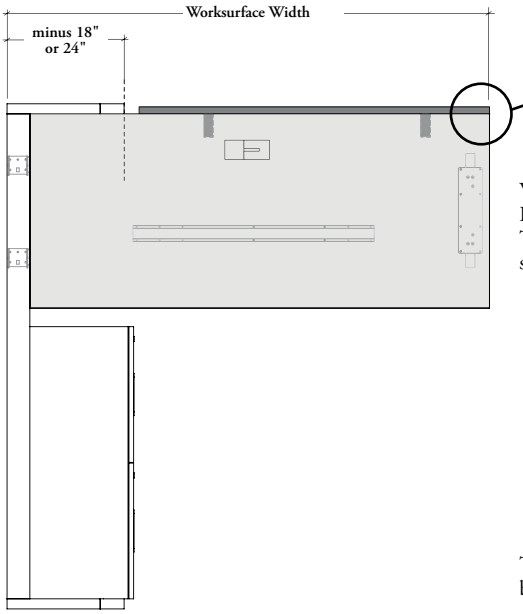

- The screen width has to be reduced by (at least) the EZ Structural Leg – Single-Sided (JZSLS) full depth (minus 18" or 24")
- Use the specification software for a better fit

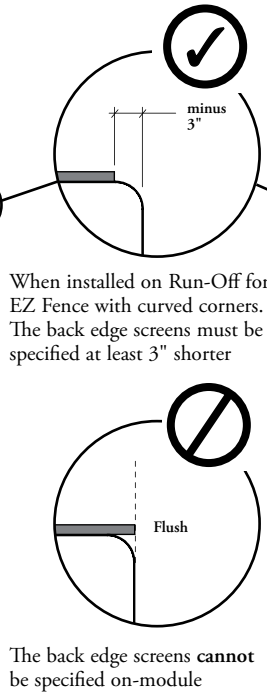

shared configuration

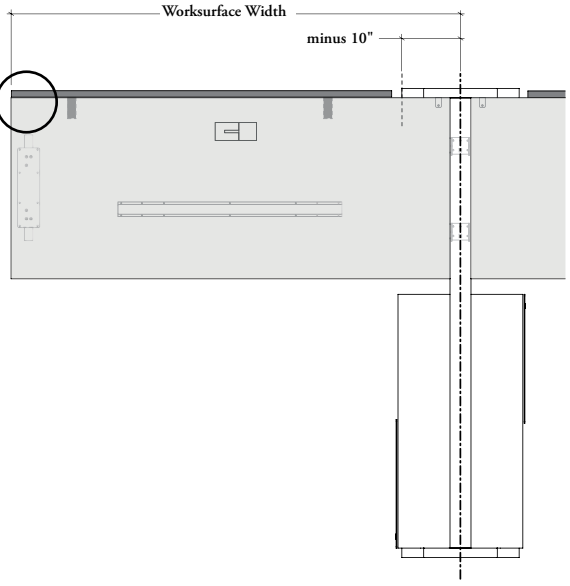

- The screen width has to be reduced by (at least) the EZ Structural Leg – Shared (JZSLD) half depth (minus 18" or 24") or EZ Fence Leg – Shared (JZSFS) half depth (minus 10") (Shown)
- Use the specification software for a better fit

planning with run-off for ez fence (continued)

Compatibles with:

– Solid, Metal, Fabric, Felt or Infinity Lateral Elevated Screens (JNSESH, JNSMLH, JNSXLH, JNSEFH or JNSEEH)

– Metal or Infinity Corner Elevated Screens – Height-Adjustable Table Mounted (JNSMCH or JNSXCH)

For more details on these screens, refer on Height-Adjustable Table Screens section

elevated & corner elevated height-adjustable table screens – lateral or corner edge applications

- The Freestanding Leg can be installed 2" recessed to optimised user legroom, or 5" recessed for a more casual look. Applications below can only be achieved with 5" recessed installation
- Screen width must be specified according to the EZ Fence Support style

single-sided configuration

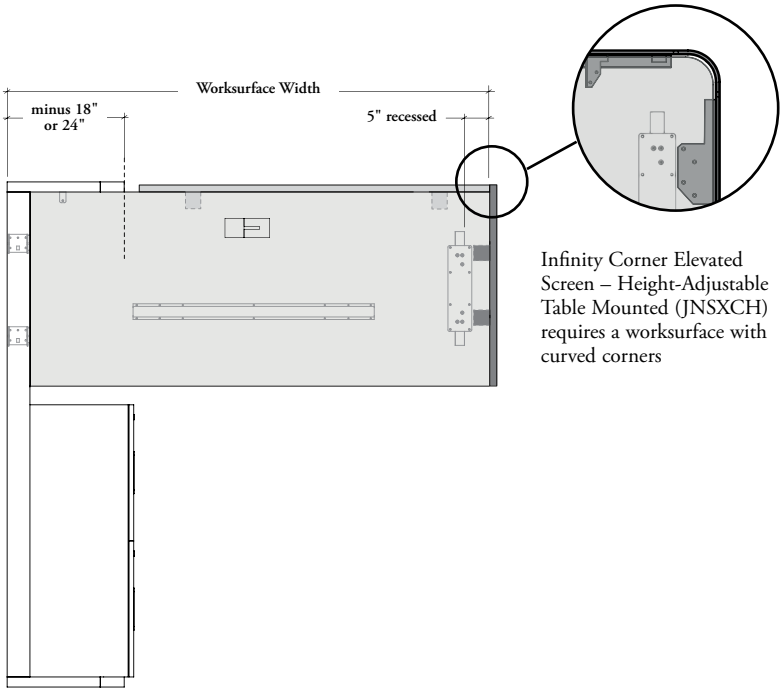

Infinity Corner Elevated Screen – Height-Adjustable Table Mounted (JNSXCH) requires a worksurface with curved corners

- For Corner Elevated Screens only, the back screen width has to be reduced by (at least)the EZ Structural Leg – Single-Sided (JZSLS) full depth (minus 18" or 24") (Shown) or reduced by the EZ Structural Leg – Shared (JZSLD) half depth (minus 18" or 24") or EZ Fence Leg – Shared (JZSFS) half depth (minus 10")
- Use the specification software for a better fit

shared configuration

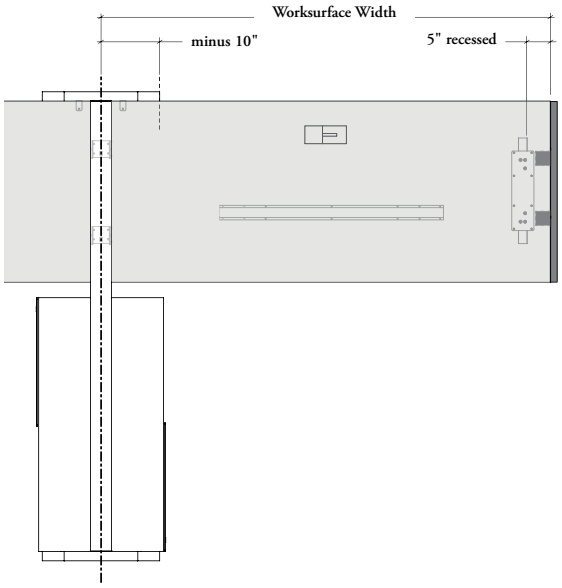

For Lateral Elevated Screens only, the depth screen can be specified on-module of 23" or 29" deep worksurface or off-module

- Use the specification software for a better fit

planning with run-off for ez fence (continued)

Also compatibles with:

– Felt End Screen – Height-Adjustable Table Mounted (JNSELEH). For more details on this screen, refer on Height-Adjustable Table Screens section

– Suspended Personal Storage (JNAUODS or JNAUEDS). For more details on these storage, refer on Accessories section

freestanding leg positions vs accessories

- A Suspended Personal Storage can be installed in combination with a Height-Adjustable Table Screen. When applicable, the Suspended Personal Storage must be installed inside of the leg
- The Suspended Storage must be installed flush with the front facing user edge of Run-Off for EZ Fence
- When used in combination with a Suspended Personal Storage or a Felt End Screen, two leg positions are compatible:

2" recessed

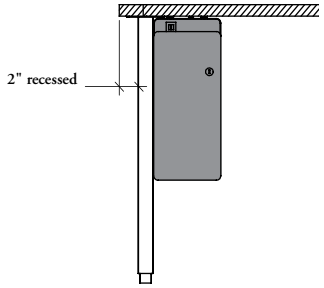

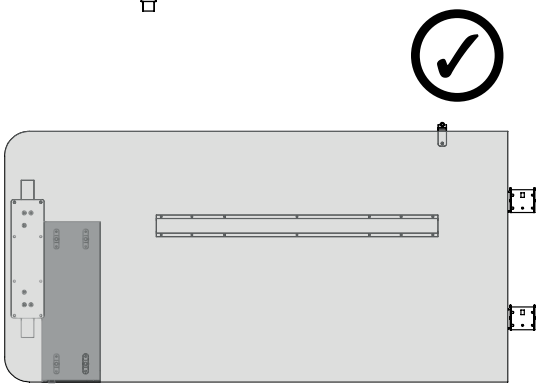

- A Suspended Personal Storage can be mounted underneath Run-Off for EZ Fence on the inner side of the 2" recessed Freestanding Leg

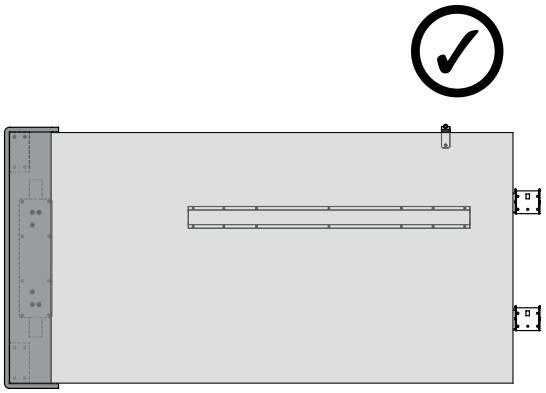

- The Felt End Screen is the only screen that can be mounted with both Freestanding Leg position

5" recessed

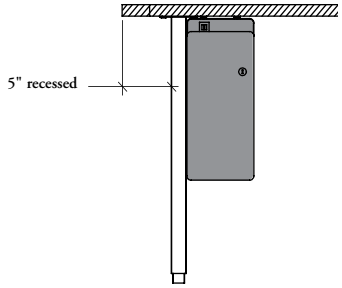

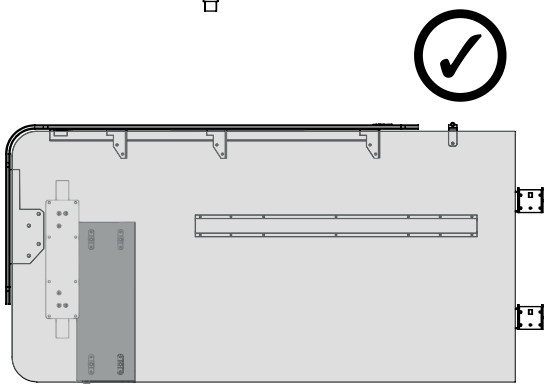

- When a Corner Elevated Screen or a Lateral Elevated Screen is installed on the Run-Off for EZ Fence, the Suspended Storage can be mounted on the inner side of the Freestanding Leg which must be installed 5" recessed

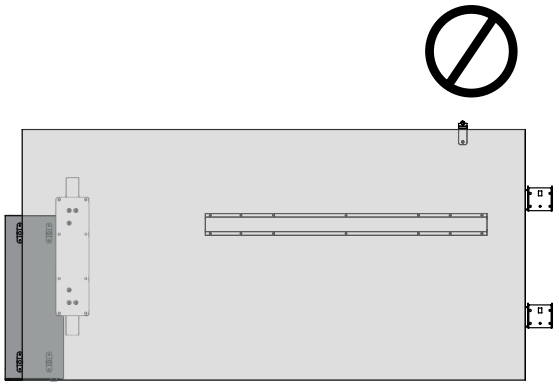

- The Suspended Personal Storage **cannot** be mounted on the outer side of the Freestanding Leg, even if it is installed 5" recessed, the storage is too wide

planning with grommets & cut-outs for ez fence run-off

The following should be considered when planning cut-out positions on Run-Off for EZ Fence.

- Cut-outs provide easy and aesthetically pleasing pass-through wire management beneath a worksurface
- Are available with factory-made cut-outs
- Two cut-out options are available:

diamond shaped cut-out

- Provides an opening for routing electrical wiring and communication cables through the worksurface and allows the installation of MAST and Swerv Monitor Arms
- Diamond cut-out can be closed with a **Rectangular Grommet (JNEGR)** that can be specified separately. For more details, refer to Lighting, Electrics or Communications section

square shaped cut-out

- Provides an opening for routing electrical wiring and communication cable through the worksurface
- Allows the installation of Power Qubes that provides direct access to power/data and or USB charger ports above the worksurface
- **Dual or Quad Power Qube (JNEPC)** must be specified to complete the installation. For details, refer to the Lighting, Electrics & Communications section
- Comes with grommet ring and comes in Coordinate Soft Gris only
- Square cut-out can be closed with a **Square Grommet (JNEGQ)** that can be specified separately. For more details, refer to Lighting, Electrics or Communications section

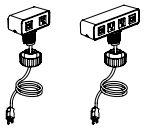

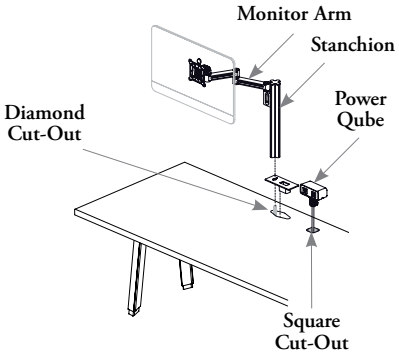

MAST and Swerv Monitor Arms

- Are designed for various levels of technology support (see Complements products)
- A MAST Monitor Arm for Expansion Grommet (mounting option 5) or a Swerv Monitor Arm for Diamond Grommet (mounting option 4) can be placed in the Diamond Cut-Out on worksurfaces
- A maximum of two monitors can be mounted on a Run-Off for EZ Fence
- MAST Stanchions are limited to single height only
- When a Monitor Arm is used in combination with a back screen, there may be an interference. Refer to specification software to validate the compatibility

- **NOTE:** Swerv IC (YMSZ) (Integrated Cerebro) can be in interference with other furniture depending of the workstation planning. Contact Teknion's Technical Support to validate the workstation planning

planning with grommets & cut-outs for ez fence run-off (continued)

cut-out locations

- Cut-outs will always be 5 3/8" from the back edge of the worksurface
- Offset position on Left or Right Run-Off is always towards the beam

Run-Off for EZ Fence (JZWRF)

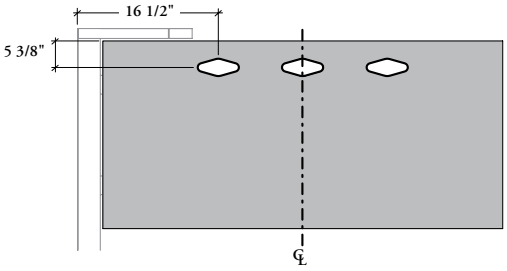

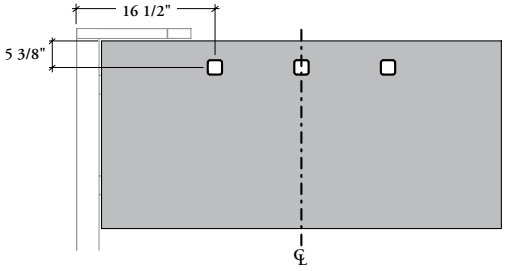

Six cut-out styles are available:

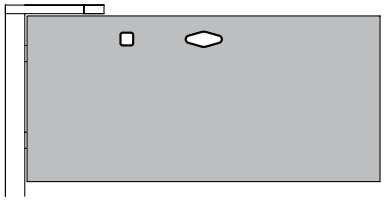

Diamond & Square Cut-Outs (CC)

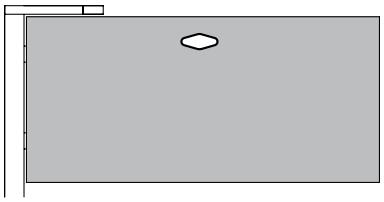

Diamond Cut-Out – Center (DC)

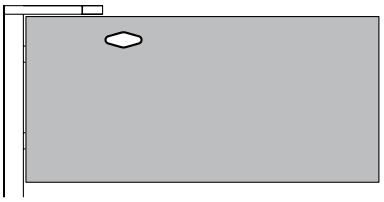

Diamond Cut-Out – Offset (DO)

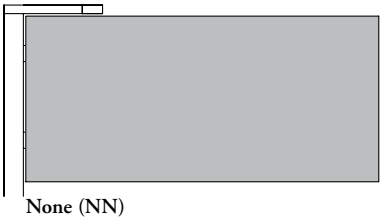

None (NN)

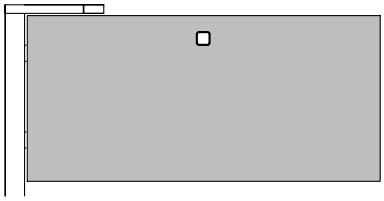

Square Cut-Out – Center (SC)

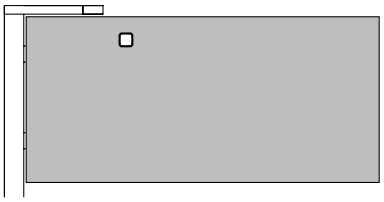

Square Cut-Out – Offset (SO)

grain/pattern direction & edge trim styles – ez fence run-off

Attention to grain/pattern direction is important when planning worksurfaces.

- Grain direction is an important factor when planning workstation, if a different grain direction is required, please contact Teknion Customer Service Representative
- The pattern direction is **not** centered and grain direction can appear in different orientation from side-to-side worksurface
- Shading indicates specified edges, all other edges are 1.5 mm Flat Trim

worksurface grain/pattern direction and user edges

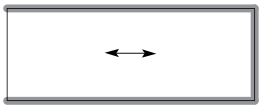

JZWRF

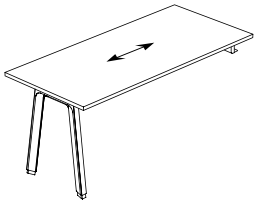

Laminate = ⟷

edges trim styles

		Foundation Laminate Surface
Flat (8) All Edges (**Not** available with worksurface with curved corners)		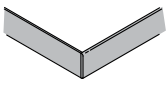
Straight (6) (All edges)		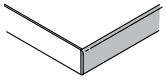

ez fence leg cover – top basics

- Finishes the top of angled legs (A) in exposed beam application
- The EZ Structural Leg Cover – Top is offered as an option on all leg styles and are also offered separately to reconfigure EZ Fence Supports that would be reconfigured without EZ Upper A-Frame
- Four leg configurations are available:

ez structural leg – double-sided configuration (D)

- Come always in two pieces. Each piece hides completely. Comes in two parts, covering entirely the EZ Structural Leg top. Compatible with In-Line and End configurations
- Available for leg width 36" (2 parts) or 48" (2 parts)
- Applicable with EZ Structural Leg – Double-Sided (JZSDS) only

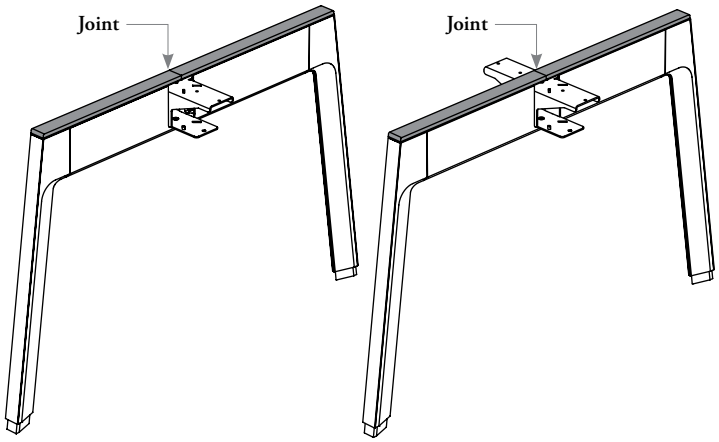

End Configuration **In-Line Configuration**

ez fence leg configuration (F)

- Comes in one part, covering entirely the EZ Fence Leg top. Compatible with In-Line and End configurations
- Available in width 20" only
- Available with EZ Fence Leg – Standard Height (JZSFS)

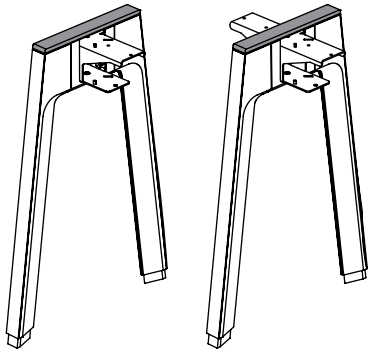

End Configuration **In-Line Configuration**

ez fence leg – low height configuration (L)

- Comes in one part, covering entirely the EZ Fence Leg top. Compatible with In-Line and End configurations
- Available in width 17" only
- Available with EZ Fence Leg – Low Height (JZSFL)

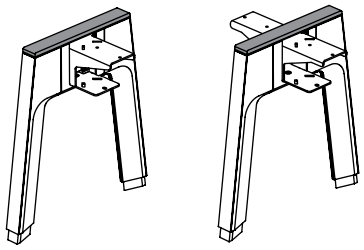

End Configuration **In-Line Configuration**

ez structural leg single-sided configuration (S)

- Comes in one part, covering entirely the EZ Structural Leg top. Compatible with In-Line and End configurations
- Available in widths 18" or 24"
- Applicable with EZ Structural Leg – Single-Sided (JZSLS)

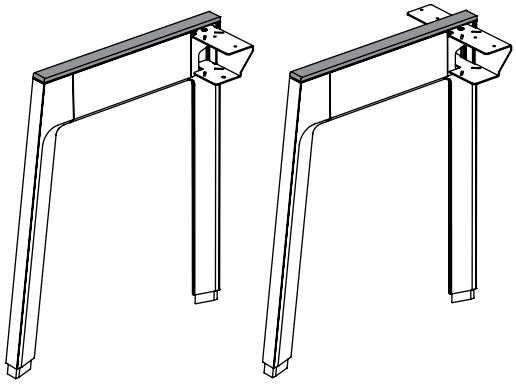

End Configuration **In-Line Configuration**

preconfigured ez fence structure

preconfigured ez fence structure

UNDERSTANDING PRECONFIGURED EZ FENCE STRUCTURE . . 100

PRECONFIGURED EZ FENCE STRUCTURE 102

understanding preconfigured ez fence structure

Preconfigured EZ Fence Structure use the same compoments than those found in the EZ Fence Structure section, prices are also the same. These preconfigured products are put together for specification efficiency purposes. Same guidelines applied, refer to EZ Fence Structure section

How to specify Preconfigured EZ Fence Structure:

– Always starts with a End-Left (L) configuration
– Always ends with a End-Right (R) configuration
– For station of two beams a End-Left (L) and End-Right (R) can be connected together
– For station of more than two beams, every middle section must be In-Line (I) configuration
– Power & Data Opening options are limited in preconfigured products, for more options, specify components separately

For EZ Fence Structure with EZ Add-On Screens, Upper A-Frame for Shelves or EZ Fence Structure without any screen or Upper A-Frame, preconfigured structures **cannot** be used. Specify components separately

ez fence leg for lift & drop tile – shared (JZPD) anatomy

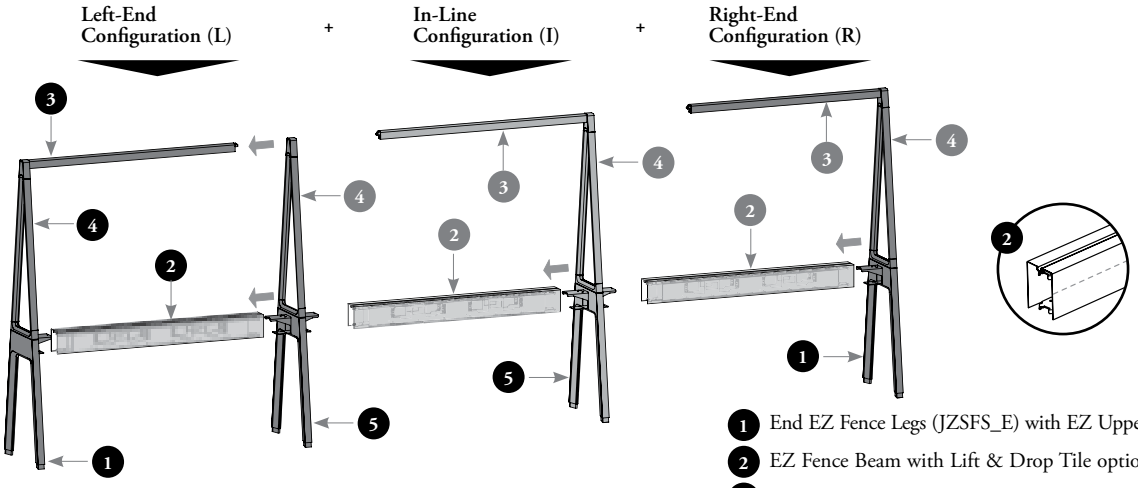

1. End EZ Fence Legs (JZSFS_E) with EZ Upper A-Frame Ready option (U)
2. EZ Fence Beam with Lift & Drop Tile option (JZSBBT)
3. EZ Upper Rail for Lift & Drop Tile (JZSUR)
4. EZ Upper A-Frame – Shared – 28" Standard Height (JZSUDC)
5. In-Line EZ Fence Leg (JZSFS_I) with EZ Upper A-Frame Ready option (U)

ez fence leg for lift & drop tile – low shared (JZPLD) anatomy

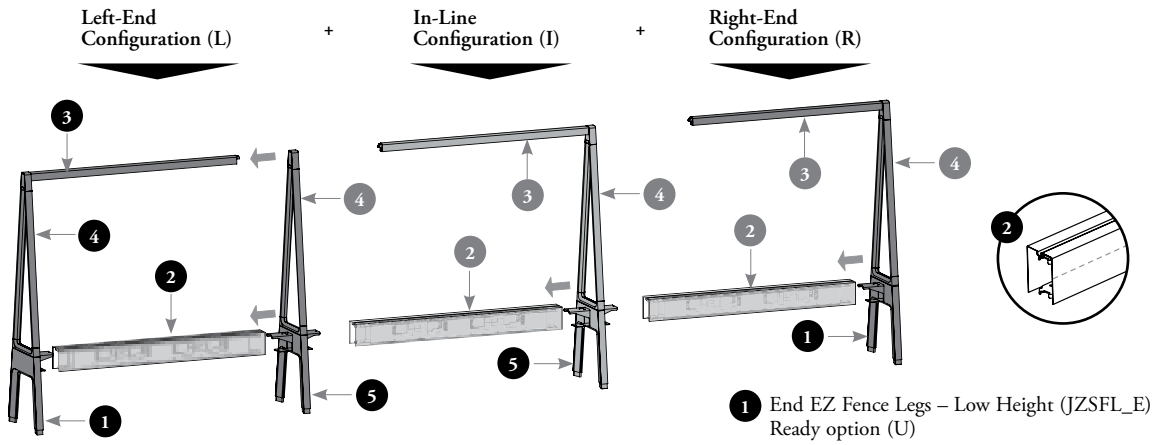

1. End EZ Fence Legs – Low Height (JZSFL_E) with EZ Upper A-Frame Ready option (U)
2. EZ Fence Beam with Lift & Drop Tile option (JZSBBT)
3. EZ Upper Rail for Lift & Drop Tile (JZSUR)
4. EZ Upper A-Frame – Shared – 18" Low Height (JZSUDL)
5. In-Line EZ Fence Leg – Low Height (JZSFL_I) with EZ Upper A-Frame Ready option (U)

understanding preconfigured ez fence structure (continued)

ez fence leg for lift & drop tile – single-sided (JZPS) anatomy

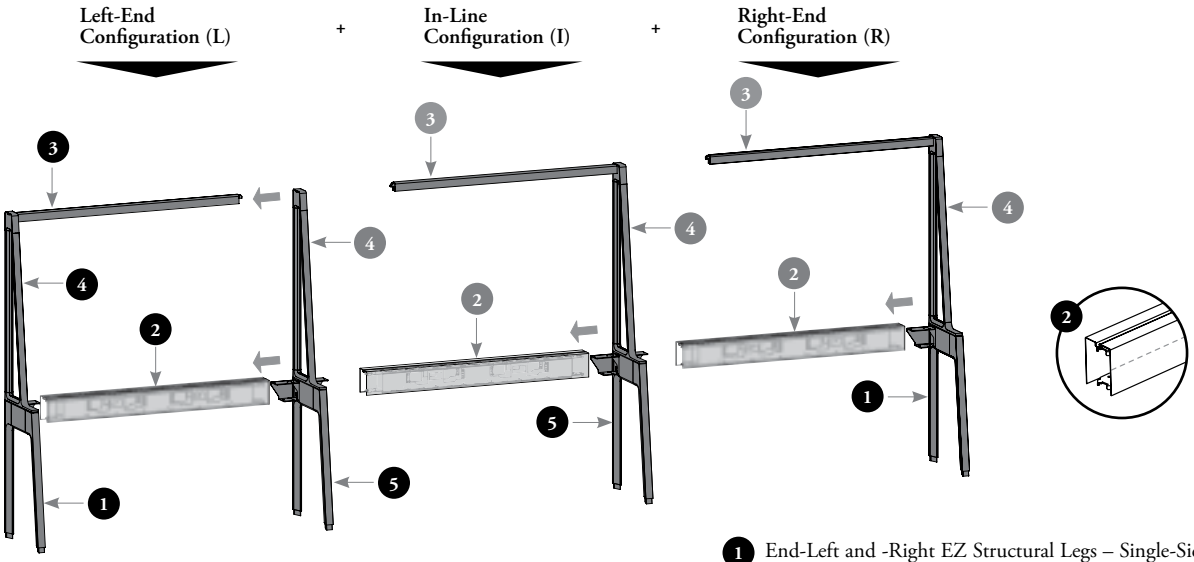

1. End-Left and -Right EZ Structural Legs – Single-Sided (JZSLS_L and R) with EZ Upper A-Frame Ready option (U)
2. EZ Fence Beam with Lift & Drop Tile option (JZSBBT)
3. EZ Upper Rail for Lift & Drop Tile (JZSUR)
4. EZ Upper A-Frame – Single-Sided – 28" Standard Height (JZSUSC)
5. In-Line EZ Structural Leg – Single-Sided (JZSLS_I) with EZ Upper A-Frame Ready option (U)

ez fence leg for lift & drop tile – single-sided for corridor (JZPB) anatomy

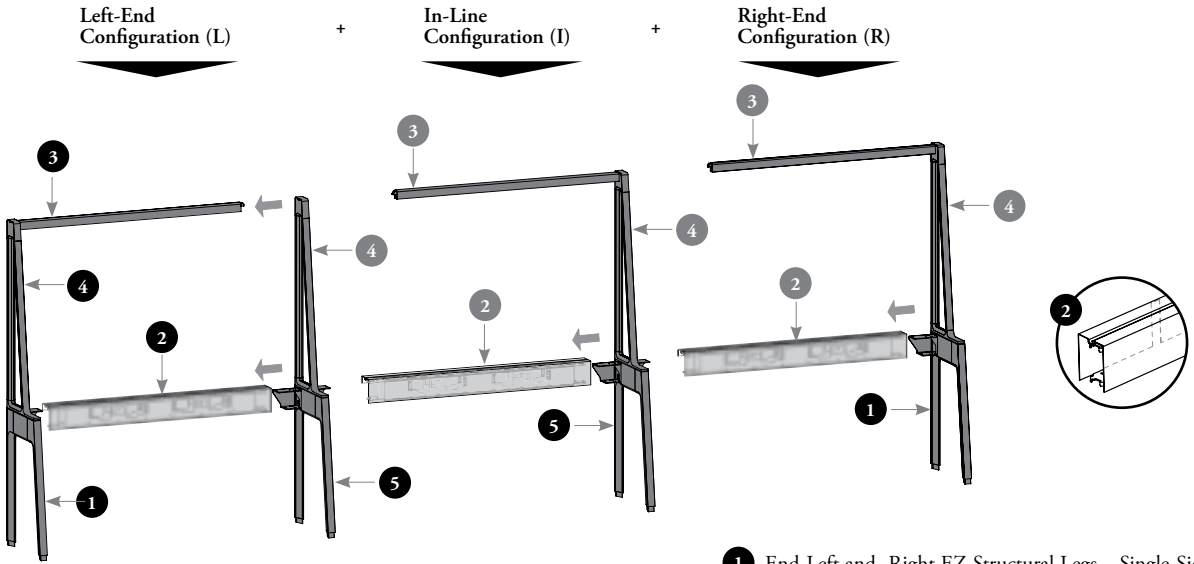

1. End-Left and -Right EZ Structural Legs – Single-Sided (JZSLS_L and R) with EZ Upper A-Frame Ready option (U)
2. EZ Fence Beam for Corridor with Lift & Drop Tile option (JZSBST)
3. EZ Upper Rail for Lift & Drop Tile (JZSUR)
4. EZ Upper A-Frame – Single-Sided – 28" Standard Height (JZSUSC)
5. In-Line EZ Structural Leg – Single-Sided (JZSLS_I) with EZ Upper A-Frame Ready option (U)

preconfigured ez fence structure basics

The versatility of the Preconfigured EZ Fence Structure allows to use in a variety of applications: Single-Sided or Shared, Low or Standard Height

- Single-Sided configuration must be stabilized and refer to EZ Fence Structure section
- The Left-End, Right-End or In-Line Position, Single-Sided and Shared Preconfigured EZ Fence Structure are semi-supported and must always be connected with each-other for stability
- Provides a leveling range of 3" (-3/16", +2 13/16")
- Four styles are available:

ez fence leg for lift & drop tile – shared (JZPD)

- For components included, see previous page
- Comes with 28" Standard Height Beam
- Available in widths 48" – 84" (6" increments)
- Available in 57" or 66" Datum Height

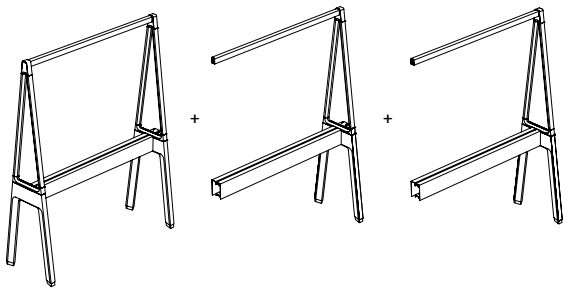

Left-End Configuration (L) **In-Line Configuration (I)** **Right-End Configuration (R)**

ez fence leg for lift & drop tile – single-sided (JZPS)

- For components included, see previous page
- Comes with 28" Standard Height Beam
- Available in widths 48" – 84" (6" increments)
- Available in 57" or 66" Datum Height

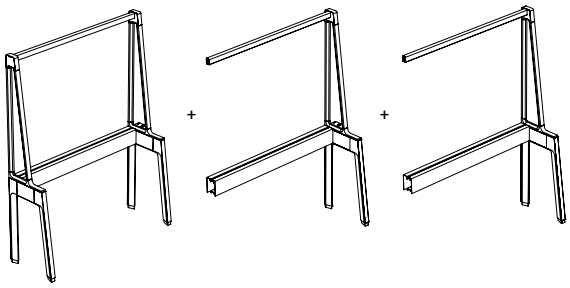

Left-End Configuration (L) **In-Line Configuration (I)** **Right-End Configuration (R)**

ez fence leg for lift & drop tile and for corridor – single-sided (JZPB)

- For components included, see previous page
- Comes with 28" Standard Height Beam
- Available in widths 48" – 84" (6" increments)
- Available in 57" or 66" Datum Height

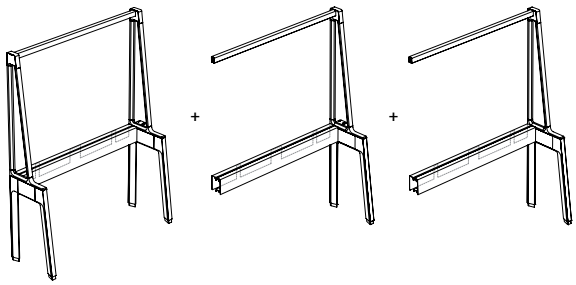

Left-End Configuration (L) **In-Line Configuration (I)** **Right-End Configuration (R)**

ez fence leg for lift & drop tile – low shared (JZPLD)

- For components included, see previous page
- Comes with 18" Low Height Beam
- Available in widths 48" – 84" (6" increments)
- Available in 56" Datum Height only

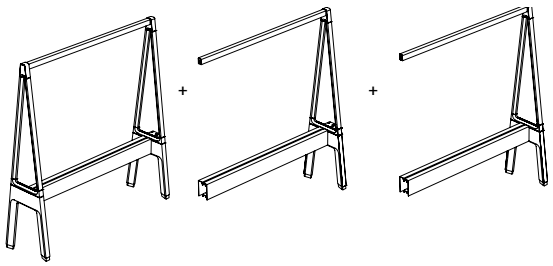

Left-End Configuration (L) **In-Line Configuration (I)** **Right-End Configuration (R)**

Finishes
Frame (includes legs, beam, upper a-frame & upper rail: Foundation, Mica and Accent

ez lift & drop tiles and shelves

ez lift & drop tiles & shelves

UNDERSTANDING LIFT & DROP TILES AND VERTICAL POLES . 108

UNDERSTANDING LIFT & DROP TILES 109

LIFT & DROP TILE BASICS 111

PLANNING WITH LIFT & DROP TILES 114

LIFT & DROP MEDIA TILE – SOLID BASICS 116

PLANNING WITH LIFT & DROP MEDIA TILE – SOLID 117

PLANNING WITH MONITOR & CAMERA SUPPORT 121

UNDERSTANDING LIFT & DROP VERTICAL POLES 124

LIFT & DROP VERTICAL POLES BASICS 125

UNDERSTANDING ACCCESSORIES – LIFT & DROP VERTICAL POLES MOUNTED 126

ACCCESSORIES – LIFT & DROP VERTICAL POLES MOUNTED BASICS 128

PLANNING WITH ACCCESSORIES – LIFT & DROP VERTICAL POLES MOUNTED 130

ez lift & drop tiles & shelves (continued)

UNDERSTANDING WITH PLANTER BOX KIT & LAMINATE SHELVES – EZ UPPER A-FRAME MOUNTED 134

PLANTER BOX KIT – EZ UPPER A-FRAME MOUNTED BASICS. . . 135

PLANNING WITH PLANTER BOX KIT – EZ UPPER A-FRAME MOUNTED. 137

LAMINATE SHELVES – EZ UPPER A-FRAME MOUNTED BASICS. 138

PLANNING WITH LAMINATE SHELVES – EZ UPPER A-FRAME MOUNTED. 140

understanding lift & drop tiles and vertical poles

Expansion Cityline offers a variety of products for space division. Lift & Drop Tiles provides user visual and territorial privacy, differents functionalities and a flexibility in planning.

The mix of materials and colors on the same beam is allowed

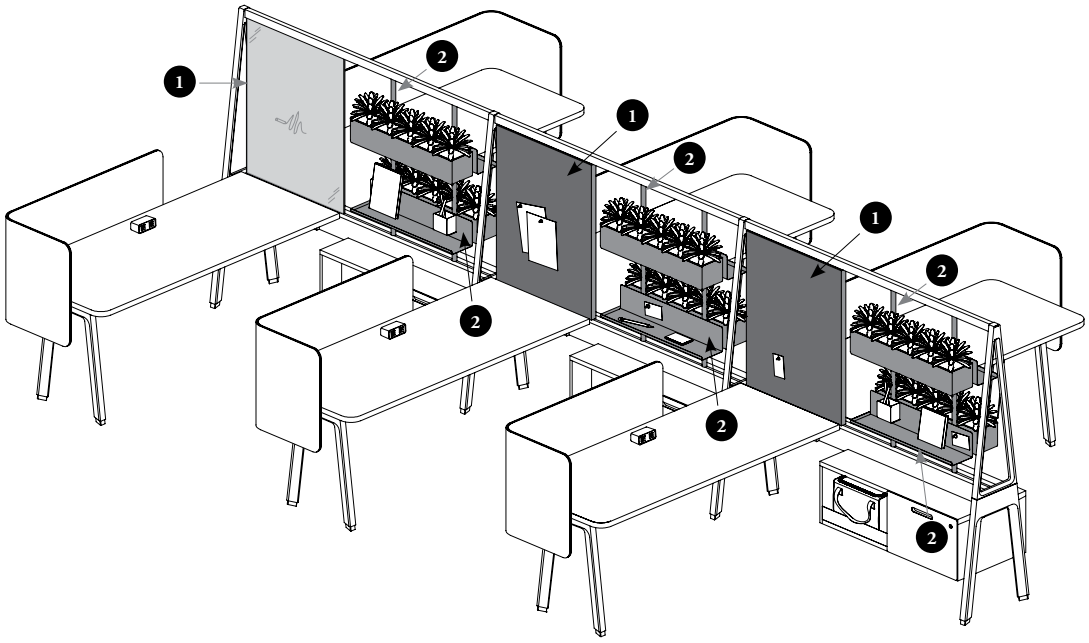

Finishes
Solid or Solid Vertical Grain Screen Finish: Source Laminate
Fabric Screen Finish: Teknion Standard Panel Fabrics.
Felt Screen Finish: Loft colors. Two-sided finished products have same finish on both sides
Cork Screen Finishes: Natural Cork
Outer and Inset Metal Accessory Screen Finishes: Foundation, Mica and Accent
Metal Markerboard Screen Finish: Whiteboard (WZ)
Glass Screen Finishes: Frost (FT), Satin (FB) or Frost – Low Iron (LB)*
* Low Iron Glass Finishes reduce the greenish render of standard glass. They should be specified anytime this product is installed on the same workstation than a Glass Screen
Writable Magnetic **Glass Finish:** Back-Painted
Hardware Finishes: Foundation, Mica Accent and Coordinate Colors (if applicable)**
****Coordinate Colors** (available with Solid Screens) are pre-defined colors to be used to match wood print: Royal Cherry (M8), Ivory Birch (NB), Provincial Oak (NC), Coastal Elm (ND), Espresso Reflect (Q4), Stainless (Q6), Walnut Cathedralgrain (Q7), Mercurial Walnut (Q9), Java Walnut (R7), Urban Walnut (R8), Choice Maple (R9), Estate Cherry (V1), Campus Oak (VD), Flax Reflect (VL), Pecan Reflect (VV), Cocoa Brown Reflect (W8) and Sycamore Reflect (W9)

1 lift & drop tiles

Create full privacy and physical separation in Single-Sided or Shared EZ Fence application. Easy to install, they provide different functionalities to the user above a EZ Fence Beam

2 lift & drop vertical poles & accessories

Is a vertical system that provides casual privacy and space division in Single-Sided or Shared EZ Fence application. They allow the mounting, at different position, of the Accessories for Lift & Drop Vertical Poles Mounted

understanding lift & drop tiles

lift and drop tiles anatomy

Two tiles styles are available:
- Thick Tiles
- Thin Tiles

thick tiles

Four types of tiles are available:

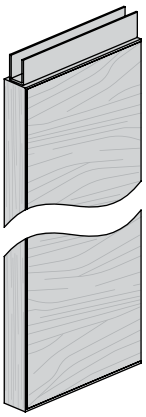

Solid, Solid Vertical Grain and Solid Media Tiles
Available in 11/16" thick

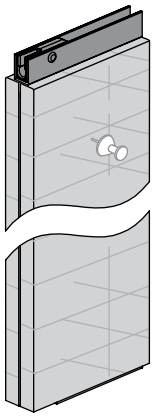

Fabric Tile
Available in 7/8" thick

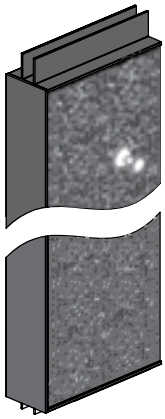

Felt Tile
Available in 1 5/16" thick

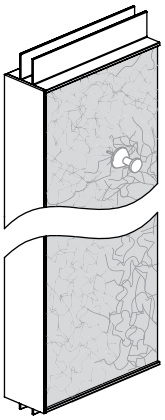

Cork Tile
Available in 1 5/16" thick

SIDE VIEW

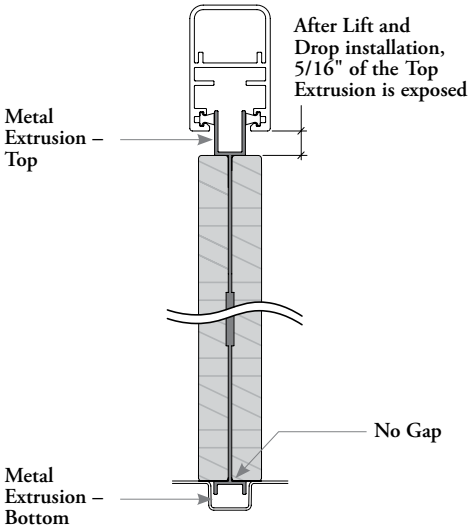

thin tiles

Four types of tiles are also available:

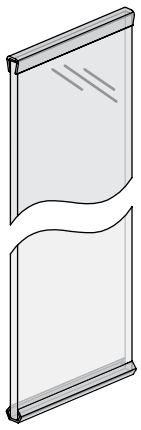

Frosted Glass Tile
Available in 1/4" (6 mm) thick

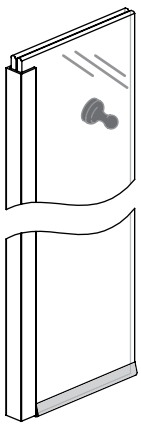

Writable Magnetic Glass Tile
Available in 1/2" thick

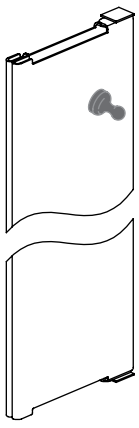

Metal Markerboard Tile
Available in 1/2" thick

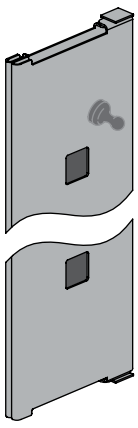

Metal Acessory Tile
Available in 1/2" thick

SIDE VIEW

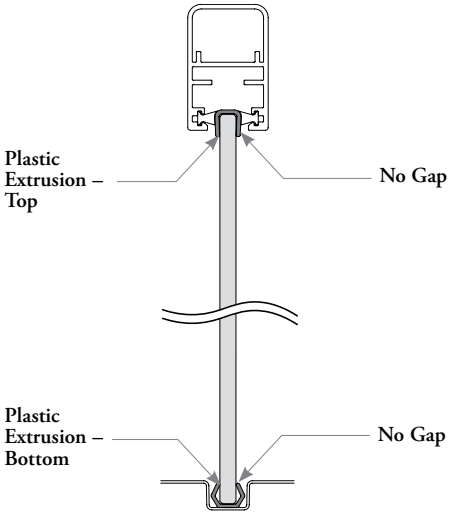

understanding lift & drop tiles (continued)

- All tiles, including the media tile, are installed by a simple lift and drop motion and secured by a anti-dislogement device at both ends
- Tile installation and reconfiguration must be done by a Teknion Certified Installer

lift and drop tiles installation

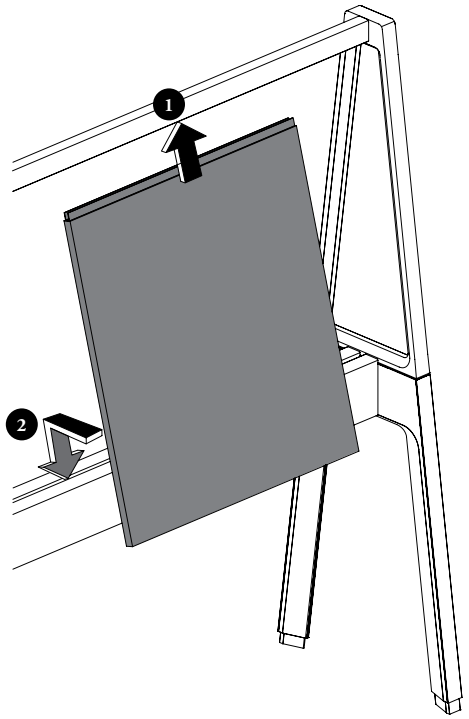

Lift and Drop Tile

1. Lift the tile inside the groove of the EZ Upper Rail for Lift & Drop Tile mounted between two EZ Upper A-Frames – Single-Sided or Shared
2. Drop the tile inside the groove of the EZ Fence Beam or EZ Fence Beam for Corridor with Lift & Drop (T) option

SIDE VIEW

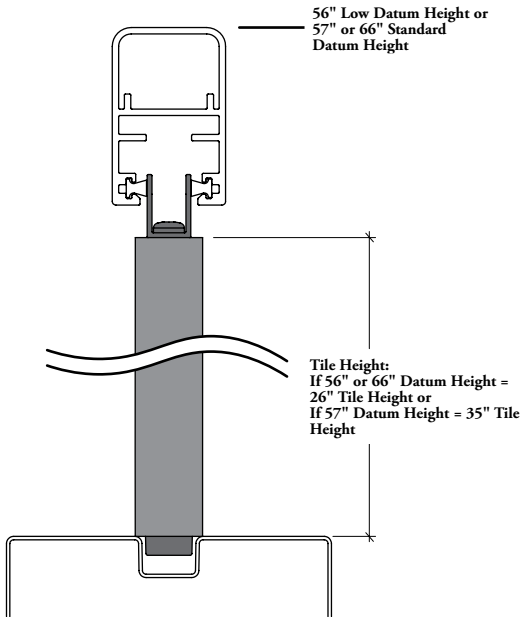

FABRIC TILE ONLY

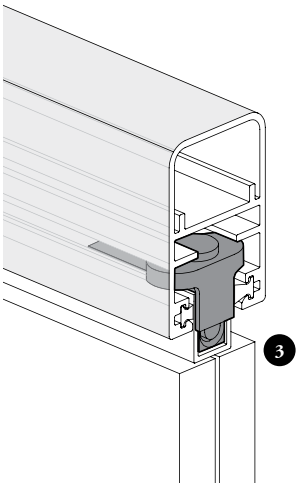

EVERY OTHER TILE FINISHES

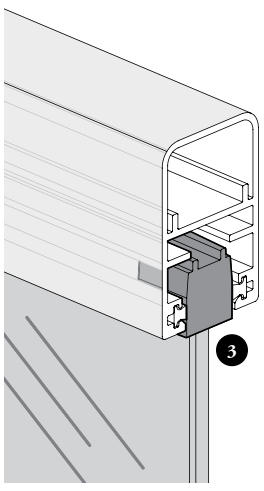

Anti-Dislodgement Device (Mandatory)

Anti-dislodgement devices are mandatory to secure Lift & Drop Tiles in place and eliminate injury risk

lift & drop tile basics

The Lift & Drop Tiles mounts between EZ Fence Beam and EZ Upper Rail for Lift & Drop to create full visual and territorial privacy. They also provide a multitude of functionalities for the user such as acoustical, writable, tackable, magnetic and accessorizable surface.

- Can be mounted on single-sided or shared EZ Fence Structure with Upper A-Frames and Upper Rail
- Once the tiles are in place, **no** sliding is allowed
- All dimensions are actuals and includes side gaps to allow hand clearance for the installation of the tile and its anti-dislodgement devices

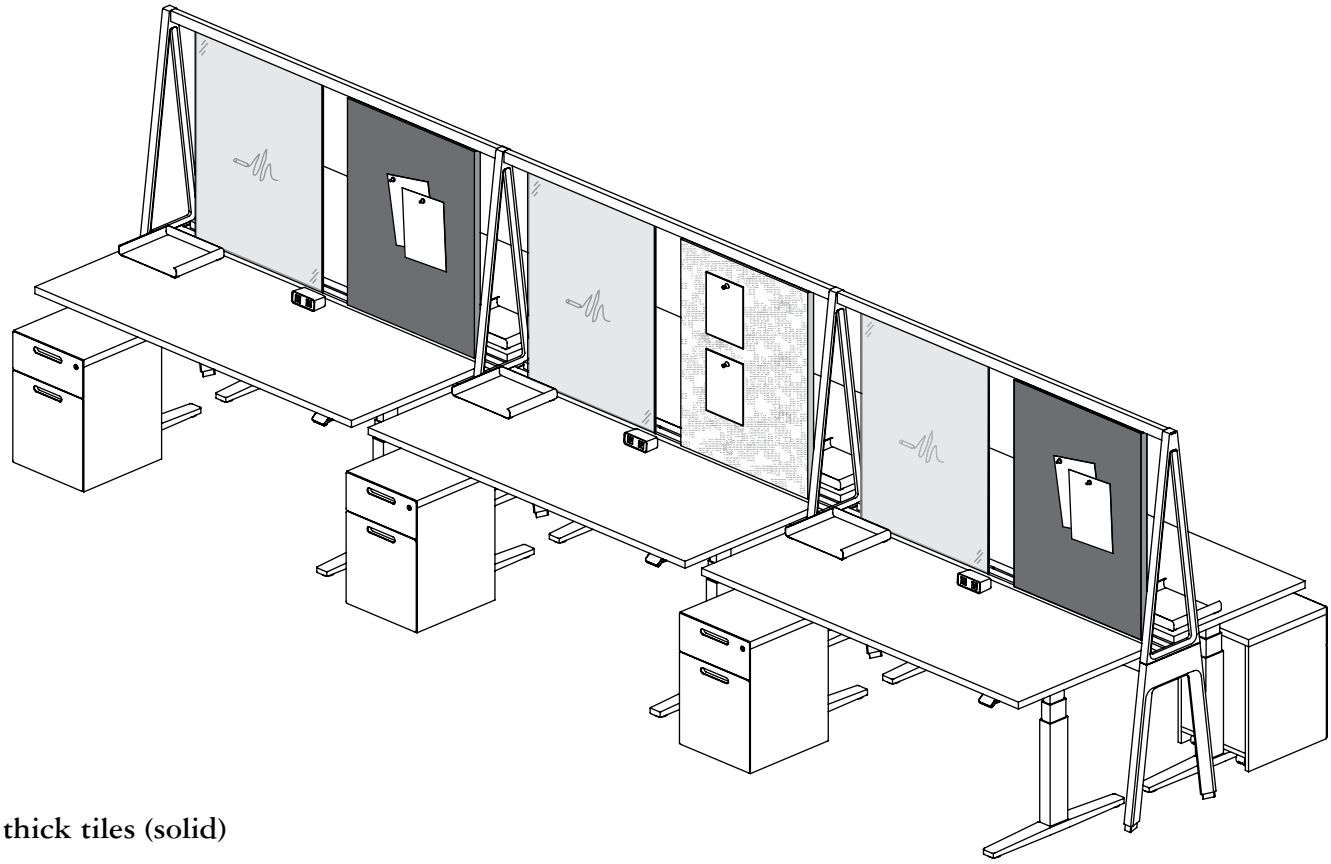

thick tiles (solid)

- Provides visual and territorial privacy
- Available 11/16" thick with a full width top finition that allows lift and drop installation
- 18" (L) or 28" (S) beam height are available
- 56", 57" or 66" datum height are available

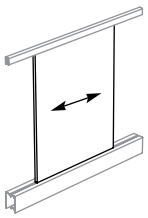

Lift & Drop Tile – Solid (JZTSH)
- Widths include 22" – 40" (3" increments) and 46" – 82" (6" increments)
- Grain direction on Solid tile is horizontal

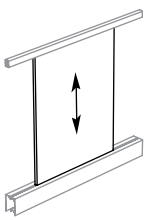

Lift & Drop Tile – Solid Vertical Grain (JZTSV)
- Widths include 22" – 37" (3" increments) and 46" – 58" (6" increments)
- Grain direction is vertical

lift & drop tile basics (continued)

thick tiles (tackable)

- Provides fabric, felt or cork space division, full visual and territorial privacy, and noises reduction control
- 18" (L) or 28" (S) beam height are available
- 56", 57" or 66" datum height are available
- Widths include 22" – 40" (3" increments) and 46" – 82" (6" increments)

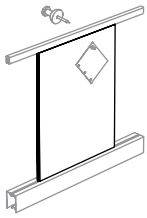

Lift & Drop Tile – Fabric (JZTF)

- Available in 7/8" thick
- Available with the same fabric on both sides

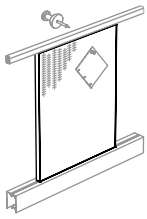

Lift & Drop Tile – Felt (JZTEL)

- Available 1 5/16" thick with flush framed and a full width top finition that allows lift and drop installation
- Available with the same felt on both sides

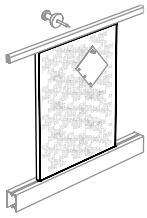

Lift & Drop Tile – Cork (JZTC)

- **Cork is a natural material made from flakes and can present some texture irregularity and apertures. Cork have antimicrobial properties that prevent growing of microorganism and has hypoallergenic properties. Cork is sensitive to ultraviolet and can present discoloration over time**
- Available 1 5/16" thick with flush framed and a full width top finition that allows lift and drop installation
- Available with the same Natural Cork finish on both sides

lift & drop tile basics (continued)

thin tiles

- 18" (L) or 28" (S) beam height are available
- 56", 57" or 66" datum height are available

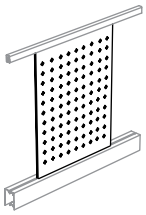

Lift & Drop Tile – Metal Accessory (JZTMA)

- Provides full visual and territorial privacy, allows playful visual with choice of patterns on both sides
- Can be specified with different outer and inset metal colors
- Allows the mounting of Metal Screen Accessories that can be personalized as the user required to fit personal items
- Available 1/2" thick
- Widths include 28", 34" and 40" only
- Two patterns are available:
  – Plus (P)
  – Square (S)
  and comes with the same pattern on both sides

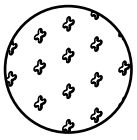

Plus (P)

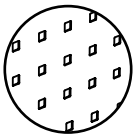

Square (S)

- Only Metal Screen Accessories (JNAPM) can be installed in these patterns and can be specified separately

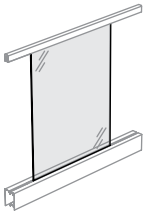

Lift & Drop Tile – Frosted Glass (JZTGG)

- Provides translucent visual and territorial privacy
- Available in 1/4" (6 mm) thick tempered glass
- Frosted Glass Finish present texture on one side compare to Satin Glass Finish that have texture on both sides
- Widths include 22" – 40" (3" increments) and 46" – 82" (6" increments)

thin tiles (writable)

- 18" (L) or 28" (S) beam height are available
- 56", 57" or 66" datum height are available
- Eight Rare Earth Magnets are included. Additional magnets (JNARM) are also available separately
- Can be used with dry erase markers only (**not** included). Dry-Erase Kit (JNAEK) can be specified separately
- Comes without marker tray, a Markerboard Tray (JNSMT) is available and can be specified separately

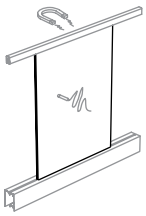

Lift & Drop Tile – Metal Markerboard (JZTMW)

- Provides full visual and territorial privacy with writable and magnetic surface on both sides
- Thickness of 1/2"
- Widths include 28" or 34"

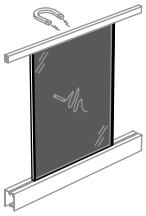

Lift & Drop Tile – Writable Magnetic Glass (JZTGM)

- Provides full visual and territorial privacy with writable and magnetic surface on both sides
- Thickness of 1/2" (Two 5/32" (4 mm) tempered glass with a sheet metal in-between with sides covered side metal frame)
- Widths include 22" – 40" (3" increments) and 46"

planning with lift & drop tiles

The following should be considered when planning with Lift & Drop Tiles.

- All tiles have the same functionality on both sides
- Can be used in Single-Sided configuration (against a wall or corridor) or Shared configuration
- Tiles can be specified on- or off-module, multiple tiles can be specified on the same EZ Fence Beam

on-module applications

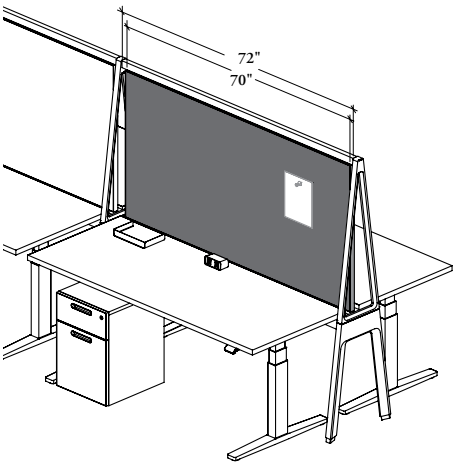

One Lift and Drop Tile Application

- When the Tile Width is specified 2" smaller than the Beam Width, the tile is considered "on-module"
- On-module tiles can be specified to create a minimalist look and add one functionality to the EZ Fence
- On-Module application provides minimal gaps of 1" on each sides of the tile
- Off-module tiles can also be used to create wider gaps for a more casual look

Example: 64" wide tile on 72" wide beam equal 4" gap on both sides

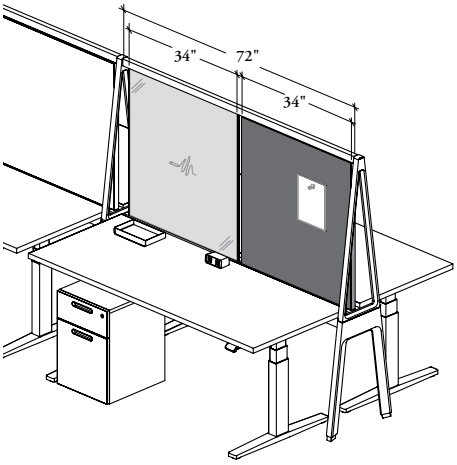

Multiple Lift and Drop Tiles with central clearance Application

- Multiple tiles can be specified on the EZ Upper A-Frame Structure to create dynamic look and add different functionalities to the EZ Fence
- Tiles of different widths and finishes can be combined on the same beam
- This application provides the more gaps that can be equally distributed in the EZ Upper A-Frame Structure

Examples: 2x Lift & Drop Tiles provide 3 gaps of 1 1/3"
3x Lift & Drop Tiles provide 4 gaps of 1 1/2"

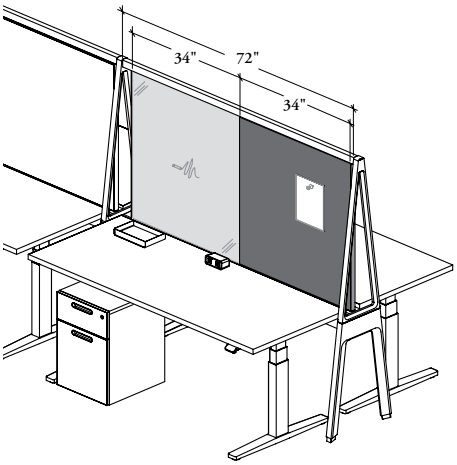

Multiple Lift and Drop Tiles without central clearance Application

- Central gap can be closed
- Gaps on both ends will then be larger

Examples: 2x Lift & Drop Tiles provide 2 gaps of 2" on both ends
3x Lift & Drop Tiles provide 2 gaps of 3" on both ends

planning with lift & drop tiles (continued)

off-module applications

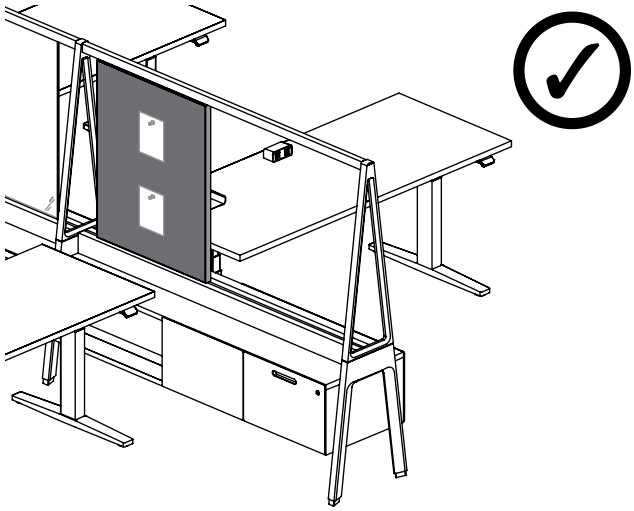

One Lift and Drop Tile Application

- A tile can be specified off-module, leaving an open section in the Upper A-Frame Structure

OR

- EZ Lift and Drop Vertical Poles (JZTPS) with Accessories – Lift and Drop Vertical Poles Mounted (JZTPA) can be specified next to a tile, on the space left

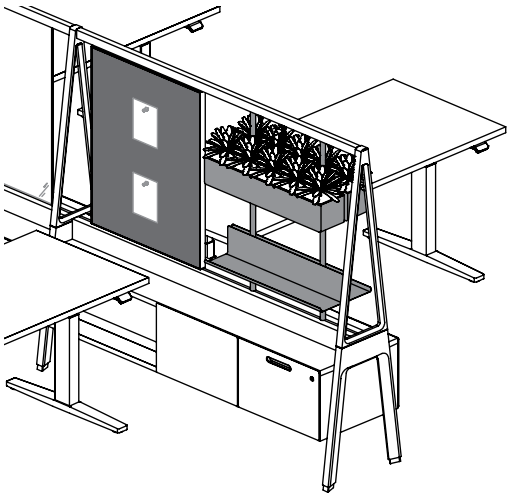

casual boards

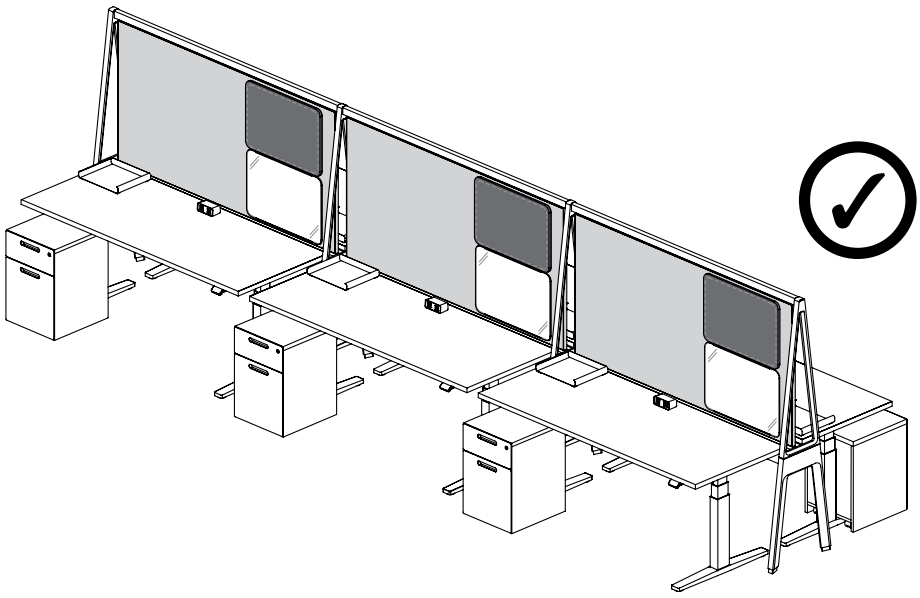

Lift and Drop Tiles with Casual Boards Application

Casual Boards can be mounted on many Lift and Drop Tiles. Refer to Casual Screens & Accessories section for more details

lift & drop media tile – solid basics

Lift and Drop Media Tile – Solid mount into EZ Upper A-Frame Structure to provide privacy and space division for a projection. Also allows the mounting of a monitor and cables managements to create a media center. Perfect for active collaborative environments.

- The solid panel installation on this tile is the same than the Solid or Solid Vertical Grain Lift and Drop Tiles. For more details, refer on page 110
- Can be mounted on shared EZ Fence Structure with Upper A-Frames and Upper Rail
- The tiles are fixed in place, **no** sliding is allowed
- All dimensions are actuals, side gaps is intended for a casual look and is required for Lift & Drop Tile insertion and anti-dislogement installation

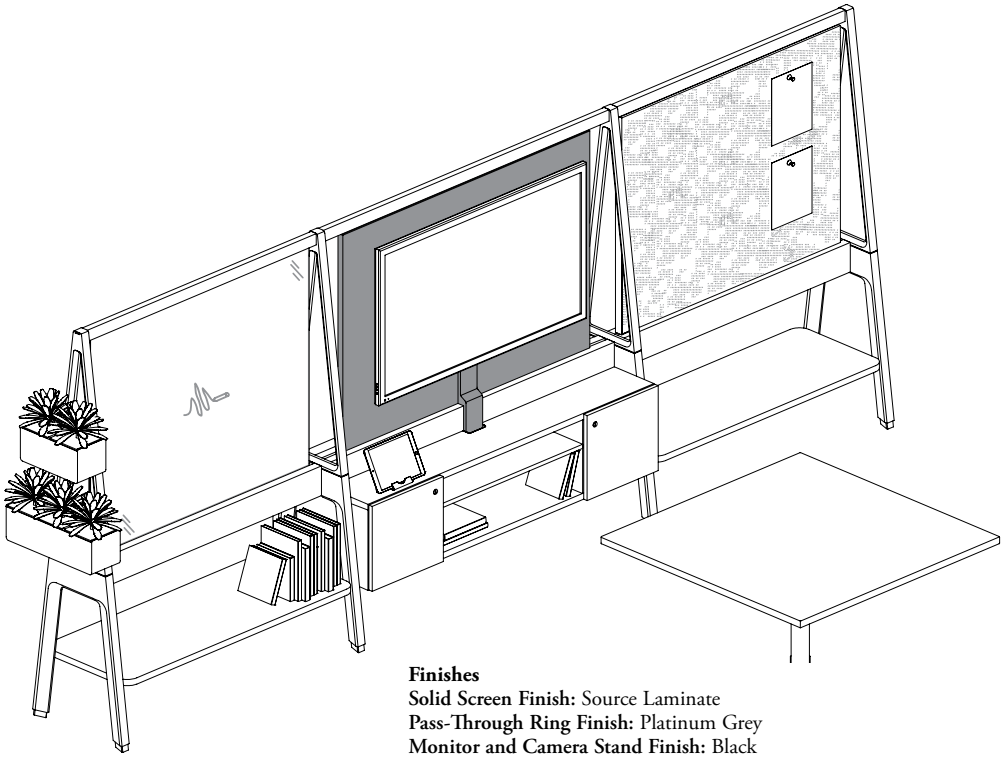

Finishes
Solid Screen Finish: Source Laminate
Pass-Through Ring Finish: Platinum Grey
Monitor and Camera Stand Finish: Black
Screen Hardware Finishes: Foundation, Mica Accent and Coordinate Colors*
The Screen Hardware Finish can be specified Coordinate Color to make the top extrusion more discreet
***Coordinate Colors** (available with Solid Screens) are pre-defined colors to be used to match wood print: Royal Cherry (M8), Ivory Birch (NB), Provincial Oak (NC), Coastal Elm (ND), Espresso Reflect (Q4), Stainless (Q6), Walnut Cathedralgrain (Q7), Mercurial Walnut (Q9), Java Walnut (R7), Urban Walnut (R8), Choice Maple (R9), Estate Cherry (V1), Campus Oak (VD), Flax Reflect (VL), Pecan Reflect (VV), Cocoa Brown Reflect (W8) and Sycamore Reflect (W9)
Vertical Manager Finishes: Foundation, Mica and Accent

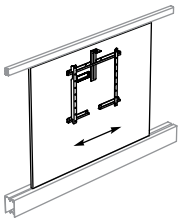

Lift & Drop Media Tile – Solid (JZTSM)

- Provides a monitor mounting and power routing management
- Only 28" (S) beam height is available
- 57" or 66" datum height are available
- Available in 11/16" thick with a full width top finition that allows lift and drop installation
- Widths include 46" – 82" (6" increments)
- Two Cable Managements are available:
  – Front Vertical Manager (F), ideal for open space application where the back is exposed
  – Pass-Through (P), ideal for application where the back is not exposed, like against a wall
- When a Pass-Through (P) Cable Management is **not** specified, Glass and/or Felt Casual Boards can be specified separately on opposite side for more functionalities
- Grain direction on Solid tile is horizontal

planning with lift & drop media tile – solid

The following should be considered when planning with Lift & Drop Media Tiles – Solid.

- Allows the mounting of a monitor screen on one side only
- It is recommended to use this tile on a Shared EZ Fence Structure in conjunction with a EZ Suspended Credenza – Media Center – Single-Sided (JZBSM) for an optimal media center application
- Can also be mounted on a Single-Sided EZ Fence Structure, but cable management solutions will be limited
- Two Cable Mangement options are available:

pass-through (P)

A Pass-Through cut-out located behind the monitor allows cabling behind the Lift and Drop Media Tile – Solid

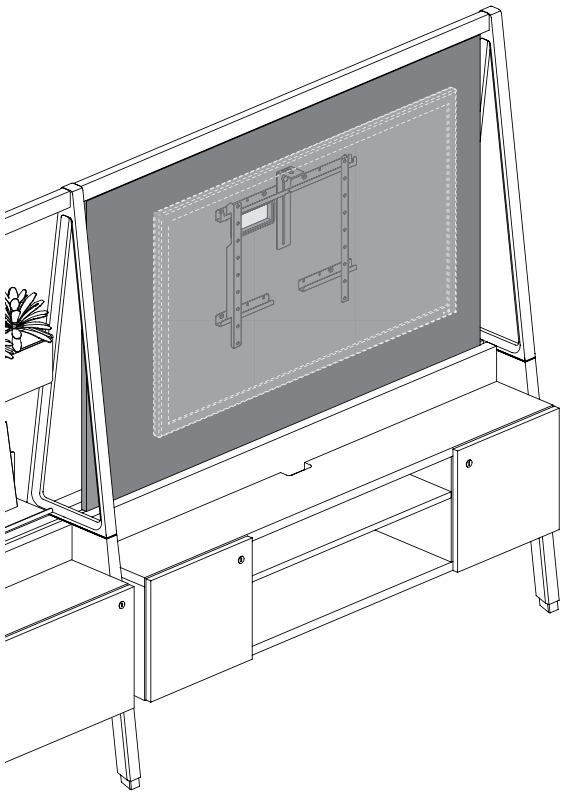

- Comes with a horizontal pass-through cut-out. A Cable Pass-Through Ring is also provided to protect the cabling
- As the cabling is visible from back, this cable management option must be used only when against a wall

SIDE VIEWS

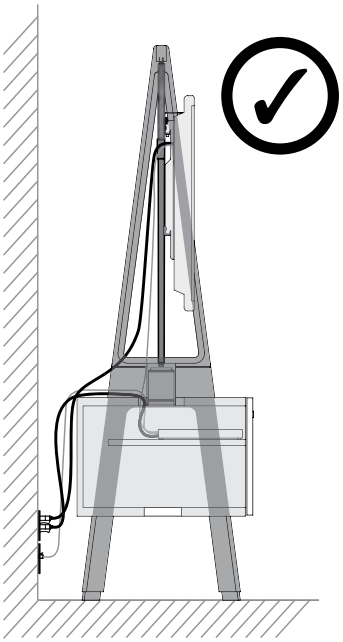

Direct to Wall Outlets

Wires routed to the back of the Media Tile can be plugued directly to wall outlets

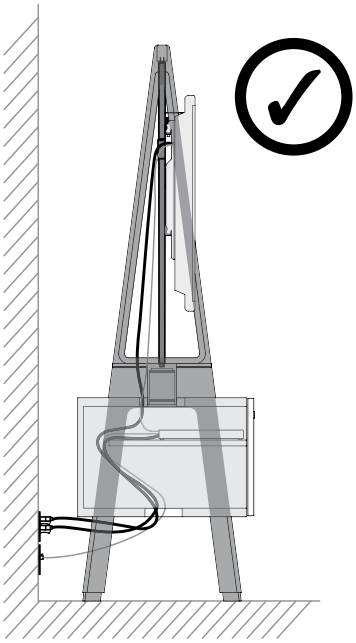

Inside EZ Suspended Credenza – Media Center

Wires routed to the back of the Media Tile can also go inside the credenza:
- through the pass-through cover to reach wall outlets from under the credenza (Shown)
- to reach a Facing Down Power Box

planning with lift & drop media tile – solid (continued)

front vertical manager (F)

- Front Vertical Manager allows cable management in front of the Lift and Drop Media Tile – Solid. It is easily accessible without any tools
- Is only compatible with EZ Suspended Credenza – Media Center – Single-Sided (JZBSM)

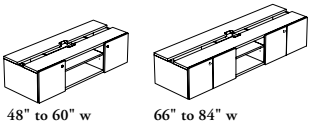

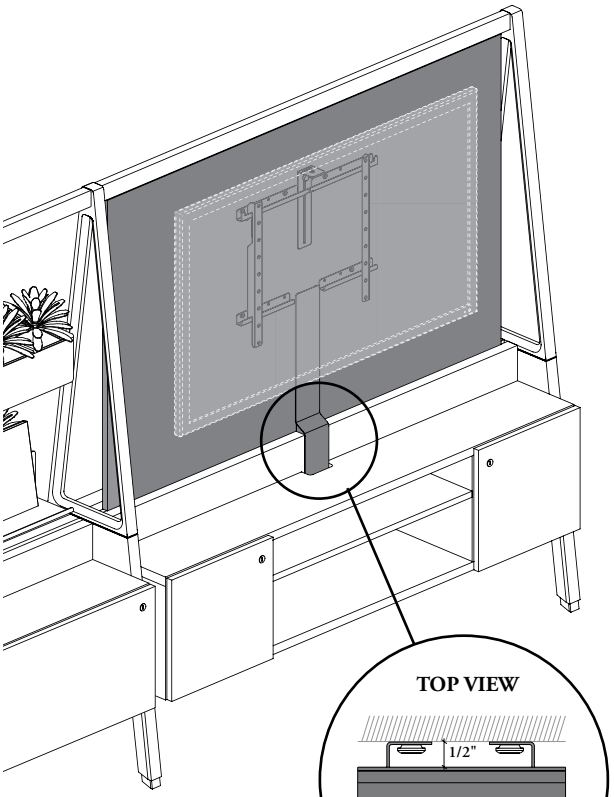

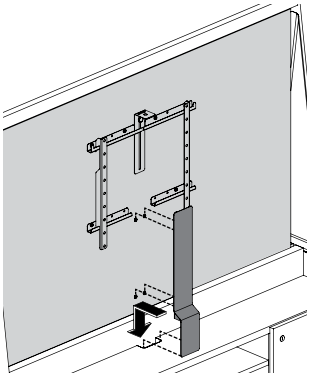

- Front Vertical Manager fits the EZ Fence Beam Cover

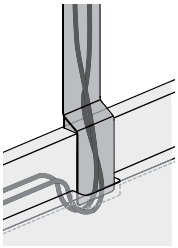

- Front Vertical Manager also fits into the scallop of EZ Single-Sided Suspended Credenza – Media Center to create a discreet cable management

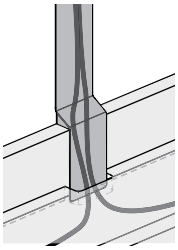

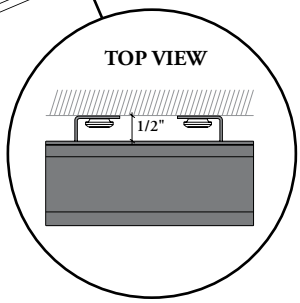

- Cabling is completely hidden by the Front Vertical Manager. The back of the Solid Lift and Drop Media Tile presents no alteration. This cable management option is ideal for open space applications but can also be used against a wall or in a corridor application
- Combined with Facing Down Power Box and Single-Sided Suspended Credenza – Media Center, this cable management option leaves **no** exposed wires

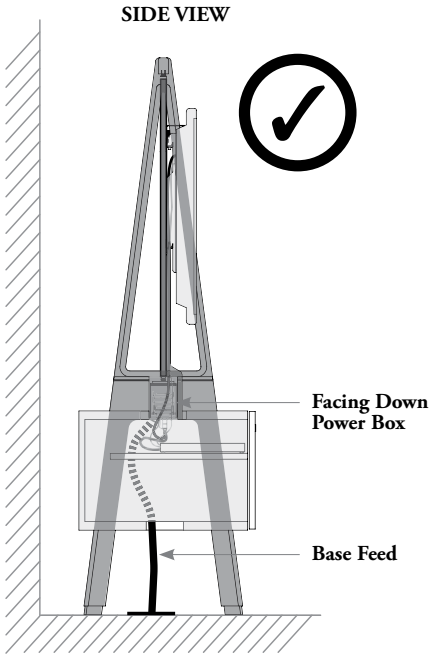

Suspended Credenza Media Tile to Facing Down Power Box (Shown) or to wall outlets

Wires on back of the Monitor Screen are routed inside of the suspended credenza to Facing Down Power Box or to wall outlets

planning with lift & drop media tile – solid (continued)

on-module applications

Solid Lift and Drop Media Tile can be specified on-module with EZ Upper A-Frame Structure. When the Tile Width is specified 2" smaller than the Beam Width, the tile is considered "on-module"

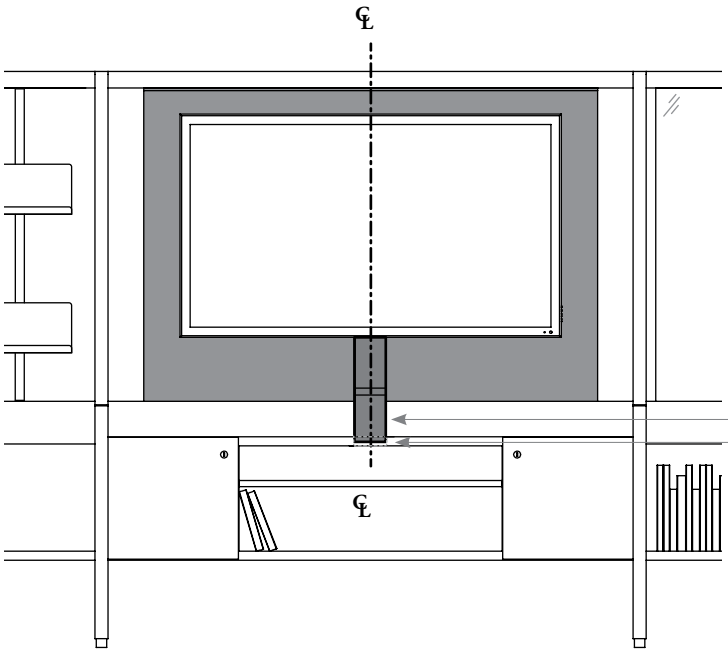

When Front Vertical Manager option is specified, the Solid Lift and Drop Media Tile must be centered with the EZ Suspended Credenza – Media Center – Single-Sided to align the two Cable Management devices

off-module applications

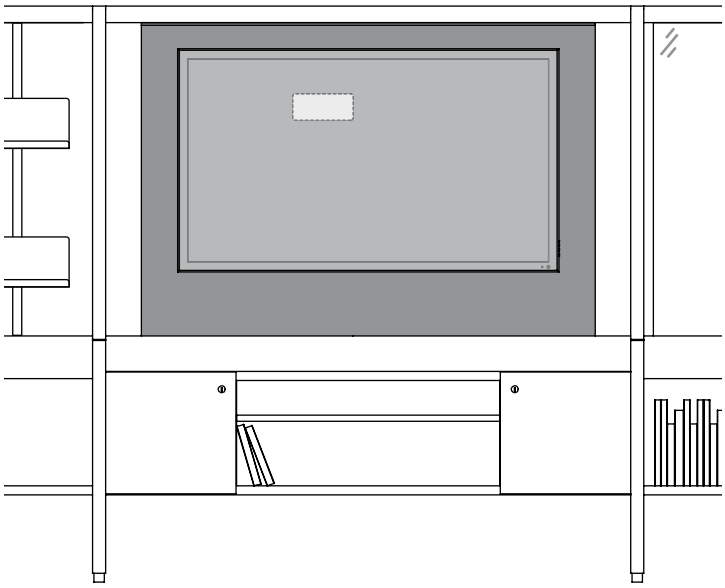

A Solid Lift and Drop Media Tile centered on a beam can be specified on-module for maximum of privacy or off-module to create a more casual layout with larger gaps

planning with lift & drop media tile – solid (continued)

off-module applications (continued)

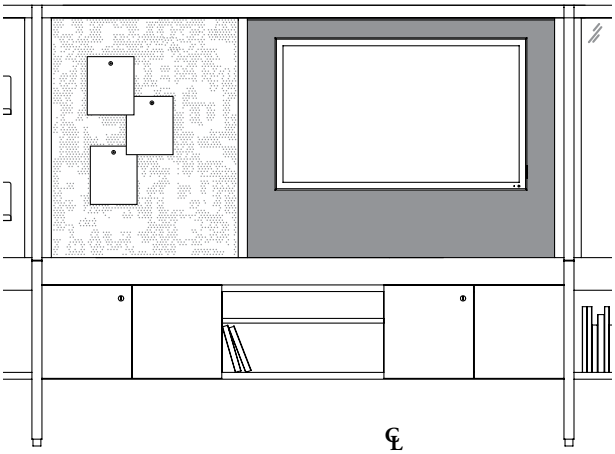

Solid Lift and Drop Media Tile can be used off-module in EZ Upper A-Frame only when Pass-Through (P) Cable Management is specified

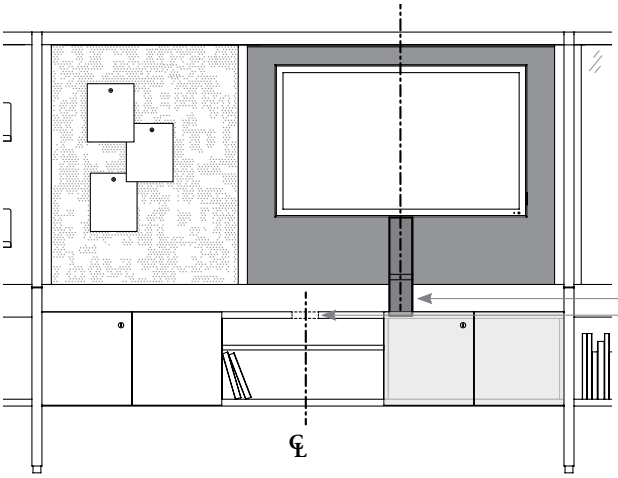

Solid Lift and Drop Media Tile **cannot** be used off-module in EZ Upper A-Frame when Front Vertical Manger (F) is specified. The Front Vertical Manager will **not** fit into the scallop centered on EZ Single-Sided Suspended Credenza – Media Center

casual boards (back view)

Lift and Drop Media Tile with Casual Boards Application

Casual Board – Glass (JNSCG) and/or Casual Board – Felt (JNSCE) can be mounted on the back of Lift and Drop Media Tile – Solid (JZTSH) when Front Vertical Manager (F) is specified to provide additional writable and/or tackable surface to users. Refer to Casual Screens & Accessories section, for more details

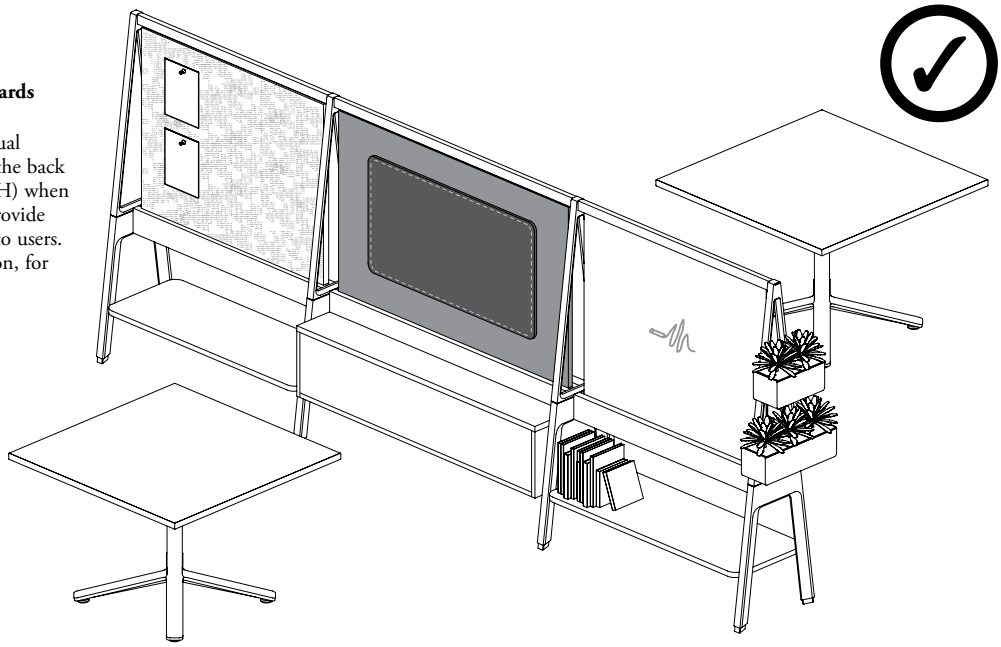

planning with monitor & camera support

Only included with Lift and Drop Media Tile – Solid

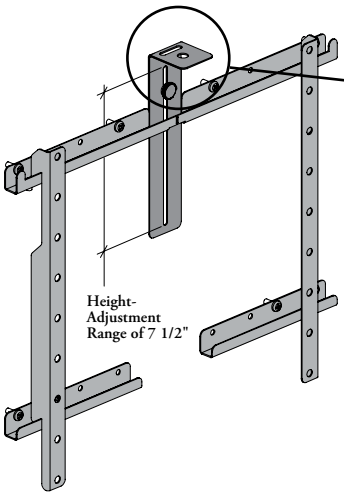

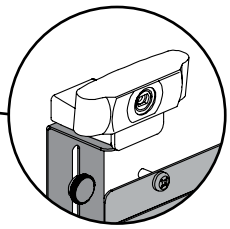

Adjustable Camera Bracket

- For video conference requirements. Camera **not** included
- Allows mounting of most cameras
- Allows 7 1/2" of adjustability with a thumb screw

Monitor Mounting Bracket
Meets VESA (Video Electronics Standards Association) standards for easy installation. Monitor **not** included

Wall Horizontal Rails

- Full length rail allow easy monitor mounting
- Come with end stoppers to prevent monitor failling during installation

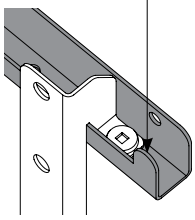

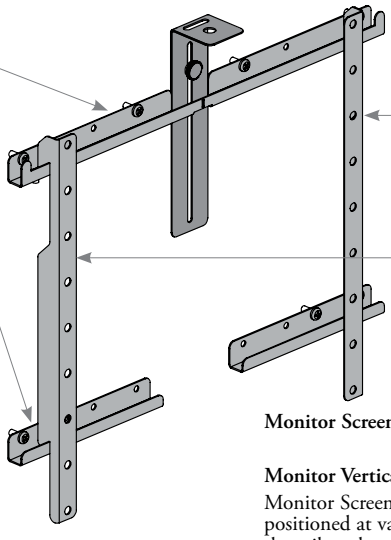

Monitor Vertical Rails

- Fits monitor from VESA 100 x 100 to VESA 600 x 400

FRONT VIEW

Monitor Screen

Monitor Vertical Rails
Monitor Screen can be positioned at various height on the rails to keep them hidden

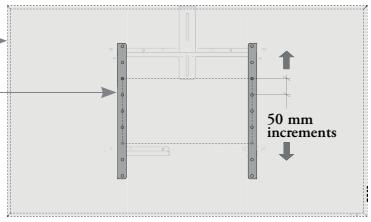

- Come with fixation holes to lock the monitor in place and to ensure the monitor is centered on the tile

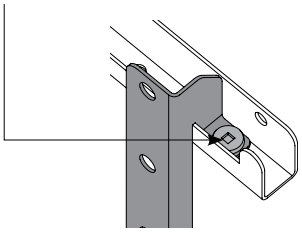

planning with monitor & camera support (continued)

monitor & camera support (continued)

Monitor General Information

- The Monitor Mounting Bracket included with Lift and Drop Media Tile – Solid is designed to accommodate a variety of display up to 70" wide. For a better fit, refer to specification software and refer at the monitor mounting pattern documentation
- Monitor **cannot** exceed 50 lbs
- The monitor should never exceed the width of the tile on which it is mounted

FRONT VIEWS

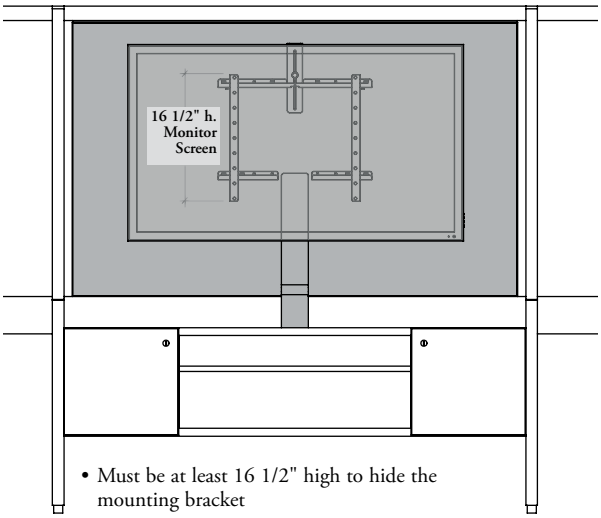

- Must be at least 16 1/2" high to hide the mounting bracket

57" Datum Height Tile with Monitor

- Can accommodate a variety of monitor between 32" to 50" wide
- It is recommended that the monitor screen has a maximum of 27 1/2" high. Otherwise the monitor could be visible from the back of the tile or may **not** be installable

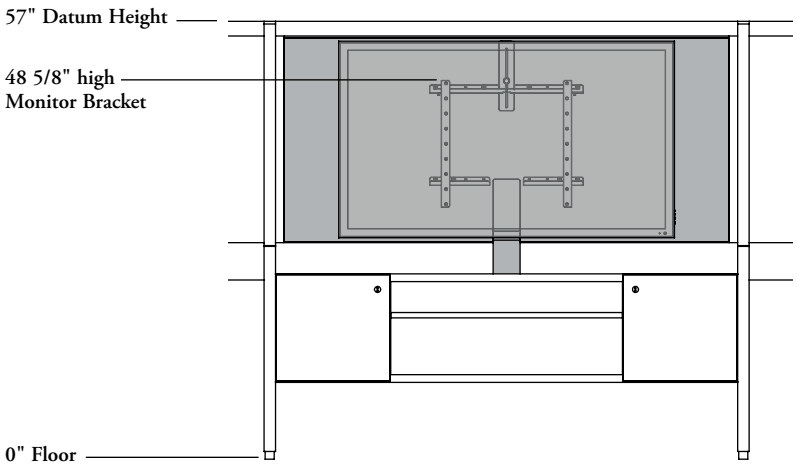

66" Datum Height Tile with Monitor

- Can accommodate a variety of monitor between 32" to 70" wide
- It is recommended than the monitor screen has a maximum of 36 1/2" high. Otherwise the monitor could be visible from the back of the tile or may **not** be installable

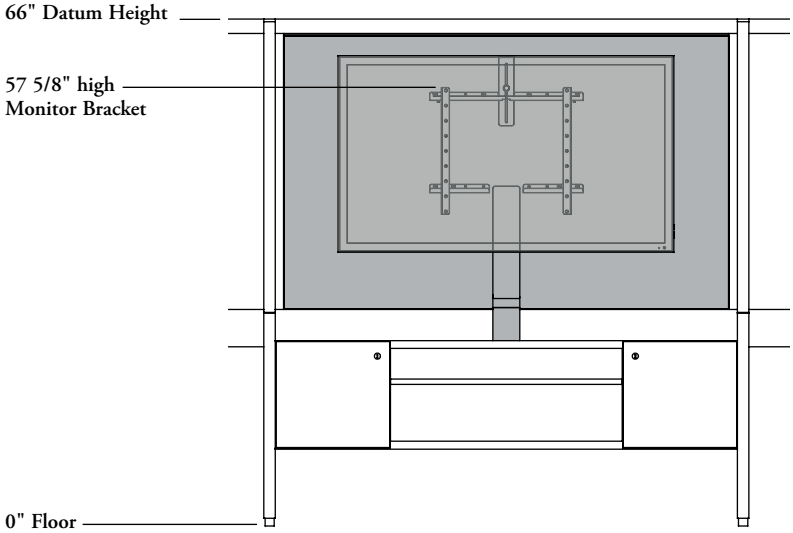

understanding lift & drop vertical poles

- Are installed in a simple lift and drop motion and secured in place by a locking device
- Installation and reconfiguration must be done by a Teknion Certified Installer

lift and drop vertical poles installation

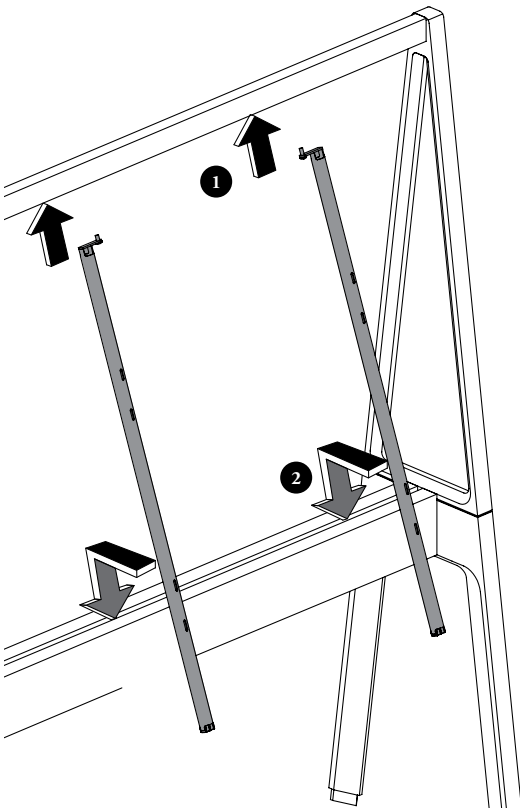

Lift and Drop Vertical Poles

1. Lift the poles inside the groove of the EZ Upper Rail for Lift & Drop Tile mounted between two EZ Upper A-Frames – Single-Sided or Shared
2. Drop the poles inside the groove of the EZ Fence Beam or EZ Fence Beam for Corridor with Lift & Drop (T) option

SIDE VIEW

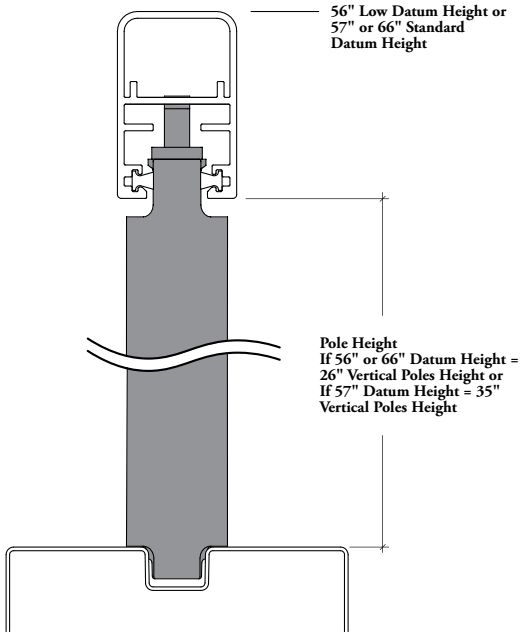

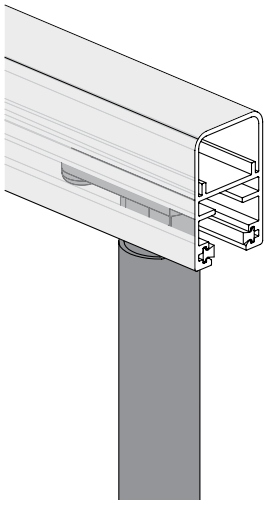

Locking Device (Mandatory)

Locking Devices are mandatory to secure Lift & Drop Vertical Poles in place and eliminate injury risk

lift & drop vertical poles basics

The Lift and Drop Vertical Poles mount between EZ Fence Beam and EZ Upper Rail for Lift and Drop Tile. Mounting of accessories is possible on both sides to create partial visual and territorial privacy.

- Can only be mounted on single-sided (against wall or corridor) or shared EZ Fence Structure with Upper A-Frames and Upper Rail
- Only Accessories – Lift and Drop Vertical Poles Mounted (JZTPA) can be used with Vertical Poles.

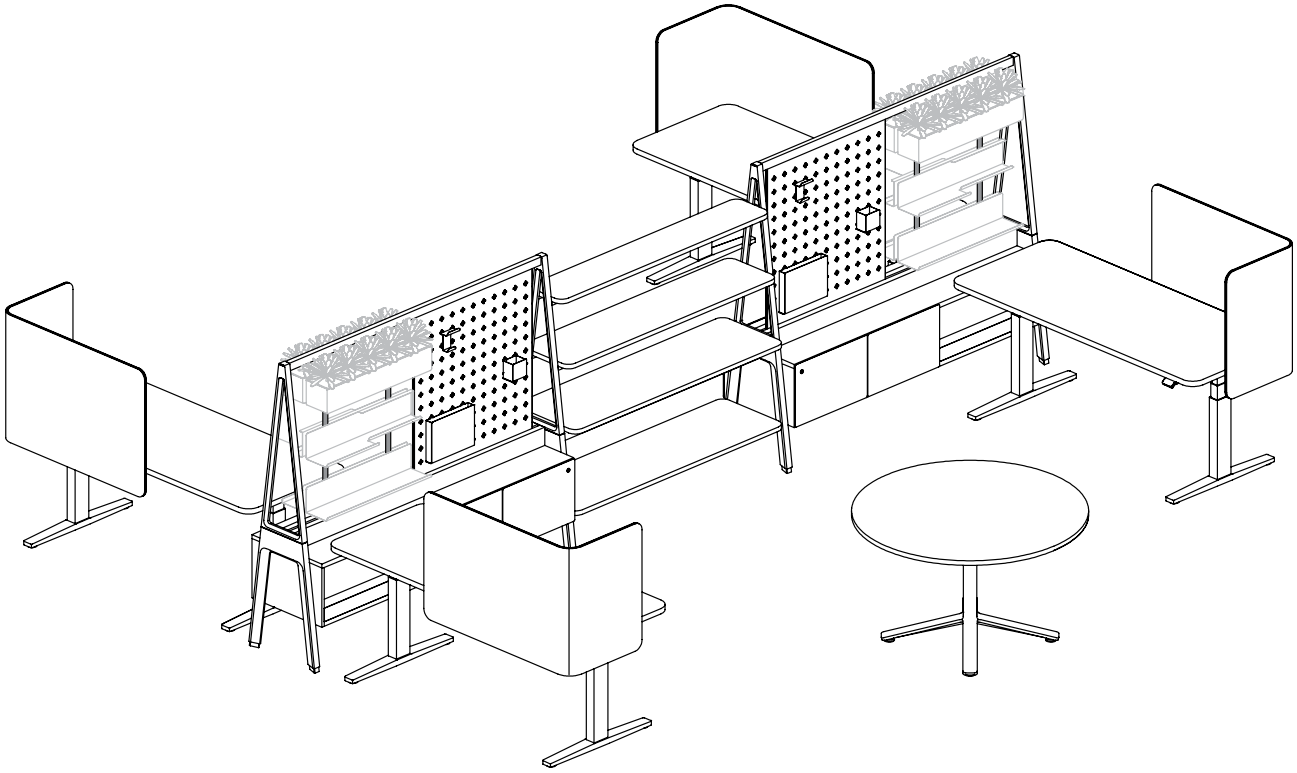

Finishes
Pole Finishes: Foundation, Mica and Accent

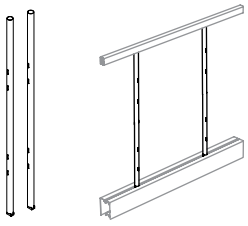

Lift and Drop Vertical Poles (JZTPS)

- Include two Vertical Poles that allow mounting of accessories on both sides
- 18" (L) or 28" (S) beam height are available
- 56", 57" or 66" datum height are available
- Widths include 24" – 42" (6" increments)
- Two Accessories Configurations:
  – Two-Accessories Height (2)
  – Three-Accessories Height (3)

understanding accessories – lift & drop vertical poles mounted

The Lift and Drop Vertical Poles (JZTPS) can be specified with Two- (2) or Three-Accessories (3) Configurations

accessories – lift and drop vertical poles mounted installation

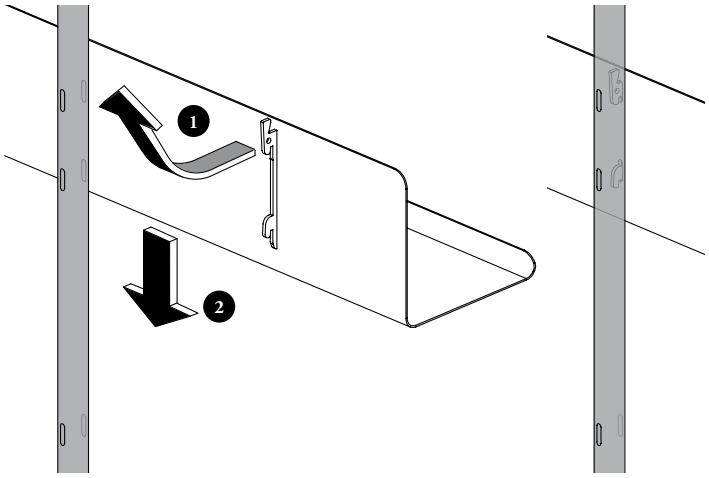

Accessories

1. Lift inside first slot of the Lift and Drop Vertical Poles
2. Drop inside second slot of the Lift and Drop Vertical Poles

datum heights & utility space

- These information illustrated below are applicable with following accessories:
  - Book Display (JZTPAB)
  - 6" Shelf (JZTPAS)
  - Shelf/Book Display – Left (JZTPAL) or Book Display/Shelf – Right (JZTPAR)
- When Planter Box (JZTPAP) is used, refer to Planning with Planter Box for more information

18" High Beam Position (Low Height Fence Applications)

Two-Height Accessories

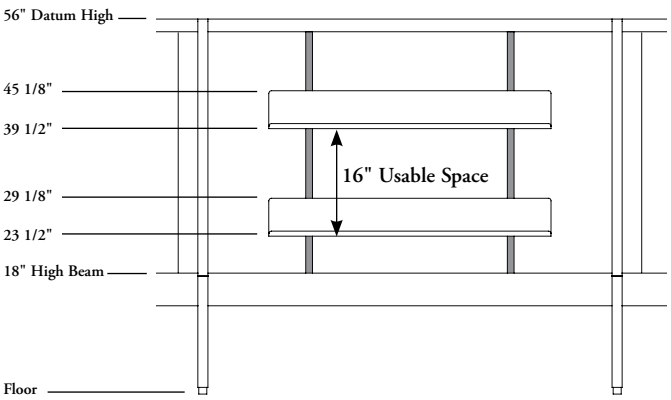

Three-Height Accessories

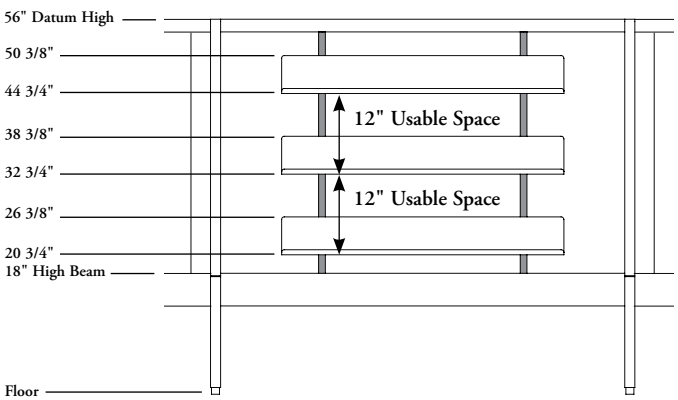

understanding accessories – lift & drop vertical poles mounted (continued)

datum heights & utility space (continued)

28" High Beam Position (Standard Height Fence Applications)

Three-Height Accessories (3) option is **not** available with 57" Datum Height

Two-Height Accessories

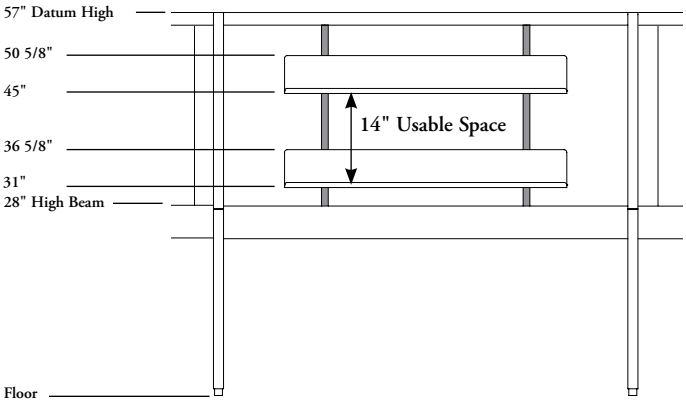

28" High Beam Position (Standard Height Fence Applications)

Two-Height Accessories

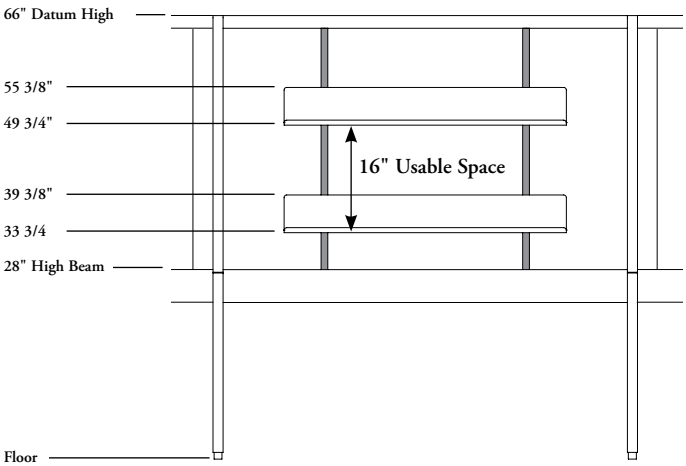

Three-Height Accessories

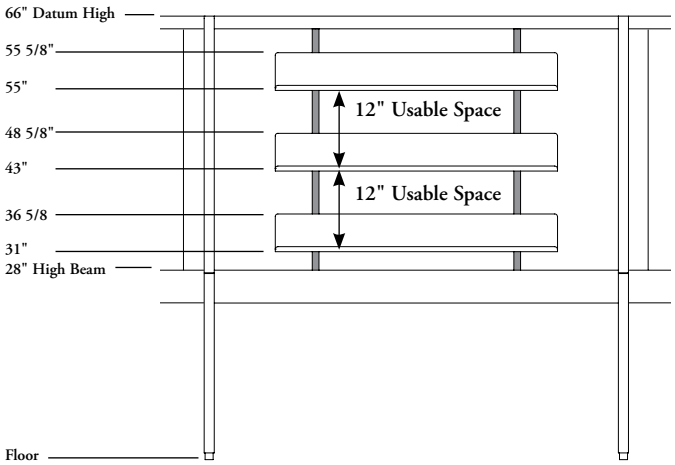

accessories – lift & drop vertical poles mounted basics

These accessories can only be mounted on Lift and Drop Vertical Poles to create partial visual and space division in a floating look.

- Can only be mounted on single-sided (against wall or corridor) or shared EZ Fence Structure with Upper A-Frames Structure and Lift and Drop Vertical Poles Mounted. Restrictions are applicable, refer on page 130 for more details
- All dimensions are actuals

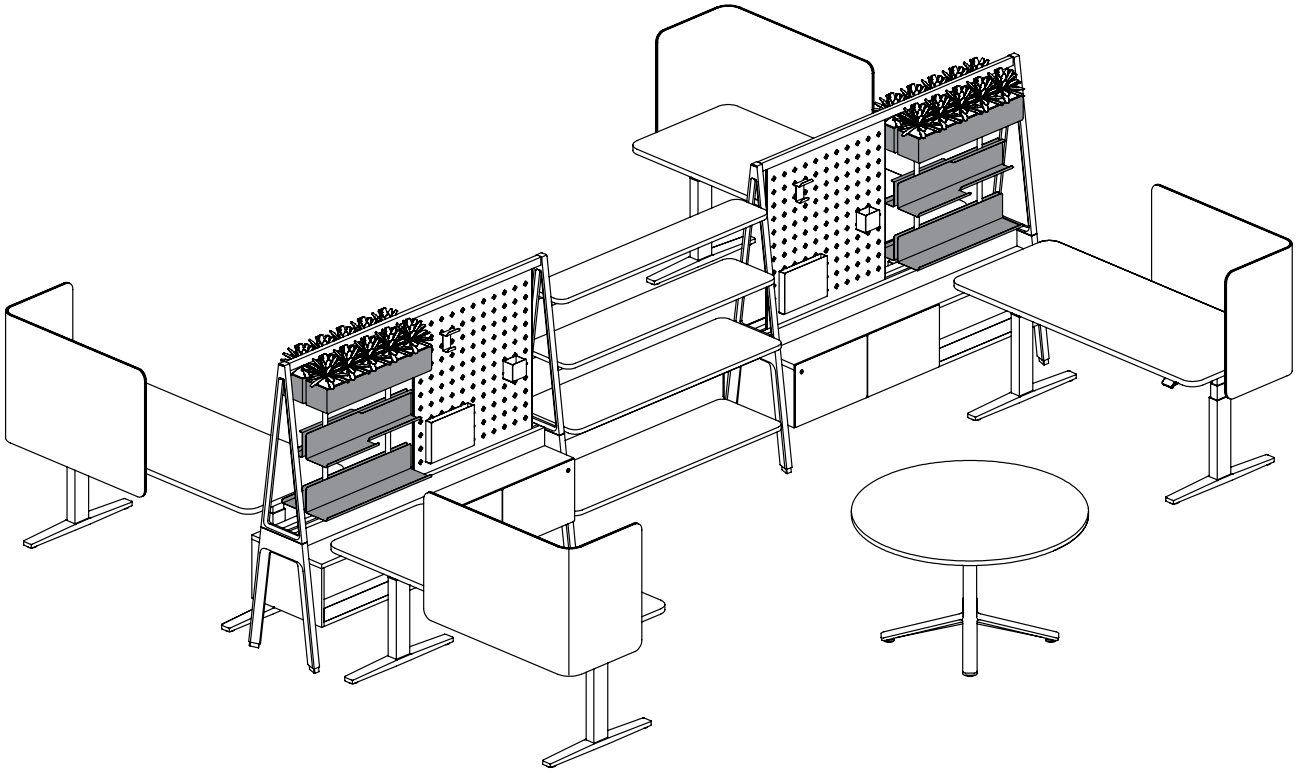

Finishes
Accessory Finishes: Foundation, Mica and Accent
Planter Liner Finish: Black

Accessories – Lift and Drop Vertical Poles Mounted (JZTPA)

- The accessories provide display space or light shelving for books, frames, personal items, etc...
- Widths include 24" – 42" (6" increments)
- Five Accessories Configurations:

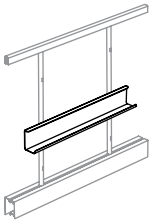

Book Display (B)

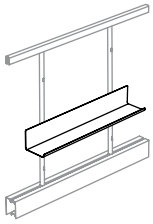

6" Shelf (S)

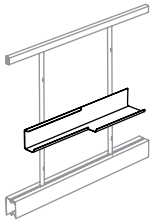

Shelf/Book Display – Left (L)

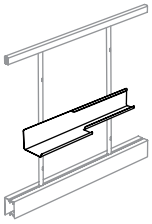

Book Display/Shelf – Right (R)

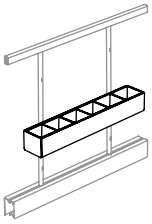

Planter Box (P)

accessories – lift & drop vertical poles mounted basics (continued)

accessory descriptions

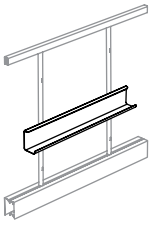

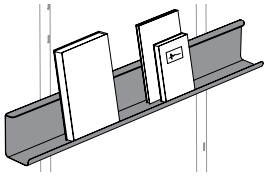

Book Display (B)

- Provides a space to display books, frames, etc...
- Maximum capacity 40 lbs
- The back of the Book Display **cannot** allow mounting of additional Metal Screen Accessories (JNAPM)
- Dimensions:

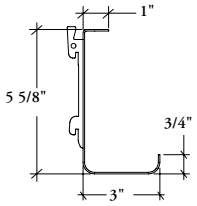

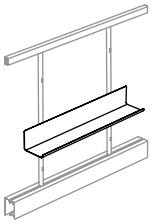

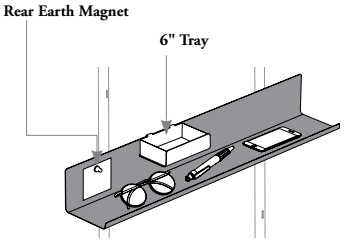

6" Shelf (S)

- Provides a space to organize personal items
- Maximum capacity 40 lbs
- The back of the shelf allows mounting of additional Metal Screen Accessories:
  – 6" Tray (JNAPMT)
  – 12" Tray (JNAPMU)
  – Pencil Holder (JNAPMP) and
  Rear Earth Magnets (JNARM) for display small items
- Dimensions:

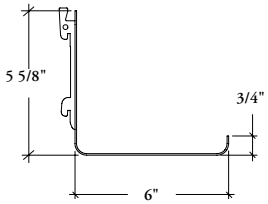

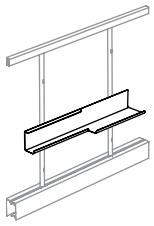

Shelf/Book Display – Left (L)

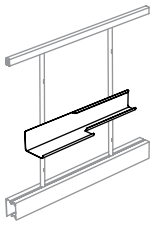

Book Display/ Shelf – Right (R)

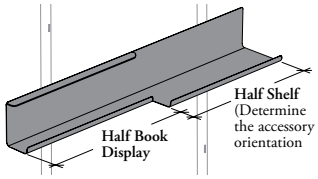

Shelf/Book Display – Left (L) or Book Display/Shelf – Right (R)

- These accessories are offered in Left (L) or Right (R) and are divided half and half: half Book Display section provides display space for books and frames and half Shelf section provides a space to organize personal items
- Maximum capacity 40 lbs
- The back of the Book Display section **cannot** allow mounting of additional Metal Screen Accessories (JNAPM) and Rear Earth Magnets (JNARM) to display small items
- Dimensions:

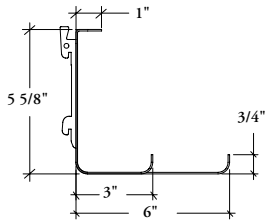

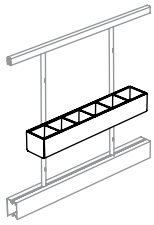

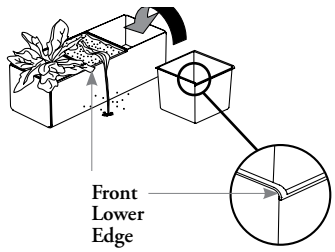

Planter Box (P)

- Allows integration of planters over EZ Fence Beam on workstation
- Maximum capacity 40 lbs
- Planter Liners are included to protect the metal Planter box by covering all metal edges and to manage exceeding watering in only one direction to reduce water spreading
- Dimensions:

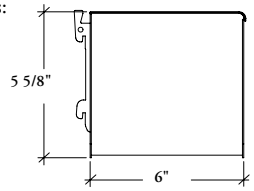

Width	Number of Liners
24"	4
30"	5
36"	6
42"	8

planning with accessories – lift & drop vertical poles mounted

The following should be considered when planning with Accessories – Lift & Drop Vertical Poles Mounted.

position & reconfigurability

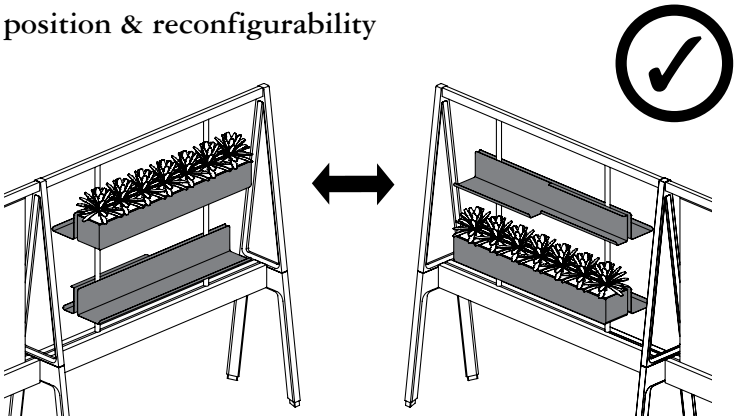

The Accessories – Lift and Drop Vertical Poles Mounted can be placed at any position on the Vertical Poles and are reconfigurable without any tools

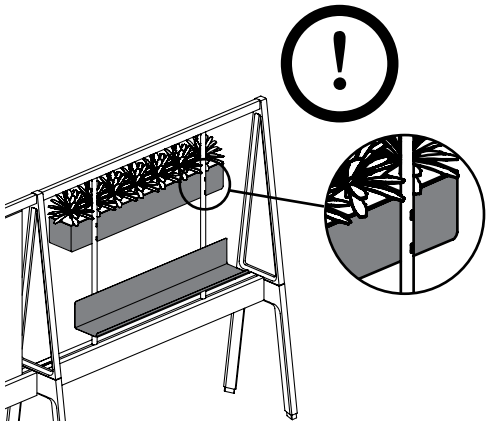

The Lift and Drop Vertical Poles allow mounting of Accessories on both sides. It is recommended to use all accessory spaces available on Lift and Drop Vertical Poles to avoid installation slots to be exposed. In a Single-Sided EZ Fence application against a wall, or with EZ Floor Screen – Beam-Mounted, leaving the back of the poles empty is not a problem since the slots will **not** be visible

For more details on datum heights and utility space, refer on page 126 and 127

single-sided application

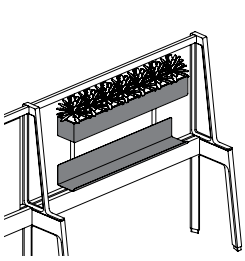

57" or 66" Datum Height Configuration

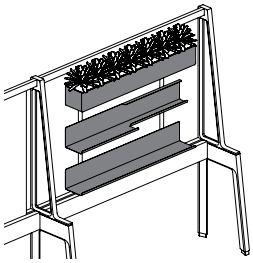

66" Datum Height Configuration

- 57" or 66" Datum Height Configuration can be specified with Two-Height Accessories (2) for two accessories
- Only 66" Datum Height Configuration can be specified with Three-Height Accessories (3) for three accessories

shared application

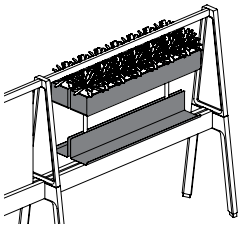

56", 57" or 66" Datum Height Configuration

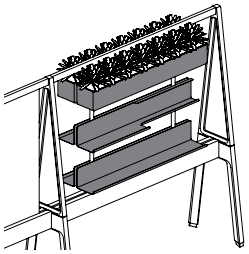

56" or 66" Datum Height Configuration

- 56", 57" or 66" Datum Height Configuration can be specified with Two-Height Accessories (2) for two accessories on each side
- Only 56" or 66" Datum Height Configuration can be specified with Three-Height Accessories (3) for three accessories on each side

planning with accessories – lift & drop vertical poles mounted (continued)

height-adjustability application

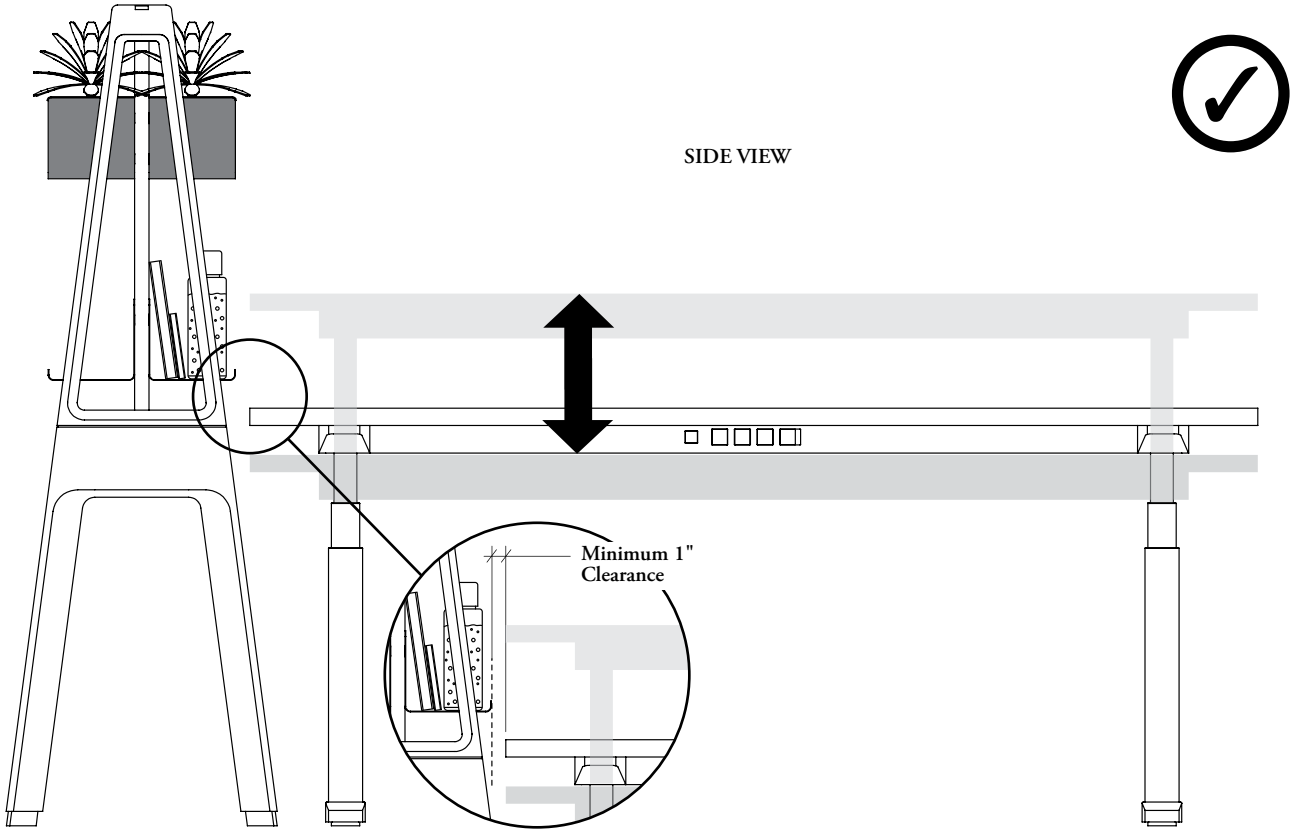

Accessories – Lift and Drop Vertical Poles Mounted exceed the EZ Fence Beam

A minimum 1" clearance between the accessories and Height-Adjustable Tables is required to avoid collision. Refer to Height-Adjustability section for more details

planning with accessories – lift & drop vertical poles mounted (continued)

planter box (P) positions

FRONT VIEW

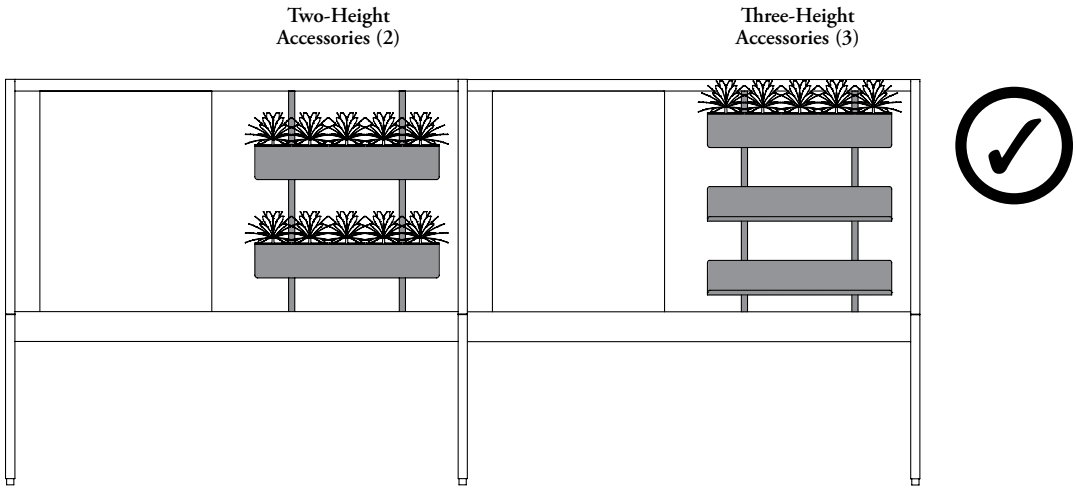

Can be placed at any position on the pole. For high plant and to allow growing of plant we recommend to use the Two-Height Accessories (2) or place the Planter Box at the top position of the Three-Height Accessories (3)

FRONT VIEW

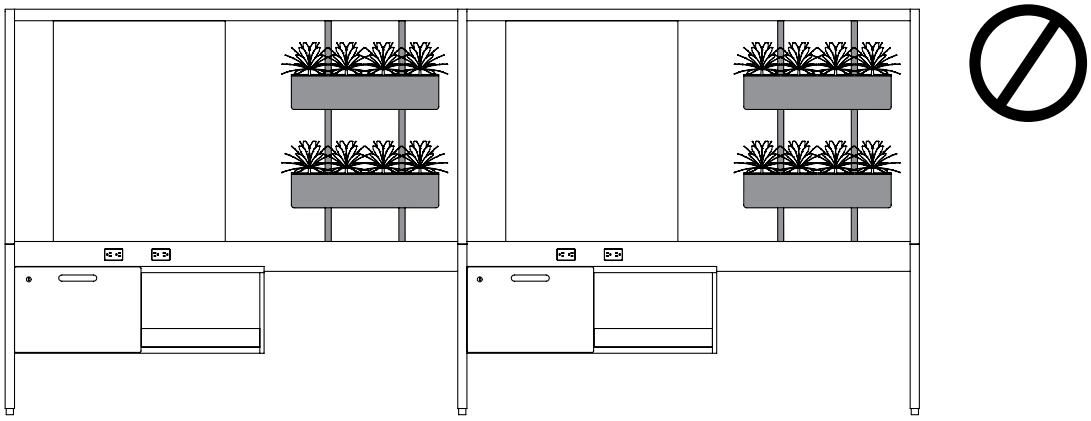

Planter Boxes Vertical System **cannot** be specified on a beam with facing side outlets, even if there is **no** overlap between the two products

planning with accessories – lift & drop vertical poles mounted (continued)

on-module applications

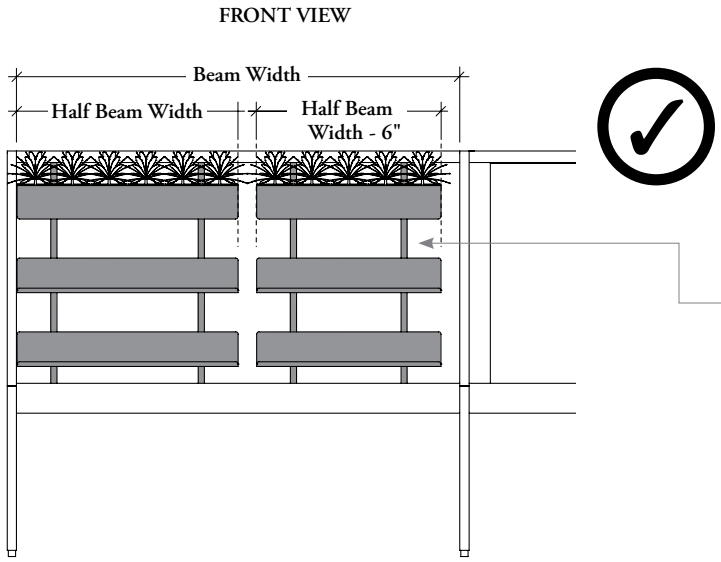

Accessories – Lift & Drop Vertical Poles Mounted

The dimensions are actual. Therefore, they must always be specified shorter than the beam on which there are mounted. When multiple Lift & Drop Vertical Poles are specified on the same beam, the Total Width of the accessories must be at least 6" shorter than the Beam Width

Example:

A 36" and a 42" wide accessories on a 84" wide beam

Two 30" wide accessories on a 66" wide beam

off-module application

Can be combined with Lift and Drop Tile to fill the space between the EZ Upper A-Frames

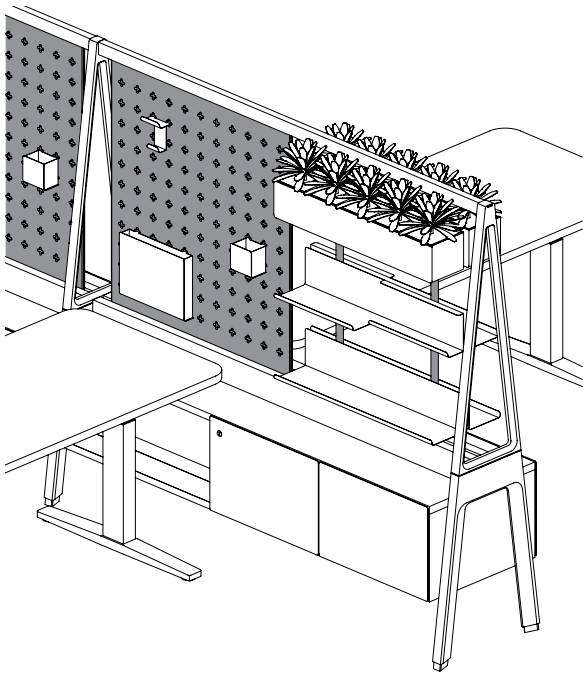

As EZ Lift and Drop Tile already have gaps for the lift and drop anti-dislogment device installation, the Accessories – Lift and Drop Vertical Poles Mounted can be ordered to fill the remaining space

understanding planter box kit & laminate shelves – ez upper A-frame mounted

Expansion Cityline offers a variety of products to accessorise the EZ Upper A-Frame Structure by adding storage space or biophilia integration.

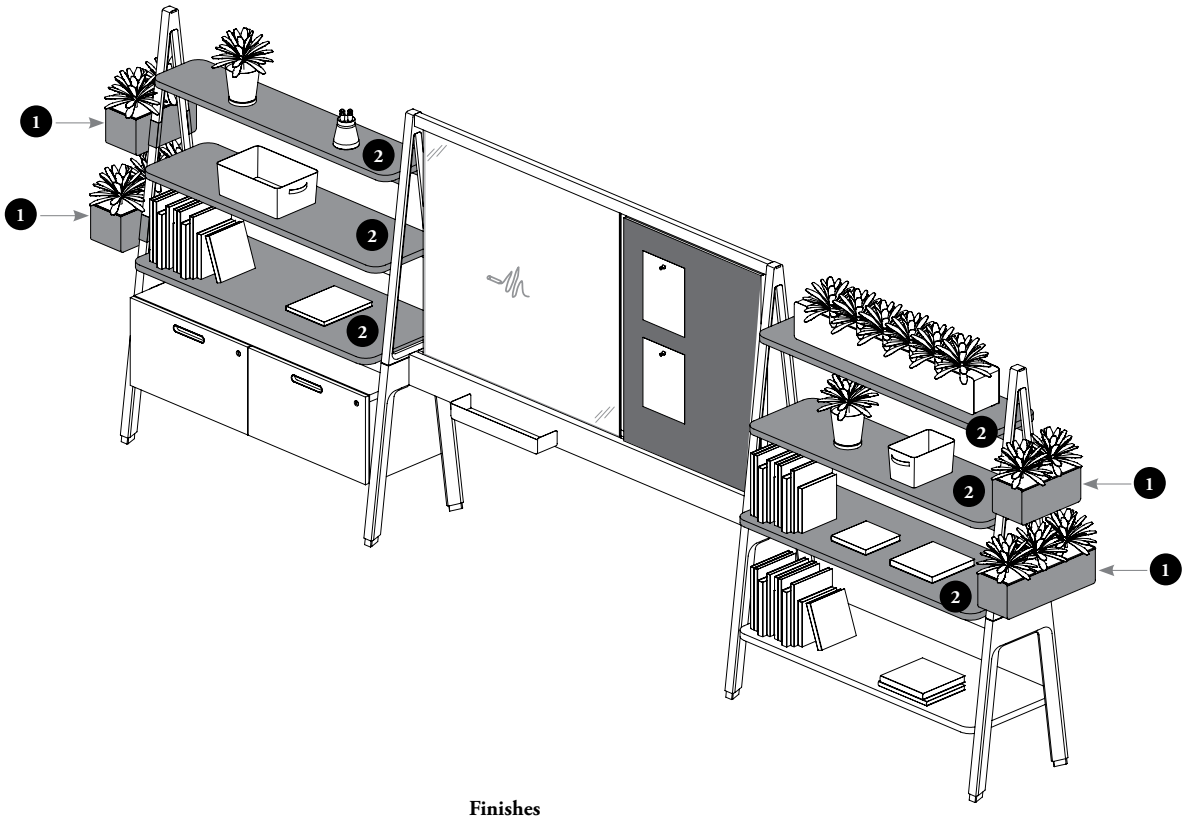

Finishes
Planter Finishes: Foundation, Mica and Accent
Bracket Finishes: Foundation, Mica and Accent (Can be specified with the same color than the EZ Upper A-Frame to make the mounting bracket more discreet)
Planter Liner Finish: Black
Shelf Finish: Source Laminate
Hardware Finishes: Foundation, Mica and Accent

1 planter box kit

The Planter Boxes allow integration of biophilia at the end of the EZ Fence Structure

2 laminate shelves

Provide an open storage space within the workstation or a casual space division between different environments

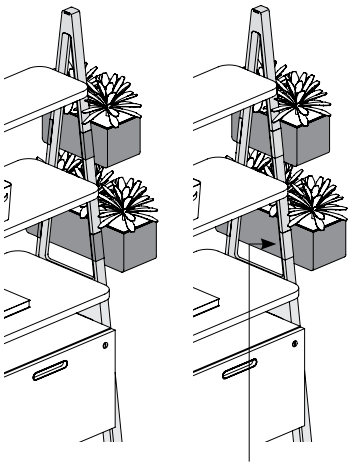

It is recommended to coordinate the brackets with the EZ Upper A-Frame to accentuate the floating look

planter box kit – ez upper A-frame mounted basics

Planter Box Kit is mounted at the end of an EZ Upper A-Frame to add biophilia.

- Can only be mounted on EZ Upper A-Frame – Shared (JZSUD) or EZ Upper A Frame with Shelves on One Side configuration (JZSULSO)
- All dimensions are actuals

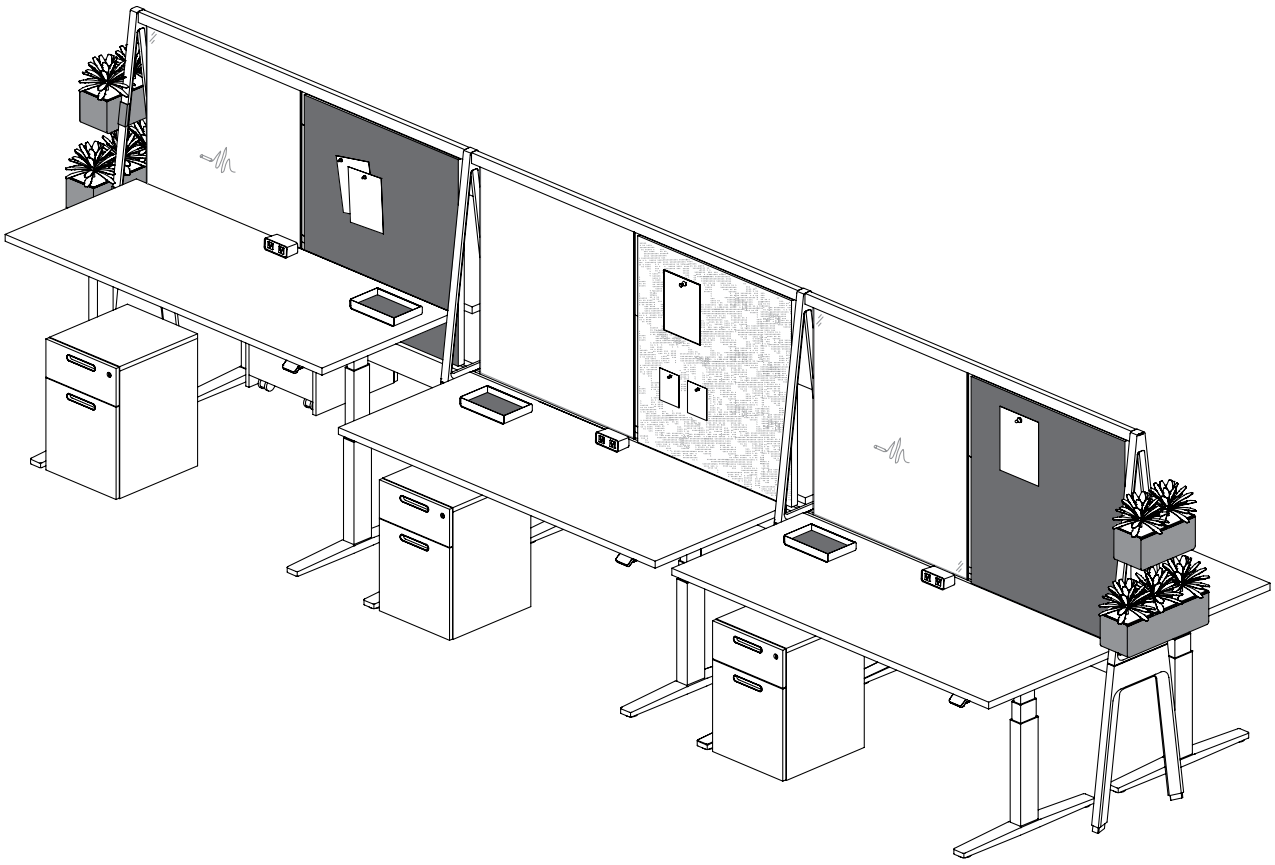

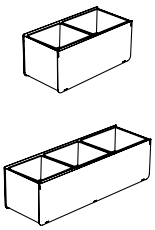

Planter Box Kit – EZ Upper A-Frame Mounted (JZAPU)

- Allow planters integration at the end of Shared EZ Upper A-Frame
- 18" (L) or 28"(S) beam height are available
- Compatible with 56", 57" or 66" EZ Upper A-Frame datum height
- Two Planter Boxes are included:

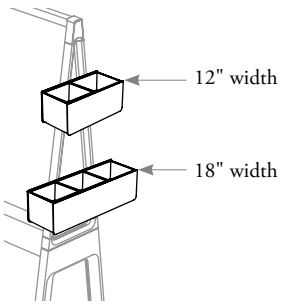

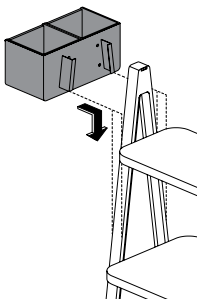

Can be installed by sliding down on the EZ Upper A-Frame

planter box kit – ez upper A-frame mounted basics (continued)

accessory description

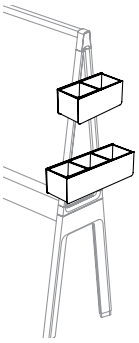

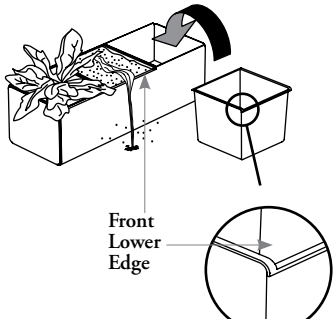

Width	Number of Liners
12" (Upper)	2
18" (Lower)	3

Planter Box Kit

- Allows integration of planters over EZ Upper A-Frame
- Planter Liners are included to protect the metal Planter box by covering all metal edges and to manage exceeding watering in only one direction to reduce water spreading
- Dimensions:

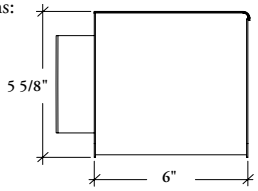

datum heights

The Planter Boxes can be used in combination with two or three Laminate Shelves EZ Upper A-Frame Mounted (JZTBS)

57" Datum Height OR 66" Datum Height

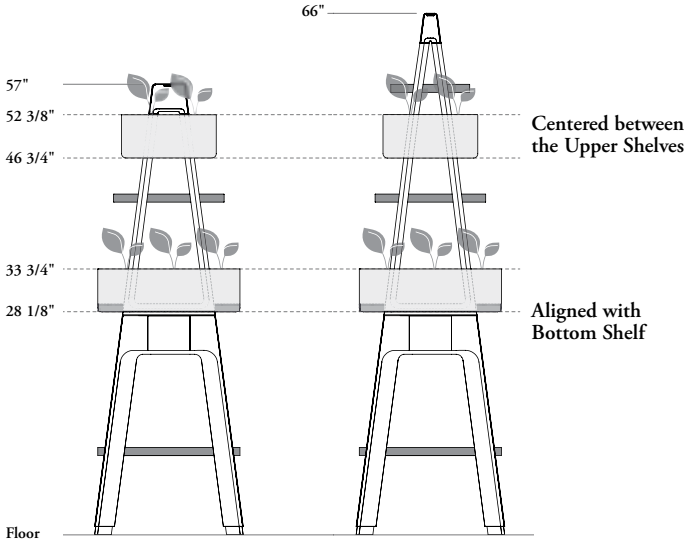

28" Beam Height (Standard Height Fence Applications)

56" Datum Height

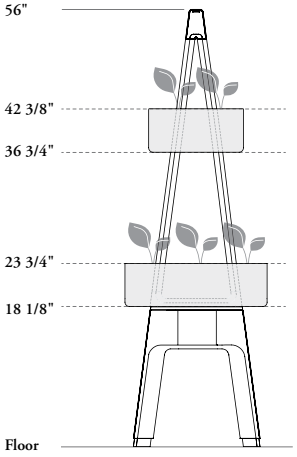

18" Beam Height (Low Height Fence Applications)

planning with planter box kit – ez upper A-frame mounted

The following should be considered when planning with Accessories – EZ Upper A-Frame Mounted.

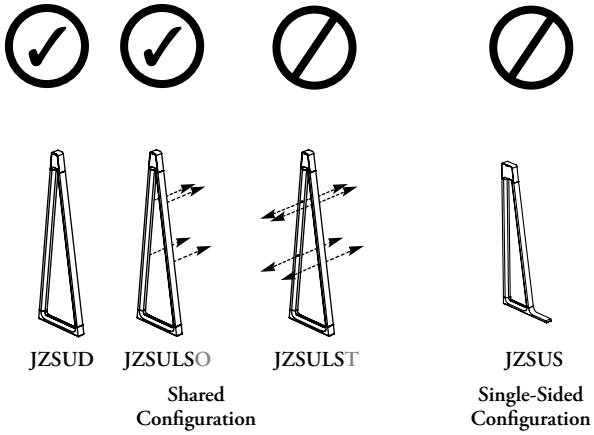

Planter Box Kit Compatibility

Planter Box Kit **cannot** be used on EZ Upper A-Frame – Single-Sided (JZSUS). Only EZ Upper A-Frame – Shared (JZSUD) and EZ Upper A-Frame for Laminate Shelves – Shared (JZSULS) are compatible

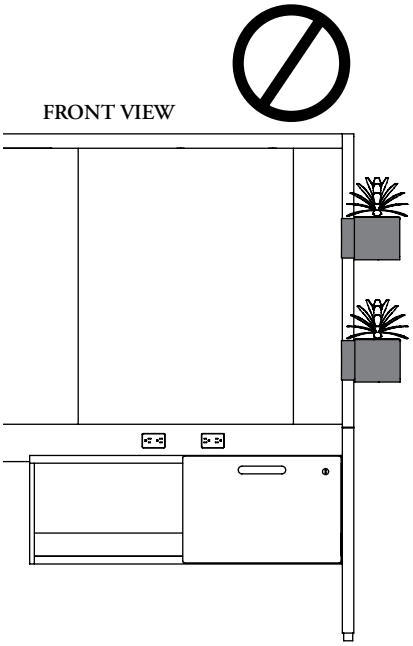

Planter Box Kit **cannot** be specified on a Upper A-Frame right next to a beam with facing side outlets

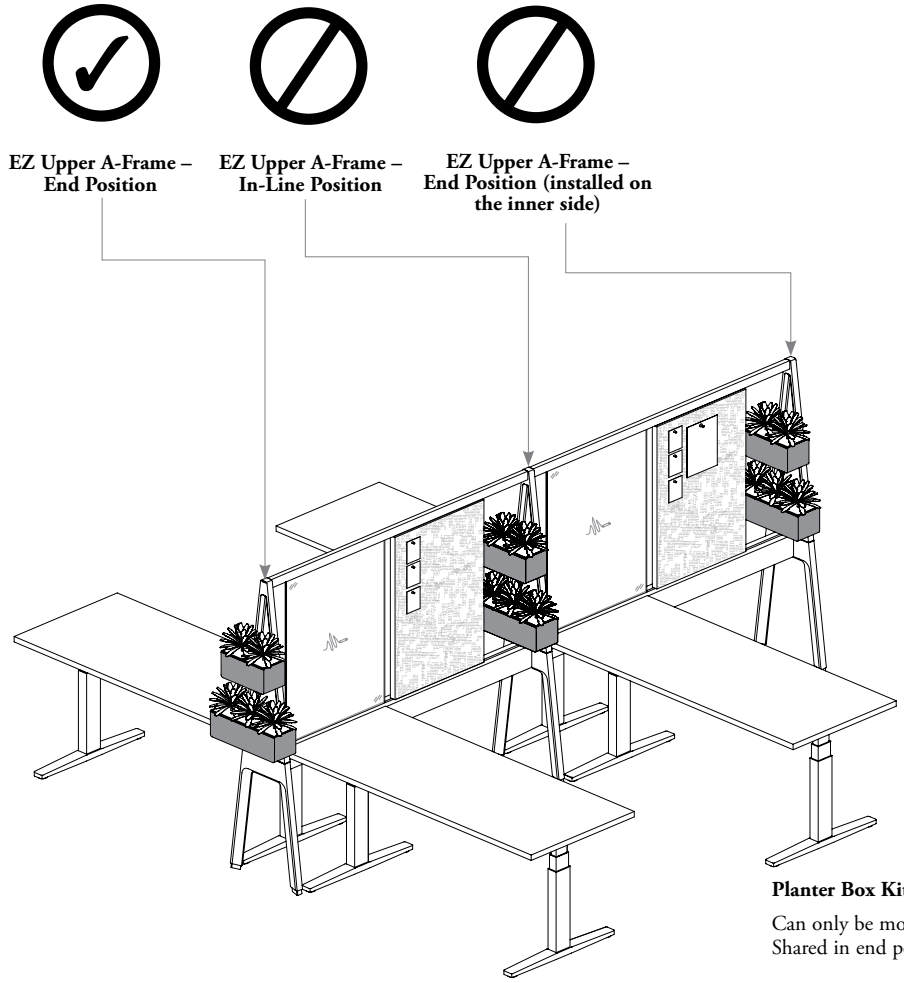

Planter Box Kit Compatibility (continued)

Can only be mounted on the outer side of an EZ Upper A-Frame – Shared in end position

laminate shelves – ez upper A-frame mounted basics

These Laminate Shelves are fixed between EZ Upper A-Frame for Laminate Shelves – Shared to provide casual space division, storage and shelving.

- Only available in Shared applications
- Can only be mounted on EZ Upper A Frame for Laminate Shelves – Shared (JZSULS) with Shelves One Side (O) or with Shelves on Two Sides (T) configuration
- All dimensions are actuals

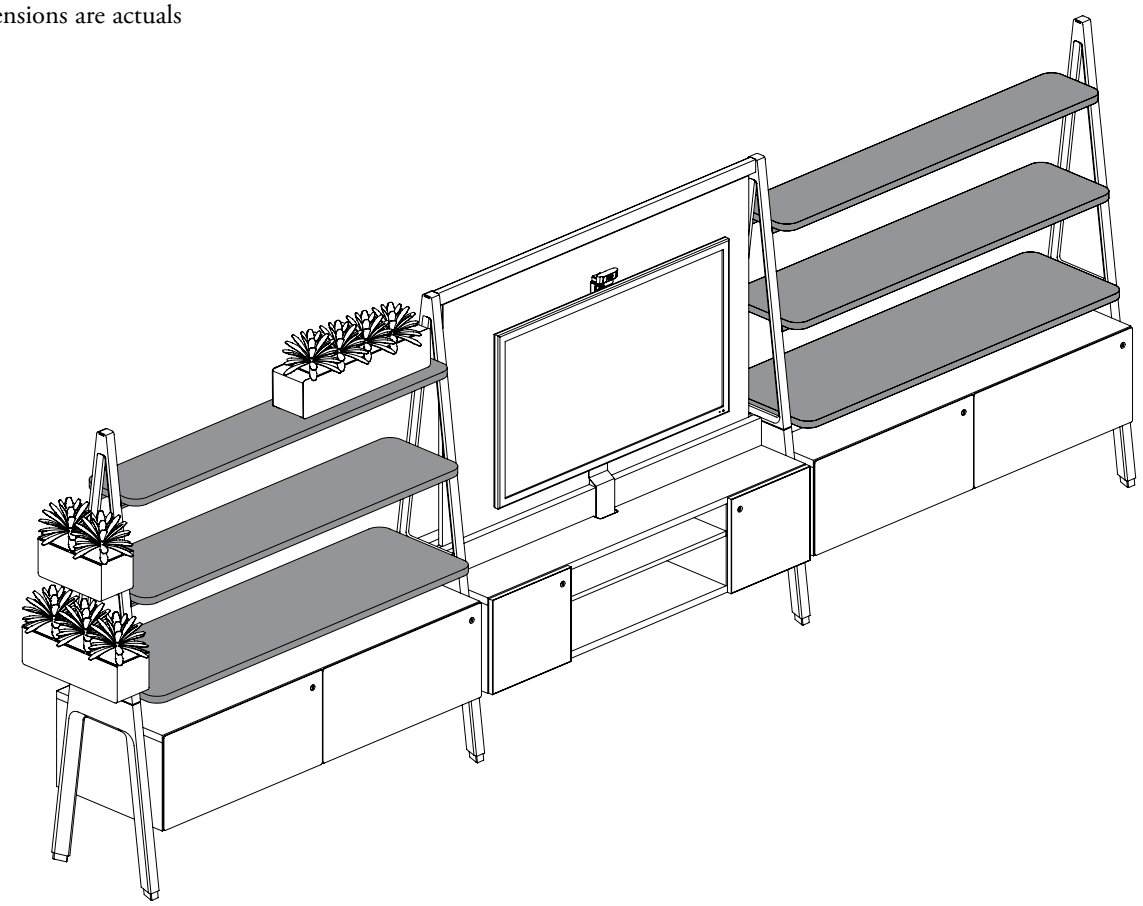

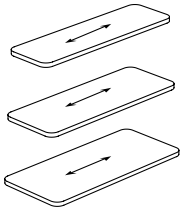

Laminate Shelves – EZ Upper A-Frame Mounted (JZTBS)

- Provide an open storage space within the workstation or a casual space division between different environments
- Only 28" (S) beam height is available
- Widths include 48" – 84" (6" increments)
- Only available with 2" radius corners
- Two Datum Heights are available:

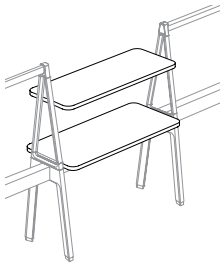

57" datum height comes with Two Shelves

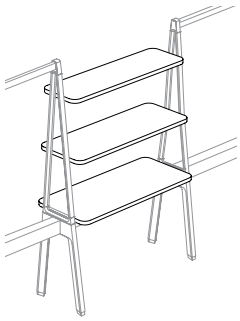

66" datum height comes with Three Shelve

laminate shelves – ez upper A-frame mounted basics (continued)

ez upper a-frames for laminate shelves

- These Laminate Shelves can be installed between EZ Upper A-Frame for Laminate Shelves – Shared (JZSULS) only. These A-Frames are **not** included and can be specified separately. Refer to EZ Fence Structure section for more details
- These two styles, and the standard EZ Upper A-Frame can be mixed on the same layout

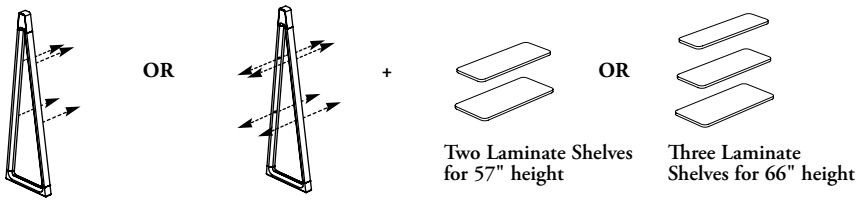

Two Laminate Shelves for 57" height

Three Laminate Shelves for 66" height

Shelves on One Side (O)

Shelves on Two Sides (T)

EZ Upper A-Frame for Laminate Shelves – Shared (JZSULS)

- These EZ Upper A-Frames come with integrated inserts which contribute to support Laminate Shelves with Reinforcing Bars

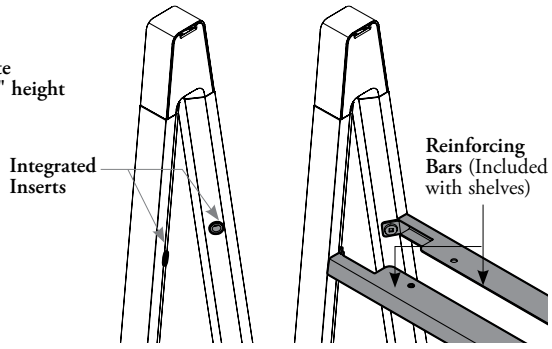

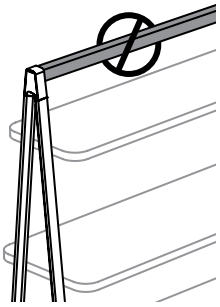

- An EZ Upper Rail for Lift and Drop Tile (JZSUR) **cannot** be specified between two EZ Upper A-Frames for Laminate Shelves on which Laminate Shelves are installed

laminate shelves positions

- The Laminate Shelves can be used in combination with Planter Box Kit – EZ Upper A-Frame Mounted (JZAPU)
- The 14" deep and 18" deep laminate shelves are placed on the same position when mounted on 57" or 66" Datum Height EZ Fence Structure

Accessories Depths and Positions – EZ-Upper A-Frame Mounted

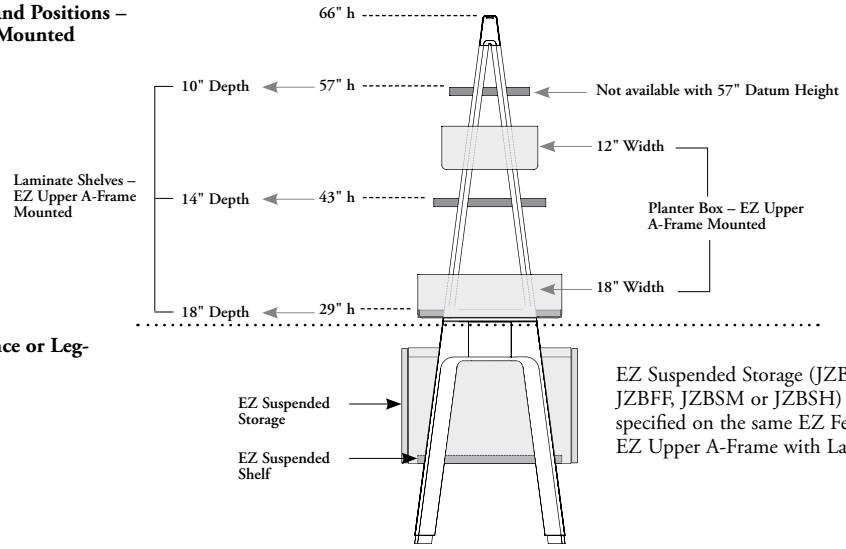

Accessories – EZ Fence or Leg-Mounted

EZ Suspended Storage (JZBSO, JZBDO, JZBFF, JZBSM or JZBSH) can also be specified on the same EZ Fence Beam than EZ Upper A-Frame with Laminate Shelves

planning with laminate shelves – ez upper A-frame mounted

laminate shelves applications

For span and stability restrictions, refer to Planning with EZ Fence Beams and EZ Upper A-Frame on EZ Fence Structure section for more details

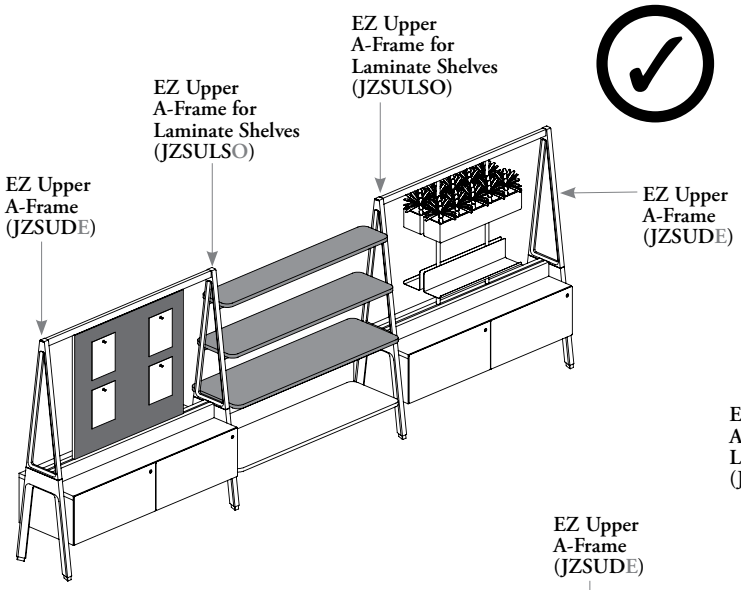

Shared EZ Upper A-Frame and Shared EZ Upper A-Frame for Laminate Shelves

Shared EZ Upper A-Frame can be combined with Shared EZ Upper A-Frame for Laminate Shelves on the same EZ Fence Structure. This structure allows combination of Lift and Drop Tile, Laminate Shelves and Accessories – Lift and Drop Vertical Poles Mounted

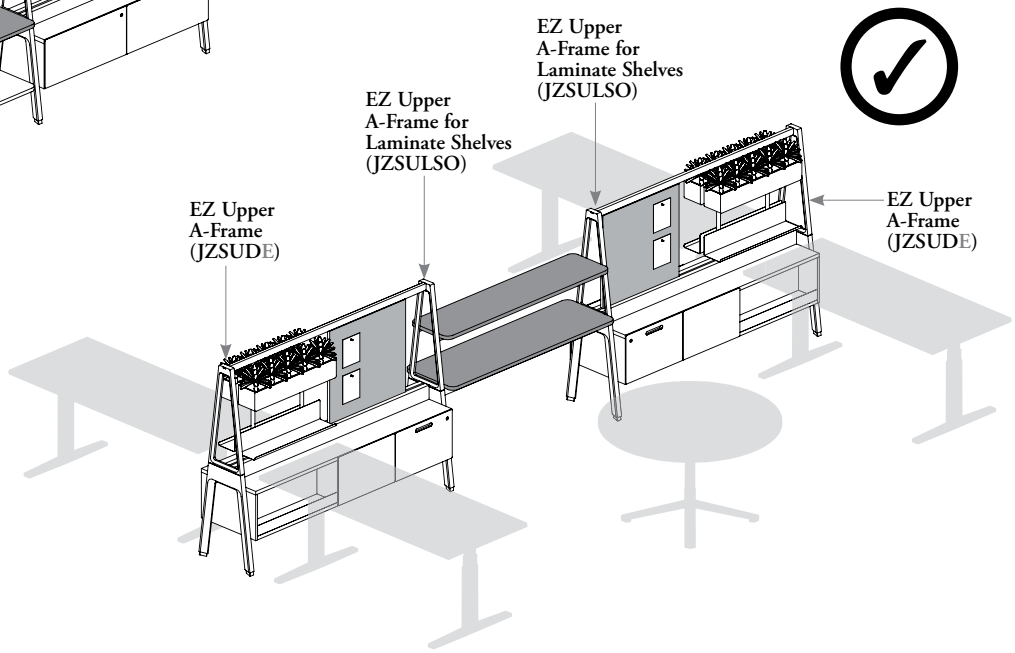

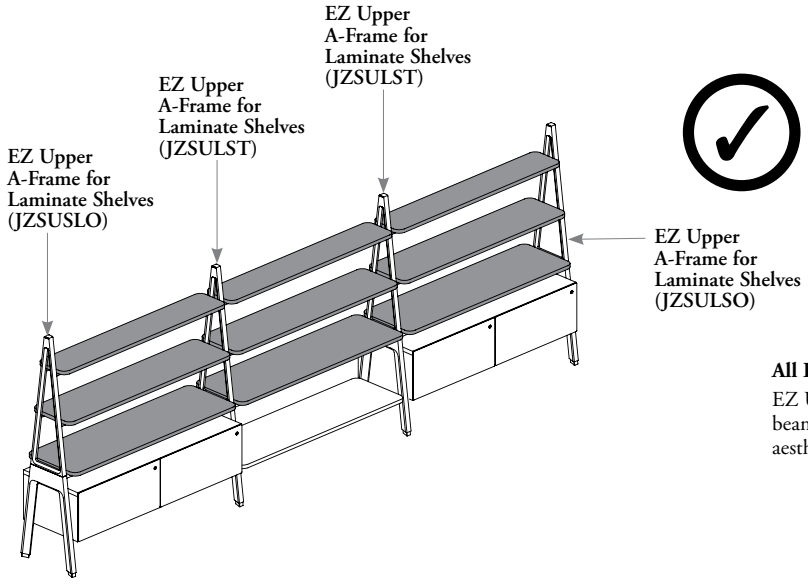

All Laminate Shelves EZ Fence Structure

EZ Upper A-Frames for Laminate Shelves can be specified on every beam of an EZ Fence, to create a freestanding bookcase with Cityline aesthetic

ez fence screens

ez fence screens

UNDERSTANDING EZ FENCE SCREENS 146

ADD-ON SCREEN – EZ FENCE BEAM-MOUNTED BASICS 148

PLANNING WITH ADD-ON SCREENS – EZ FENCE BEAM-MOUNTED . 154

ELEVATED SCREEN – EZ FENCE BEAM-MOUNTED BASICS 155

PLANNING WITH WIDTH EXTENSION FOR CORNER APPLICATIONS – ELEVATED SCREENS – EZ FENCE BEAM-MOUNTED 158

PLANNING WITH ELEVATED SCREENS – EZ FENCE BEAM-MOUNTED 159

MODESTY OR FLOOR SCREEN – EZ FENCE BEAM-MOUNTED BASICS 161

PLANNING WITH WIDTH EXTENSION FOR CORNER APPLICATIONS – MODESTY OR FLOOR SCREENS – EZ FENCE BEAM-MOUNTED 167

PLANNING WITH MODESTY OR FLOOR SCREENS – EZ FENCE BEAM-MOUNTED 168

FLOOR SCREEN – EZ FENCE POST-MOUNTED BASICS 171

PLANNING WITH WIDTH REDUCTION FOR FLOOR SCREENS – EZ FENCE POST-MOUNTED 174

PLANNING WITH FLOOR SCREENS – EZ FENCE POST-MOUNTED . . 175

ez fence screens (continued)

FLOOR SCREEN WITH METAL TOWERS – EZ FENCE POST-MOUNTED BASICS 176

PLANNING WITH WIDTH REDUCTION FOR FLOOR SCREEN WITH METAL TOWERS – EZ FENCE POST-MOUNTED 179

PLANNING WITH FLOOR SCREEN WITH METAL TOWERS – EZ FENCE POST-MOUNTED 180

DRAWER WIDTHS & LOCK CHART – FLOOR SCREEN WITH METAL TOWERS – EZ FENCE POST-MOUNTED 182

understanding ez fence screens

Expansion Cityline offers a variety of EZ Fence Screens for space division. They provide user visual and territorial privacy and a lighter aesthetic for both divisional and complementary applications.

EZ compatible Screens in this section are all compatible with EZ Fence Structure only

- Two mounting styles are available:
  – EZ Fence Beam-Mounted
  – EZ Post-Mounted
- Alignment of two contiguous screens is enhanced by different devices for Laminate and Fabric screen materials. Expansion Cityline also allow mixing screen styles and materials. However, alignment of consecutive screens can only be done within same screen height, style and material

ez fence beam-mounted style

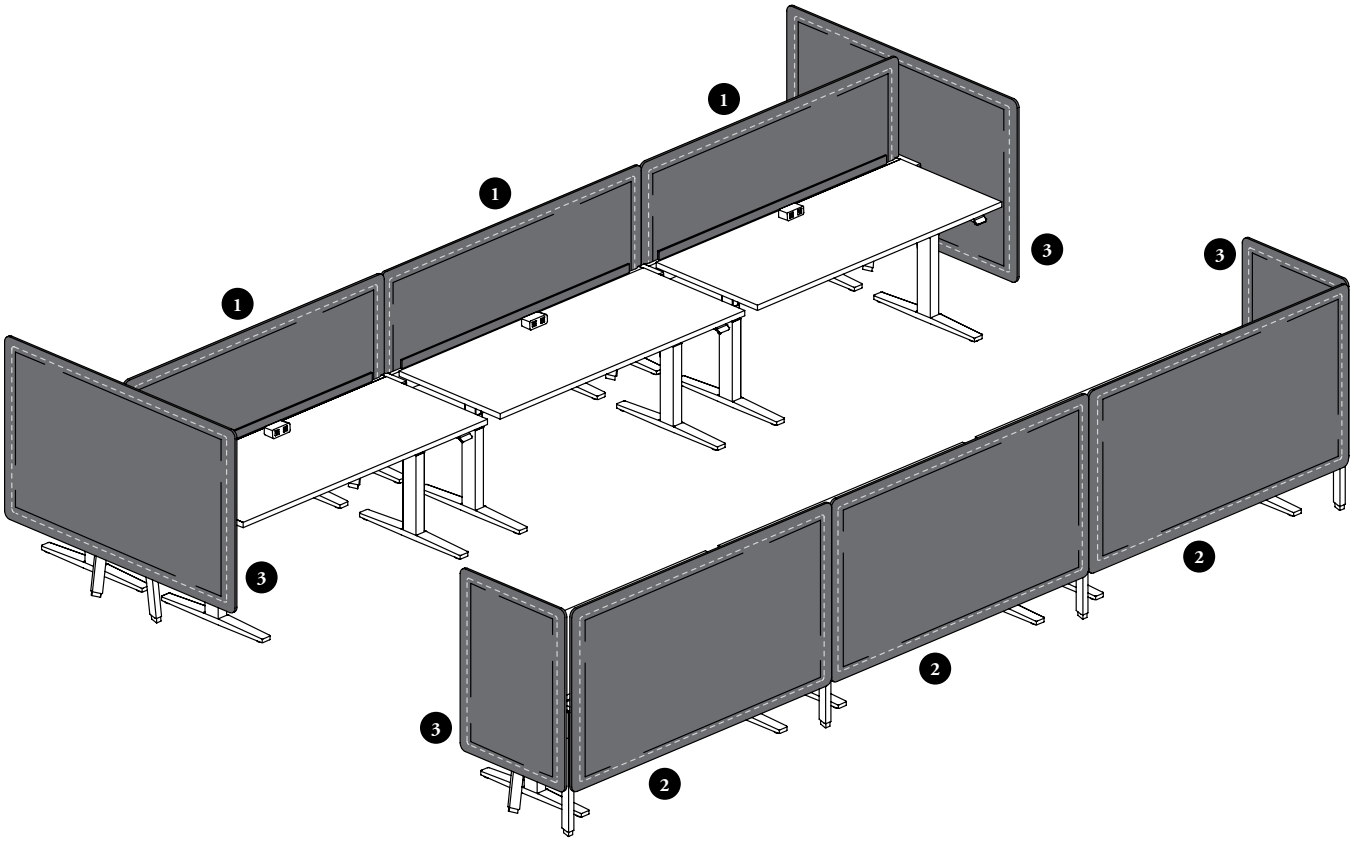

Four main applications:

1. **Add-On Screens –** Create seated privacy and space division above EZ Fence Beams (JZSBB or JZSCB) – Solid, Glass, Infinity (Fabric), Fabric, Smooth Felt or Felt finishes
2. **Elevated Screens –** Create privacy and physical separation between workstations or corridor when overlaid on EZ Fence Beam for Corridor (JZSBS or JZSCS) – Solid, Fabric or Felt finishes

   Modesty Screens – Create seated privacy and, specified with foot, can act as stabilizer when mounted on an EZ Fence Beam for Corridor (JZSBS or JZSCS) – Solid finish

   Floor Screens – Provide privacy from floor level when mounted to EZ Fence Beam for Corridor (JZSBS or JZSCS) – Solid screen with or without Glass finishes
3. **Elevated Screens – Leg-Mounted –** EZ Fence Structure and Desk Structure all used the same Leg-Mounted Screens offering. Refer to Leg-Mounted Screens section for more details

understanding ez fence screens (continued)

EZ compatible All EZ Post-Mounted Screens in this section are compatible with EZ Fence Structure only.

ez post-mounted style

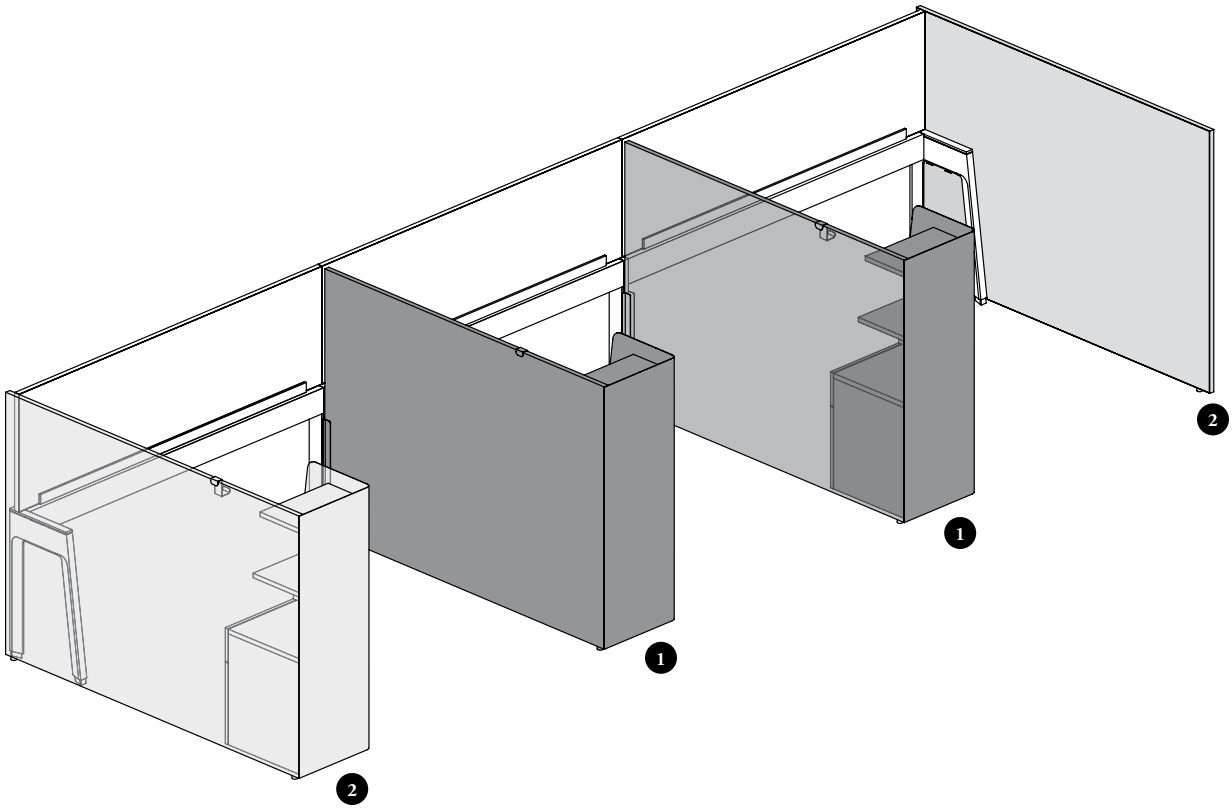

Two main applications:

Floor Screens – Create perpendicular space division from floor level when mounted to EZ Fence Post (JZSPS) – Solid screen with or without Glass finishes

1. **Floor Screens with Metal Towers–** Provide open and storage tower area when attached EZ Fence Post (JZSPS) – Solid with Metal Tower finishes
2. Since Post-Mounted Screens are only available in In-Line position, **Leg-Mounted Screens** can be used at the end of the EZ Fence for a consistent look. Refer to Leg-Mounted Screens for more details

add-on screen – ez fence beam-mounted basics

Add-On Screens – EZ Fence Beam-Mounted can be installed onto a EZ Fence Beam. Theses screens provide visual and territorial privacy.

- The sizing on the Add-On Screen – EZ Fence Beam-Mounted is made accordly to match the dimensions of the EZ Fence Structure
- When applicable, 42", 51" or 57" Datum Height are available. Some restrictions may apply depending on the finish choose and the starting height
- Starting height depends on the height of the EZ Fence Structure
- Can be specified 28" Standard Height (C) or 18" Low Height (L) on EZ Fence Beam (JZSBB) or Chicago EZ Fence Beam (JZSCB) with EZ Add-On Screen configuration (S)

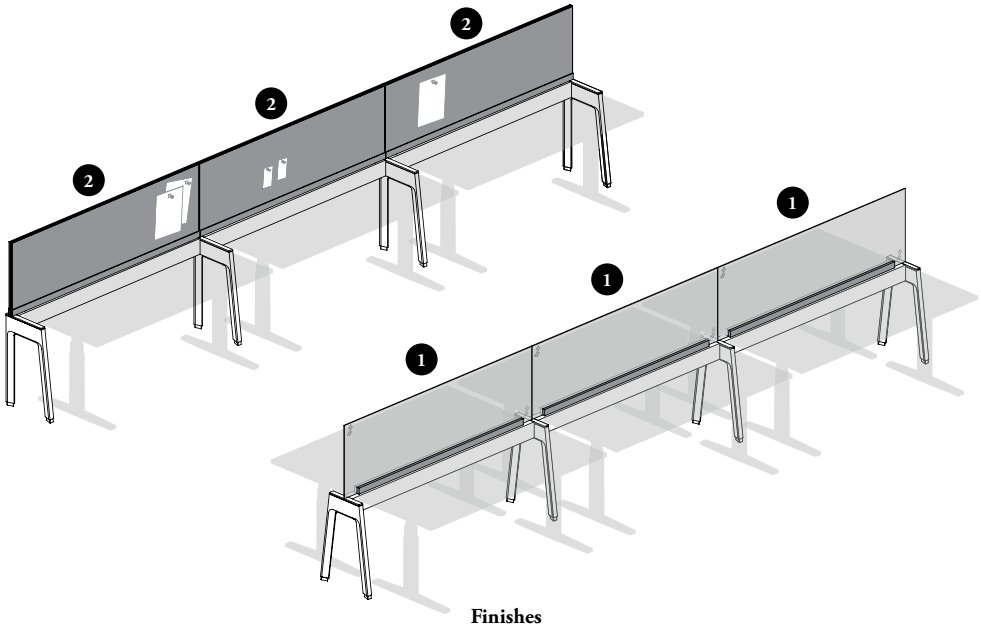

Finishes

Cover & Frame (if applicable): Foundation, Mica and Accent
Solid Finishes: Source Laminate
Glass Finishes: Clear (CL), Frost (FT), Satin (FB), Clear – Low Iron (LA)* or Frost – Low Iron (LB)*
* Low Iron Glass Finishes reduce the greenish render of standard glass
Infinity (Fabric) & Fabric Finishes: Teknion Standard Panel Fabrics. Two-sided finished products have same finish on both sides
Felt Finishes: Smooth** **or** Loft colors. Two-sided finished products have same finish on both sides
** Only avalaible with Smooth Felt Add-On Screen
Stitches Finishes: Carbon Coordinate (C), Shale Coordinate (E), Carrara Coordinate (G) or Umber Coordinate (M)

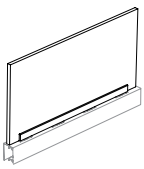

Solid Add-On Screen – EZ Fence Beam-Mounted (JZSASB)

- Provide solid space division, visual privacy and support for complementary screens
- Available 1" thick and two-sided finished
- Widths include 48" – 84" (6" increments)
- Two Configurations are available:
  – End (E)
  – In-Line (I)
- Standard (S) or Radius (with End Configuration (E) only) (R) Corner Details
- Screen ends can be specified With (W) or Without (N) Alignment Holes to allow installation of Linking Devices
- Grain direction on Solid Add-On Screen is horizontal

add-on screen – ez fence beam-mounted basics (continued)

1

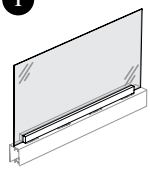

Glass Add-On Screen – EZ Fence Beam-Mounted (JZSAGB)

- Provide glass space division
- Available with a 1/4" (6 mm) thick tempered glass
- Widths include 48" – 84" (6" increments)
- Three Configurations are available:
  - End – Left (L)
  - In-Line (I)
  - End – Right (R)
- Standard (S) or Radius (with End – Left or Right Configuration (L or R) only) (R) Corner Details

- Following products provide fabric or felt space division, visual privacy and noise reduction control
- Are tackable on both sides

2

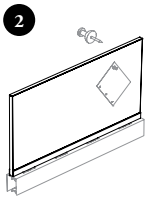

Fabric Add-On Screen – EZ Fence Beam-Mounted (JZSAFB)

- Widths include 48" – 84" (6" increments)
- Two Configurations are available:
  - End (E)
  - In-Line (I)
- Comes with Standard (S) Corner Details only

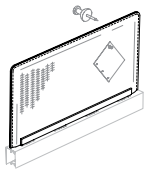

Felt Add-On Screen – EZ Fence Beam-Mounted (JZSAEB)

- Widths include 48" – 84" (6" increments)
- Two Configurations are available:
  - End (E)
  - In-Line (I)
- Come with Radius Corner Details (R) only

- Following products provide infinity (fabric) or smooth felt space division and visual privacy
- Are **not** tackable

Infinity Add-On Screen – EZ Fence Beam-Mounted (JZSAXB)

- Widths include 48" – 84" (6" increments)
- Two Configurations are available:
  - End (E)
  - In-Line (I)
- Comes with Radius (R) Corner Details only

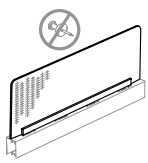

Smooth Felt Add-On Screen – EZ Fence Beam-Mounted (JZSAZB)

- Only available in 42" Datum Height
- Widths include 48" – 84" (6" increments)
- Two Configurations are available:
  - End (E)
  - In-Line (I)
- Come with Radius Corner Details (R) only

add-on screen – ez fence beam-mounted basics (continued)

datum heights & alignment

- Alignment of two contiguous screens is enhanced by different devices for Solid, Fabric and Glass screen materials
- Are **not** required but ensure a better alignment
- Screens must have the same height and finish style to use Linking Devices
- Can be linked in 180° connections only
- Three Linking Devices styles are available:

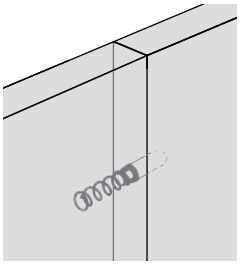

Linking Device for Solid Screens

Always included with Add-On Screens, when Alignment Hole option is specified

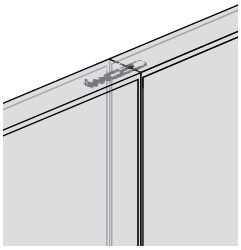

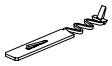

Linking Strip for Fabric Screens

Always come with linking devices which can be used or not at installation

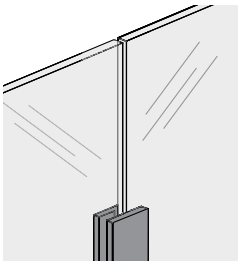

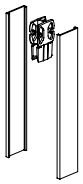

Linking Strip for Glass Screens (JNSLS)

Not included with Glass Add-On Screens and can be specified separately. Refer to Workstation Screen section for more details

configurations vs alignment hole positions

The Alignment Holes option must be specified on Solid Add-On Screens EZ Fence Beam-Mounted to allow the installation of the linking devices

FRONT VIEW

End Configuration (E)

Solid Add-On Screen – End Configuration (E) with Alignment Holes (W), comes with one alignment hole on one upper corner to avoid visible unused hole

When specified with Radius Corner Details (R), the alignment hole will be on the opposite corner

In-Line Configuration (I)

Solid Add-On Screen – In-Line Configuration (I) with Alignment Holes (W), comes with one alignment hole on each upper corners

add-on screen – ez fence beam-mounted basics (continued)

datum heights & alignment (continued)

- The Glass Add-On Screen – EZ Fence Beam-Mounted (JZSAGB) mounted will match the glass section of the Floor Screen with Glass
  - For a better match with Glass Add-On Screen, the following products should be specified with 28" Glass Starting Height:
    - Floor Screen with Glass – One or Two Users – Leg-Mounted (JNSFGO or JNSFGT)
    - Floor Screen with Glass – EZ Post-Mounted (JZSFGP)

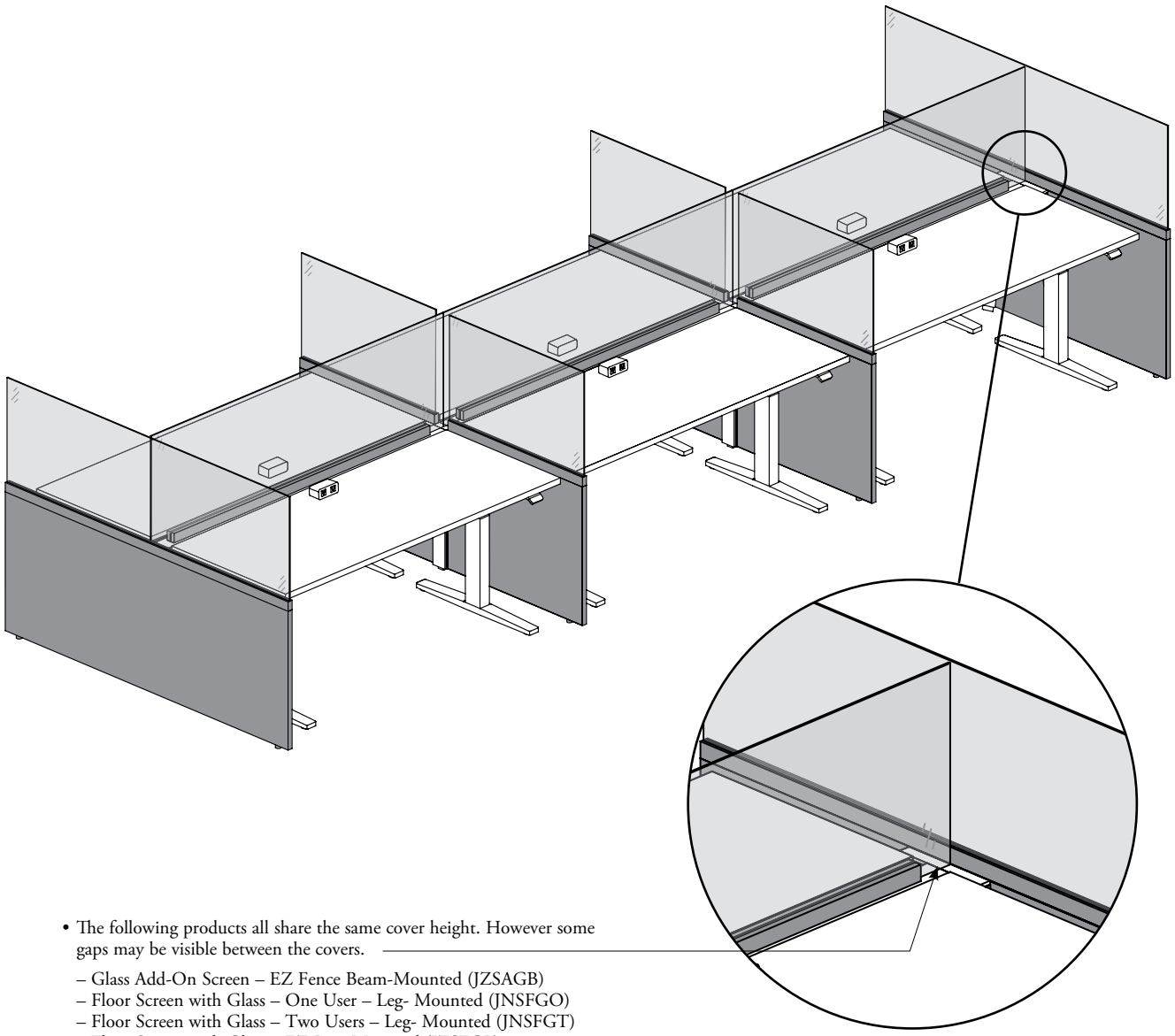

- The following products all share the same cover height. However some gaps may be visible between the covers.
  - Glass Add-On Screen – EZ Fence Beam-Mounted (JZSAGB)
  - Floor Screen with Glass – One User – Leg- Mounted (JNSFGO)
  - Floor Screen with Glass – Two Users – Leg- Mounted (JNSFGT)
  - Floor Screen with Glass – EZ Post-Mounted (JZSFGP)

add-on screen – ez fence beam-mounted basics (continued)

corner details

• Two Corner Details are available:

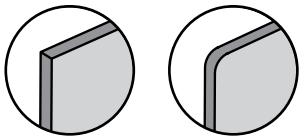

Standard (S) **Radius (R)**

• The two Corner Details are **not** available with all Add-On Screen styles, see previous page for more details

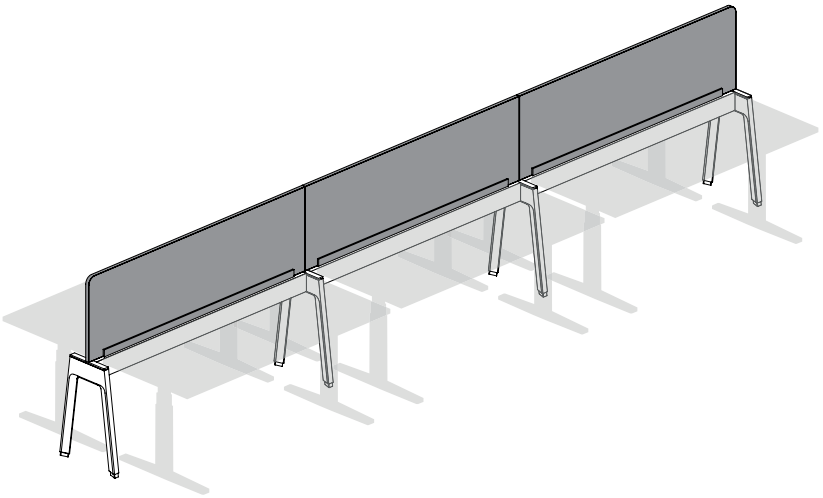

Solid or Glass Add-On Screens
Can be specified Standard (S) or Radius (R). Only end screen configuration can have radius corner

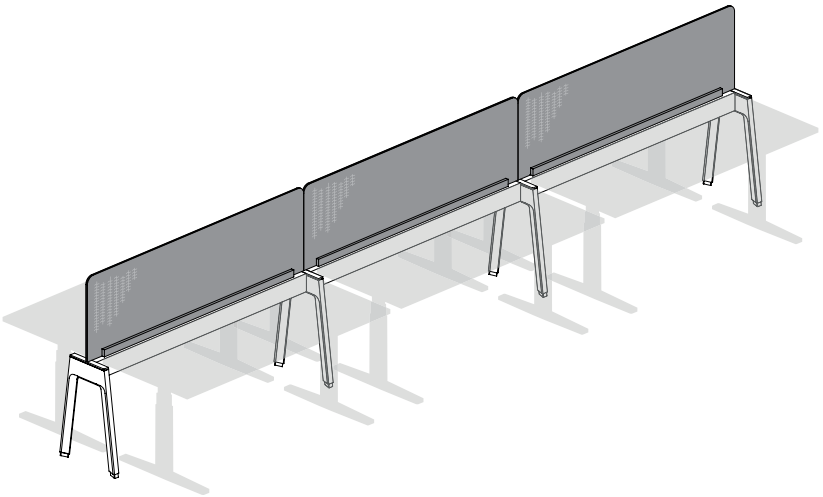

Infinity, Smooth Felt and Felt Add-On Screens
Can only be specified Radius (R). Radius corner are on each side of all screens

add-on screen – ez fence beam-mounted basics (continued)

end and in-line configurations

- Add-On Screen configuration must be specified according to its position on the EZ Fence Beam
- Two Configurations are available:
  - End (E)
  - In-Line (I)
- End (E) and In-Line (I) Configurations have dedicated widths to match application requirements

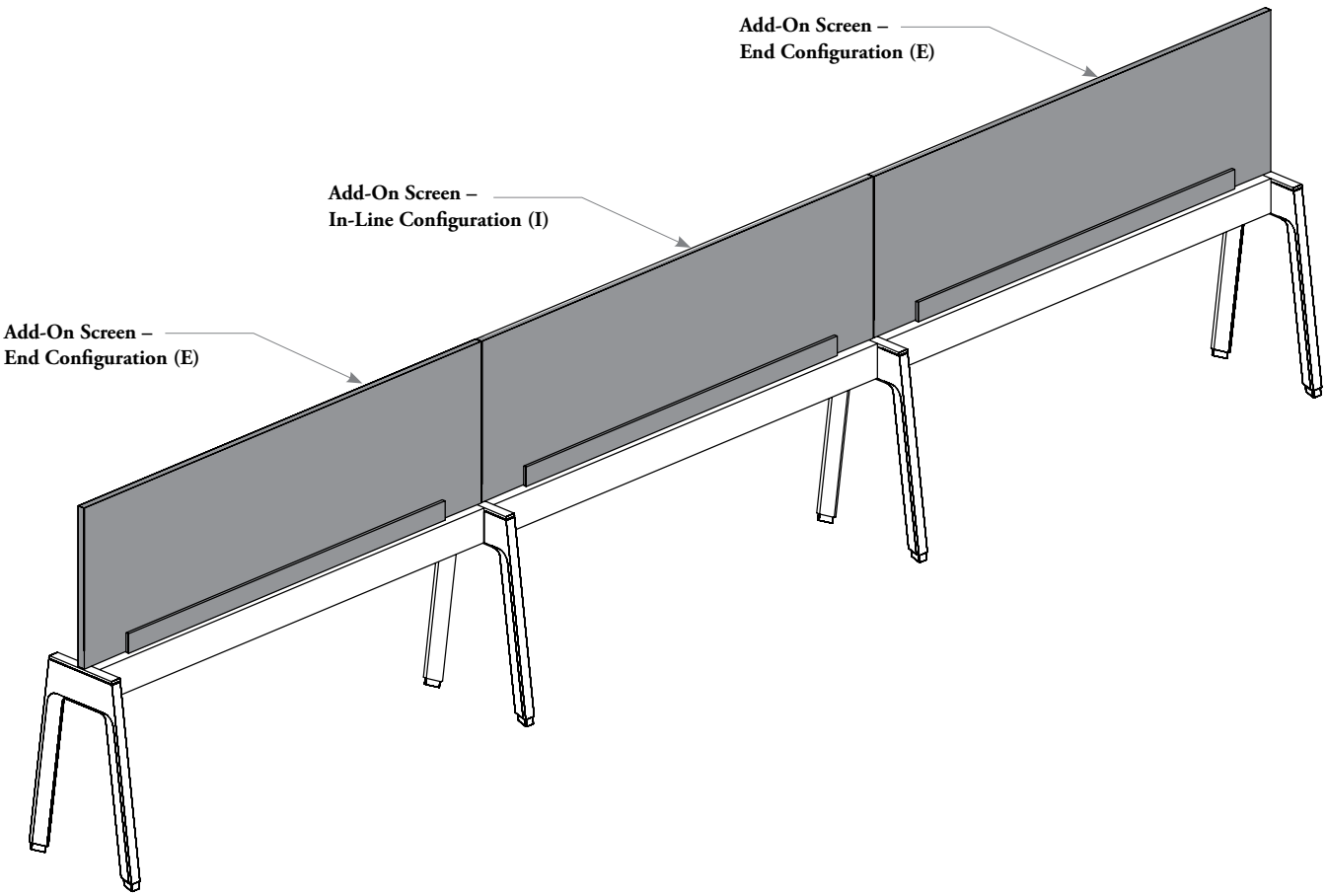

planning with add-on screens – ez fence beam-mounted

Add-On Screens – EZ Fence Beam-Mounted are installed EZ Fence Beams to provide central space division and privacy. The following should be considered when planning with Add-On Screens – EZ Fence Beam-Mounted.

- Are available in various heights to provide different levels of privacy
- Can be used in linear planning only.
- Only on-module applications are allowed
- Can be used in Shared or Single-Sided EZ Fence applications

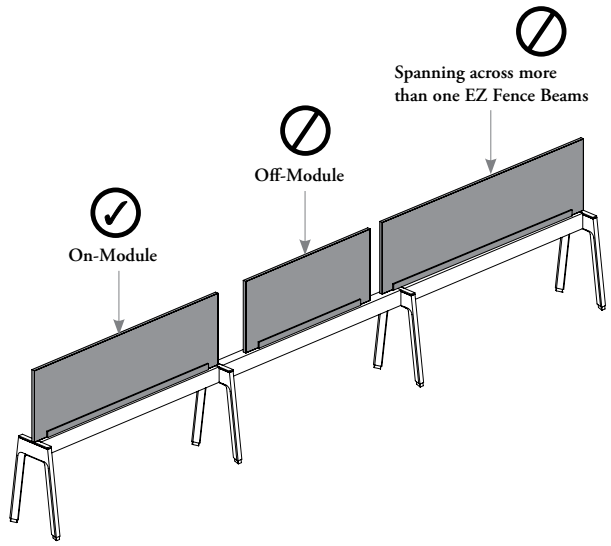

All Add-On Screens – EZ Fence Beam-Mounted must be specified the same width than the EZ Fence Beam on which it is mounted

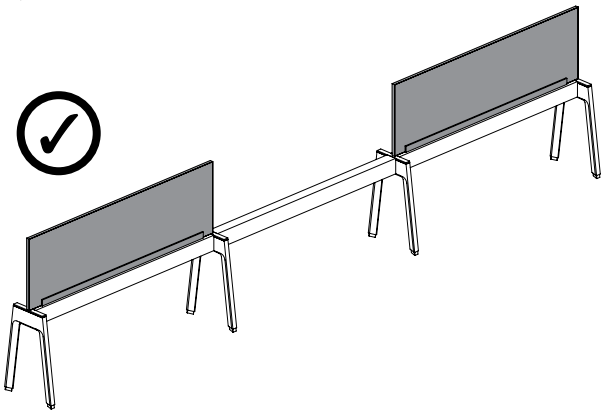

EZ Beams with and without Add-On Screens can be mixed in the same fence layout. EZ Beam with screen must be specified EZ Add-On Screen (S) and those without must be specified No Screen (N)

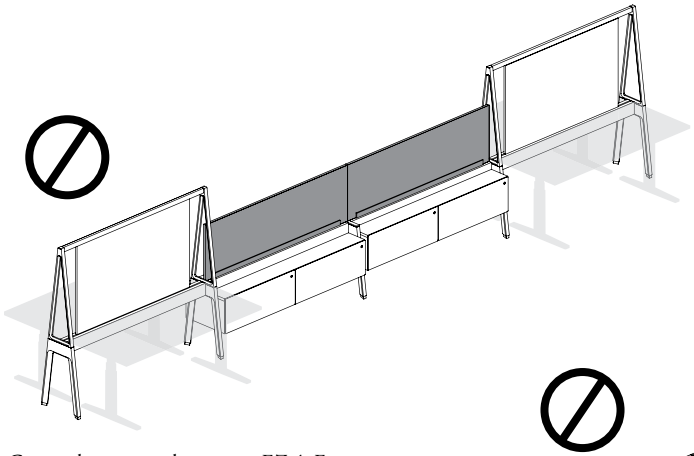

Cannot be mounted next to a EZ A-Frame

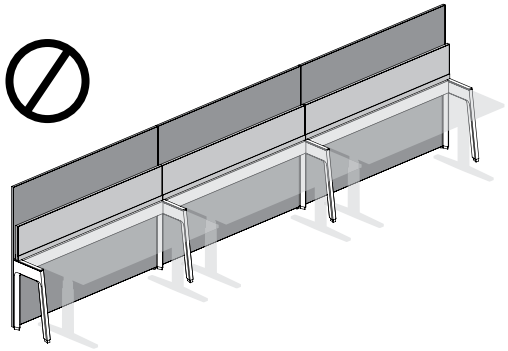

In Single-Sided Configuration it is **not** possible to use EZ Floor Screen or EZ Elevated Screen and EZ Add-On Screen at the the same time. There is no EZ Fence Beam (JZSBB) configuration that can allow that

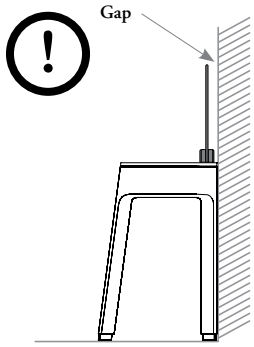

Beam-Mounted Add-On Screens are always centered on the beam. Therefore when a Single-Sided EZ Fence is against a wall, a minimal gap is created. The size of that gap depends on the material thickness used for the screen

elevated screens – ez fence beam-mounted basics

The Elevated Screens – EZ Fence Beam-Mounted create privacy and physical separation between workstations or corridor when overlaid on EZ Fence Beam.

- The sizing on the Elevated Screen – EZ Fence Beam-Mounted is made accordly to match the dimensions of the EZ Fence Structure
- When applicable, 42", 51" or 57" Datum Height are available. Some restrictions may apply depending on the finish choose and the starting height
- Only available with 10" modesty base height
- Mount on-module on the back side of EZ Fence Beam for Corridor (JZSBS) or Chicago EZ Fence Beam for Corridor (JZSCS) only

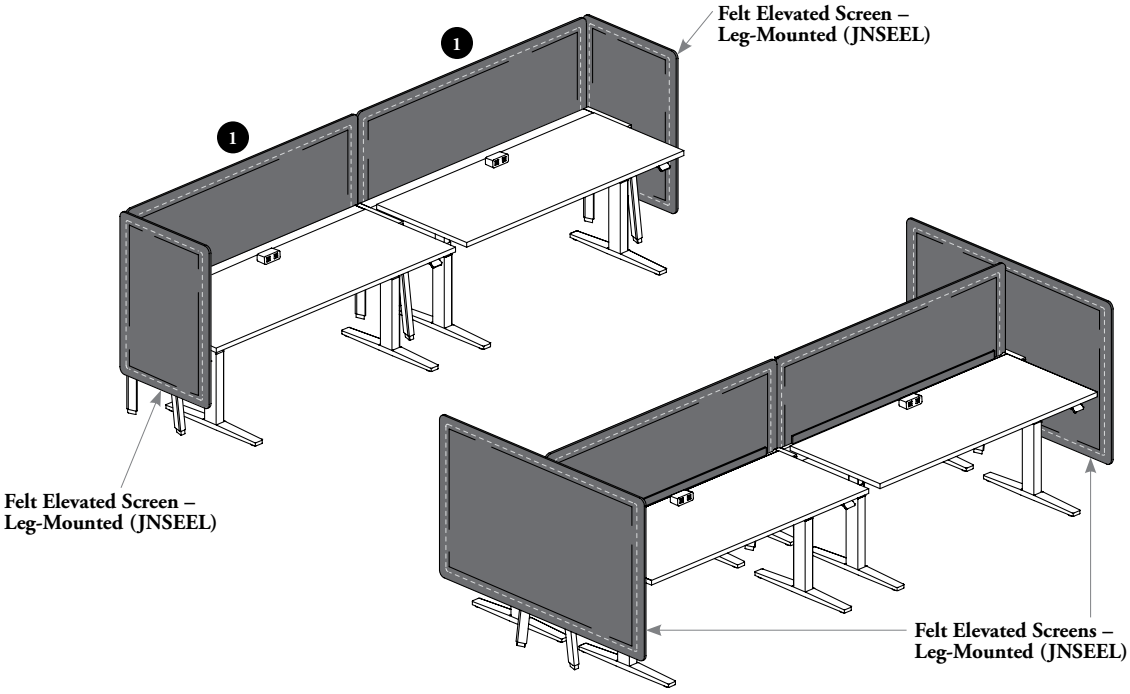

Finishes

Frame (If applicable): Foundation, Mica, Accent
Solid Finishes: Source Laminate
Fabric Finishes: Teknion Standard Panel Fabrics, specified separately for inner and outer sides
Felt Finishes: Loft colors. Two-sided finished products have the same finish on both sides
Stitches Finishes: Carbon Coordinate (C), Shale Coordinate (E), Carrara Coordinate (G) or Umber Coordinate (M)

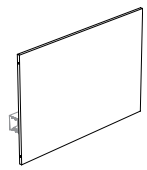

Solid Elevated Screen – EZ Fence Beam-Mounted (JZSESB)

- Available 1" thick and two-sided finished
- Widths include 48" – 84" (6" increments)
- Comes with Standard Corner Details (S) only
- Three Configurations are available:
  - In-Line (I)
  - End – Left (L)
  - End – Right (R)
- Screen ends can be specified With (W) or Without (N) Alignment Holes to allow installation of Linking Devices

grain direction

- Always runs horizontal
- The grain direction on Laminate Solid Screens is **not** directional. It may appear in different directions on side-by-side screens

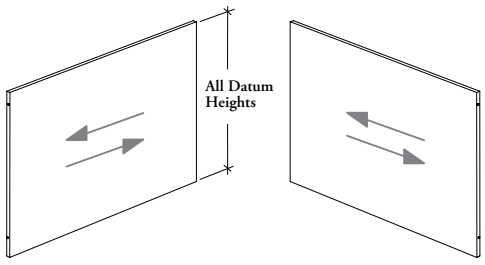

elevated screen – ez fence beam-mounted basics (continued)

- Following products provide fabric or felt space division, visual privacy and noise reduction control
- Are tackable on both sides

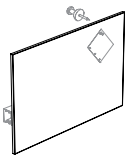

Fabric Elevated Screen – EZ Fence Beam-Mounted (JZSEFB)

- Inner and outer finishes are specified separately
- Widths include 48" – 84" (6" increments)
- Comes with Standard Corner Details only
- Three Configurations are available:
  - In-Line (I)
  - End – Left (L)
  - End – Right (R)

1

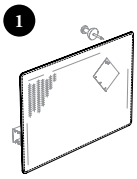

Felt Elevated Screen – Ez Fence Beam-Mounted (JZSEEB)

- Felt Finish is the same on both sides
- Widths include 24" – 84" (6" increments)
- Come with Radius Corner Details (R) only
- Three Configurations are available:
  - In-Line (I)
  - End – Left (L)
  - End – Right (R)

datum heights & alignment

- Alignment of two contiguous screens is enhanced by different devices for Solid or Fabric screen materials
- The Alignment Holes option must be optional and is recommended on Solid Screens to allow the installation of linking devices. Caps are supplied for unused holes
- Screens must have the same height and finish style to use Linking Devices
- Can be used to link EZ Fence Beam-Mounted Elevated Screens together or in 90° application to connect to an Elevated Screen – Leg-Mounted. Refer on Modesty & Floor Screens – EZ Fence Beam-Mounted Connections on page 164 for more details
- Two Linking Devices styles are available:

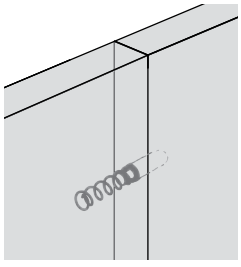

Linking Device for Solid Screens

Always included with Elevated Screens, when Alignment Hole option is specified

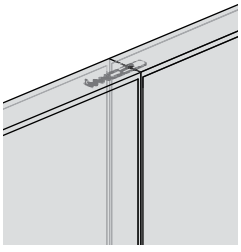

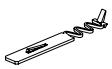

Linking Strip for Fabric Screens

Always come with linking devices which can be used or not at installation

elevated screen – ez fence beam-mounted basics (continued)

base height

- Elevated screens start at 10" above floor
- Elevated screens do **not** allow routing wires between screen and the EZ Fence Structure
- The bottom of the Elevated Screens aligns with all Beam-Mounted Storage (Suspended or Semi-Suspended Credenzas) and EZ Suspended Storage:

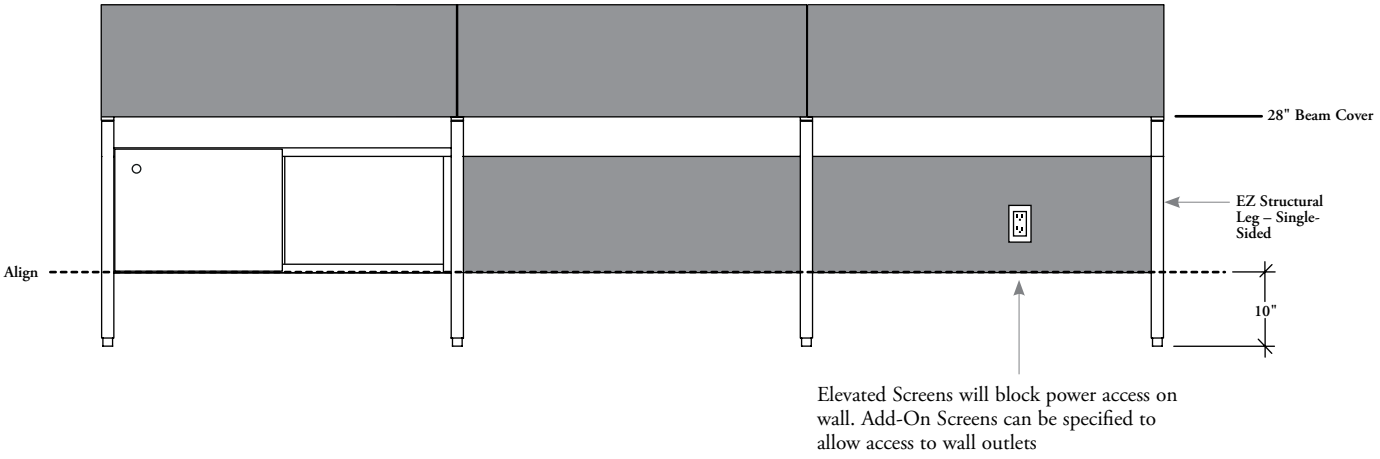

end and in-line configurations

- Elevated Screen configuration must be specified according to its position on the EZ Fence Beam
- Three Configurations are available:
  - In-Line (I)
  - End – Left (L)
  - End – Right (R)
- End (E) and In-Line (I) Configurations have dedicated widths to match application requirements

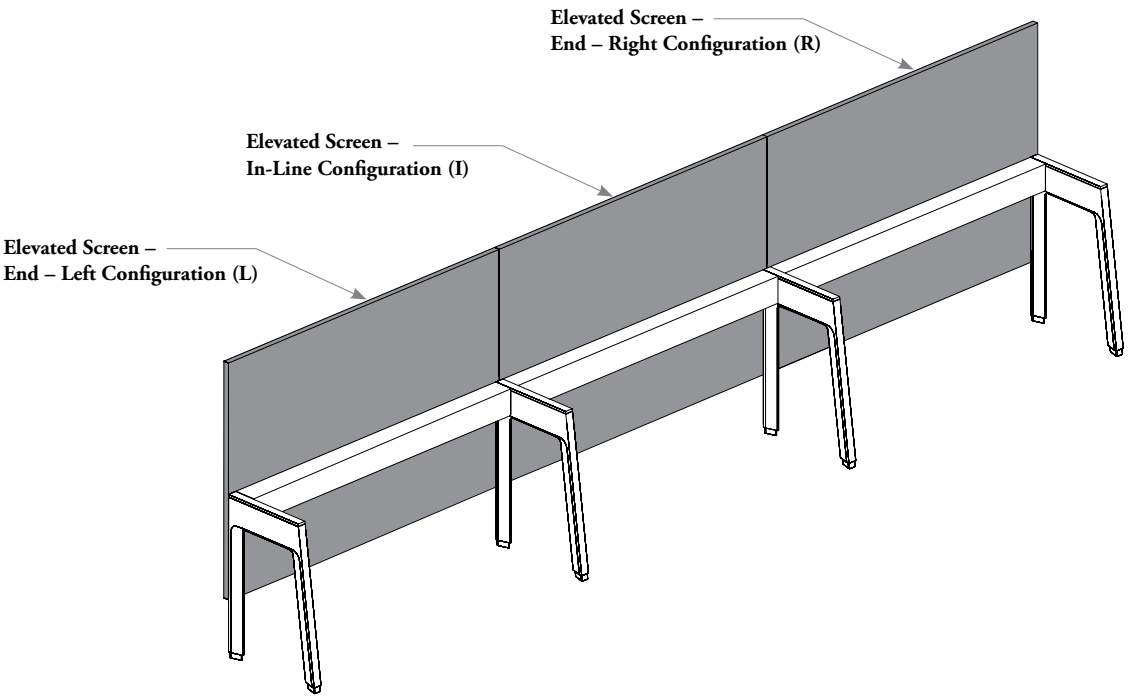

planning with width extension for corner applications – elevated screen – ez fence beam-mounted

The following should considered when planning with Elevated Screens – EZ Fence Beam-Mounted.

- Width extension for each material is related to its thickness and differ from one another
- Appropriate specification of this option will allow **closing 90° corners made with screens of same material**
- Width extension are **not** offered on a Felt Elevated Screens

TOP VIEWS

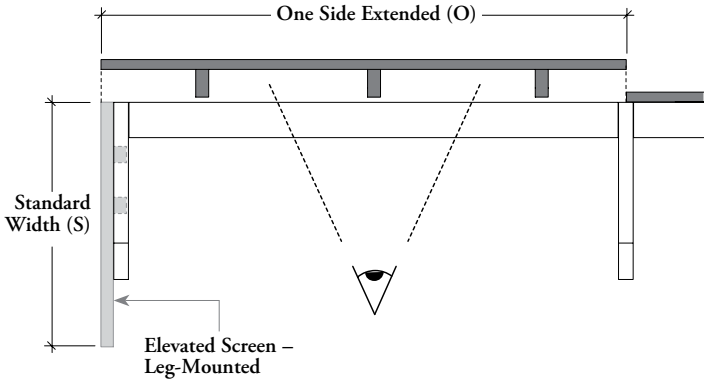

One Side Extended (O)

- Either left or right end of screen is extended to cover the thickness of a perpendicular screen of same material
- Handedness is determined when looking at the inner side of the screen
- Can be specified with Solid or Fabric Elevated Screens – Leg-Mounted only, refer on Leg-Mounted Screens section for more details

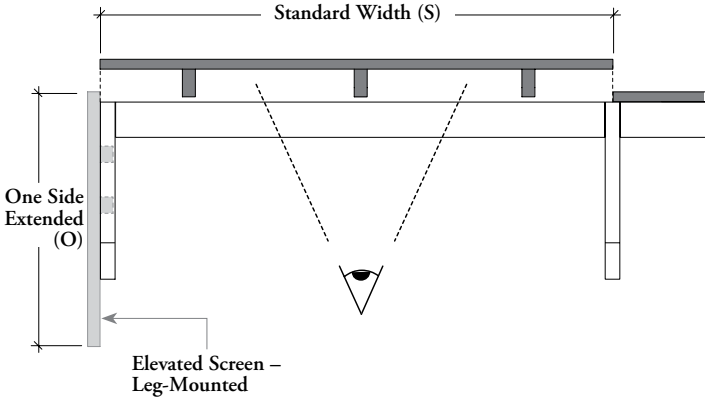

Standard Width (S)

- Both ends of screen come flush with supports on both sides
- Can be specified with Solid or Fabric Elevated Screens – Leg-Mounted only, refer on Leg-Mounted Screens section for more details

planning with elevated screens – ez fence beam-mounted

The following should considered when planning with Elevated Screens – EZ Fence Beam-Mounted.

- Are available in various heights to provide different levels of privacy
- Can be used in linear planning only.
- Only on-module applications are allowed
- **Cannot** be mounted on a 18" low height EZ Fence

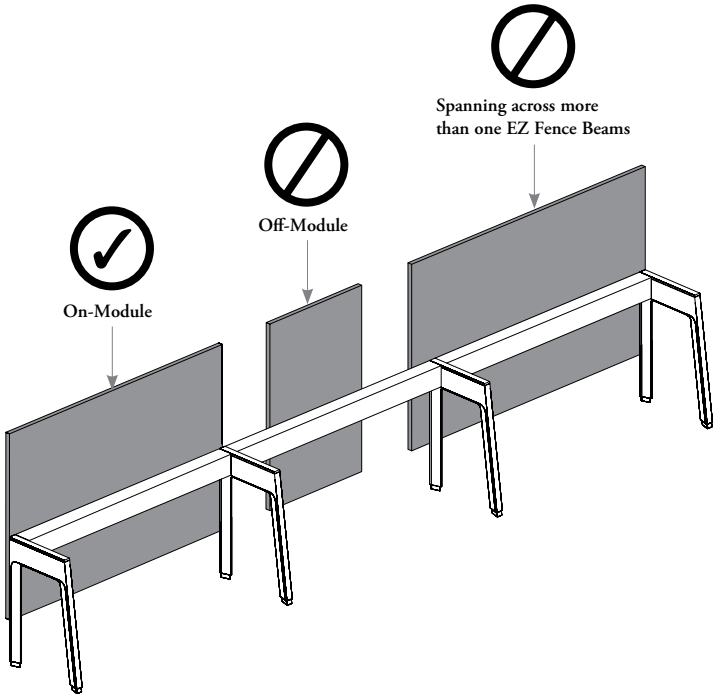

All Elevated Screens – EZ Fence Beam-Mounted must be specified the same width than the EZ Fence Beam on which it is mounted

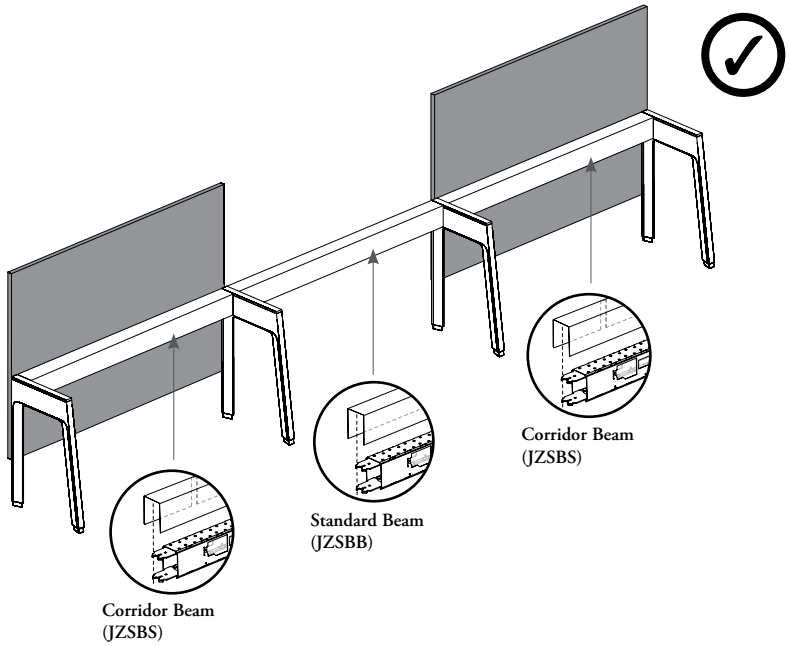

Can be mounted **not** contiguously on a EZ Fence. It is recommended to used the EZ Fence (JZSBB) for in-line section because the back side of the EZ Fence Beam for Corridor is **not** aesthetic

planning with elevated screens – ez fence beam-mounted (continued)

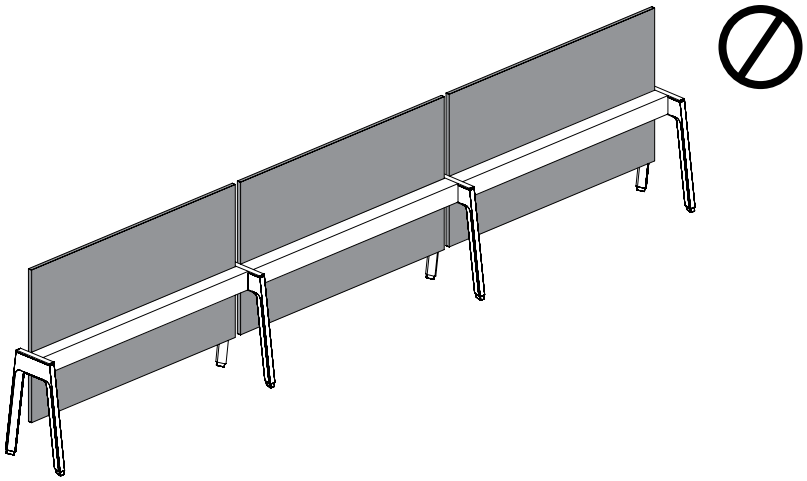

All Elevated Screens – EZ Fence Beam-Mounted **cannot** be mounted on Shared EZ Fence Structure. These screens can be specified on-module on Single-Sided EZ Fence Structure only

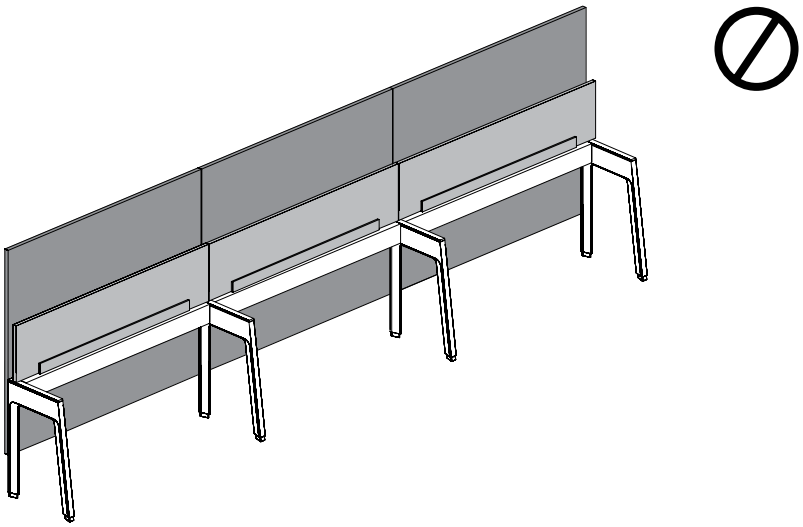

In Single-Sided Configuration it **not** possible to use EZ Elevated Screen and EZ Add-On Screen at the the same time. There is **no** EZ Fence Beam for Corridor (JZSBS) configuration that can allow that

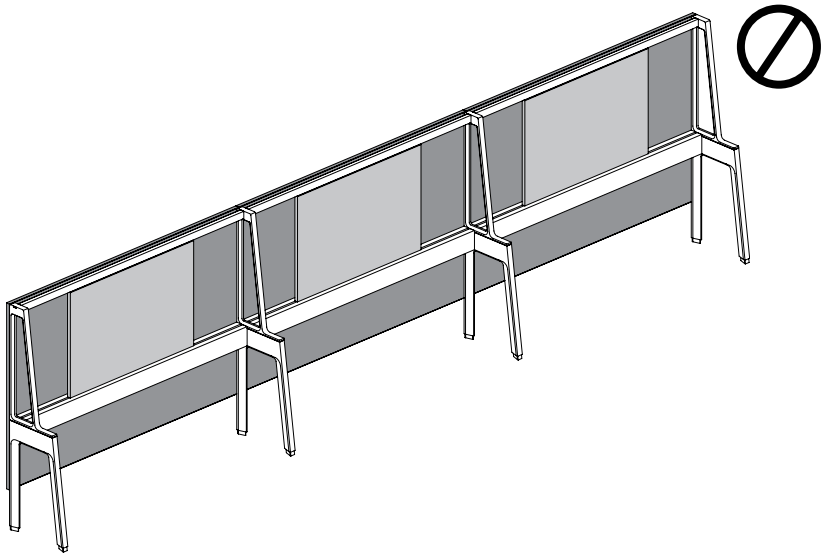

Elevated Screen and EZ Upper A-Frame Structure **cannot** be combined on the same beam. This application would make the structure unstable

modesty or floor screens – ez fence beam-mounted basics

The Modesty & Floor Screens – EZ Fence Beam-Mounted create privacy and physical separation between workstations or corridor when overlaid on EZ Fence Beam.

- The sizing of the Floor Screen – EZ Fence Beam-Mounted is made accordly to match the dimensions of the EZ Fence Structure
- Floor Screens – EZ Fence Beam-Mounted are available in 42", 51", 57" or 66" Datum Height. Some restrictions may apply depending on the chosen finish
- Modesty Screens – EZ Fence Beam-Mounted is only available in 28" Datum Height to match the finished EZ Fence Beam height
- Floor or Modesty Screens mount only on-module on the back side of EZ Fence Beam for Corridor (JZSBS) or Chicago EZ Fence Beam for Corridor (JZSCS)

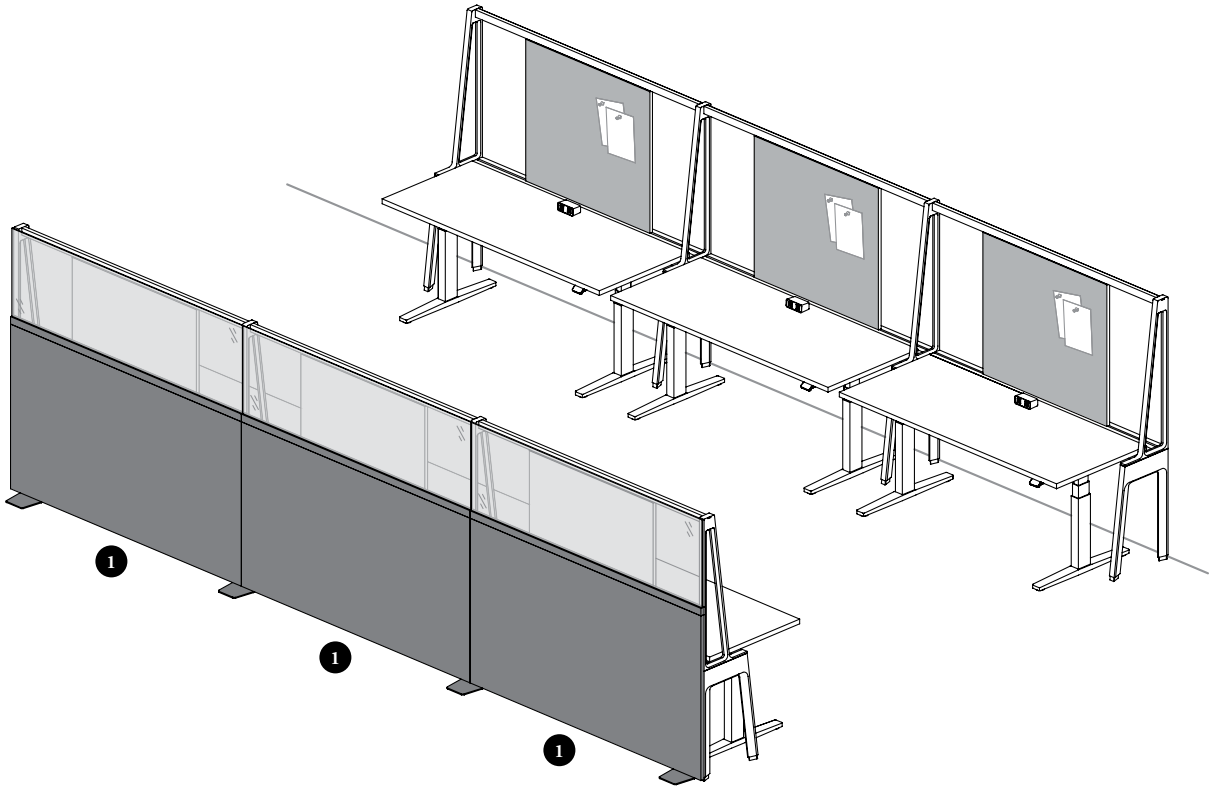

Finishes

Frame (If applicable): Foundation, Mica, Accent
Solid Screen Finishes: Source Laminate
Glass Finishes: Clear (CL), Frost, (FT), Satin (FB), Clear – Low Iron (LA)* or Frost – Low Iron (LB)*
* **Low Iron Glass Finishes** reduce the greenish render of standard glass
Foot Finishes (If applicable): Foundation, Mica, Accent

modesty or floor screens – ez fence beam-mounted basics (continued)

- Three Configurations are available:
  - In-Line (I)
  - End – Left (L)
  - End – Right (R)
- End (E) and In-Line (I) Configurations have dedicated widths to match application requirements
- All solid screen ends can be specified With (W) or Without (N) Alignment Holes to allow installation of Linking Devices

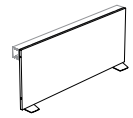

with Foot (JZSMSBF)

with Levelers (JZSMSBL)

Solid Modesty Screen – EZ Fence Beam-Mounted (JZSMSB)

- Match the height of the EZ Fence Beam and EZ Fence Legs with Cover
- Available 1" thick and two-sided finished
- Comes with Levelers (L) or Foot (F) support styles for additional stability
- Only 28" datum height is available
- Widths include 48" – 84" (6" increments)
- Comes with Standard Corner Details (S) only
- Grain direction is always horizontal

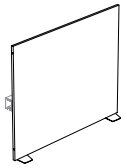

with Foot (JZSFSBF)

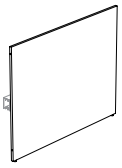

with Levelers (JZSFSBL)

Floor Screen – EZ Fence Beam-Mounted (JZSFSB)

- Available 1" thick and two-sided finished
- Comes with Levelers (L) or Foot (F) support styles for additional stability
- 42", 51" or 57" high datum are available
- Widths include 48" – 84" (6" increments)
- Comes with Standard Corner Details (S) only
- Grain direction is always horizontal

1

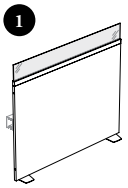

with Foot (JZSFGBF)

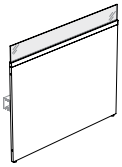

with Levelers (JZSFGBL)

Floor Screen with Glass – EZ Fence Beam-Mounted (JZSFGB)

- Available 1" thick two-sided finished with a 1/4" (6 mm) thick tempered glass on top
- Comes with Levelers (L) or Foot (F) support styles for additional stability
- 42", 51", 57" or 66" high datum are available
- 28", 42" or 51" glass starting high are available
- Widths include 48" – 84" (6" increments)
- Solid portion of screen can be specified With (W) or Without (N) Alignment Holes to allow installation of Linking Devices
- 66" high datum is available with Foot support style only
- Solid portion of screen comes with horizontal grain direction

modesty or floor screens – ez fence beam-mounted basics (continued)

grain direction

- Always runs horizontal
- The grain direction on Laminate Solid Screens is **not** directional. It may appear in different directions on side-by-side screens

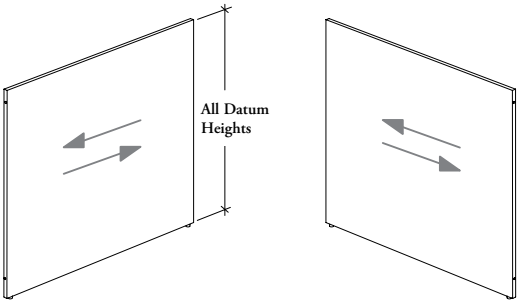

datum heights & alignments

- Floor Screens – EZ Fence Beam-Mounted match Teknion standard datum heights of 42", 51", 57" or 66" when mounted on EZ Fence Beams
- If specified, all solid and solid portion of screens comes with alignment devices. Only screens of the same height and material can be linked together
- Linking Strip for Glass portion screen can be specified separately to provide alignment of glass portion

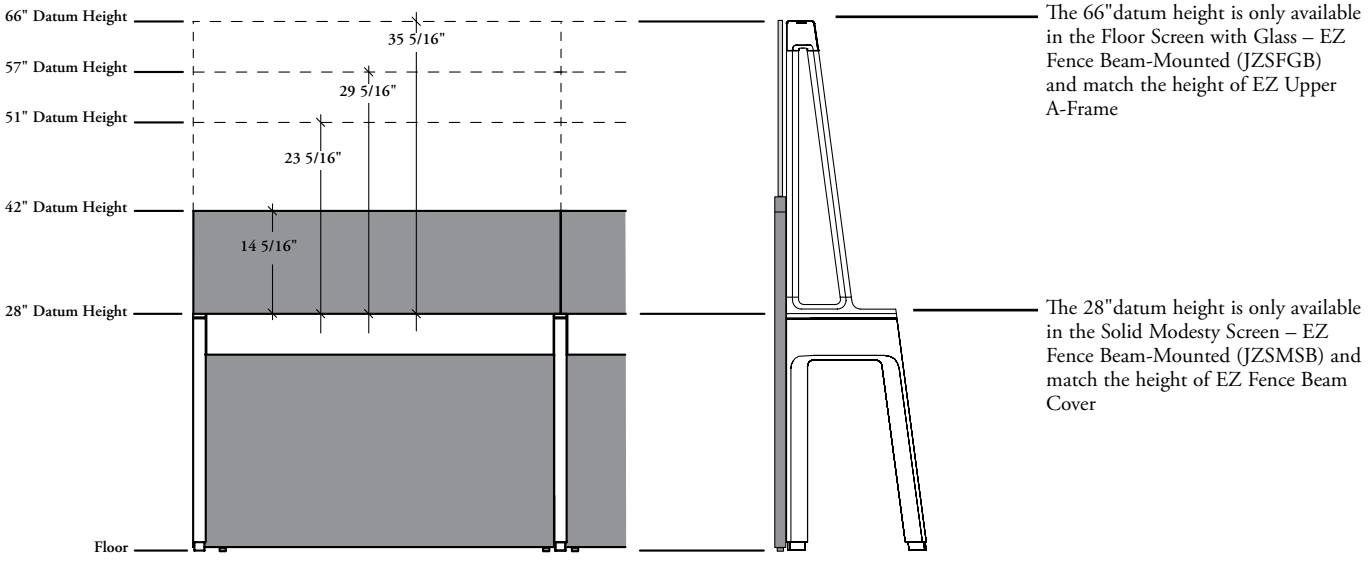

modesty or floor screens – ez fence beam-mounted basics (continued)

datum heights & alignment (continued)

- Alignment of two contiguous screens is enhanced by different devices for Solid and Glass screen materials
- When specified, the screens will come with alignment devices. Screens must have the same height and finish style to use Linking Devices
- The Alignment Holes option must be specified and is recommended on Solid Screens to allow the installation of linking devices. Caps are supplied for unused holes
- Can be used to link EZ Fence Beam-Mounted Floor Screens together or in 90° application to connect to a Floor Screen – Leg-Mounted
- Two Linking Devices styles are available:

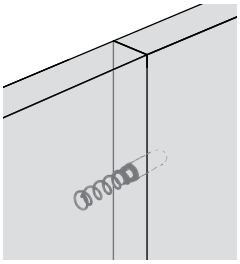

Linking Device for Solid Screens

Always included with Floor Screens, when Alignment Hole option is specified

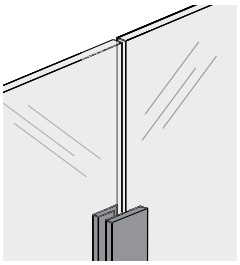

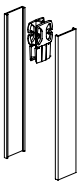

Linking Strip for Glass Screens (JNSLS)

Not included with Floor Screens and can be specified separately. Refer on Workstation Screen section for more details

configurations vs alignment hole positions

The Alignment Holes option must be specified on Solid Modesty or Floor Screens – EZ Fence Beam-Mounted to allow the installation of the linking devices

180° Connection

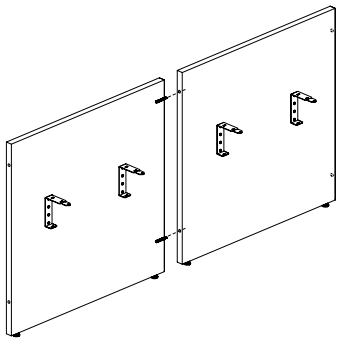

90° Connection

TOP VIEW

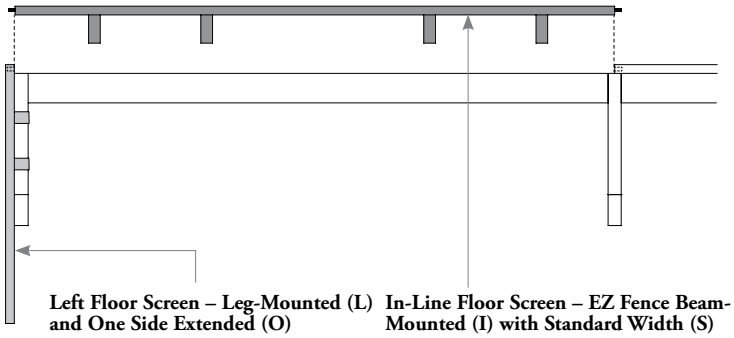

Left Floor Screen – Leg-Mounted (L) and One Side Extended (O)

Two holes on extended surface on Right

In-Line Floor Screen – EZ Fence Beam-Mounted (I) with Standard Width (S)

Two holes on both side edges

Alignment Holes Positions

The Alignment Holes locations will vary depending of the configuration chosen:

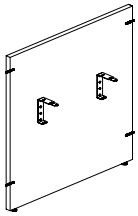

In-Line Configuration (I) and Standard Width (S)

Two holes on both side edges

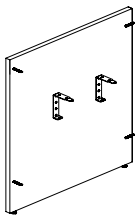

End – Left Configuratrion (L) and One Side Extended (O)

- Two holes on right edge
- Two holes on extended surface on left

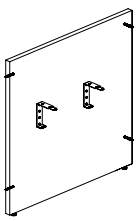

End – Right Configuratrion (R) and One Side Extended (O)

- Two holes on left edge
- Two holes on extended surface on Right

modesty or floor screens – ez fence beam-mounted basics (continued)

end and in-line configurations

- Depending the position of the Modesty or Floor Screen on the EZ Fence Beam, the appropriate configuration must be specified
- Three Configurations are available:
  - In-Line (I) (**Not** Handed)
  - End – Left (L)
  - End – Right (R)
- End (E) and In-Line (I) Configurations have dedicated widths to match application requirements

solid modesty screen ez-fence beam-mounted

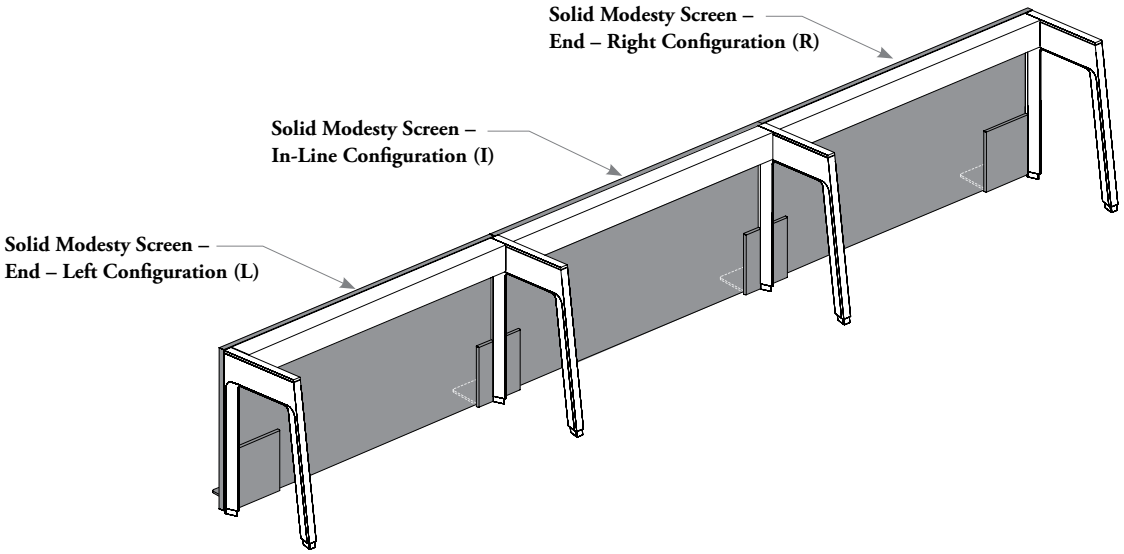

floor screen ez-fence beam-mounted

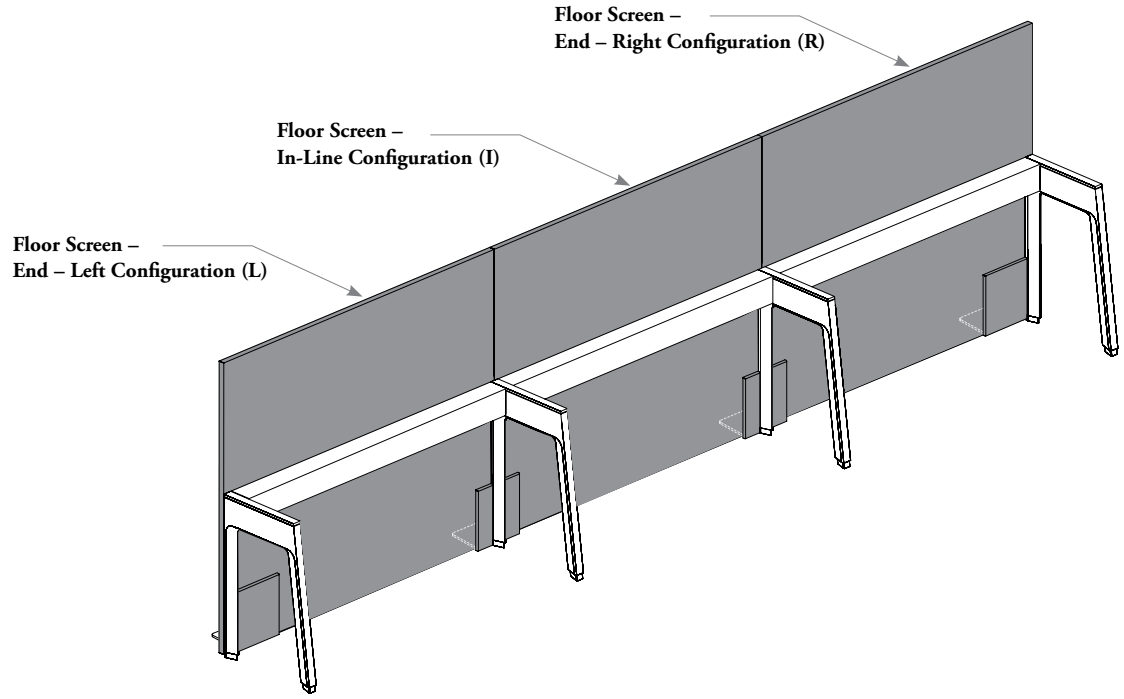

modesty or floor screens – ez fence beam-mounted basics (continued)

support styles

- Two Support Styles are available:
  - Foot (F)
  - Levelers (L)
- The foot support brings more stability to the Single-Sided EZ Fence and allows to meet stability restriction requirements. Refer to EZ Fence Structure section
- When 66" Datum Height is specified on the Floor Screen with Glass, only Foot support style is available
- Foot or Levelers provide a leveling range of 3" (-3/16", +2 13/16")

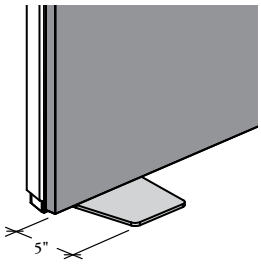

foot details

- Are available in 1/4" thick and with bumpers
- Foot option protube 5" from the Modesty or Floor Screen
- Tapered look from 6 7/8" at the widest to 5 3/8"
- The end and the intermediate foot will look the same on the outside

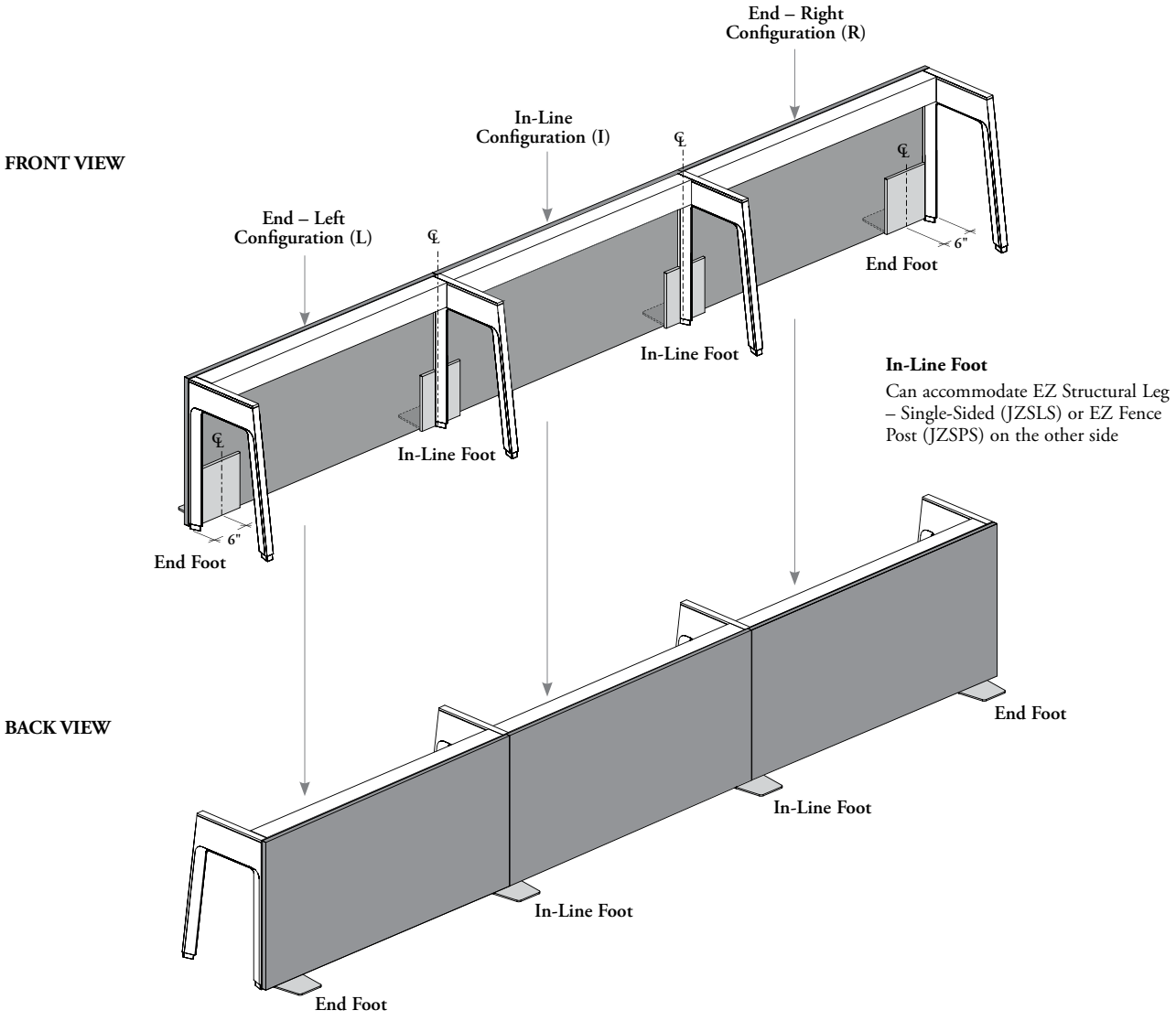

planning with width extension for corner applications – modesty or floor screens – ez fence beam-mounted

The following should considered when planning with Modesty or Floor Screens – EZ Fence Beam-Mounted.

- Width extension for each material is related to its thickness and differ from one another
- Appropriate specification of this option will allow **closing 90° corners made with screens of same material**

TOP VIEWS

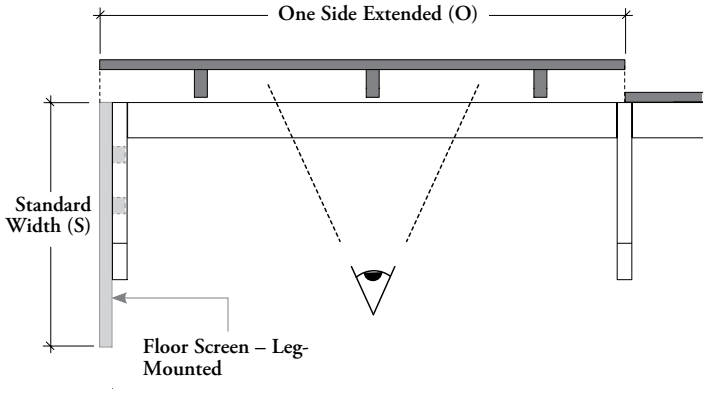

One Side Extended (O)

- **Not** available for Solid Modesty Screen – EZ Fence Beam-Mounted (JZSMSB)
- Either left or right end of screen is extended to cover the thickness of a perpendicular screen of same material
- Handedness is determined by the extended end position when looking at the inner side of the screen
- Can be specified with Solid or Solid with Glass Floor Screens – Leg-Mounted only, refer on Leg-Mounted Screens section for more details

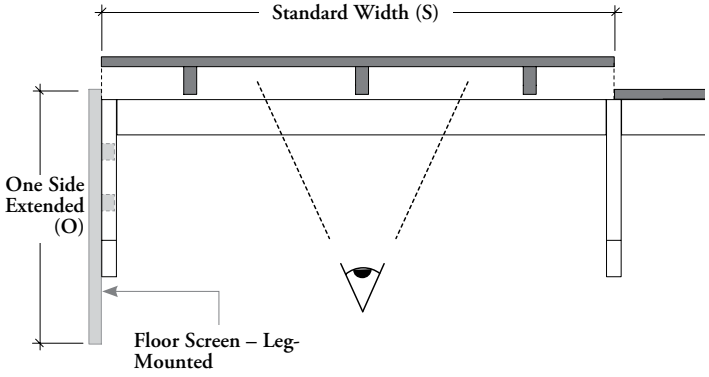

Standard Width (S)

- Both ends of screen come flush with what it is mounted to
- Can be specified with Solid or Solid with Glass Floor Screens – Leg-Mounted only, refer on Leg-Mounted Screens section for more details

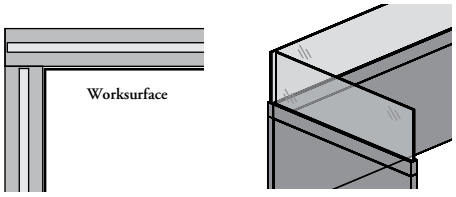

Corners made from two Floor Screens with Glass will be closed on the solid portion only

planning with modesty or floor screens – ez fence beam-mounted

The following should considered when planning with Modesty or Floor Screens – EZ Fence Beam-Mounted.

- Modesty or Floor Screens with Levelers **cannot** be mixed the Modesty or Floor Screens with Foot on the same fence
- Only the Modesty or Floor Screens with Levelers support style, can have a span of one screen on the EZ Fence Beam
- When specified with Foot (F), a minimum span of two screens is required. It must starts with an End-Left configuration (L) and finish with an End-Right configuration (R)

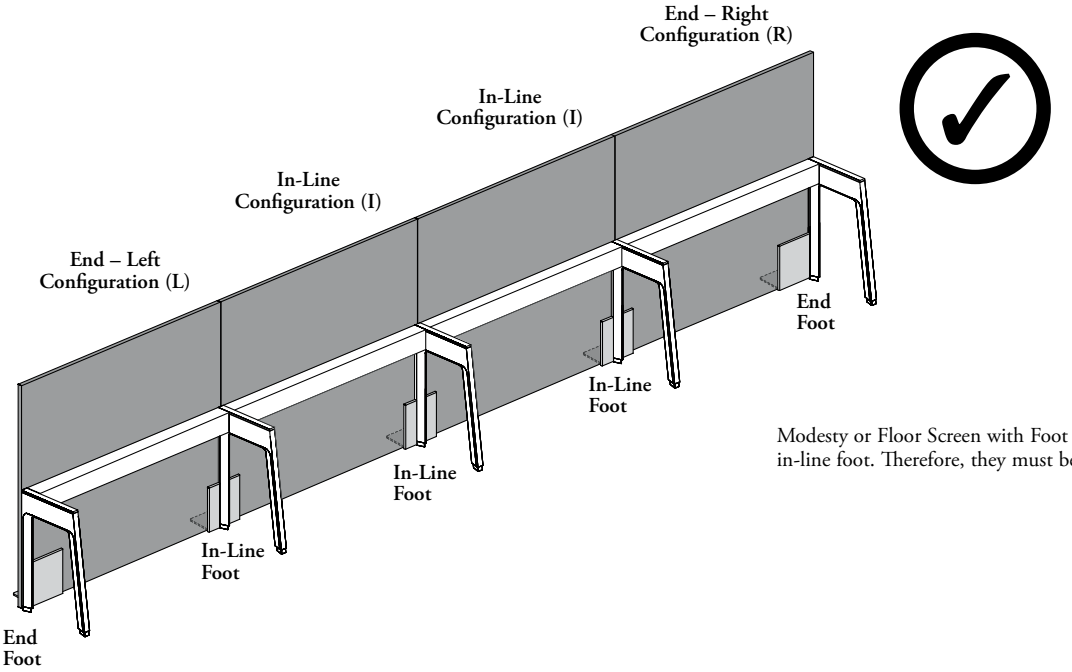

Modesty or Floor Screen with Foot (F) are connected together by the in-line foot. Therefore, they must be used contiguously

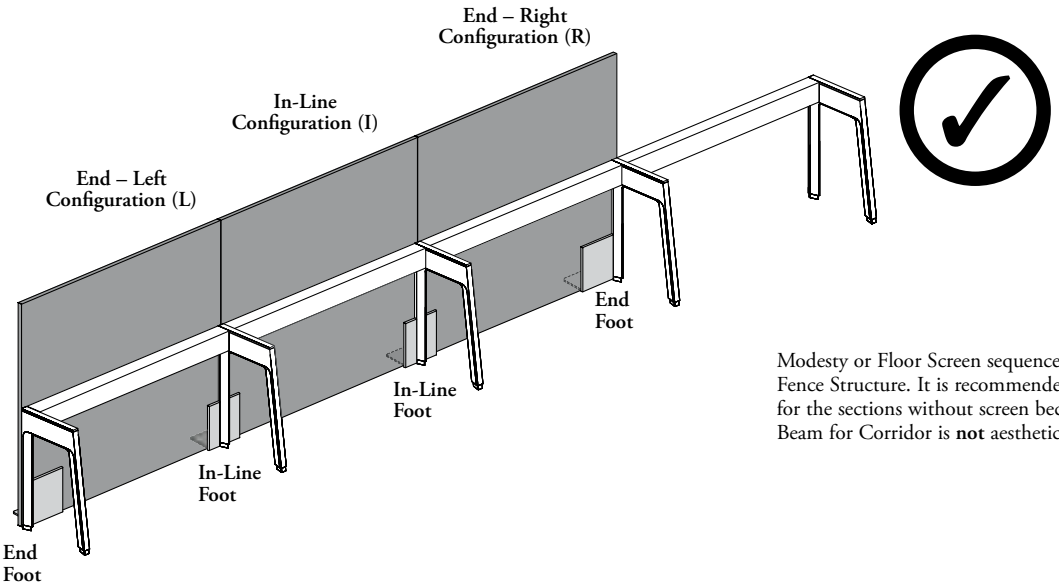

Modesty or Floor Screen sequence can stop before the end of the EZ Fence Structure. It is recommended to use the EZ Fence Beam (JZSBB) for the sections without screen because the back side of the EZ Fence Beam for Corridor is **not** aesthetic

planning with modesty or floor screens – ez fence beam-mounted (continued)

- Are available in various heights to provide different levels of privacy
- Can be used in linear planning only
- Only on-module applications are allowed
- **Cannot** be mounted on a 18" low Fence height application

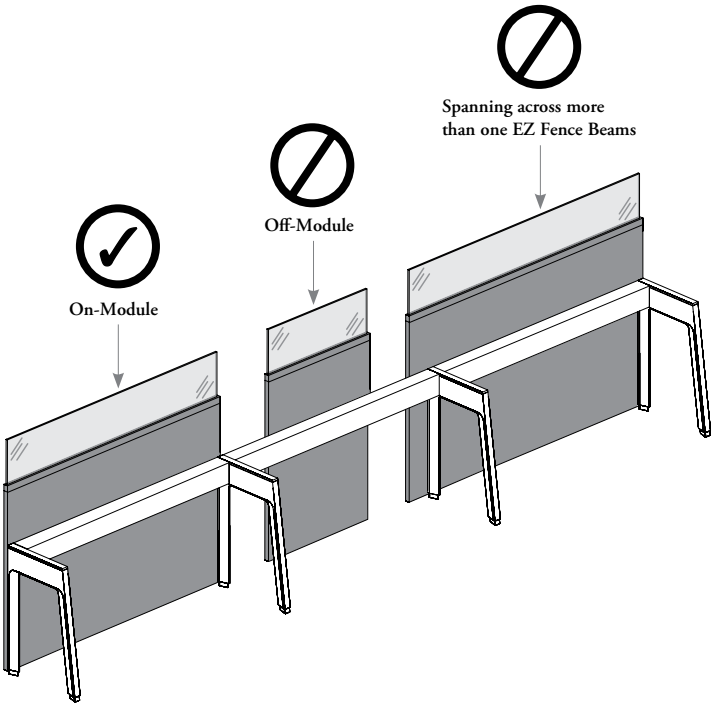

All Modesty or Floor Screens – EZ Fence Beam-Mounted must be specified the same width than the EZ Fence Beam on which it is mounted

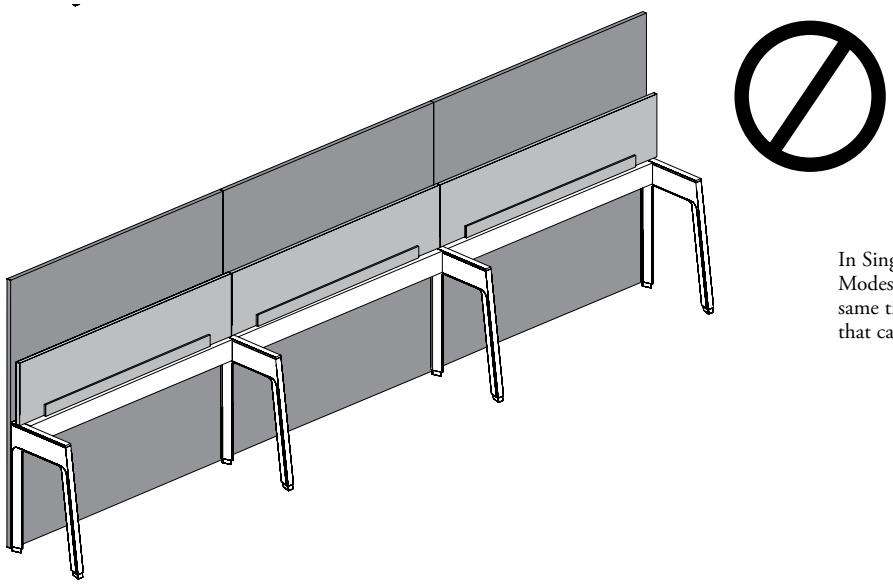

In Single-Sided Configuration it **not** possible to use EZ Modesty or Floor Screen and EZ Add-On Screen at the the same time. There is **no** EZ Fence Beam (JZSBB) configuration that can allow that

planning with modesty or floor screens – ez fence beam-mounted (continued)

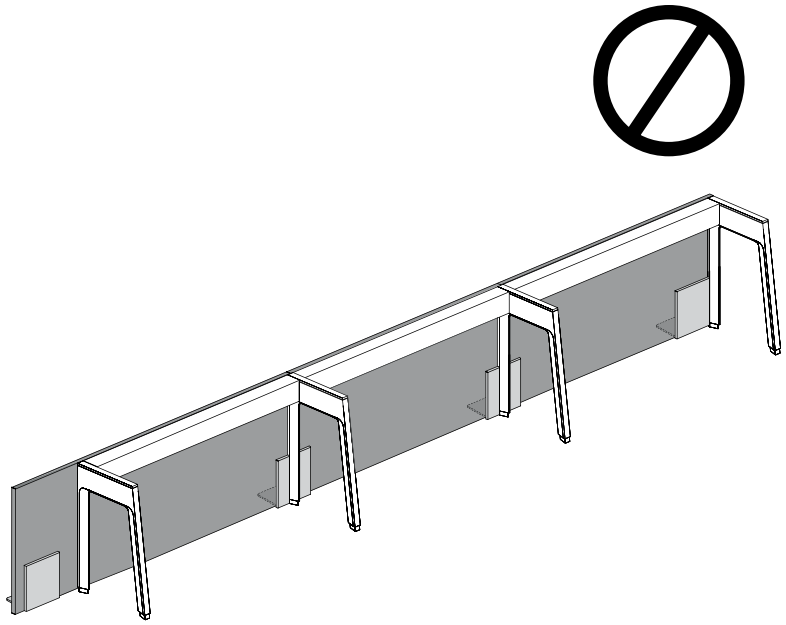

A Modesty or Floor Screen – EZ Fence Beam-Mounted **cannot** exceed a workstation to make a freewing style application

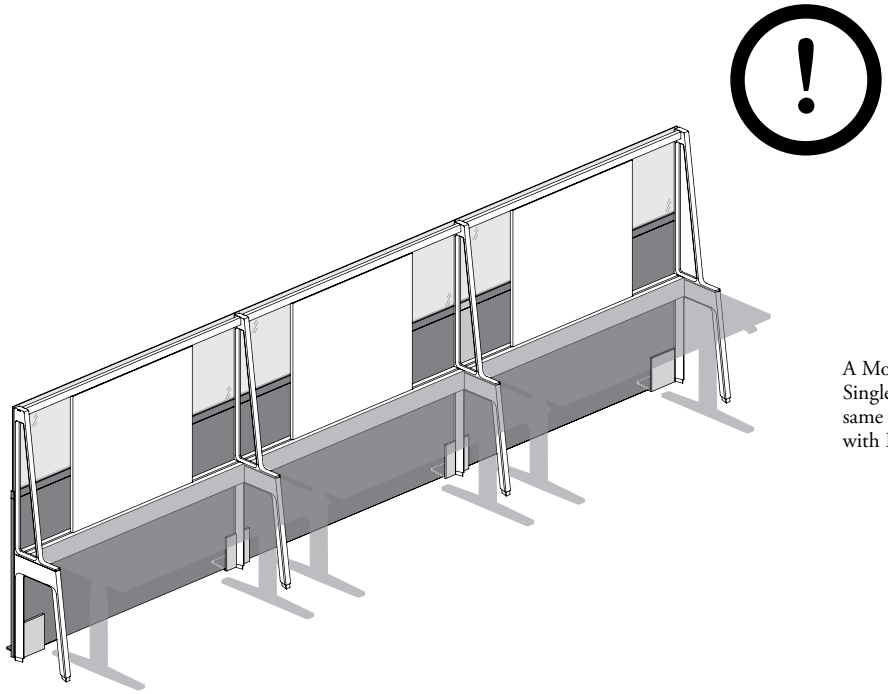

A Modesty or Floor Screen – EZ Fence Beam-Mounted and EZ Single-Sided Upper A-Frame Structure can be combined on the same beam, but the Modesty or Floor Screen must be specified with Foot (F)

floor screens – ez fence post-mounted basics

The EZ Fence Post with Screen Connection is used to connect and support the EZ Fence Beams in combination with Floor Screens – EZ Fence Post-Mounted to create privacy and physical separation between users working on the same EZ Fence.

- Floor Screens – EZ Fence Post-Mounted (JZSFSP or JZSFGP) create perpendicular space division to the EZ Fence Structure
- Can be used in Single-Sided (Shown) or shared (Shown) configuration
- 42", 51" or 57" Datum Height are available
- These Floor Screens must be used with with EZ Fence Post with Screen Connection (JZSPS)

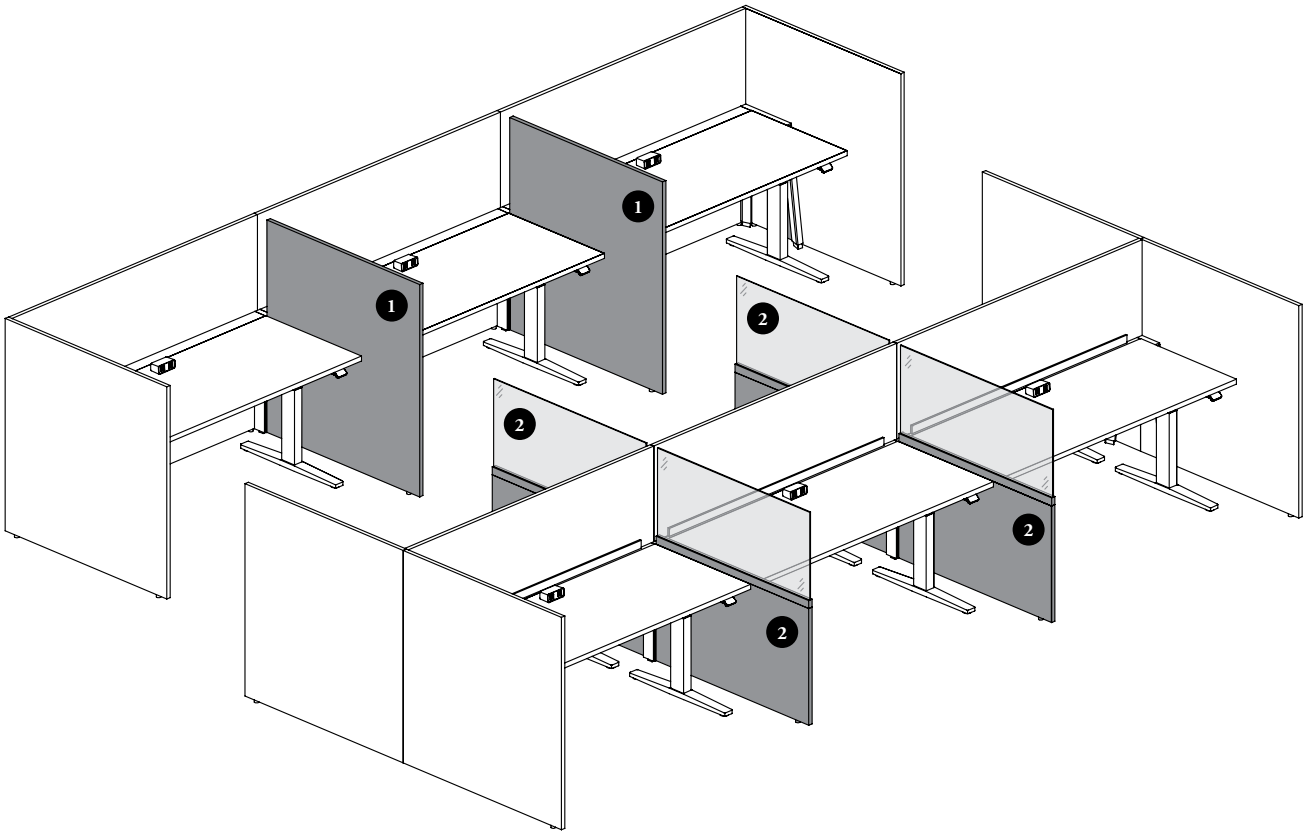

Finishes

Frame (If applicable): Foundation, Mica, Accent
Solid Finishes: Source Laminate
Glass Finishes: Clear (CL), Frost, (FT), Satin (FB), Clear – Low Iron (LA)* or Frost – Low Iron (LB)*
* **Low Iron Glass Finishes** reduce the greenish render of standard glass
Post Mounting Hardware Finishes: Foundation, Mica and Accent

floor screens – ez fence post-mounted basics (continued)

- Come with Standard (S) or Radius (R) Corner Details
- Levelers provide a leveling range of 3" (-3/16", +2 13/16")

1

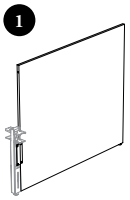

Floor Screen – EZ Post-Mounted (JZSFSP)
- Available 1" thick and two-sided finished
- 42", 51" or 57" datum height are available
- Widths include 24" – 84" (6" increments)
- Grain direction is always horizontal

2

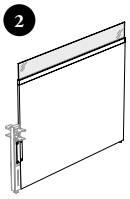

Floor Screen with Glass – EZ Fence Post-Mounted (JZSFGP)
- Available 1" thick and two-sided finished and with a 1/4" (6 mm) thick tempered glass on top
- 42", 51"or 57" high datum are available
- 28"or 42" glass starting height are available
- Widths include 24" – 84" (6" increments)
- Solid portion of screen comes with horizontal grain direction

corner details

- Can be specified with Standard (S) or Radius (R) Corner Details
- Standard Corners (S) come with four Square Corners
- Radius Corners (R) come with four Radius Corners, three with 2" radius and one 1" radius, except with glass version, see image below

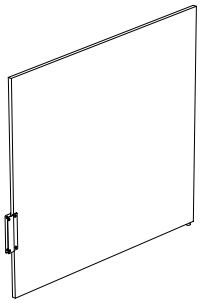

Standard Corners (S)

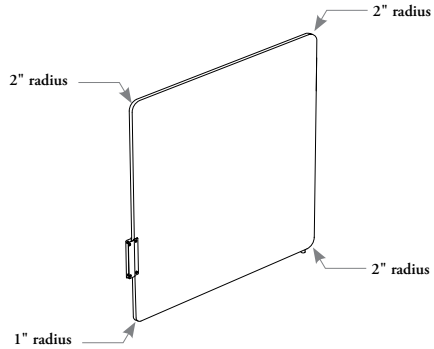

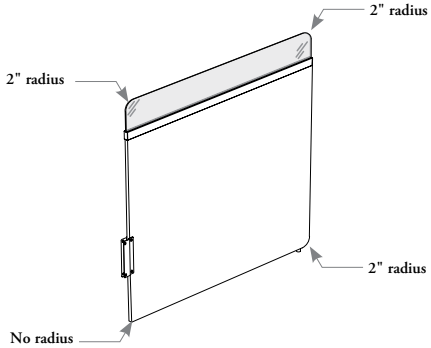

Radius Corners (R)

grain direction

- Always runs horizontal
- The grain direction on Laminate Solid Screens is **not** directional. It may appear in different directions on side-by-side screens

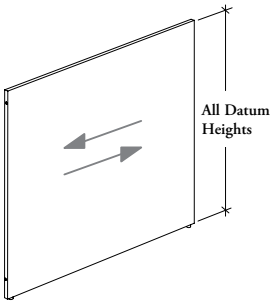

User's Perspective

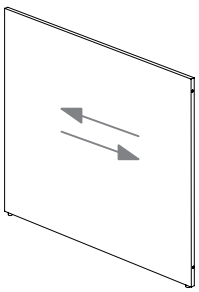

Visitor's Perspective

floor screens – ez fence post-mounted basics (continued)

datum heights & alignments

- 28" glass starting height of the Floor Screens with Glass – EZ Fence Post-Mounted (JZSFGP) will match the EZ Glass Add-On Screens – EZ Fence Beam-Mounted (JZSAGB)
- The side cover of the Add-On Screens will match the height of the extrusion at the bottom of the glass section of the floor screen, but there will be a gap between them
- **No** alignment holes/devices options are available

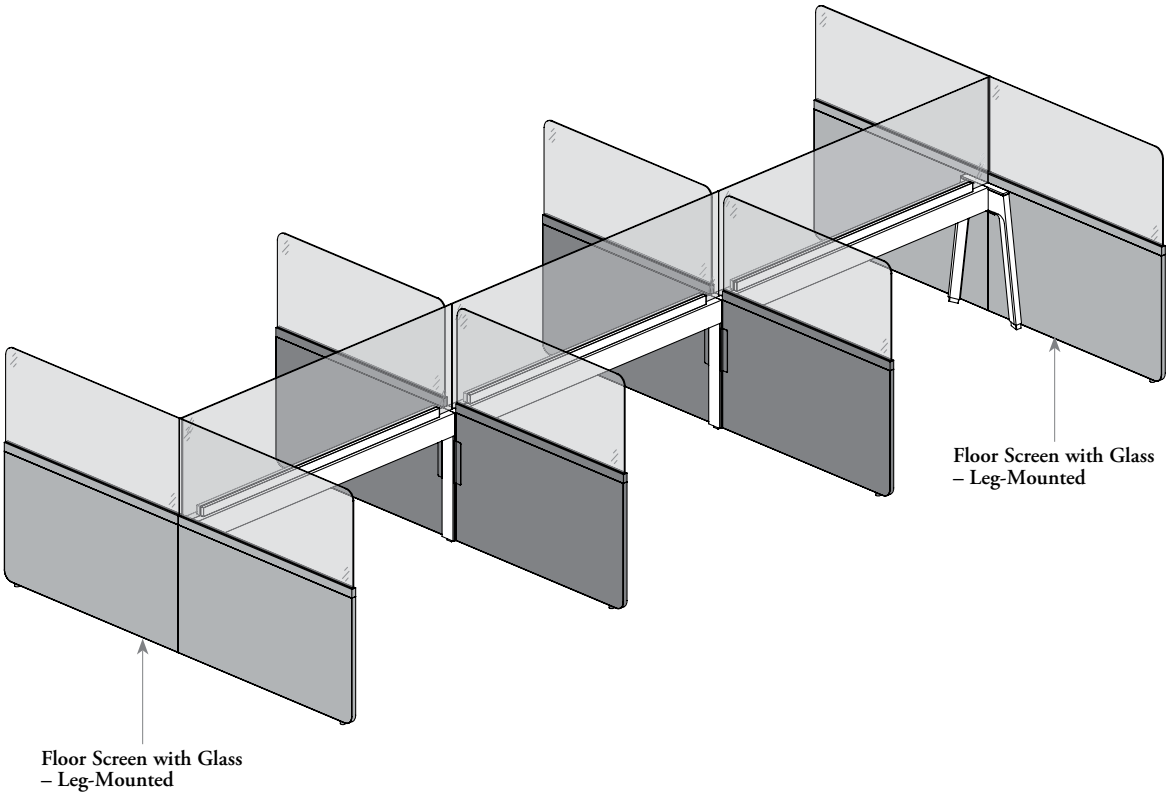

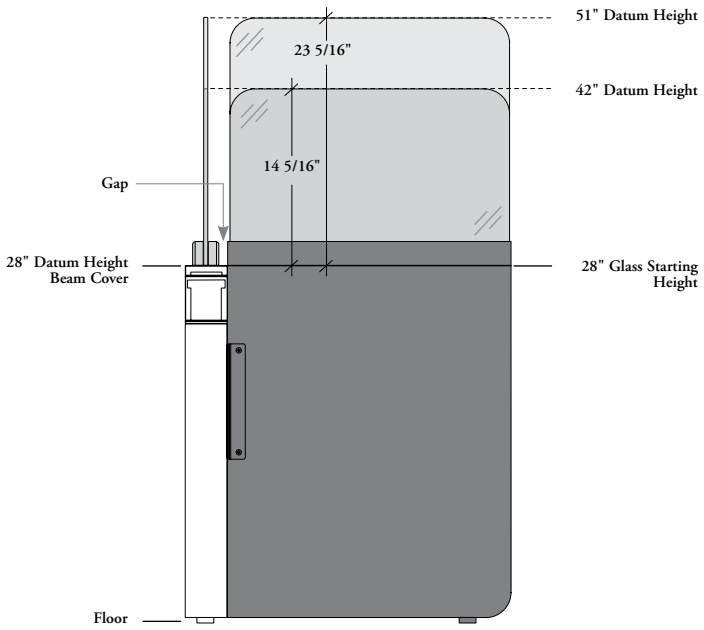

planning with width reduction for floor screens – ez fence post-mounted

The following should considered when planning with Floor Screens – EZ Fence Post-Mounted.

- The Floor Screens – EZ Fence Post-Mounted width reductions ensure to keep an overall nominal footprint, depending on beam application
- Width reduction ensures that the end of the Post-Mounted Screen will align with the end of a Leg-Mounted Screen
- Two Width Reductions are available:
  – Half-Beam Reduction (H)
  – Full-Beam Reduction (F)

full-beam width reduction (F)

Single-Sided Workstation

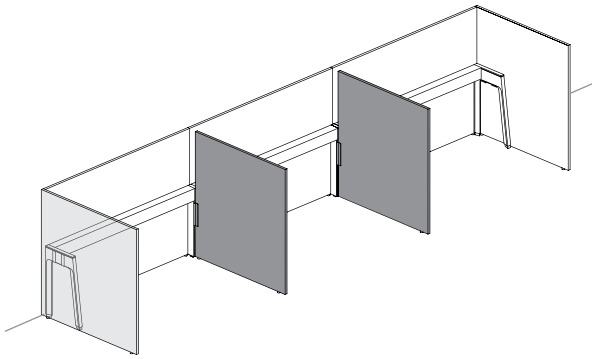

Footprint - - - -

Full-Beam Width Reduction (F)
When a screen is perpendicular to a Single-Sided Beam, the width of the Floor Screen has to be reduced by the beam full depth

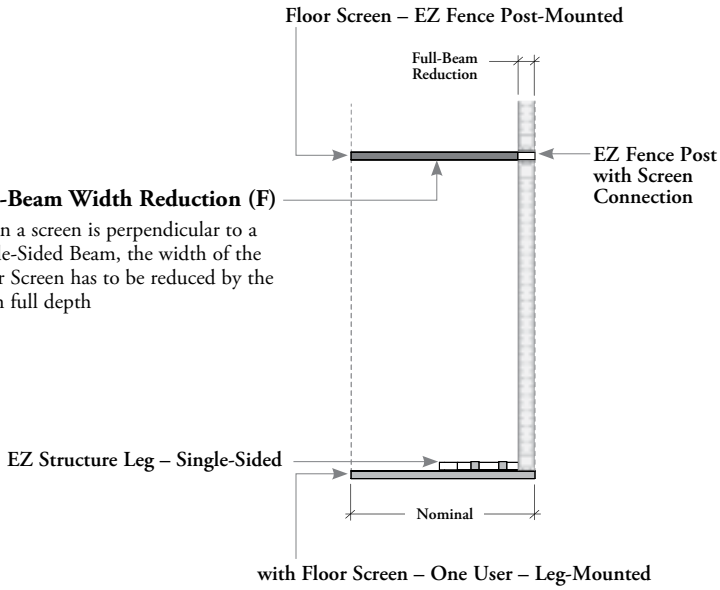

half-beam width reduction (H)

Shared Workstation

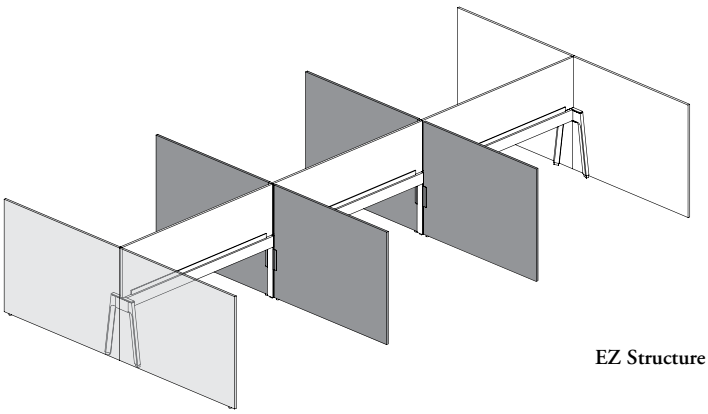

Half-Beam Reduction (H)
When screens are perpendicular to a Shared Beam, the width of the Floor Screens have to be reduced by half of the beam depth

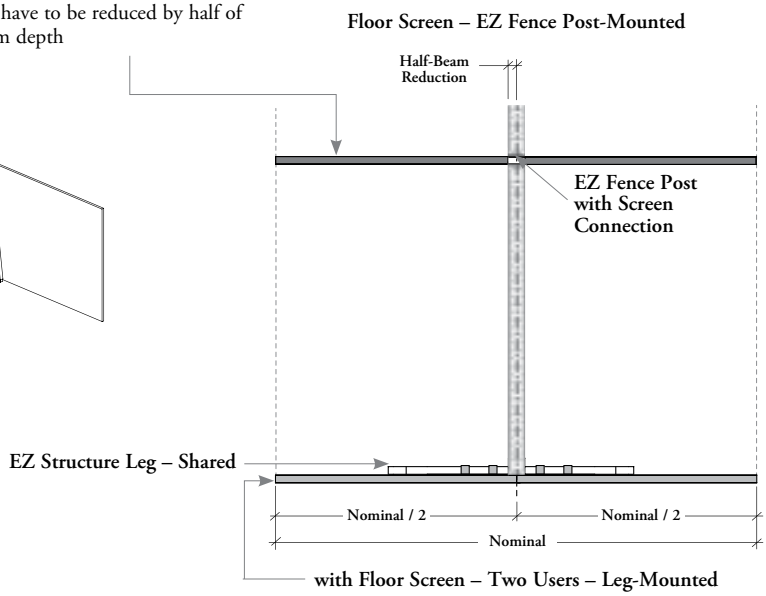

planning with floor screens – ez fence post-mounted

The following should considered when planning with Floor Screens – EZ Fence Post-Mounted.

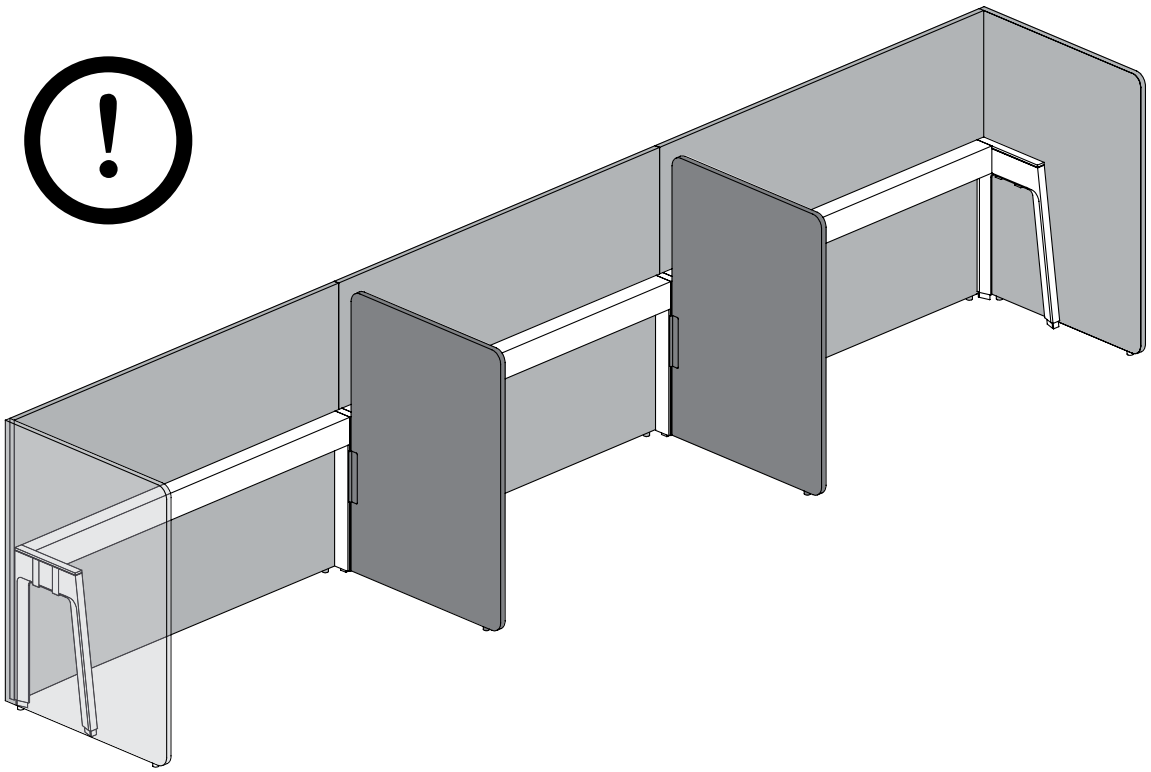

- There will be a gap between the Floor Screens – EZ Fence Post-Mounted and the Add-On Screens or Floor Screens – EZ Fence Beam-Mounted
- The size of that gap will vary depending the workstation layout and the other screen used in the station

Floor Screen – EZ Fence Post-Mounted in combination with Floor Screen – EZ Fence Beam-Mounted

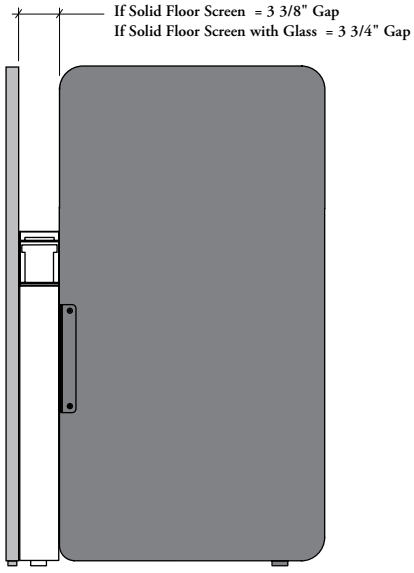

Floor Screen – EZ Fence Post-Mounted in combination with Add-On Screen – EZ Fence Beam-Mounted

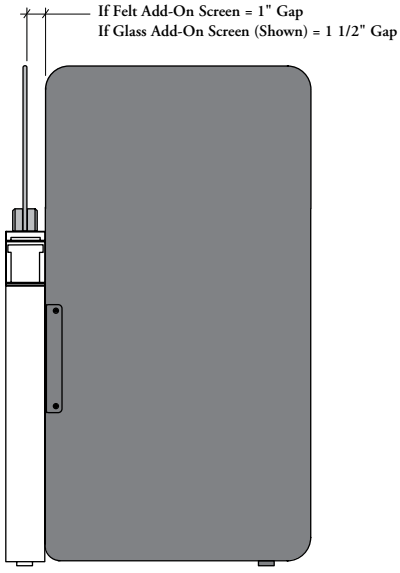

floor screen with metal tower – ez fence post-mounted basics

The EZ Fence Post with Screen Connection is also used to connect and support the EZ Fence Beams in combination with Floor Screen with Towers – EZ Fence Post-Mounted to create privacy and storage area between users working on the same EZ Fence.

- These Floor Screen with Towers – EZ Fence Post-Mounted (JZSFOP, JZSFDP or JZSFTP) create perpendicular space division to the EZ Fence Structure
- Can be used in Single-Sided (Shown) or shared configuration
- 51" or 57" Datum Height are available
- Floor Screen with Metal Tower must be used with an EZ Fence Post with Screen Connection (JZSPS)

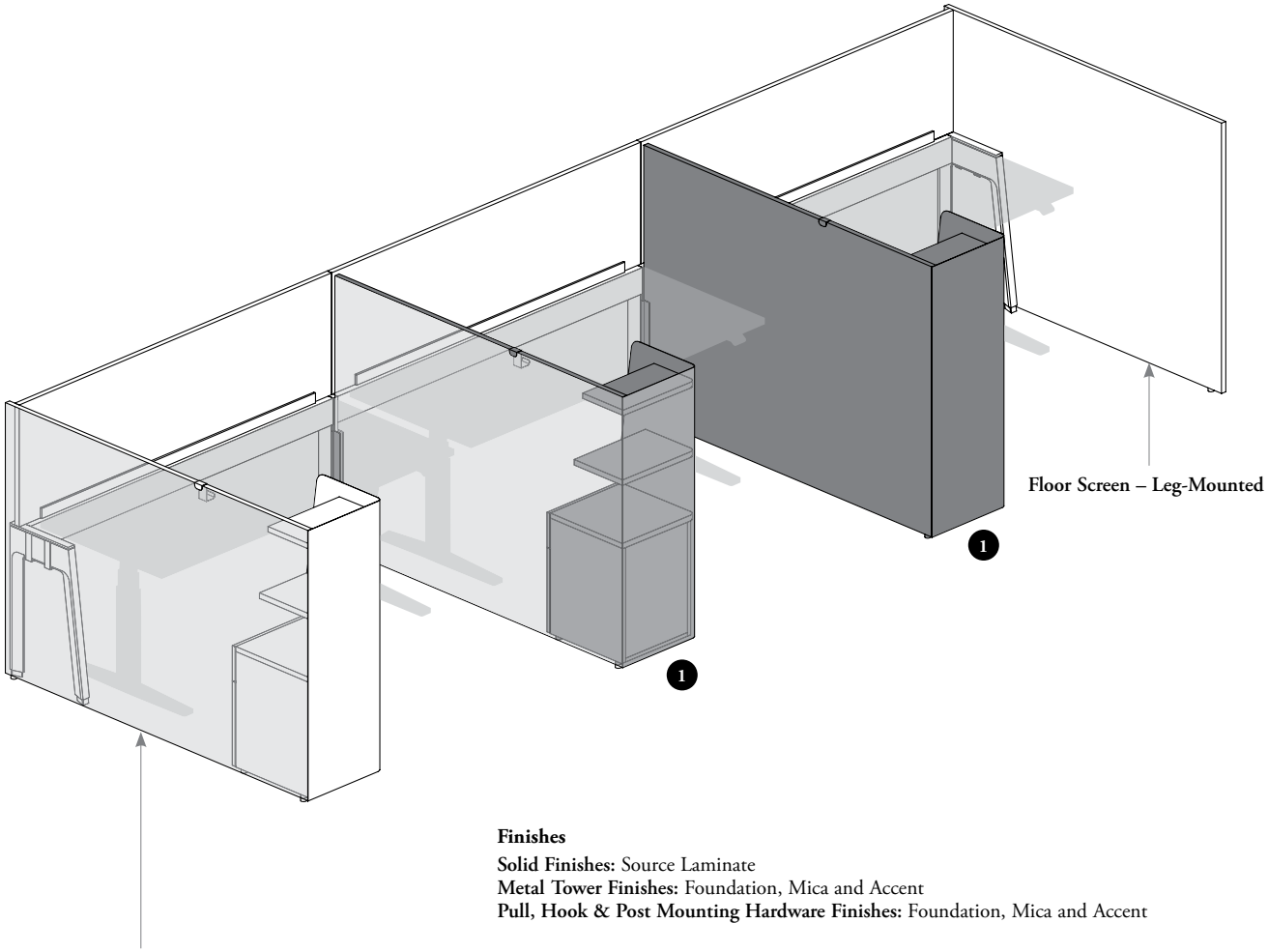

Finishes

Solid Finishes: Source Laminate
Metal Tower Finishes: Foundation, Mica and Accent
Pull, Hook & Post Mounting Hardware Finishes: Foundation, Mica and Accent

NOTE: Since Post-Mounted Screens are only available in In-Line position, Leg-Mounted Screens can be used at the end of the EZ Fence. For more details on this application, refer to Leg-Mounted Screens section

floor screen with metal tower – ez fence post-mounted basics (continued)

- Available 1" thick and two-sided finished and a metal tower with integrated storage attached to it
- Available in 51" or 57" datum height
- Widths include 66" – 84" (6" increments)
- Metal Tower is 16 3/4" width by 19" depth
- Available in Left or Right (Shown) Configuration
- Come with Standard (S) Corner Details only
- Levelers provide a leveling range of 3" (-3/16", +2 13/16")
- Include a storage, two fixed shelves and an hook. Hook can be moved along top screen
- Solid Panel comes with grain direction is always horizontal

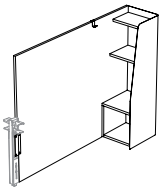

Floor Screen with Metal Tower – Open – EZ Post-Mounted (JZSFOP)
- Tower includes 16 3/8" high Open Storage

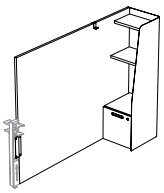

Floor Screen with Metal Tower – One Drawer – EZ Post-Mounted (JZSFDP)
- Tower includes 16 3/8" high storage
- Only Solid with Pull (T) Front Style can be specified
- Comes with Cityline Recessed (C) Pull Style
- Two Storage Configurations are available:
  - File Drawer (F)
  - Recycling/Waste Bin (R)
- Only File Drawer (F) Storage Configuration is lockable

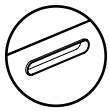

Cityline
Recessed (C)

1

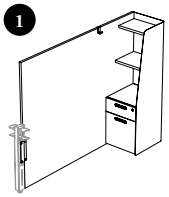

Floor Screen with Metal Tower – Two Drawers – EZ Post-Mounted (JZSFTP)
- Tower includes 23" high drawer storage
- Only Solid with Pull (T) Front Style can be specified
- Comes with Cityline Recessed (C) Pull Style
- Includes a Box Drawer on Upper Storage. Two Lower Storage Configurations can be specified:
  - File Drawer (F)
  - Recycling/Waste Bin (R)
- When the lower configuration is Recycling/Waste Bin (R), only the box drawer is lockable

floor screen with metal tower – ez fence post-mounted basics (continued)

datum heights & alignments

- Floor Screen with Metal Towers match Teknion standard datum heights of 51" and 57"
- There are **no** alignment holes/devices option available

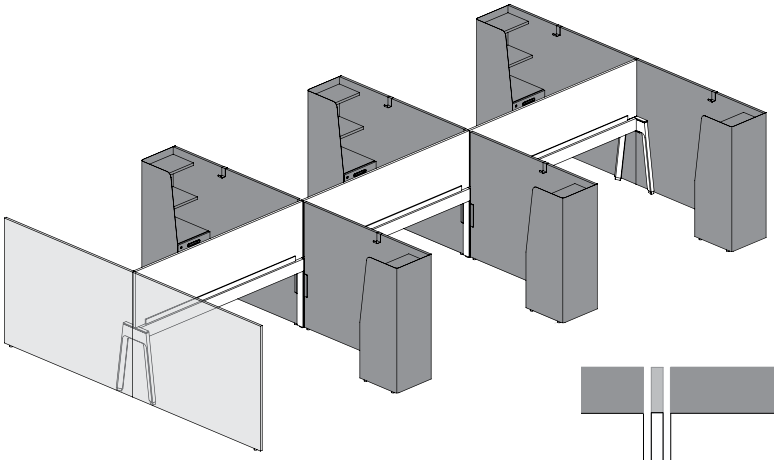

FRONT VIEW

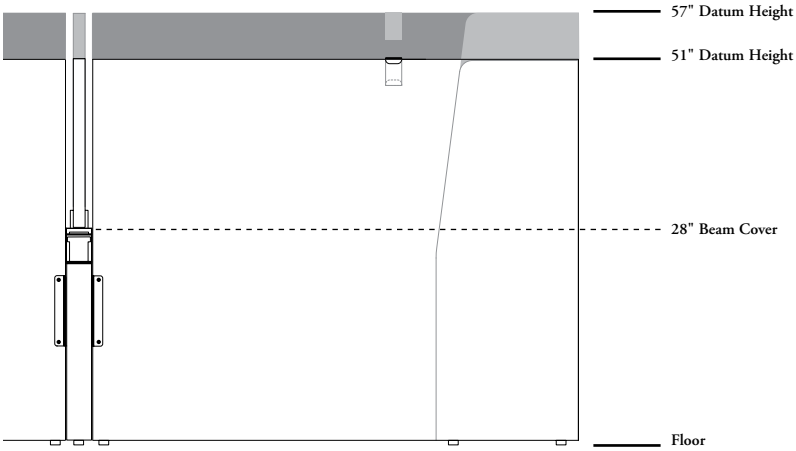

grain direction

- Always runs horizontal
- The grain direction on Laminate Solid Screens is **not** directional. It may appear in different directions on side-by-side screens

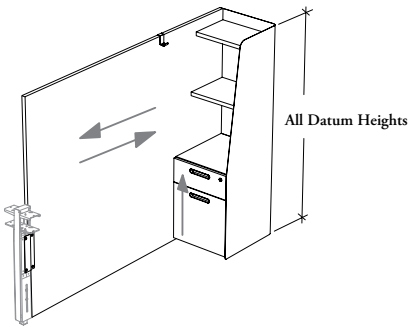

User's Perspective

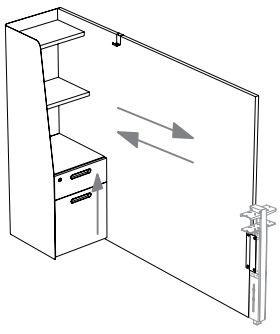

Visitor's Perspective

planning with width reduction for floor screen with metal towers – ez fence post-mounted

The following should considered when planning with Floor Screen with Metal Towers – EZ Fence Post-Mounted.

- The Floor Screen with Metal Towers – EZ Fence Post-Mounted width reductions ensure to keep an overall nominal footprint, depending on beam position
- These reductions also ensure that the end of the Post-Mounted Screen will align with the end of a Leg-Mounted Screen
- Two Width Reductions are available:
  - Half-Beam Reduction (H)
  - Full-Beam Reduction (F)

full-beam width reduction (F)

When a screen is perpendicular to a Single-Sided Beam, the width of the Floor Screen with Metal Tower has to be reduced by the beam full depth

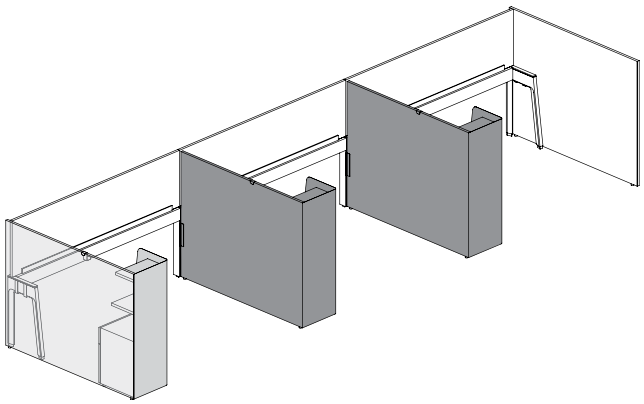

Single-Sided Workstation

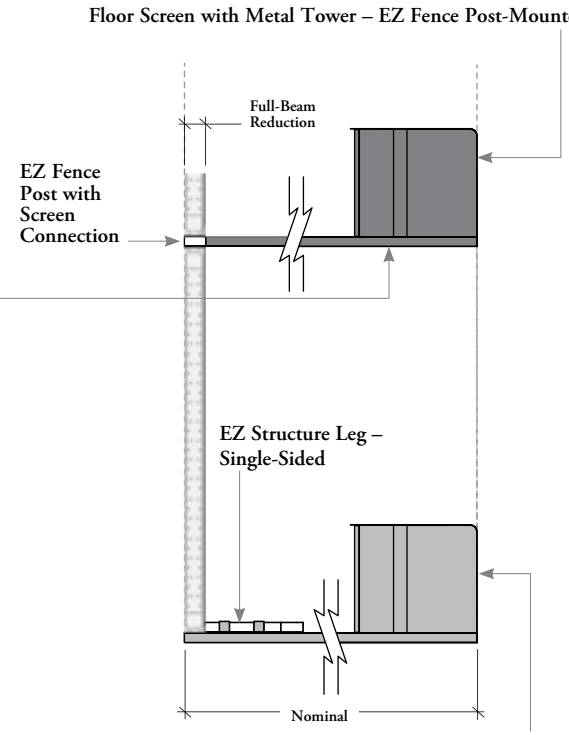

with Floor Screen – One User – Leg-Mounted*

Footprint - - - -

half-beam width reduction (H)

When screens are perpendicular to a Shared Beam, the width of the Floor Screens with Metal Tower have to be reduced by half of the beam depth

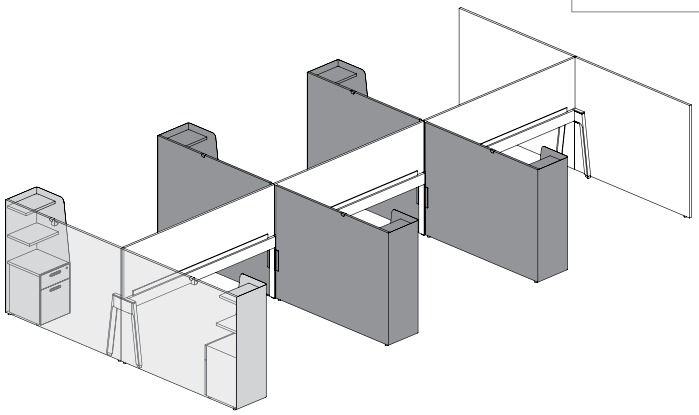

Shared Workstation

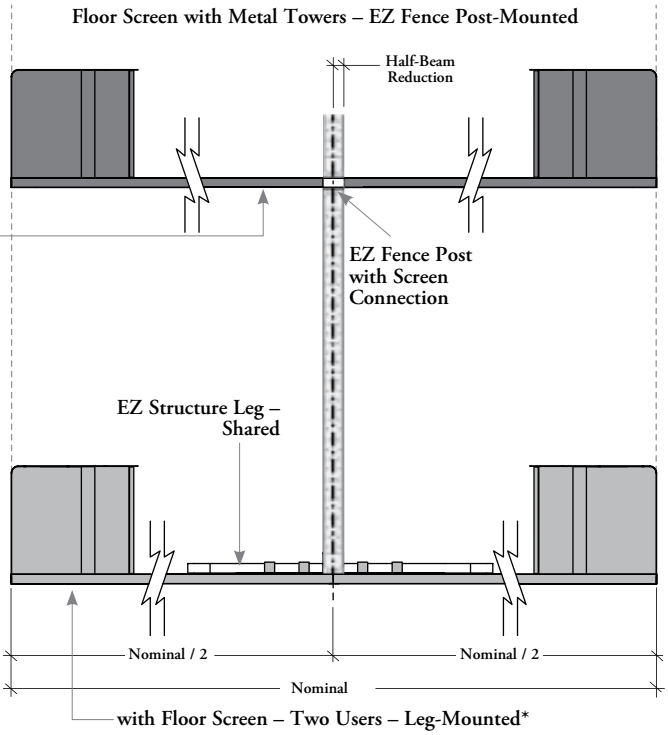

with Floor Screen – Two Users – Leg-Mounted*

* For Leg-Mounted Screen applications, refer to Leg-Mounted Screens section

planning with floor screen with metal towers – ez fence post-mounted

The following should considered when planning with Floor Screens – EZ Fence Post-Mounted.

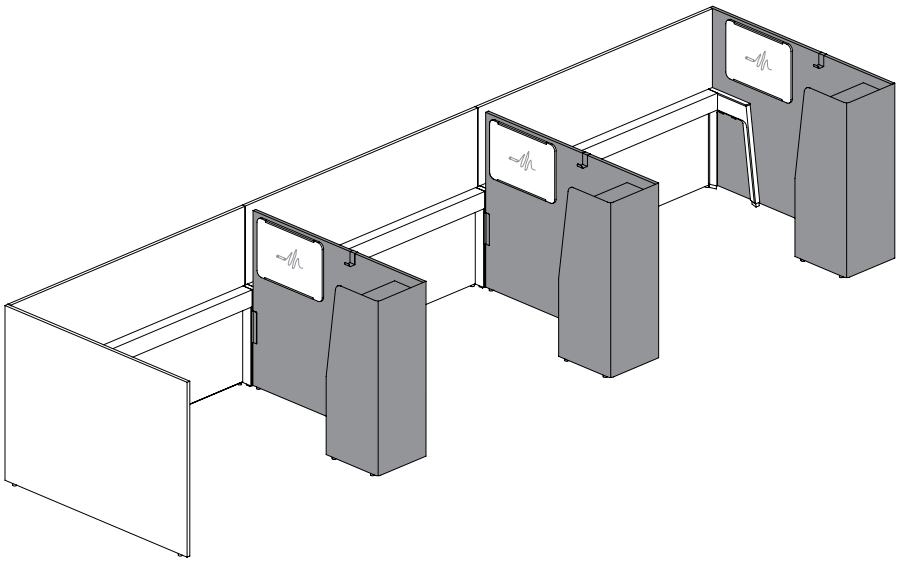

- Casual Board can be used with Floor Screen with Metal Towers

- There will be a gap between the Floor Screen with Metal Towers – EZ Fence Post-Mounted and the Add-On Screens or Floor Screens – EZ Fence Beam-Mounted
- The size of that gap will vary depending the workstation layout and the other screen used

Floor Screen with Metal Tower – EZ Fence Post-Mounted in combination with Floor Screen – EZ Fence Beam-Mounted

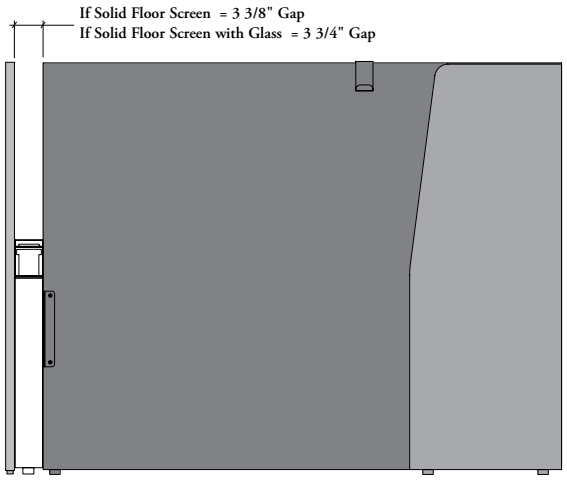

Floor Screen with Metal Tower – EZ Fence Post-Mounted in combination with Add-On Screen – EZ Fence Beam-Mounted

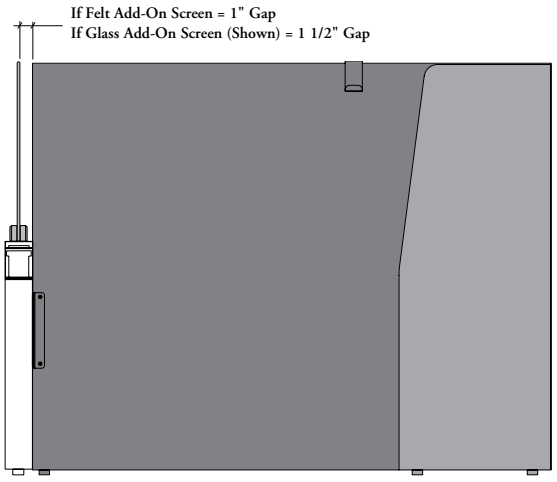

planning with floor screen with metal towers – ez fence post-mounted (continued)

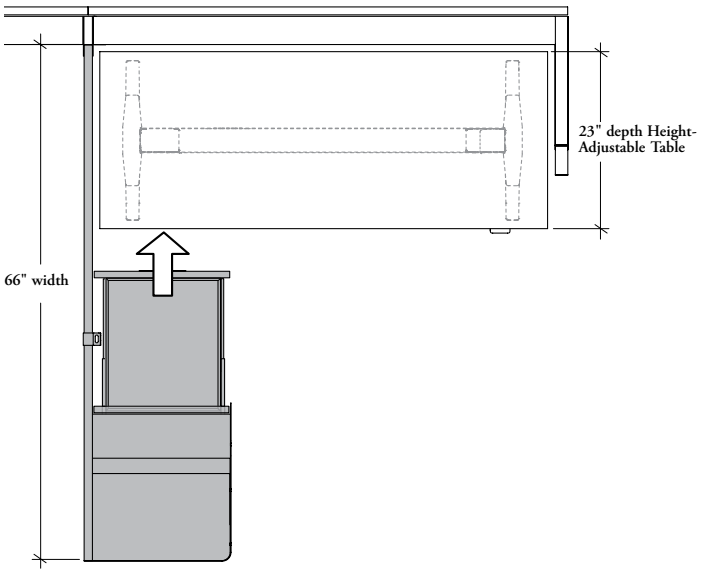

Floor Screen with Metal Tower with Height-Adjustable Table

It is recommended the use a 23" deep Height-Adjustable Table, when a 66" wide Floor Screen with Metal Tower and Drawer(s) to avoid potential conflict between the drawer and the table foot

Each Floor Screen with Metal Tower, comes with a Hook (or 2 for two users screens) that can be repositioned on the floor screen (user reconfigurable)

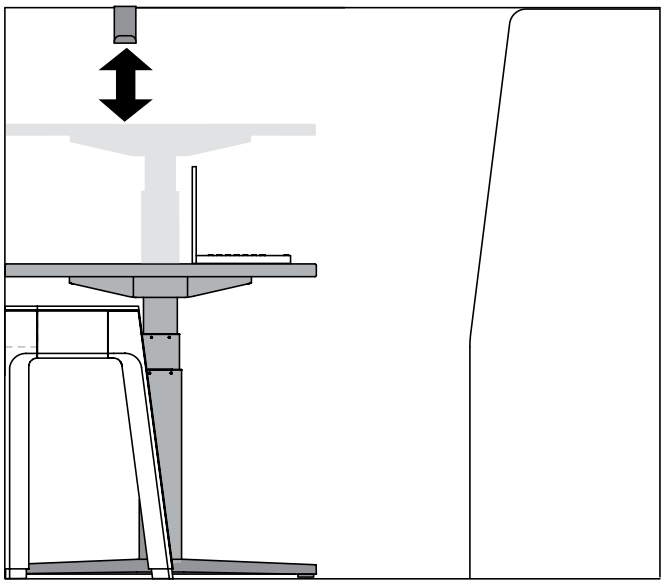

Teknion **doest not** recommend the use a Floor Screen Hook over the Height-Adjustable Worksurfaces. Damages or personal injuries may occur, if accessories are positioned beneath hook

drawer widths & lock chart – floor screen with metal towers – ez fence post-mounted

The following illustrates drawer and open sections nominal widths of the metal towers.

- Fixed Shelves are the same height regardless the configuration of the floor screen. Their position will only vary with the datum height specified
- Left configuration is shown

Metal Tower – Open (JZSFOP)

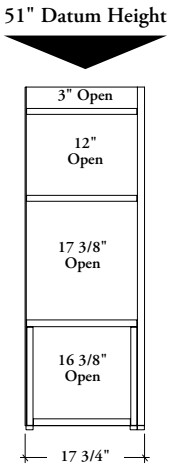

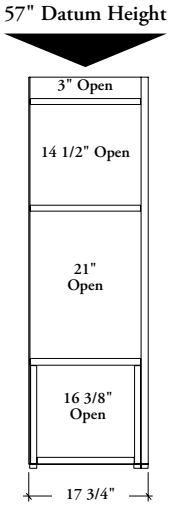

Metal Tower – One Drawer (JZSFDP)

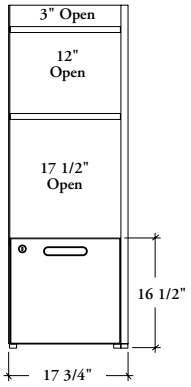

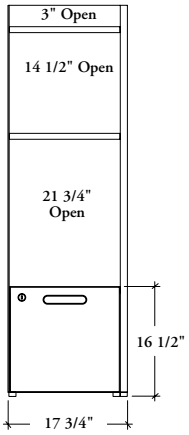

Metal Tower – Two Drawers (JZSFTP)

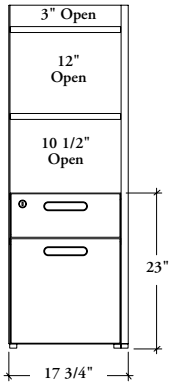

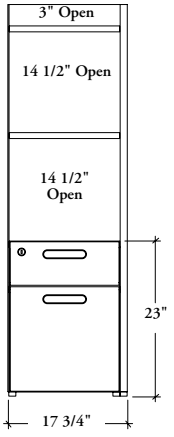

drawer widths & lock chart – floor screen with metal towers – ez fence post-mounted (continued)

Lateral file drawer storage capacities and number of lock are shown below for metal tower with one or two drawers.

Hanging File Bars are supplied in sufficient quantity to accomplish all that is shown below

lateral file drawer widths

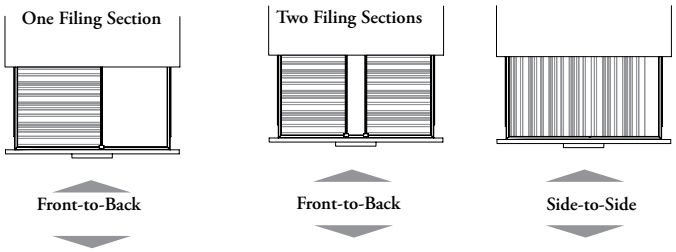

16" wide drawers

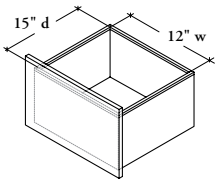

Hanging File Bar (JNFALB) can be ordered separately for replacement of original bars

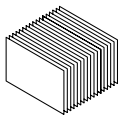

- Letter

n/a

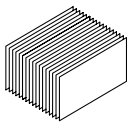

- Letter
- Legal

lock chart

- If specified, all closed storage come with a lock and key set and can be keyed alike or randomly. A Key Chart must accompany every order, otherwise orders will be shipped keyed randomly
- Lock is always placed on the metal tower side

		number of locks
Lock on Right	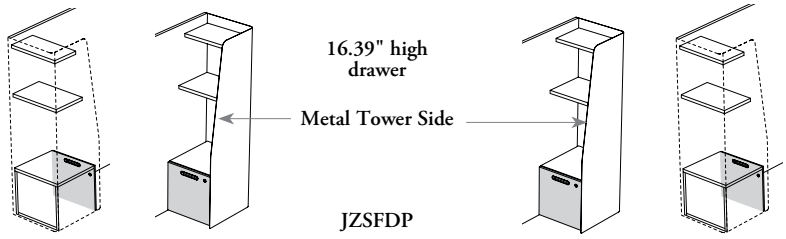 16.39" high drawer Metal Tower Side JZSFDP Lock on Left	1 x
Lock on Right	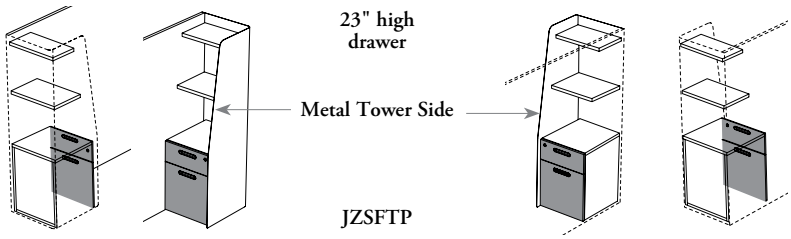 23" high drawer Metal Tower Side JZSFTP Lock on Left	1 x

Lockable Single Drawer Lockable Double Drawers

ez suspended storage

ez suspended storage

UNDERSTANDING EZ SUSPENDED STORAGE 186

EZ SUSPENDED CREDENZA BASICS 187

PLANNING WITH EZ SUSPENDED CREDENZAS 190

PLANNING WITH BEAM-MOUNTED STORAGE 193

PLANNING WITH POWER & DATA – EZ SUSPENDED CREDENZA – MEDIA CENTER – SINGLE-SIDED 195

DRAWERS & OPENING SIZING CHART – EZ SUSPENDED CREDENZA 196

INTEGRATING ACCESSORIES (OPTIONAL) – EZ SUSPENDED CREDENZA 199

LOCK CHART – EZ SUSPENDED CREDENZA 200

EZ SUSPENDED SHELF BASICS 201

GRAIN DIRECTION – EZ SUSPENDED STORAGE 202

understanding ez suspended storage

The EZ Fence Structure allows the mounting of a variety of EZ Suspended Storage creating a functional environment while keeping an impression of lightness.

EZ compatible All EZ Suspended Credenzas in this section are only compatible with the EZ Fence Structure

- EZ Suspended Storage must always be used with 20" deep EZ Fence Legs (JZSFS) and EZ Fence Beams (JZSBB or JZSCB)
- Suspended Credenzas found in the Beam-Mounted Storage section can also be used with the EZ Fence Structure. In these cases, Single- or Double-Sided EZ Structural Legs must be used. Refer on page 193 and Beam-Mounted Storage section for more details

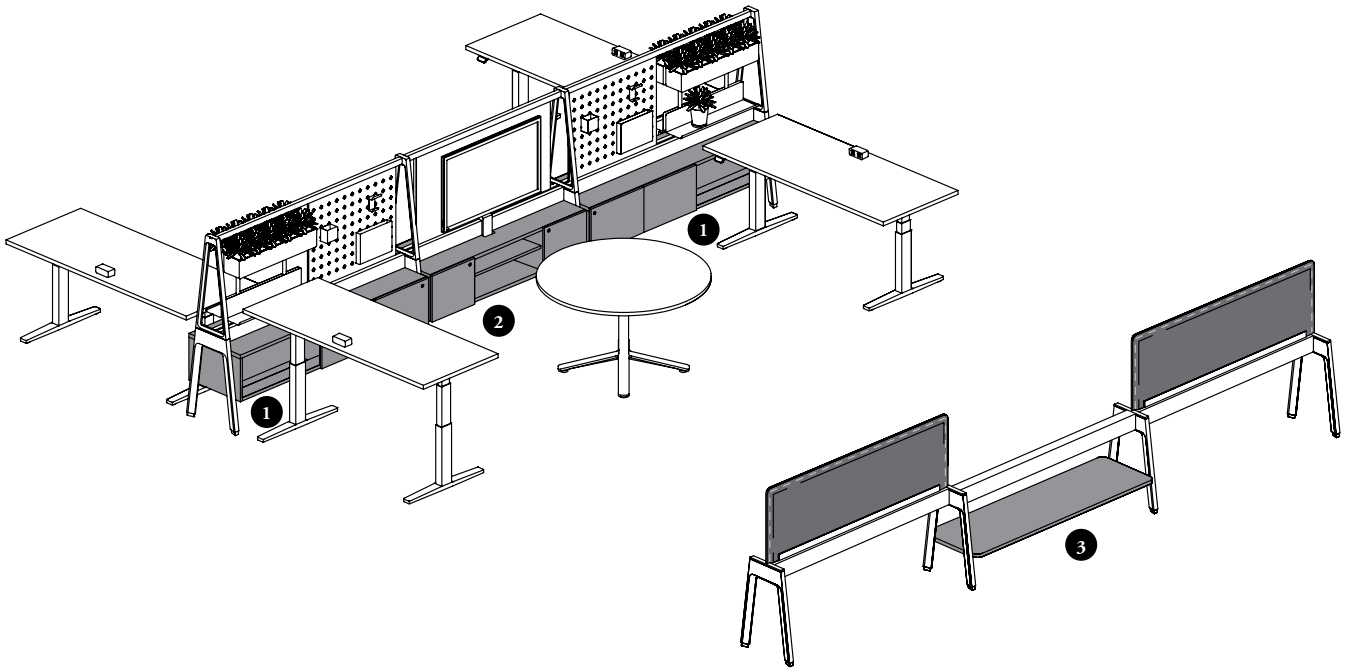

Suspended Storage are offered in three configurations:

1. EZ Suspended Credenzas are offered in on- and off-module format. Credenzas provide high density filing and organized storage under an EZ Fence Beam
2. EZ Suspended Credenza – Media Center combined with Solid Lift and Drop Media Tile (JZTSM) allow media presentation in casual space. This credenza provides storage and wire management solution under an EZ Fence Beam
3. EZ Suspended Shelf provides open storage below EZ Fence Beam

ez suspended credenza basics

The EZ Suspended Credenzas are storage units that can be mounted centered under an EZ Fence Beam or Chicago EZ Fence Beam. They are offered in many configurations to give optimal functionality to one or both sides of the EZ Fence Structure.

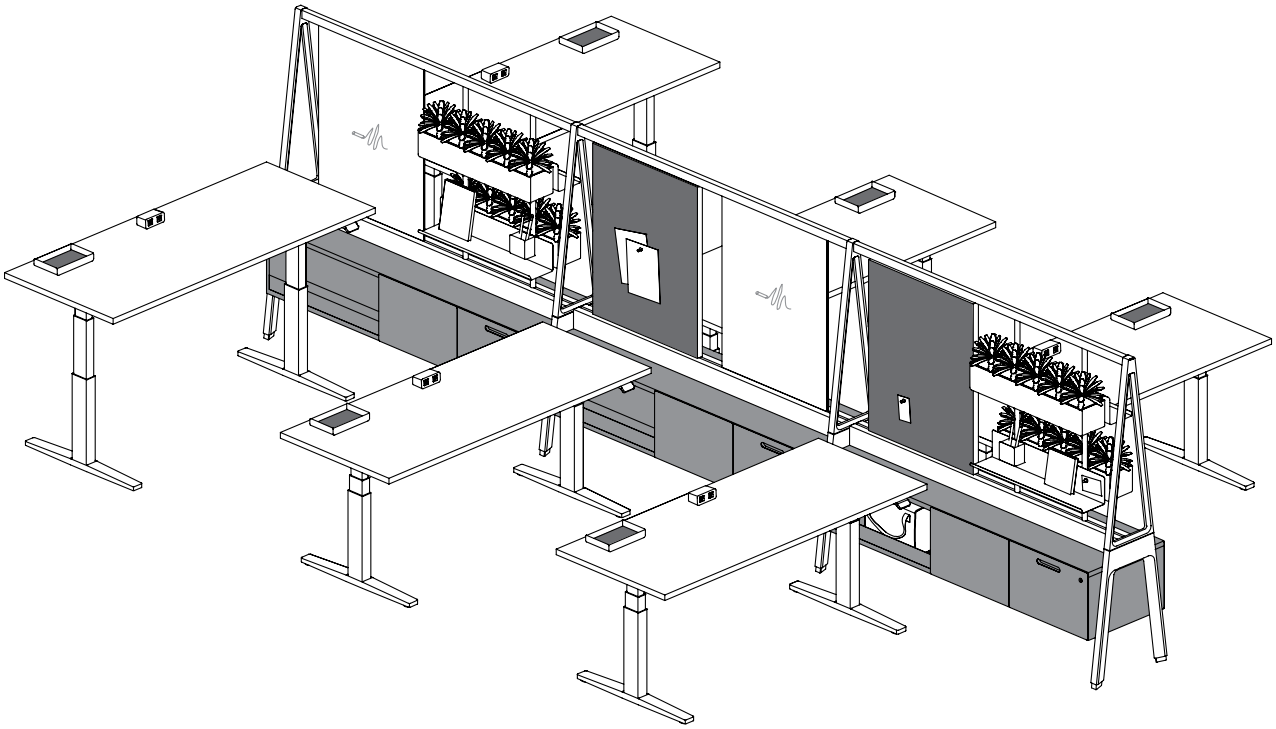

Finishes

Case Finishes: Source Laminate
Metal Front Finishes: Foundation, Mica and Accent
Solid Front Finishes: Source Laminate and Foundation Laminate
Edge Trim Finishes (Laminate Front only): Edge Trim Colors
Pull and/or Bag Holder Finishes (If Applicable): Foundation, Mica and Accent
Leg Mounting Hardware Finishes*: Foundation, Mica and Accent
* Can be specified to match the leg finish on which the storage is mounted (recommended)
Cable Pass-Through Ring Finish: Platinum (Shared Credenza only)
Grommet with Cover Finish: Color coordinate with the case (Media Center Credenza only)
Pass-Through Metal Channel Finish: Match Leg Mounting Hardware finish (Media Center Credenza only)
Metal Scallop Ring Finish: Match Leg Mounting Hardware finish (Media Center Credenza only)

ez suspended credenza basics (continued)

- All EZ Suspended Credenza styles can be mounted on EZ Fence Leg (JZSFS) only
- Compatible with EZ Fence Beam (JZSBB) or Chicago EZ Fence Beam (JZSCB)
- Front Style is available in Metal (M), Metal with Pull (N), Solid (S) or Solid with Pull (T) styles, except for EZ Suspended Credenza – Media Center – Single-Sided available with Solid Front Style (S) only
- Drawers come with Cityline Recessed (C) pull, when Front Style (N or T) is specified. Doors come with **no** pull

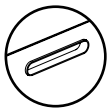

Cityline Recessed (C)

60" – 84" w

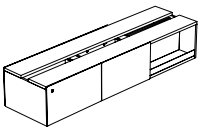

EZ Suspended Credenza – Lateral File and Cubby – Shared (JZBSO)

- Available for Angled (A) EZ Fence Leg Style
- Available in 20" depth only
- Case height is 14"
- Widths include 60" – 84" (6" increments)
- Available in Drawer on Left/Right orientations
- File Drawers are available with lock (Keyed Alike (K) or Keyed Randomly (R)) or no lock (N)

TOP VIEW

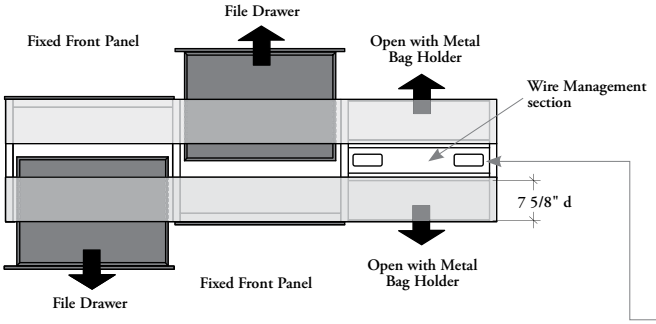

- This credenza must be mounted on-module between two EZ Fence Legs
- Width is nominal
- This style is handed
- One side of the open section have a removable back panel and two cable pass-trough rings at the bottom to allow the passage of wires (base feed, data, height-adjustable table cable) through the credenza and allow access to the beam above

Cable Pass-Through Ring

36" – 48" w

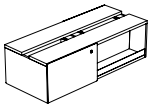

EZ Off-Module Suspended Credenza – Lateral File and Cubby – Shared (JZBDO)

- Available for Angled (A) EZ Fence Leg Style
- Available in 20" depth only
- Case height is 14"
- Widths include 36" – 48" (6" increments)
- File Drawers can be configured left or right configuration
- File Drawers are available with lock (Keyed ALike (K) or Keyed Randomly (R)) or no lock (N)

TOP VIEW

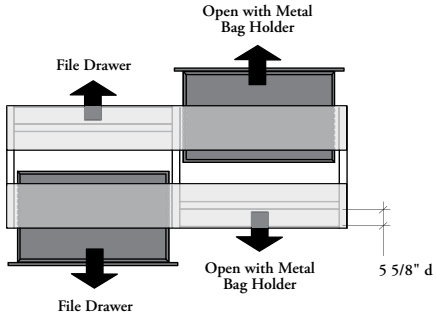

- This credenza must be mounted off-module on an EZ Fence Structure, only one side of the credenza must be mounted on an EZ Fence Leg. The other side is floating (**no** leg or support is needed)
- The actual width of the credenza is 1 1/2" shorter than its nominal dimension
- This style is handed
- **No** wire management through the credenza

ez suspended credenza basics (continued)

48" – 72" w

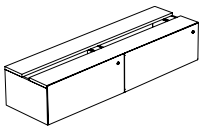

EZ Suspended Credenza – Lateral File – Single-Sided (JZBFF)

- Available for Angled (A) EZ Fence Leg Style
- Available in 20" depth only
- Case height is 14"
- Widths include 48" – 72" (6" increments)
- File Drawers are available with lock (Keyed Alike (K) or Keyed Randomly (R)) or no lock (N)

TOP VIEW

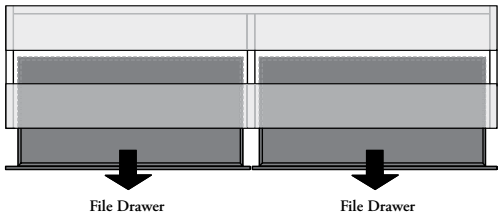

- This credenza must be mounted on-module between two EZ Fence Legs
- Width is nominal
- **No** wire management through the credenza

48" – 60" w

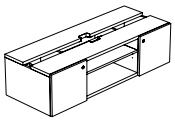

66" – 84" w

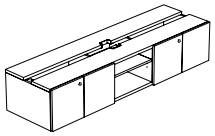

EZ Suspended Credenza – Media Center – Single-Sided (JZBSM)

- Only Solid Front Style (S) is available
- Available for Angled (A) EZ Fence Leg Style
- Available in 20" depth only
- Case height is 14"
- Widths include 48" – 84" (6" increments)
- Hinged Doors are available with lock (Keyed Alike (K) or Keyed Randomly (R)) or no lock (N)

TOP VIEW

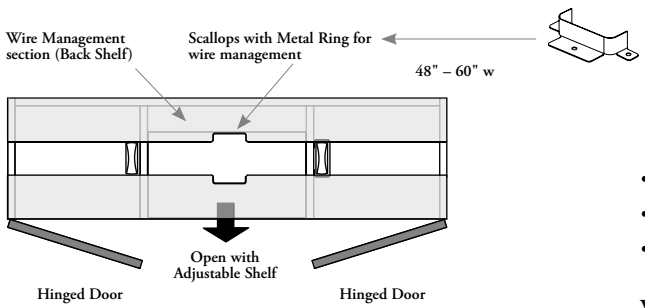

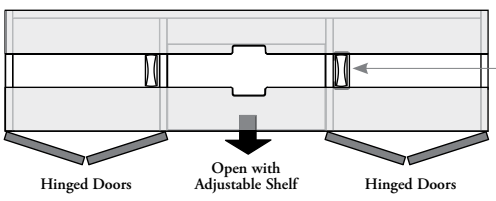

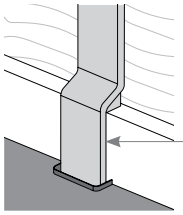

- This credenza must be mounted on-module between two EZ Fence Legs
- Width is nominal
- Comes with an adjustable shelf to manage electronic devices in the open section. The shelf is short at the back to leave a space to route cables

Wire Management Details

- On the credenza top, two scallops with Metal Rings are included to allow wire management between the open section of the credenza and the Lift and Drop Media Tile. The scallops allow the integration of Front Vertical Manager
- In the door sections, two Grommets with Covers and one Pass-Through Metal Channel are included to allow discreet infeed through credenza

Grommet with Cover +

Pass-Through Metal Channel

planning with ez suspended credenzas

The following should be considered when planning with Expansion Cityline EZ Suspended Credenzas.

on-module application

- An EZ Suspended Credenza is mounted centered under the EZ Fence Beam and have the same depth than the EZ Fence Leg
- The credenza is equally shared on each side of the beam
- Three EZ Suspended Credenzas listed below must be used on-module on an EZ Fence Structure:
  - EZ Suspended Credenza – Lateral File and Cubby – Shared (JZBSO)
  - EZ Suspended Credenza – Lateral File – Single-Sided (JZBFF)
  - EZ Suspended Credenza – Media Center – Single-Sided (JZBSM)

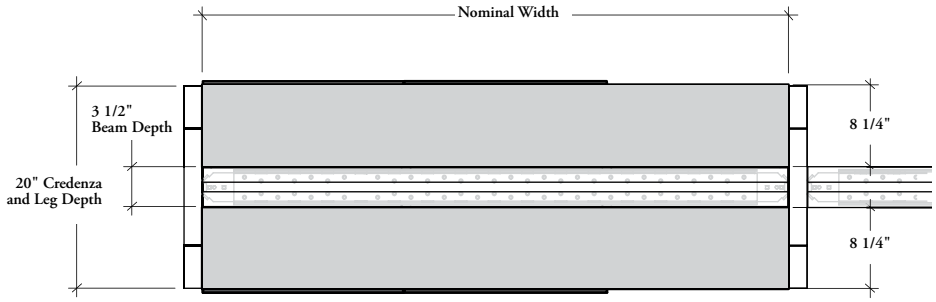

- These credenza are nominal width and will fit between two EZ Fence Legs

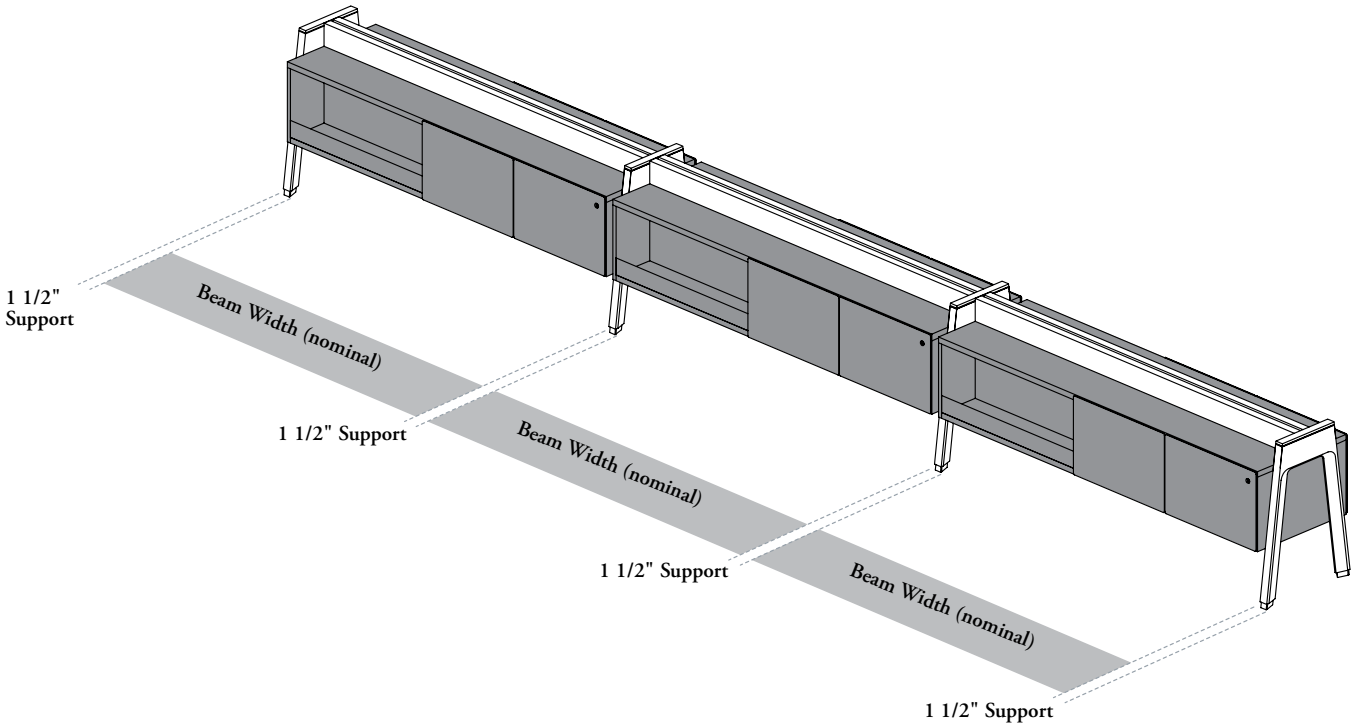

planning with ez suspended credenzas (continued)

off-module applications

- Only EZ Off-Module Suspended Credenza – Lateral File and Cubby – Shared (JZBDO) must be used off-module
- The credenza is equally shared on each side of the beam

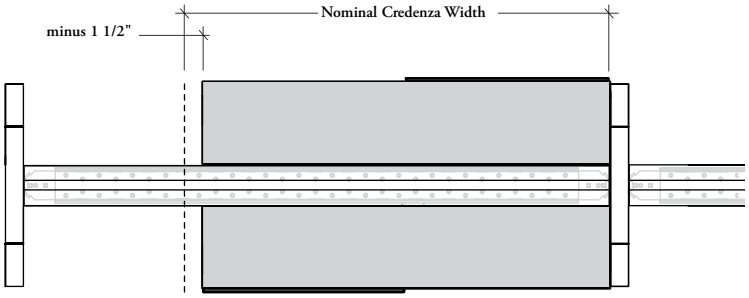

- The actual width of the credenza is 1 1/2" shorter than its nominal dimension

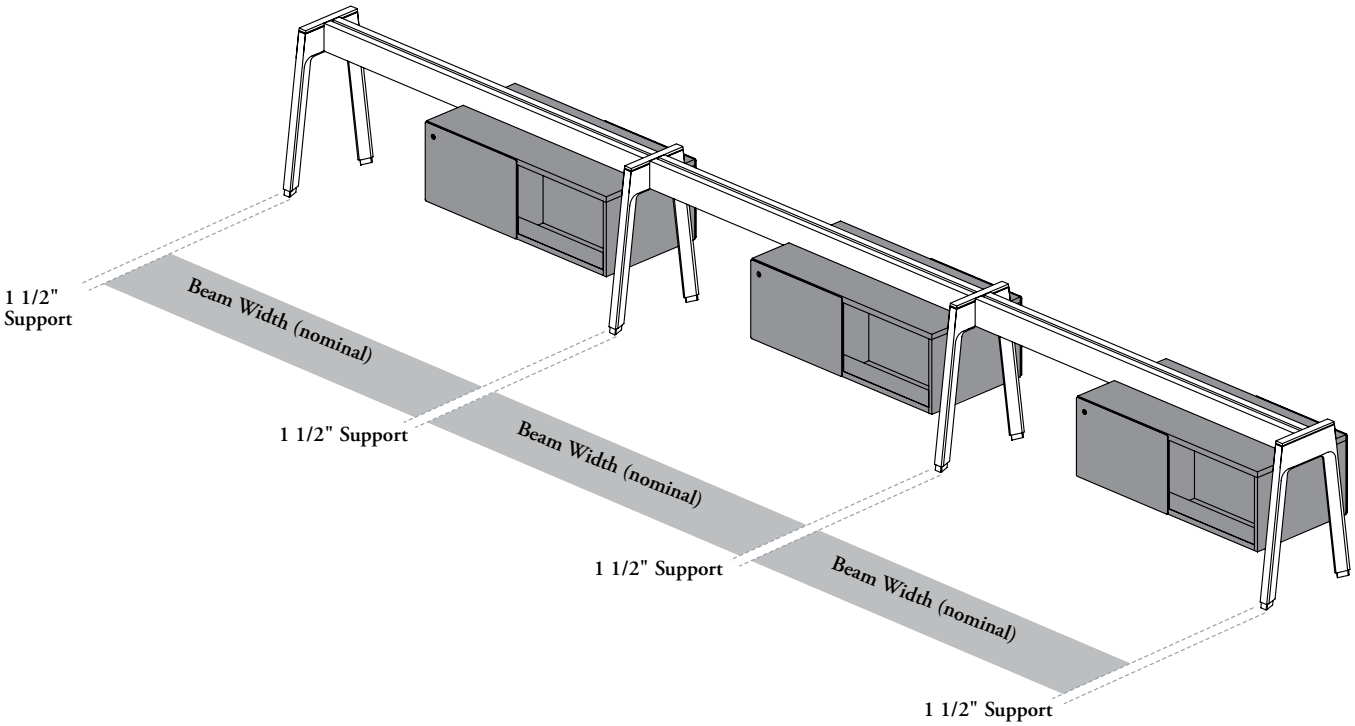

planning with ez suspended credenzas (continued)

off-module applications (continued)

EZ Off-Module Credenza with Height-Adjustable Tables

- The EZ Off-Module Suspended Credenza – Lateral File and Cubby – Shared (JZBDO) can be combined with hiSpace or Navigate Height-Adjustable Tables to create smaller foorprint workstations
- Since the credenza is already 1 1/2" shorter than its nominal dimension, it is easy to combine the credenza with a Height-Adjustable Table while keeping the required 1" pinch gap all around the worksurface

  Example: A 42" wide credenza on a 72" wide EZ Fence Beam leaves a 31 1/2" opening, perfect for a 29" deep table

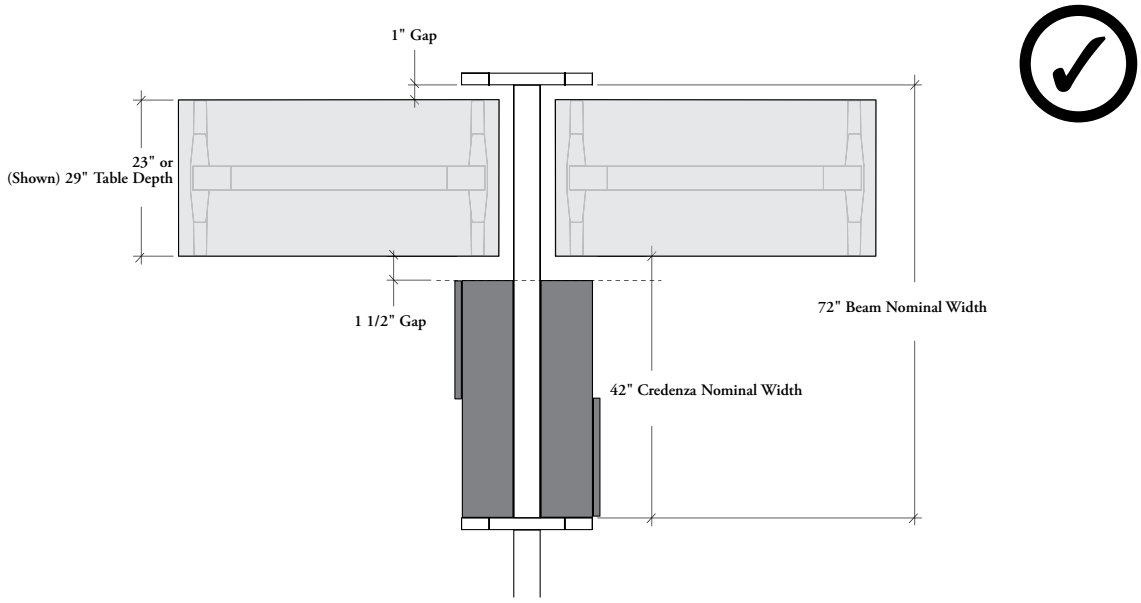

EZ Off-Module Credenza with Run-Off EZ Fence

- An EZ Off-Module Suspended Credenza – Lateral File and Cubby – Shared (JZBDO) is the only credenza that can be used with a Run-Off for EZ Fence (JZWRF)
- The EZ Off-Module Suspended Credenza **cannot** overlap the Run-Off for EZ Fence

  Example: A 42" wide credenza on a 72" wide EZ Fence Beam leaves a 30" nominal opening for a 29" worksurface. The gap will be 2 1/2"

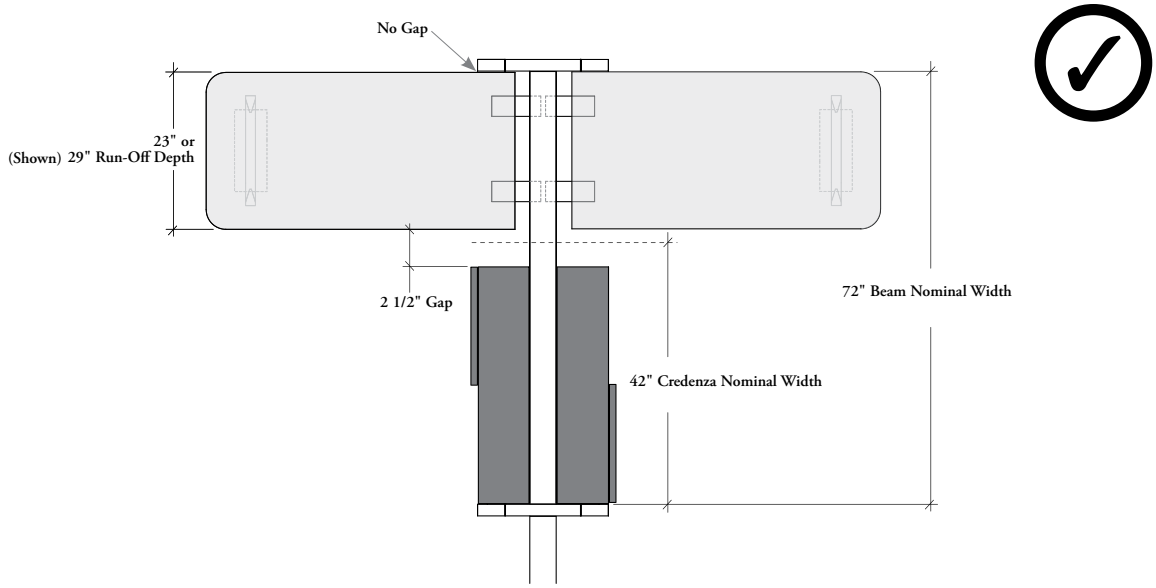

planning with beam-mounted storage

The Suspended Credenzas from Beam-Mounted Storage section can also be mounted to an EZ Fence Beam when supported by Single- or Double-Sided EZ Structural Legs

on-module applications with beam-mounted storage – suspended credenzas

- Two Beam-Mounted Storage styles are compatible with EZ Fence Structure:
  - – Suspended Credenzas (JNBSF, JNBSO, JNBSOO and JNBSC)
  - – Semi-Suspended Credenzas (JNBDF, JNBDO, JNBDOO and JNBDC)
- They must be specified with None Leg Width Reduction (NN)
- Semi-Suspended Credenzas must be specified with One Foot (O) when not attached to a Storage Cabinet for Height-Adjustable Run-Off (JNHSC)
- When mounted on Single-Sided EZ Structural Legs, the depth of the Beam-Mounted Credenza must match the depth of the leg. Beam Configuration must be specified Single-Sided (S)
- When mounted on Double-Sided EZ Structural Legs, the depth of the Beam-Mounted Credenza must be the half depth of the leg. Beam Configuration must be specified Double-Sided (D)

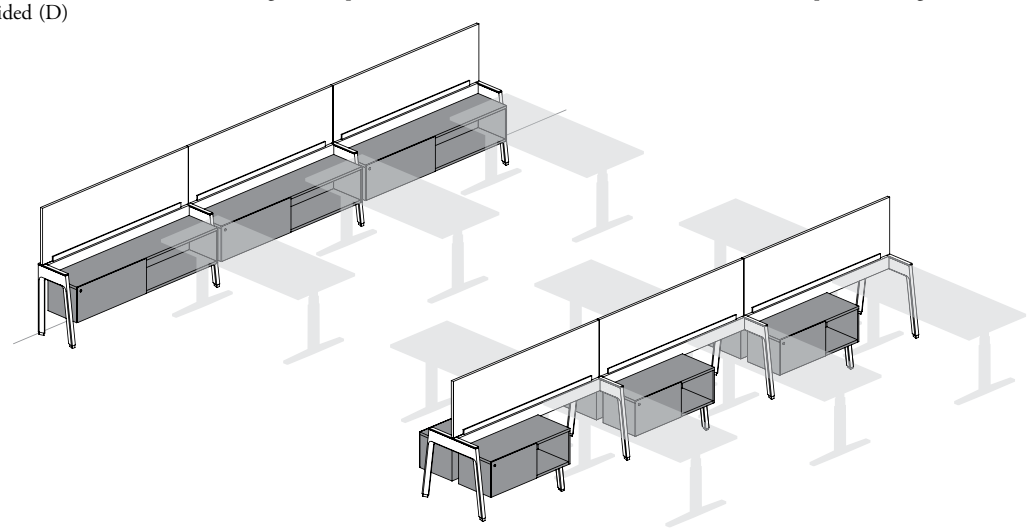

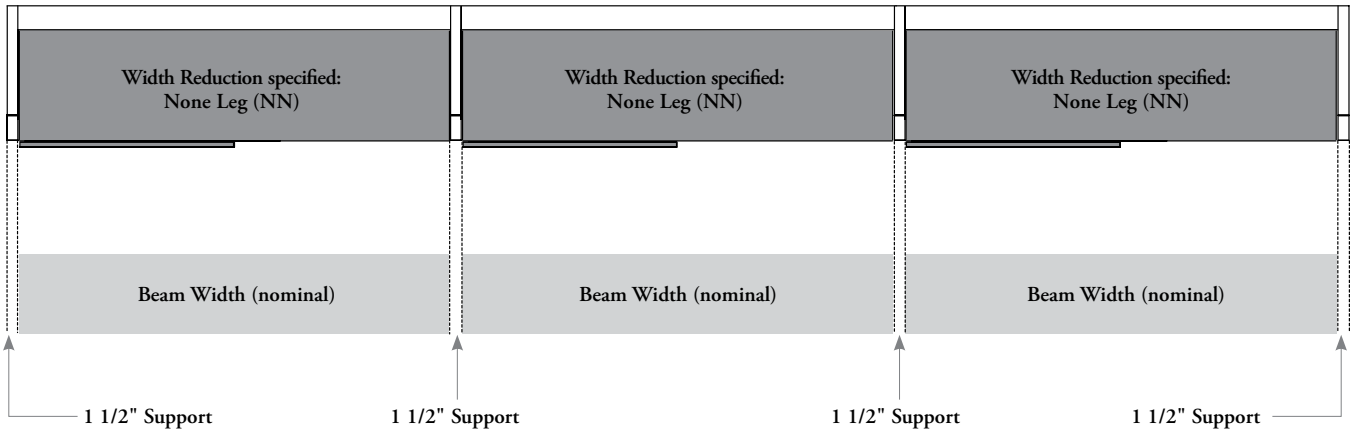

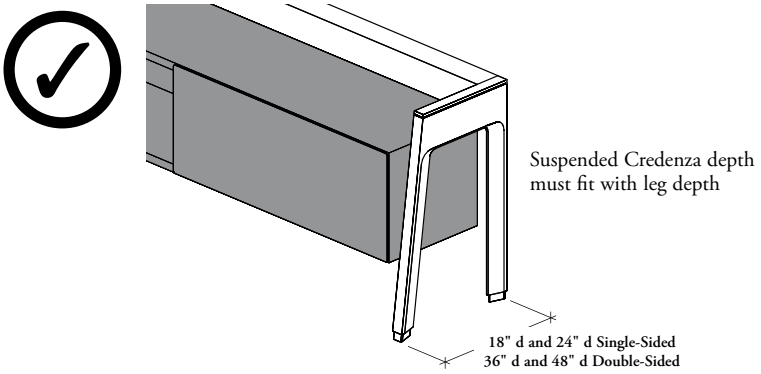

planning with beam-mounted storage (continued)

on-module applications with beam-mounted storage – suspended credenzas (continued)

Combined with Storage Cabinet for Height-Adjustable Run-Off

- Only one Beam-Mounted Storage style can be placed on-module with this application:
  – Suspended Credenzas (JNBSF, JNBSO, JNBSOO and JNBSC)
- Height-Adjustable Run-Off – Bevel Base (JNHB) and Storage Cabinet for Height-Adjustable Run-Off (JNHSC) are compatible with the EZ Fence Structure, but need to be a specific configuration. The Suspended Credenza must always be specified with None Leg Width Reduction (NN)

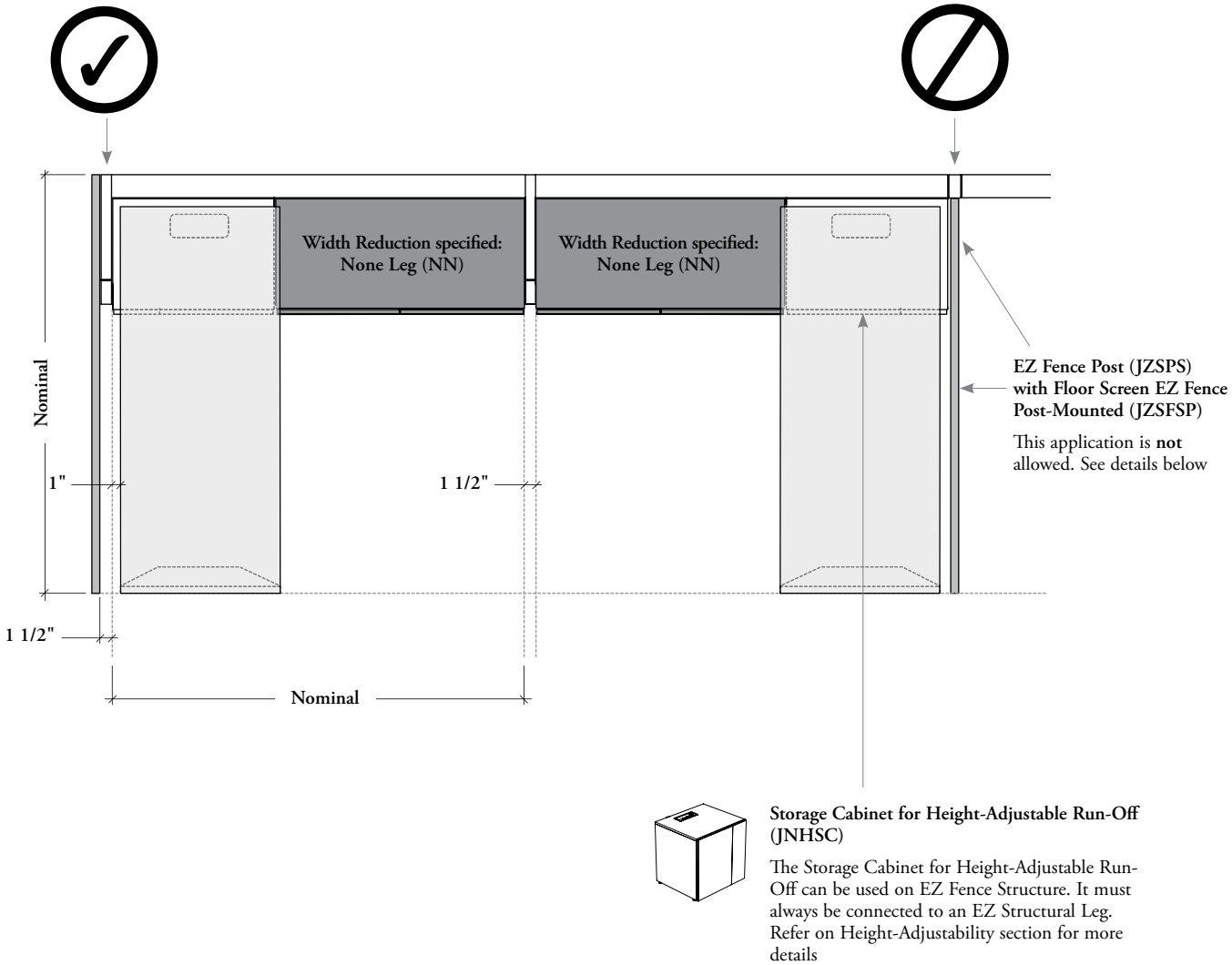

planning with power & data – ez suspended credenza – media center – single-sided

cable managements with ez suspended credenza – media center

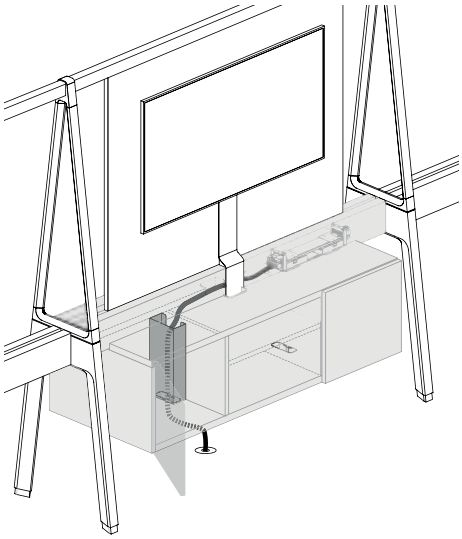

Base Feed/Data Cables

- Base Feed and data cables can be routed from floor to EZ Fence Beam, through the EZ Suspended Credenza – Media Center – Single-Sided (JZBSM)
- In the door sections, two Grommets with Covers and one Pass-Through Metal Channel are included to allow discreet infeed through credenza

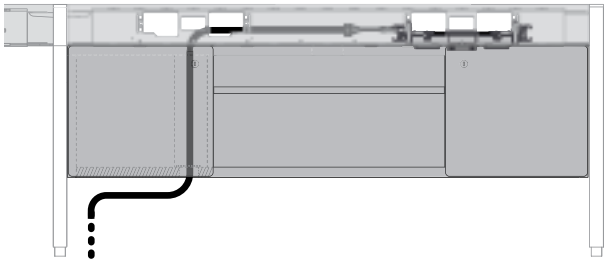

Power Box Position (JNEPB or JNECPB) & Orientation in Media Center

– Facing Down (D) Position (Shown)

- Power Box Facing Down is recommended to discreetly feed electronic device cables
- Power Box in center position is **not** recommended, cables can be visible through the open section and can have interference with electronic devices installed in the credenza

– Facing Side (B) Position

- **Power Box Facing Side is NOT recommended to feed electronic device cables, and cannot be specified in center position when combined with a Media Tile with Front Vertical Manager (F)**

– For more details on Power Box, refer to Lighting. Electrics & Communications section

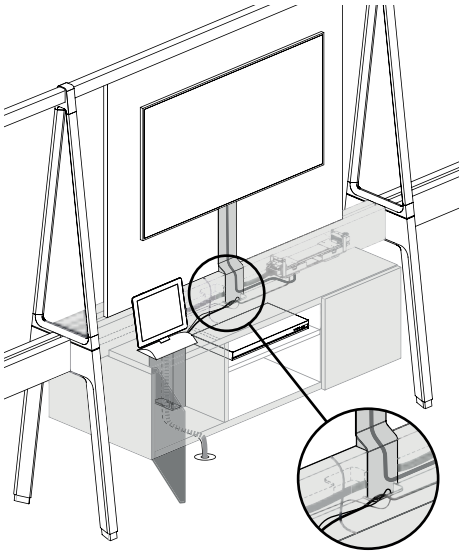

Electronic Devices Cable Management

This EZ Suspended Credenza allows passage of electronic device cables from the open section of the credenza to the top by the two scallops located on both sides of the EZ Fence Beam

drawers & opening sizing chart – ez suspended credenza

The following illustrates Expansion Cityline EZ Suspended Credenza drawers and open sections nominal widths.

EZ Suspended Credenza – Lateral File and Cubby – Shared (JZBSO)

60" Width

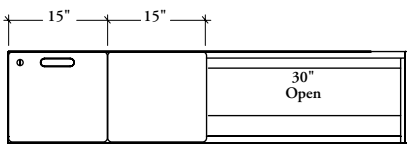

66" Width

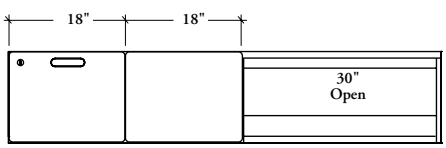

72" Width

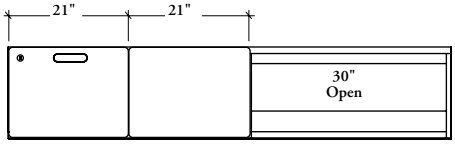

78" Width

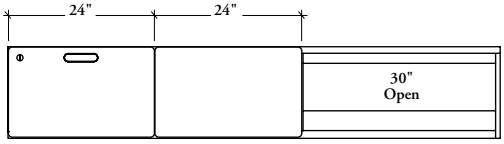

84" Width

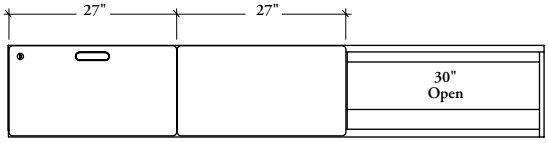

EZ Off-Module Suspended Credenza – Lateral File and Cubby – Shared (JZBDO)

36" Width

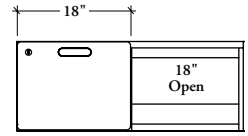

42" Width

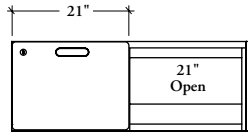

48" Width

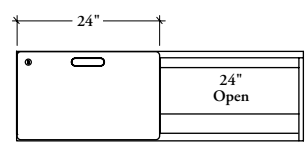

drawers & opening sizing chart – ez suspended credenza (continued)

EZ Suspended Credenza – Lateral File – Single-Sided (JZBFF)

48" Width

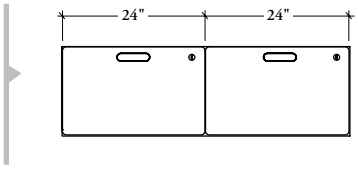

54" Width

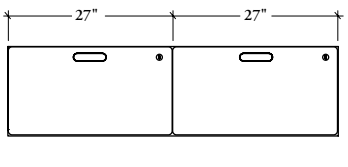

60" Width

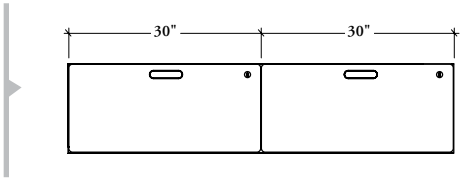

66" Width

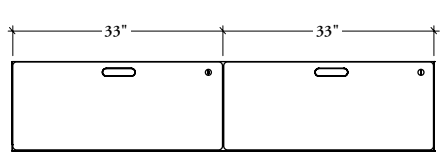

72" Width

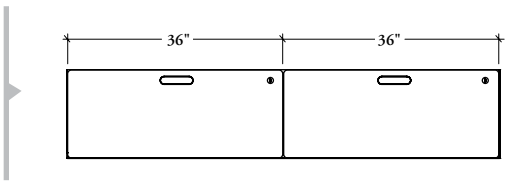

EZ Suspended Credenza – Media Center – Single-Sided (JZBSM)

Single Door

48" Width

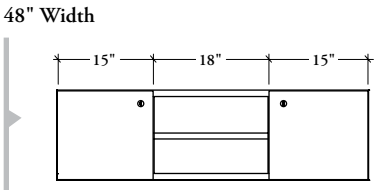

54" Width

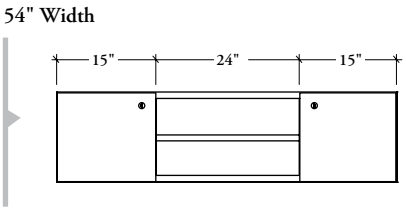

60" Width

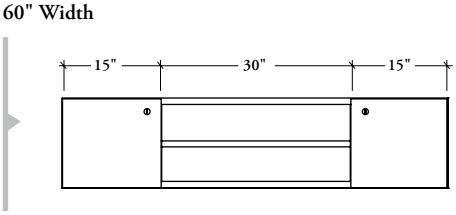

Double Doors

66" Width

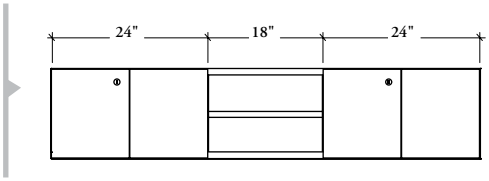

72" Width

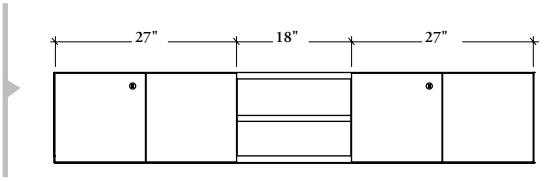

78" Width

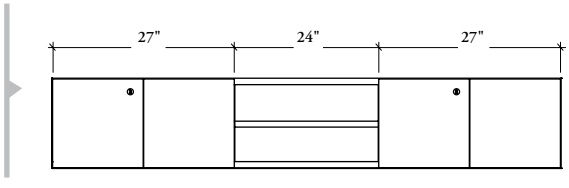

84" Width

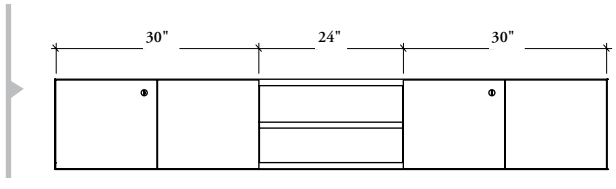

drawers & opening sizing chart – ez suspended credenza (continued)

Lateral file drawer storage capacities are shown below.

- Drawers have full extension slides
- Filing can be front-to-back and/or side-to-side
- The drawer inner-dimensions are listed below
- Hanging File Bars are supplied in sufficient quantity to accomplish all that is shown below

	One Filing Section Front-to-Back	Two Filing Sections Front-to-Back	Side-to-Side
15" wide drawer 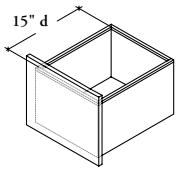	• Letter	n/a	• Legal (JZBSO or JZBFF)
18" or 21" wide drawer 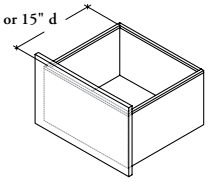	• Letter • Legal	n/a	• Letter (JZBDO) • Legal (JZBSO or JZBFF)
24" or 27" wide drawer 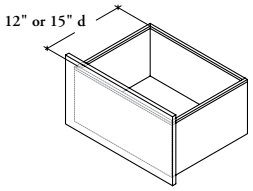	• Letter • Legal	n/a	• Letter (JZBDO) • Legal (JZBSO or JZBFF)
30" or 33" wide drawer 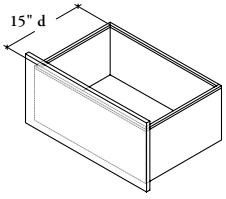	• Letter • Legal	• Letter (30" wide) • Letter (33" wide)	• Legal (JZBSO or JZBFF)
36" wide drawer 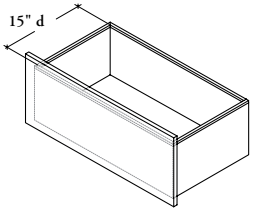	• Letter • Legal	• Letter • Legal	• Legal (JZBSO or JZBFF)

Hanging File Bar (JNFALB) can be ordered separately for replacement of original bars

integrating accessories (optional) – ez suspended credenza

Accessories can be integrated with Expansion Cityline EZ Suspended Credenzas to increase functionality.

Can be specified separately, refer to the Accessories section for details

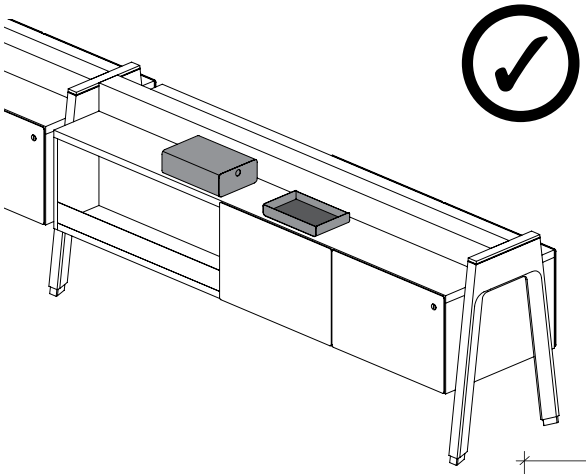

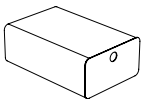

Drawer Module (JNAMD)

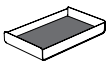

Utility Box (JNAUB)

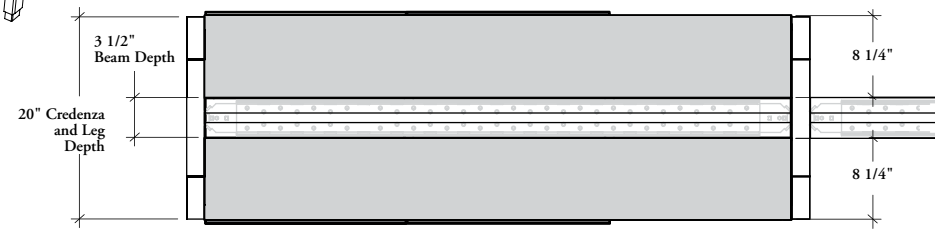

- Only Pocket Drawer Module (JNAMDP) and the Utility Box (JNAUB) can be used on top of an EZ Suspended Credenza
- Seat Pad (JNACF) or Fabric Seat Cushion (JNACU) **cannot** be used on top of an EZ Suspended Credenza

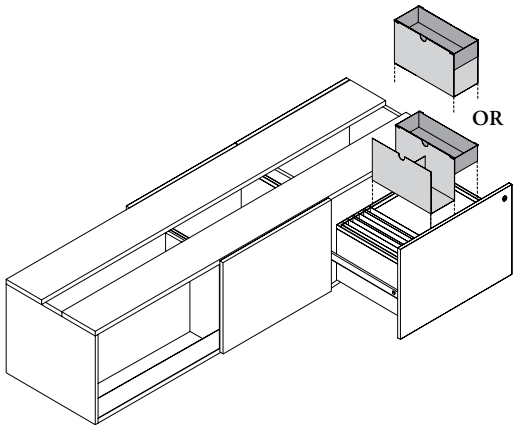

File Drawer Organizer (JNASO)

- The File Drawer Organizer (letter- or legal-size) can be used in file drawers for additional organization, they add functionality to File drawers
- Organizer and drawer depths must be specified accordingly:

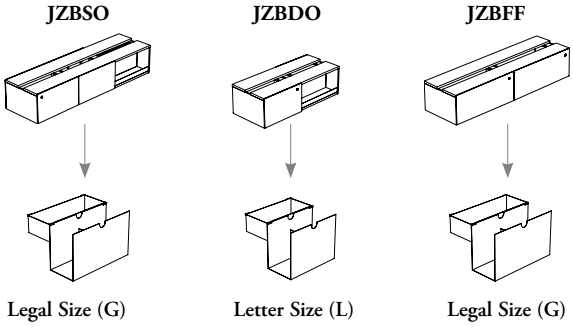

lock chart – ez suspended credenza

If specified, all closed storage come with a lock and key set and can be keyed alike or randomly. A Key Chart must accompany every order, otherwise, orders will be shipped keyed randomly

	number of locks
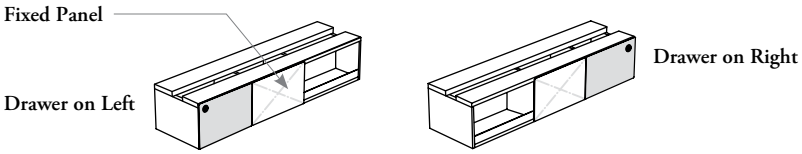 JZBSO	2 x
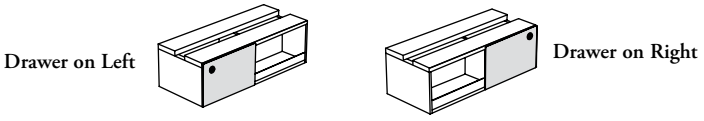 JZBDO	2 x
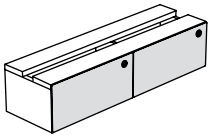 JZBFF	2 x
48" to 60" w 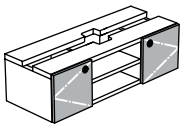	1 x
66" – 84" w 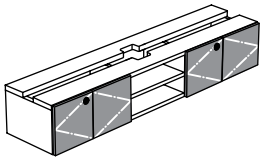 JZBSM	2 x

Lockable Double Doors Lockable Single Door Lockable Single Drawer

ez suspended shelf basics

The EZ Suspended Shelf are fixed between two EZ Fence Legs and provides open storage below an EZ Fence Beam.

- The dimensions listed are actuals
- **Cannot** be installed on EZ Fence Legs – Low Height (JZSFL)

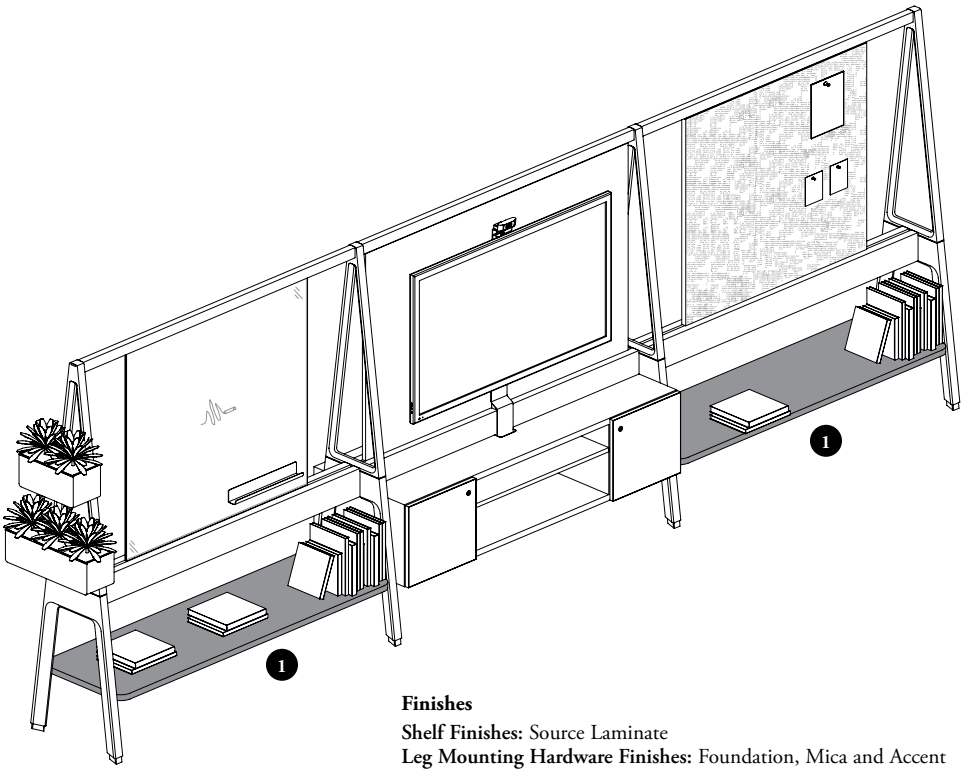

Finishes
Shelf Finishes: Source Laminate
Leg Mounting Hardware Finishes: Foundation, Mica and Accent

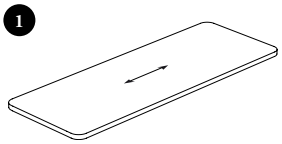

EZ Suspended Shelf – Solid (JZBSH)
- Available 1" thick and two-sided finished
- Only available with 2" radius corners
- Available 18" deep only
- Widths include 48" – 84" (6" increments)
- Can be used under EZ Structural Beam (JZSBB) or Chicago EZ Structural Beam (JZSCB) and fixed between two EZ Fence Legs (JZSFS)

EZ Suspended Shelf Position

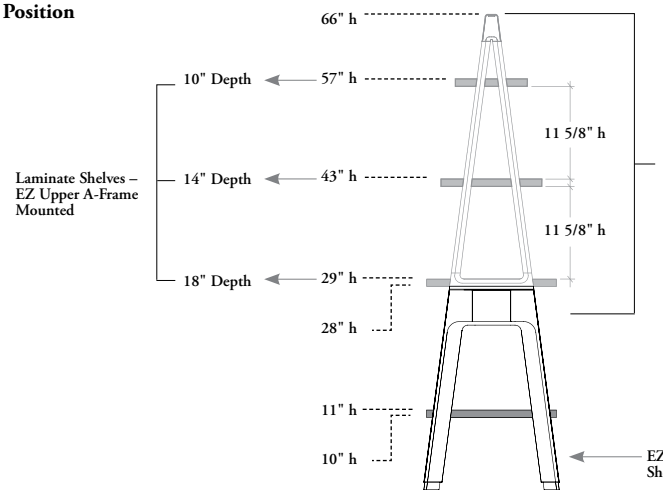

- Can be used in combination with 57" or 66" datum high EZ Upper A-Frame – Shared (JZSUD) or with EZ Upper A-Frame for Laminate Shelves – Shared (JZSULS) (Shown)
- For span and stability restrictions, refer to EZ Fence Structure section for more details

grain direction – ez suspended storage

Below is the grain direction applied on EZ Suspended Storage. Attention the grain direction is important when planning with EZ Suspended Storage.

- Grain/patterns are **not** "centered" on storage unit and shelves
- Includes Source and Foundation Laminate (Standard, Finegrain and Straightgrain)
- The following examples demonstrate this. Laminates **do not** have one-way grain direction but rather a bi-directional grain pattern

es suspended credenzas – shared

Same thing each side

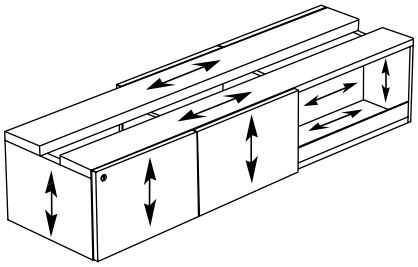

ez suspended credenzas – single-sided

Front

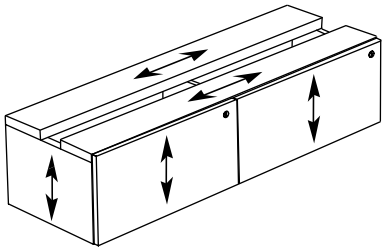

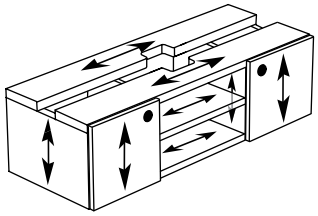

Back

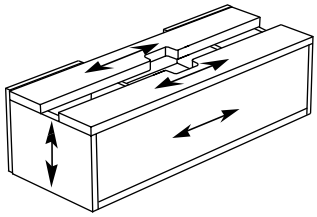

suspended shelf

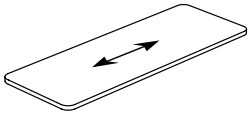

Laminate Grains ⟷ = **Grain Direction** =

desk structures

desk structures

UNDERSTANDING DESK STRUCTURES 211

UNDERSTANDING STRUCTURAL BEAMS 214

STRUCTURAL BEAMS BASICS 217

PLANNING WITH STRUCTURAL BEAM. 218

PLANNING WITH CHICAGO STRUCTURAL BEAM 219

UNDERSTANDING STRUCTURAL POST 220

STRUCTURAL POST BASICS 224

PLANNING WITH STRUCTURAL POST 225

UNDERSTANDING STRUCTURAL LEG & STRUCTURAL POST WITH FRONT LEG 234

STRUCTURAL LEG BASICS 239

PLANNING WITH FULL DEPTH STRUCTURAL LEG 240

PLANNING WITH EXPOSED STRUCTURAL LEGS. 242

PLANNING WITH RECESS DEPTH STRUCTURAL LEG 244

STRUCTURAL POST WITH FRONT LEG BASICS. 249

UNDERSTANDING STRUCTURAL POST WITH FRONT LEG. 250

PLANNING WITH STRUCTURAL POST WITH FRONT LEG 252

UNDERSTANDING SUPPORTING STORAGE. 256

PLANNING WITH END STORAGE STRUCTURAL POST – SUPPORTING STORAGE 258

desk structures (continued)

PLANNING WITH IN-LINE STRUCTURAL POST – SUPPORTING STORAGE 259

PLANNING WITH IN-LINE STRUCTURAL POST WITH FRONT LEG – SUPPORTING STORAGE 263

BENCH STABILIZER BASICS 264

WALL ANCHORED STABILIZER FOR STRUCTURE BASICS 265

PLANNING WITH WALL ANCHORED STABILIZER FOR STRUCTURE . . . 266

TABLE ATTACHED STABILIZER FOR STRUCTURE BASICS 267

PLANNING WITH TABLE ATTACHED STABILIZER FOR STRUCTURE . . . 268

UNDERSTANDING LOW STRUCTURAL LEG – FENCE 270

LOW STRUCTURAL LEG – FENCE BASICS 272

PLANNING WITH LOW STRUCTURAL LEG – FENCE 273

UNDERSTANDING STRUCTURAL LEG – FENCE 276

STRUCTURAL LEG – FENCE BASICS 278

PLANNING WITH STRUCTURAL LEG – FENCE 279

UNDERSTANDING STRUCTURAL LEG – BEAM-MOUNTED CABINET . . 282

UNDERSTANDING STRUCTURAL LEG – PENINSULA 284

STRUCTURAL LEG – BEAM-MOUNTED CABINET & PENINSULA BASICS 285

PLANNING WITH STRUCTURAL LEG – BEAM-MOUNTED CABINET . . 286

desk structures (continued)

PLANNING WITH STRUCTURAL LEG – PENINSULA. 287

UNDERSTANDING STRUCTURAL BEAM COVERS. 289

STRUCTURAL BEAM COVER BASICS. 290

BOTTOM KIT FOR STRUCTURAL BEAM BASICS 291

PLANNING WITH BOTTOM KIT FOR STRUCTURAL BEAM 292

PLANNING WITH STRUCTURAL BEAM COVER – SIDE. 293

PLANNING WITH WIDTH REDUCTION FOR STRUCTURAL BEAM COVER – SIDE 295

PLANNING WITH STRUCTURAL BEAM COVER – TOP 301

PLANNING WITH WIDTH REDUCTION FOR STRUCTURAL BEAM COVER – TOP. 303

PLANNING WITH BOTTOM WIRE COVER FOR STRUCTURAL BEAM – STANDARD 306

PLANNING WITH STRUCTURAL POST COVER – TOP 307

PLANNING WITH STRUCTURAL LEG COVER – TOP & STRUCTURAL LEG BRACKET FOR WORKSURFACE 308

understanding desk structures

A desk structure is composed of single- or double-sided beams, supports and non-mandatory covers. Worksurfaces, screens, storage and accessories can be added to complete the workstation.

EZ compatible

Only Bottom Wire Cover for Structural Beam – Standard (JNDBCB), Wall Anchored Stabilizer for Structure (JNDSWB) and Table Attached Stabilizer for Structure (JNDST) are compatible with EZ Fence Structure, refer to EZ Fence Structure section for more details. All other Desk Structure products **cannot** be mixed with EZ Fence Structure products

- All structural products must be specified separately
- Are available in two heights, low height or standard height (Shown)

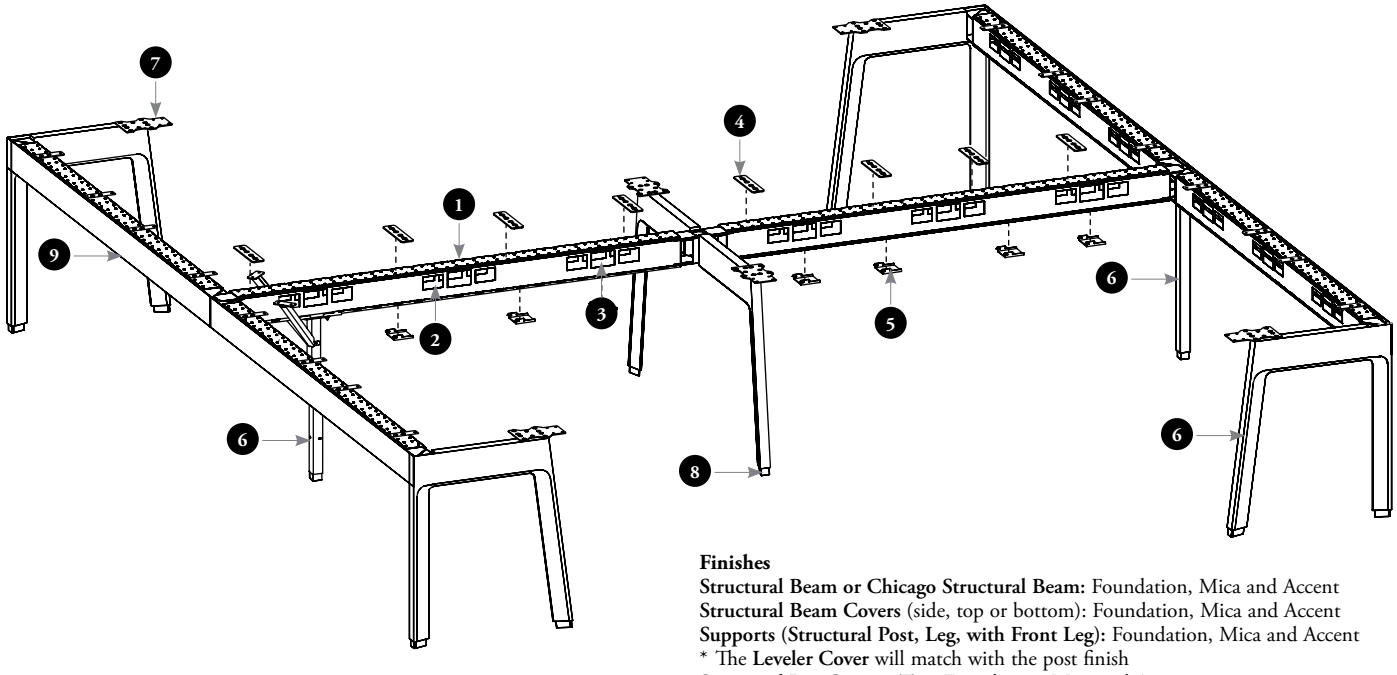

Finishes
Structural Beam or Chicago Structural Beam: Foundation, Mica and Accent
Structural Beam Covers (side, top or bottom): Foundation, Mica and Accent
Supports (Structural Post, Leg, with Front Leg): Foundation, Mica and Accent
* The **Leveler Cover** will match with the post finish
Structural Leg Cover – Top: Foundation, Mica and Accent
Structural Post Cover – Top: Foundation, Mica and Accent
Hardware Finish: Foundation, Mica and Accent
Structural Leg Bracket for Worksurface: Ebony (52)

desk structure

The desk structure consists of the following base components:

1. Structural beams for supporting worksurfaces, screens, storage and desk accessoiries
2. Outlet cut-outs to accept Receptacle Outlets
3. Data/Communication cut-out to accept Voice/Data Faceplates
4. Worksurface Bracket (as specified) for mounting worksurface on beam
5. Facing Down Brackets providing cable support

Included with Structural Beams

6. Structural Leg (Shown) or Post (Shown) receiving beam ends and supporting worksurfaces, screens and storage
7. Structural Leg Bracket (Optional – Shown) for mounting worksurfaces on leg or Structural Leg Cover – Top (Optional) for covering the top exposed sections of the Structural Leg when not covered with a worksurface

Included with Structural Leg or ordered separately for re-configuration purposes

8. Levelers for a workstation leveling range of 3" (-3/16", +2 13/16")
9. Top, Side (Shown) or Bottom Structural Beam Cover (Optional) for covering the exposed surfaces of the structural beams

understanding desk structures (continued)

Desk Structure can be used to create fully concealed underneath worksurface or fully exposed structural beam environments.

Can be planned in two heights, offering their own characteristics:

28" or 29" standard height desk structure

28" high desk structure can be used fully exposed, such in casual or height-adjustable application, and at 29" high when used with fixed-height worksurfaces

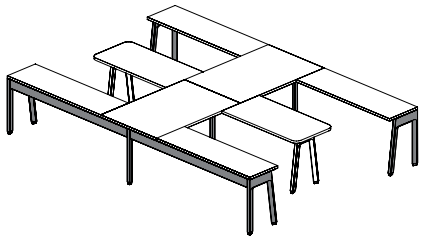

Desk Structure

working dynamic

- Standard height structure allows individual and collaborative working depending of the worksurface configuration
- When used with hiSpace or Navigate Height-Adjustable Tables, the tables must be placed between the legs

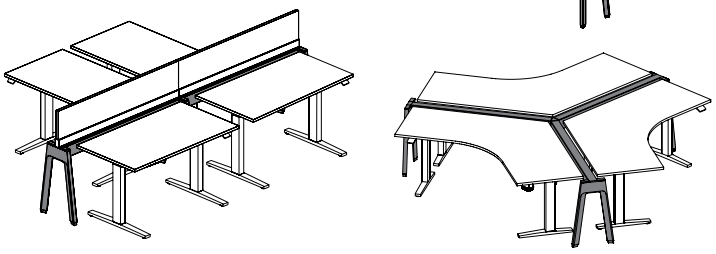

Height-Adjustability

space privacy

Standard height structure allows the mounting of an Add-On Screen – Beam-Mounted and a Modesty Panel. Elevated Screen, Floor Screen can also be added for more space division

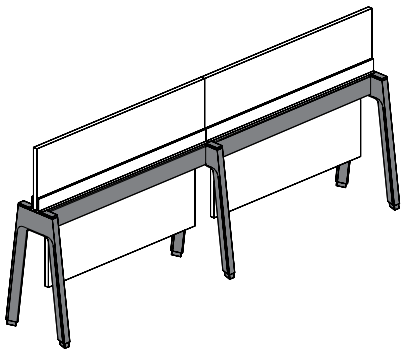

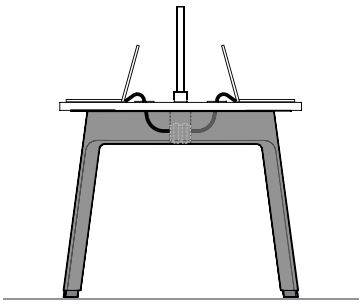

Facing Side Power

power

- **Facing side power** is optimal for a fully concealed or semi-exposed beam application by giving direct access to user
- **Facing down power** is optimal for a fully exposed structural beam application such with hiSpace or Navigate Height-Adjustable Table application by using smaller footprint for the workstation

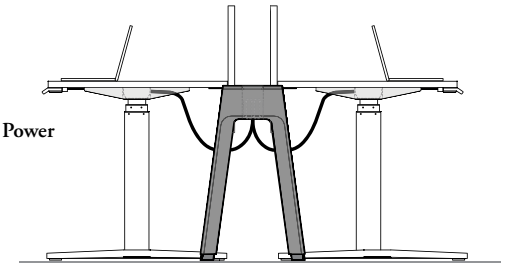

Facing Down Power

understanding desk structures (continued)

18" low height desk structure

Can be used fully exposed only for Height-Adjustable application

working dynamic

Low height structure allows to plan in Fence application only. Combined with hiSpace or Navigate Height-Adjustable Tables, it offers full adjustability without any interference with the structure of the facing side power

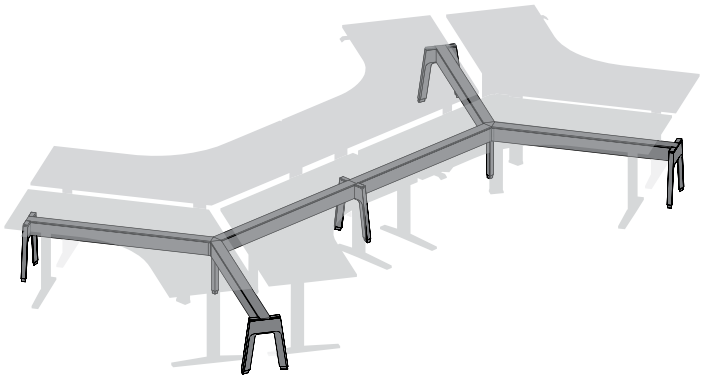

space privacy

Low height structure allows the mounting of Add-On Screen – Beam-Mounted for space division. The structure height acts like a modesty panel in this application

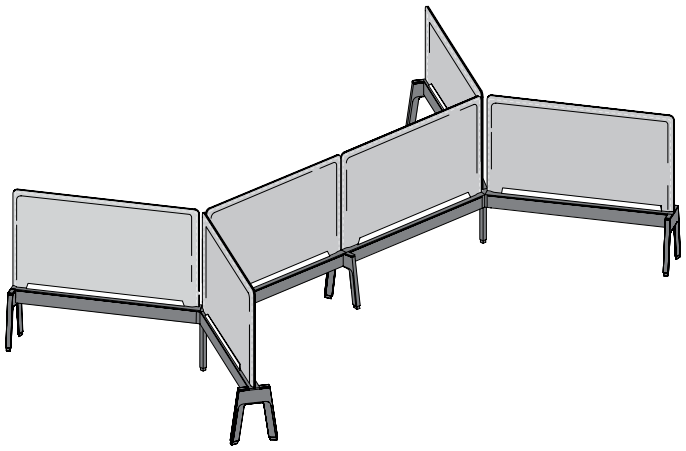

power

Facing side power is optimal for a fully exposed beam – low height application by giving direct access to user and **not** interfering with the adjustment of the hiSpace or Navigate Height-Adjustable Table

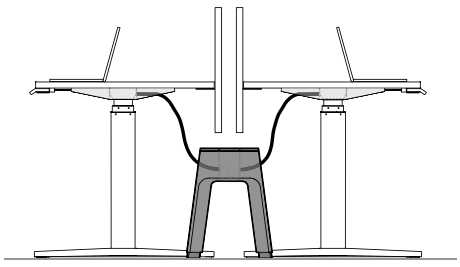

understanding structural beams

- Two styles are available: Structural Beam (JNDBB) or Chicago Structural Beam (JNDCB). Both have the same functions and features except for the compatibility with electrical components which must be specified accordingly
- The two styles must **never** be mixed on the same layout
- Can be concealed, semi-exposed or exposed

structural beams fully concealed underneath worksurfaces

- Worksurfaces hide completely the top of structural beams
- Structural Beam Cover – Side (JNDBCS) can be added on either side for aesthetic enhancement but is **not** mandatory
- Can be applicable with Single- or Double-Sided configuration

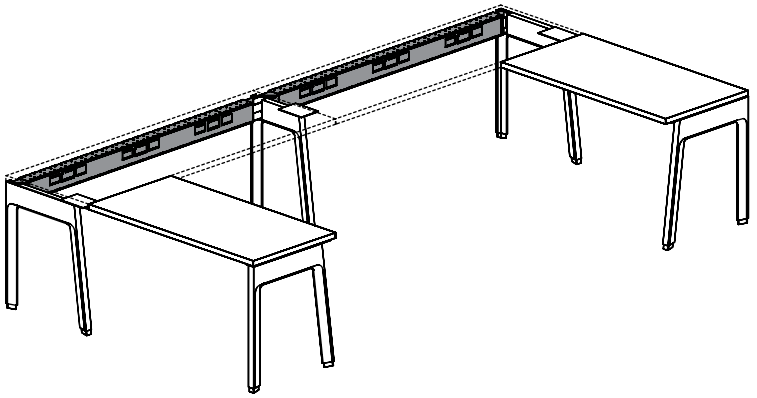

semi-exposed structural beams

- Worksurfaces hide a portion of the structural beam top
- Structural Beam Cover – Top (JNDBTC) covers the remaining width of the structural beam top
- Structural Beam Cover – Top (JNDBTC) can be replaced with any Add-On Screen – Beam-Mounted (JNSA_B)
- Structural Beam Cover – Side (JNDBCS) must be ordered full width inside the workstation
- Structural Beam Cover – Side (JNDBCS) can be added outside the workstation for aesthetic enhancement but is **not** mandatory when not visible
- Can be applicable with Single- or Double-Sided configuration

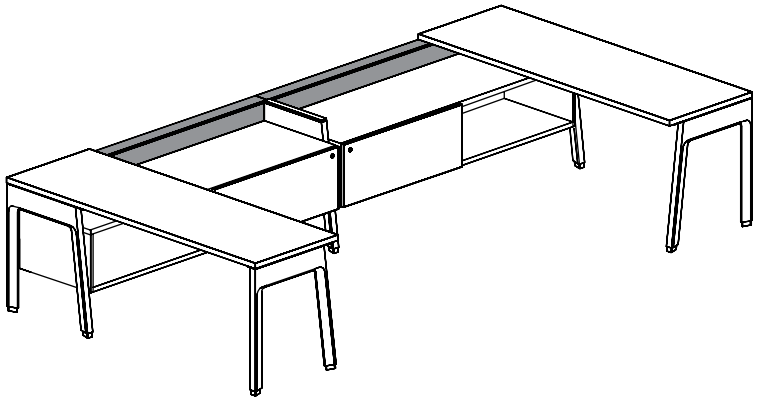

fully exposed structural beams

- A variety of products offers the possibility to fully expose the structural beam
- Structural Beam Cover – Side and Top (JNDBCS and JNDBTC) are mandatory
- Bottom Wire Cover for Structural Beam – Standard (JNDBCB) are recommended to prevent people from reaching wires inside the beam
- Structural Beam Cover – Top (JNDBTC) can be replaced with any Add-On Screen – Beam-Mounted (JNSA_B)
- Can be applicable with Single- or Double-Sided configuration, but only the Double-Sided configuration can be used with Structural Leg – Fence in casual spaces (Shown)
- Wall Anchored Stabilizer for Structure (JNDSWB) can be required to stabilize a single-sided configuration against a wall
- Table Attached Stabilizer for Structure (JNDST) can be required to stabilize a single-sided configuration for a corridor application

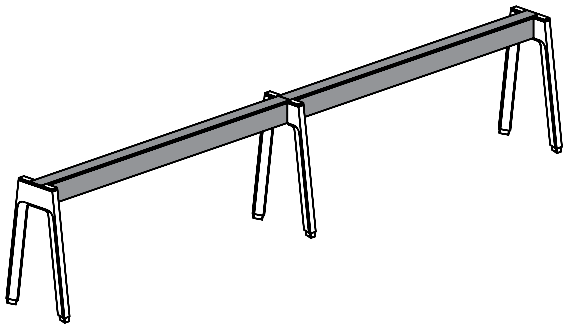

understanding structural beams (continued)

- Structural Beams are available in two configurations, Single- and Double-Sided. The features for both configurations are the same but the end connectors are different
- Holds and distributes power and data
- Supports worksurfaces, screens, storage and accessories

single- and double-sided beam connections

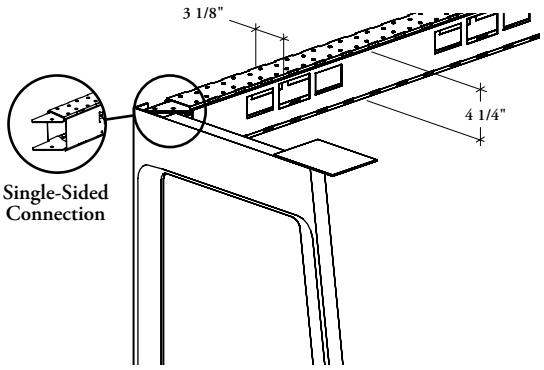

Single-Sided beam runs along the back of Single-Sided Supports

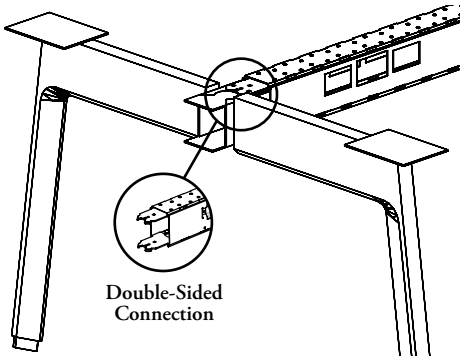

Double-Sided beam runs centered between Double-Sided Supports

no creep factor

- The structural beams are concealed underneath the worksurface, therefore, there is no creep factor at the back of a workstation
- The structural beams nominal dimensions include the Support widths, therefore, it is completely integrated inside the footprint of a workstation

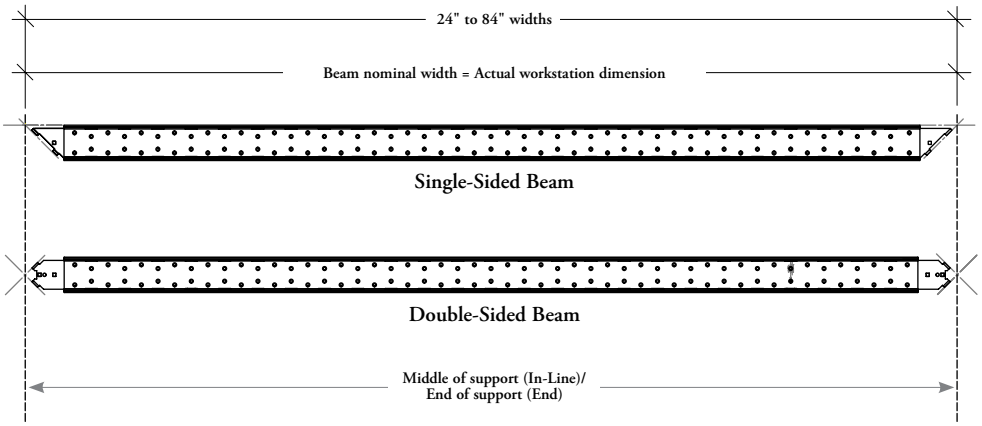

understanding structural beams (continued)

- The Structural Post, Structural Post with Front Leg or Structural Leg are required on both ends and between two structural beams
- Single- and Double-Sided Beams are **not** compatible with all support styles

supports compatible with single-sided structural beams only

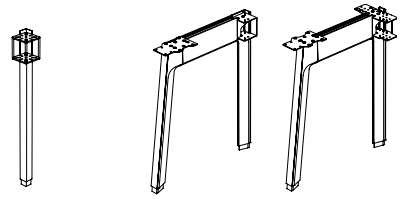

Structural Post – Corner

Structural Legs – Single-Sided

supports compatible with double-sided structural beams only

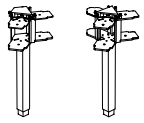

Low Structural Post – 120°

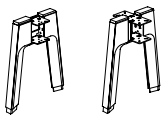

Low Structural Leg – Fence

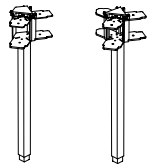

Structural Post – 120°

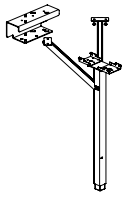

Structural Post – Recessed with Long Span Kit

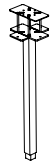

Four-Way Exposed Structural Post – Double-Sided

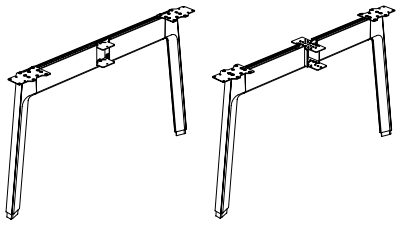

Structural Legs – Double-Sided

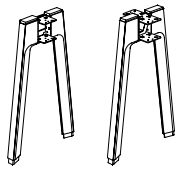

Structural Leg – Fence

Structural Leg – Peninsula

supports compatible with single- and/or double-sided structural beams

End Structural Post – Storage

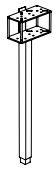

In-Line Structural Post – Single-Sided

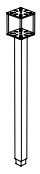

In-Line Structural Post – Double-Sided

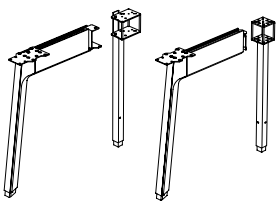

Structural Posts with Front Leg

Structural Leg – Beam-Mounted Cabinet

Structural Posts with Front Leg and In-Line Structural Post – Single-Sided are unidirectional: Single- and Double-Sided Beams **cannot** interchange their position on the Post connector

structural beams basics

The appropriate selection of Beams and supports allows you to create multidirectional environments.

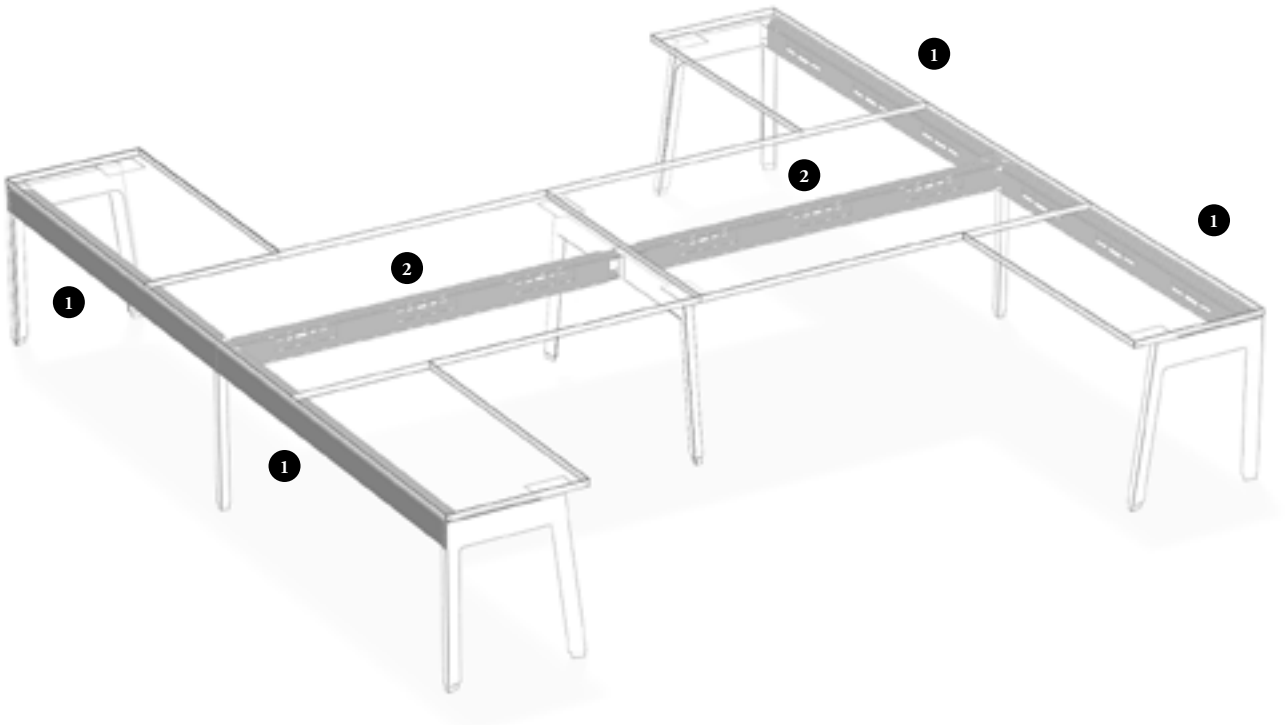

Structural Beams (JNDBB) or Chicago Structural Beam (JNDCB)

- Can be specified Single- or Double-Sided depending on position in the layout
- Available in widths 24" to 84" (6" increments)
- Runs just underneath the 29" high worksurface in standard height (28") or at 18" in low height application
- Facing Down Brackets are included and installed under the structural beam to retain cables. The quantity required varies by size
- Worksurface brackets are also included when specified. The quantity required varies by size
- Include cut-outs for insertion of power and data module. It also allows wire management inside the beam to carry power and data from the in feed to the last workstation of the run
- Can support:
  - All worksurfaces (JNW_)
  - Beam-Mounted Modesty Panel (JNABMS)
  - All Add-On Screens – Beam-Mounted (JNSA_B)
  - All Elevated Screens – Beam-Mounted (JNSE_B)
  - Corner Elevated Screen – Beam-Mounted (JNSECFB)
  - All Floor Screens – Beam-Mounted (JNSF_B)
  - All Suspended or Semi-Suspended Beam-Mounted Cabinets (JNB_)
  - Beam-Mounted Shelf (JNBBW)
  - Beam-Mounted Cabinet (JNBBLO)
  - All Beam Towers (JNFB_)

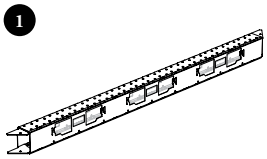

Single-Sided (S)

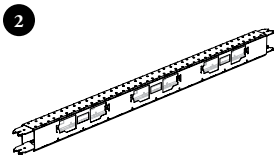

Double-Sided (D)

Structural Beam (JNDBB)

- Compatible with standard electrical components only

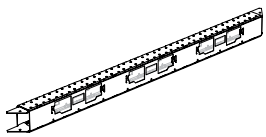

Single-Sided (S)

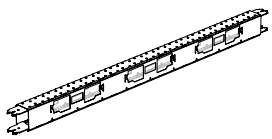

Double-Sided (D)

Chicago Structural Beam (JNDCB)

- Compatible with Chicago electrical components only

planning with structural beam

The following should be considered when planning with Expansion Cityline Structural Beams.

structural beam – electrical/communication outlet locations

- The Structural Beam (JNDBB) is designed to receive Power Box (JNEPB), Communication Extender Plate (JNEDE) and data faceplates only
- For each power box location, two large openings on each side of the Structural Beam allow to mount Receptacle Outlets (JNEPRO)
- 24" wide beam **cannot** receive a Power Box (JNEPB)
- **Cannot** be used with Chicago electric products.

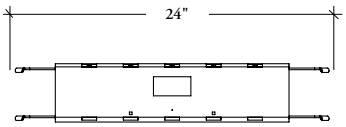

Center
with Data Cut-Out only

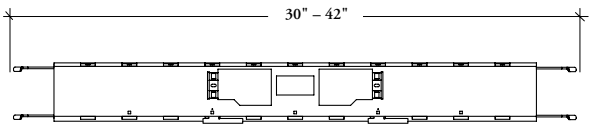

Center
with Power & Data Cut-Outs

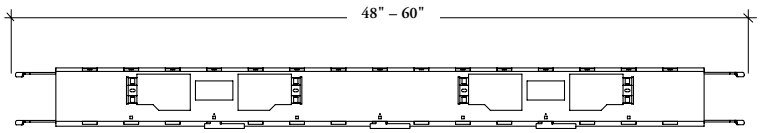

Left & Right
with Power & Data Cut-Outs

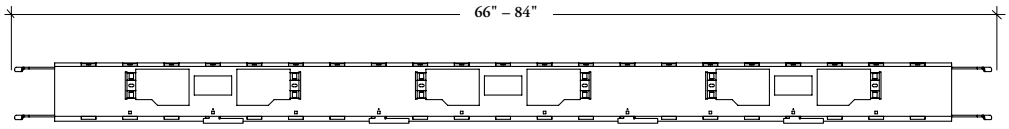

Left & Center & Right
with Power & Data Cut-Outs

Cut-Out for Data

- A communication opening of 2.71" x 1.28" (69 mm x 35 mm) is provided on each side of the beam
- This cut-out is used with Communication Extender Plate (JNEDE) and data faceplate

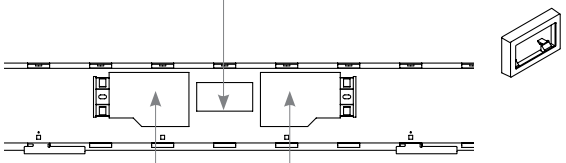

Cut-Outs for Power

These cut-outs provide access to mount Receptacle Outlets (JNEPRO) on a Power Box (JNEPB)

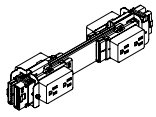

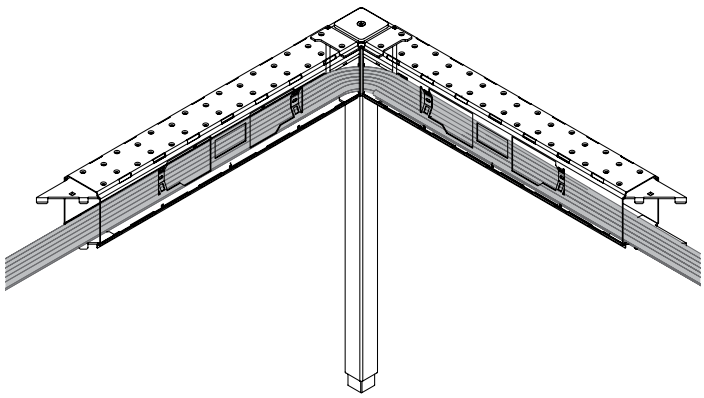

- The Structural Beam and Structural Leg or Post allow cable routing inside the workstation
- The beam data capacity varies dependently of the wire category specified. Refer to Understanding Data/Communication cables capacity on page 763
- The electric products are **not** included with beams. They must be specified separately
- For more details on Receptacle Outlets, Power Box and Communication Extender Plates, refer to the Lighting, Electrics & Communications section

planning with chicago structural beam

The following should be considered when planning with Expansion Cityline Chicago Structural Beams.

chicago structural beam – electrical/communication outlet locations

- The Chicago Structural Beam (JNDCB) is designed to receive Chicago Power Box (JNECPB), Communication Extender Plate (JNEDE) and data faceplates only
- For each power box location, two large openings on each side of the Chicago Structural Beam allow access to the receptacles of Chicago Power Box
- 24" wide beam **cannot** receive a Chicago Power Box (JNECPB)
- **Cannot** be used with standard electric products.

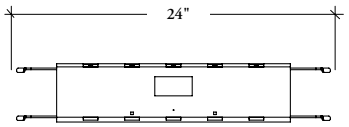

Center
with Data Cut-Out only

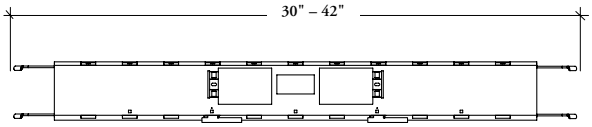

Center
with Power & Data Cut-Outs

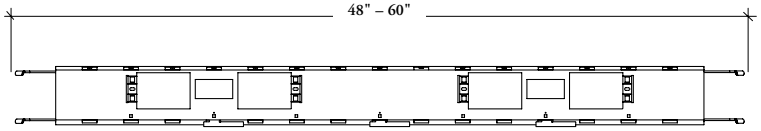

Left & Right
with Power & Data Cut-Outs

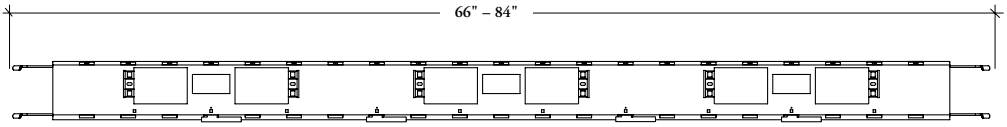

Left & Center & Right
with Power & Data Cut-Outs

Cut-Out for Data

- A communication opening of 2.71" x 1.28" (69 mm x 35 mm) is provided on each side of the beam
- This cut-out is used with Communication Extender Plate (JNEDE) and data faceplate

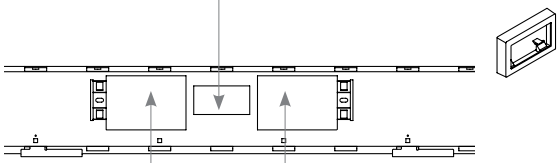

Cut-Outs for Power

These cut-outs provide access to mount receptacle outlets included on a Chicago Power Box (JNECPB)

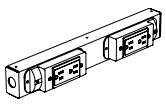

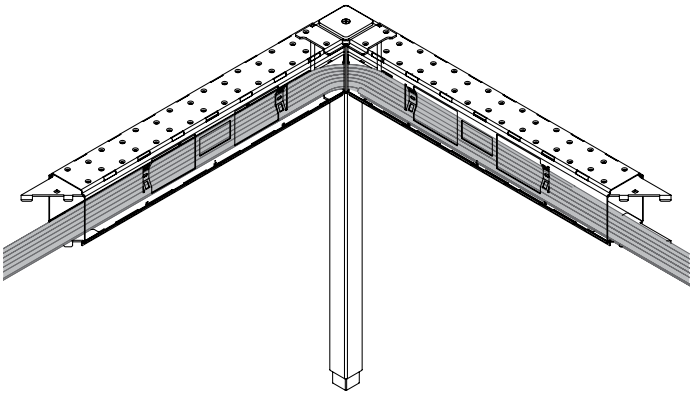

- The Chicago Structural Beam and Structural Leg or Post allow cable routing inside the workstation
- The beam data capacity varies dependently of the wire category specified. Refer to Understanding Chicago Data/Communication cables capacity on page 766
- The Chicago electric products are **not** included with beams. They must be specified separately
- For more details on Chicago Power Box, Communication Extender Plates and Chicago electric products, refer to the Lighting, Electrics & Communications section

understanding structural post

Structural Posts support and connect Structural Beams. They are required for adding or changing Structural Beams direction.

structural post & low structural post

Installed between two, three, four perpendicular or 120° beams (JNDBB or JNDCB) to provide frame support

1. Eight beam connections can be specified: Corner, End – Storage, Recessed with Long Span Kit, In-Line – Single-Sided Beam (Shown), In-Line – Double-Sided Beam, Four-Way – Double-Sided Beam for perpendicular applications, Two- or Three-Way – Double-Sided Beam for 120° applications
2. Comes with vertical square post
3. Screws and nuts are also included to secure the beam connection to the Structural Post connector
4. **Storage Bracket** option is available in End – Storage, In-Line – Single-Sided Beam and In-Line – Double-Sided Beam. The bracket provides more stability when used in supporting storage application. For more details, refer on page 258
5. Comes with a Leveler Cover hiding the black leveler for a more refine aesthetic

   Provides a leveling range of 3" (-3/16", +2 13/16")

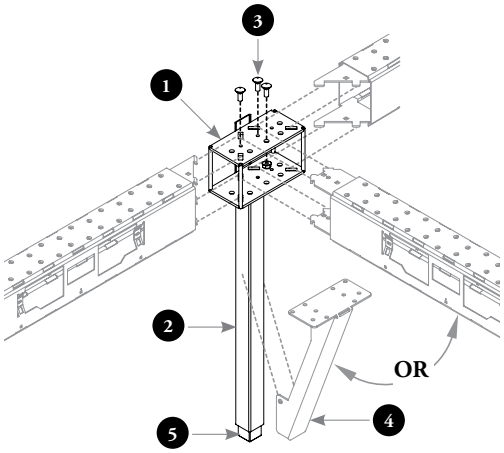

Eight Structural Post configurations are available:

corner configuration

- Two-Way 90° configuration
- Connects two Single-Sided Beams only

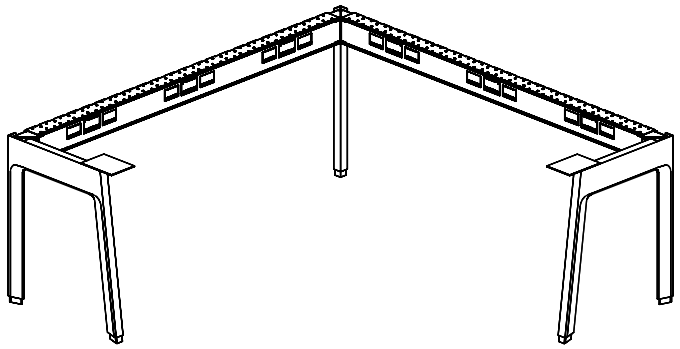

end – storage configuration

- Used in end of runs with Beam Towers – End of Station only
- Supports one Single- or Double-Sided Beam
- For more details on this application, refer to page 256

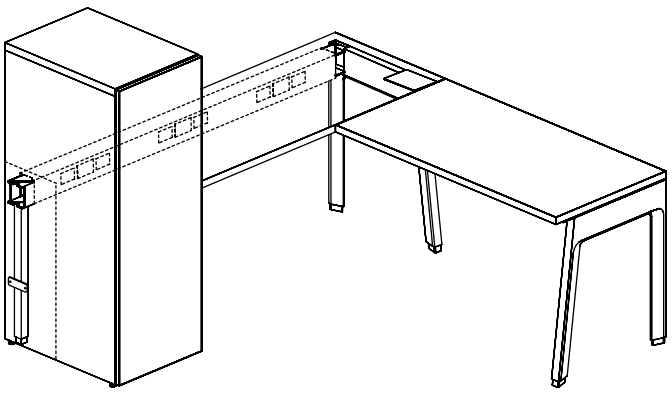

understanding structural post (continued)

Eight Structural Post configurations are available (continued):

recessed with long span kit configuration

- Three-Way 90° configuration with Recessed Structural Post from structural beams connection
- Connects two contiguous Single-Sided Beams to one perpendicular Double-Sided Beam
- Can also be used to support worksurface and Beam-Mounted Cabinets. For more details on these applications, refer to page 229

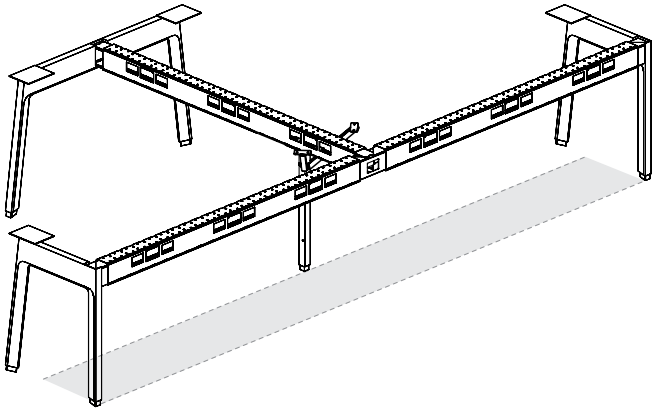

in-line – single-sided beam configuration

- Three-Way 90° configuration
- Connects two contiguous Single-Sided Beams to one perpendicular Single- or Double-Sided Beam
- Can also be used with Beam Towers – In-Line. For more details on this application, refer to page 256

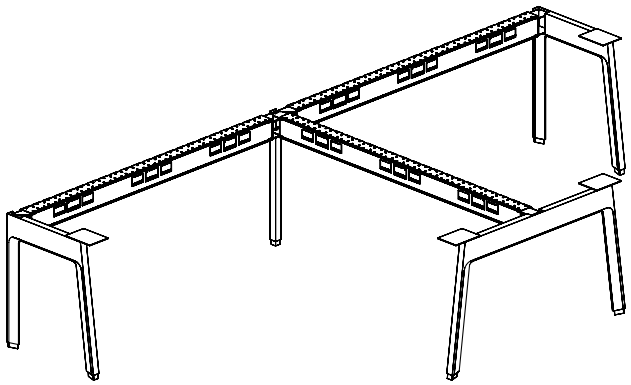

understanding structural post (continued)

Eight Structural Post configurations are available (continued):

in-line – double-sided beam configuration

- Four-Way 90° configuration
- Connects two contiguous Double-Sided Beams to two perpendicular Single- or Double-Sided Beams
- Can also be used with back-to-back Beam Towers – In-Line. For more details on this application, refer to page 256

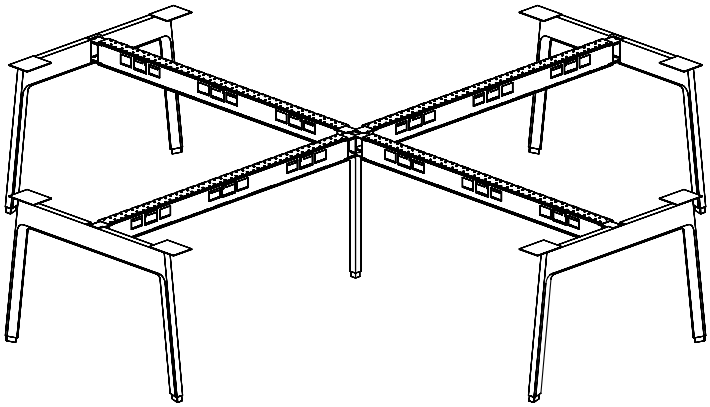

four-way exposed – double-sided beam configuration

- Four-Way 90° configuration
- Connects four Double-Sided Beams only
- Used in exposed beam application only

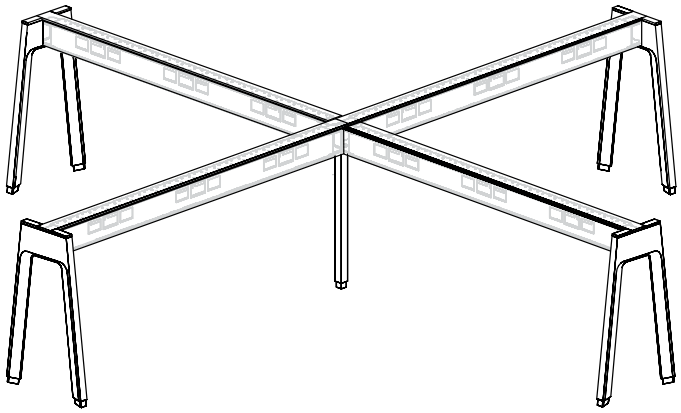

understanding structural post (continued)

Eight Structural Post configurations are available (continued):

two-way – double-sided beam configuration

- Two-Way 120° configuration
- Connects two Double-Sided Beams only
- Available in 28" standard height or 18" low height
- Used in exposed beam application only

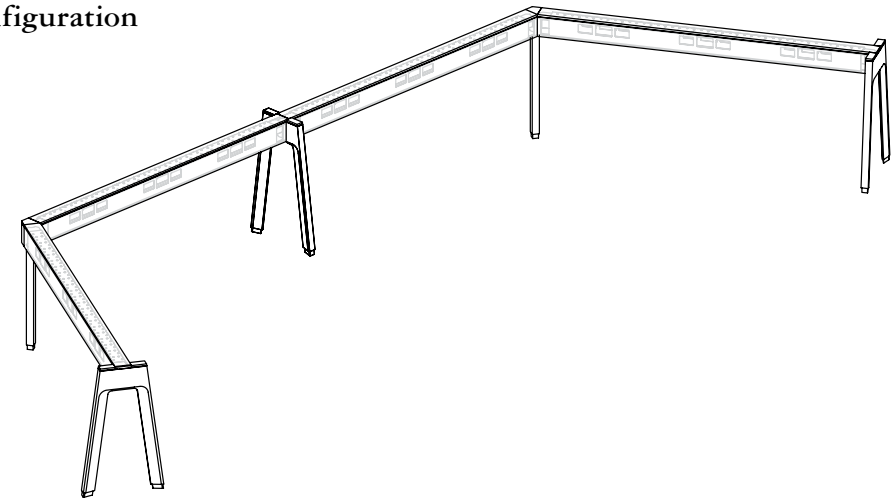

three-way – double-sided beam configuration

- Three-Way 120° configuration
- Connects three Double-Sided Beams only
- Available in 28" standard height or 18" low height
- Used in exposed beam application only

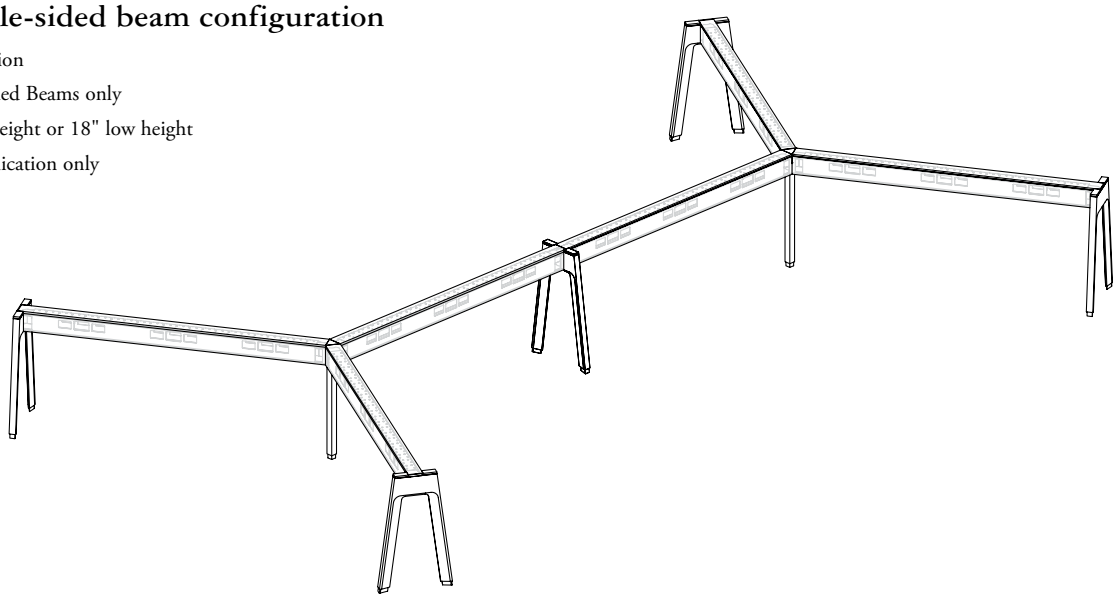

structural post basics

The following outlines the most common positions for Structural Posts in an Expansion Cityline workstation.

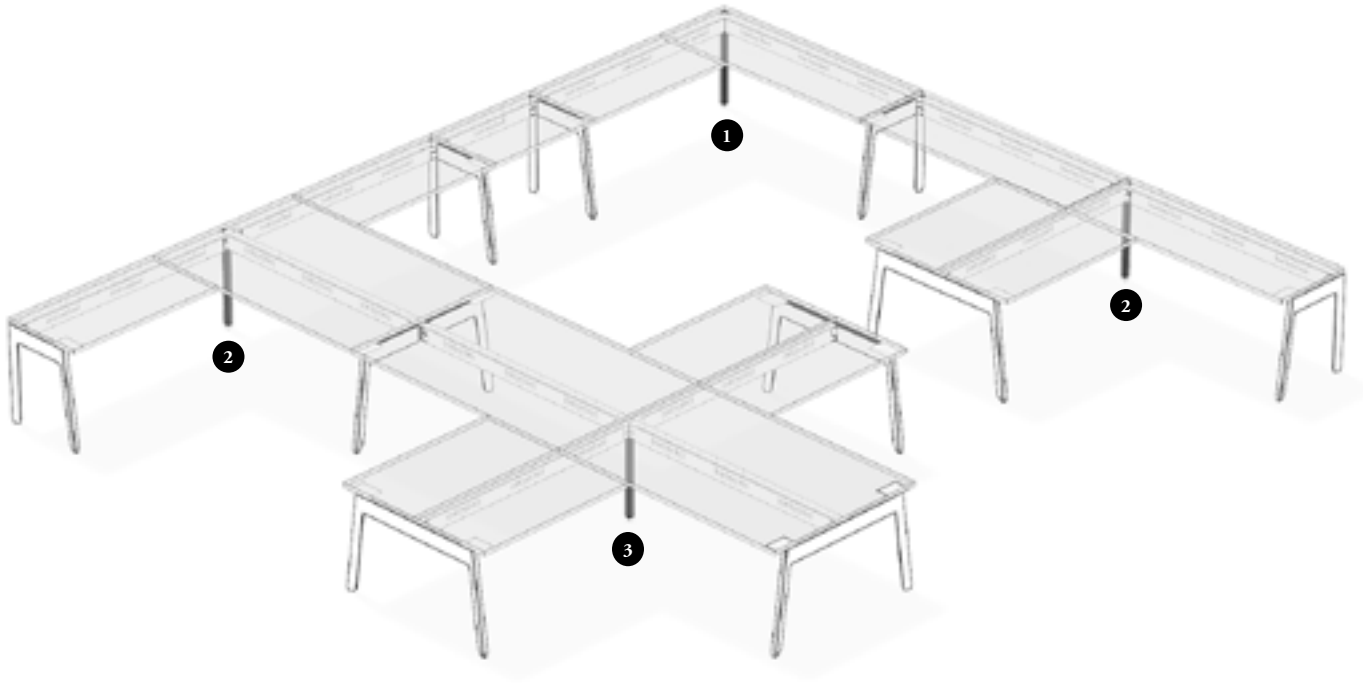

Structural Posts

- Installed between two, three, four perpendicular or between two or three 120° Structural Beams (JNDBB) or Chicago Structural Beams (JNDCB) to provide frame support
- Can be used with Single- or Double-Sided Beams dependently on configuration selected
- Are available in standard height or low height dependently on configuration specified, with a leveling range of 3"
- Come with a Leveler Cover to hide the black leveler for aesthetic look
- A Storage Bracket option is available on most of Structural Posts and required to be used in supporting storage application. For more details on this application, refer on page 258

Structural Posts for perpendicular applications

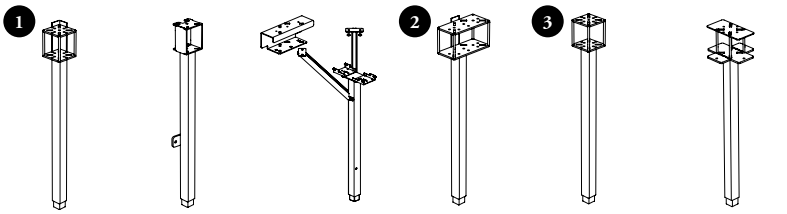

Corner JNDPU_C

End – Storage JNDPU_E

Recessed with Long Span Kit JNDPU_R

In-Line – Single-Sided Beam JNDPU_T

In-Line – Double-Sided Beam JNDPU_Z

Four-Way Exposed – Double-Sided Beam JNDPU_X

Structural Posts for 120° applications

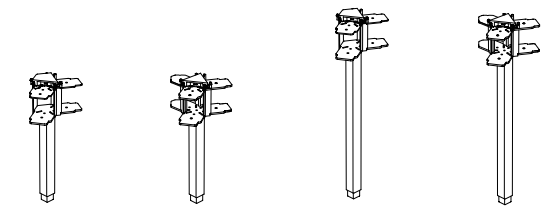

Two-Way – Double-Sided Beam JNDPLY_V

Three-Way – Double-Sided Beam JNDPLY_Y

Two-Way – Double-Sided Beam JNDPY_V

Three-Way – Double-Sided Beam JNDPY_Y

planning with structural post

The following should be considered when planning with Structural Posts.

- Standard height is 28" from the finished floor to the finished Structural Beam Cover Top or 29" high from the finished floor to the top of the finished worksurface, when used with fixed height worksurface
- Low height is 18" from the finished floor to the finished Structural Beam Cover Top

corner configuration (C)

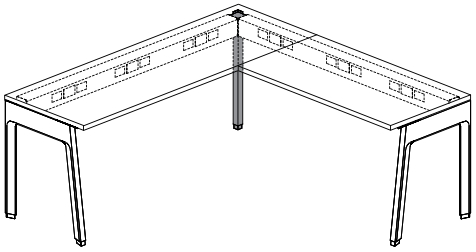

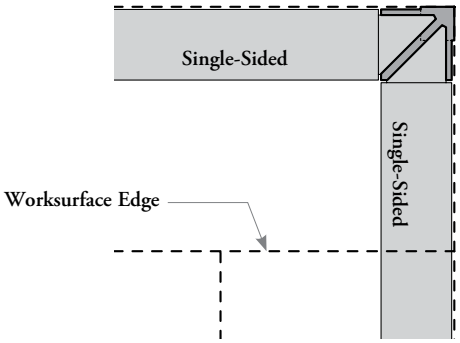

- Available in 28" standard height only
- This post allows perpendicular applications only
- Two single-sided beams are required to create a corner workstation
- One single-sided worksurface must be specified full width to maintain beams square and strong

recessed with long span kit (R)

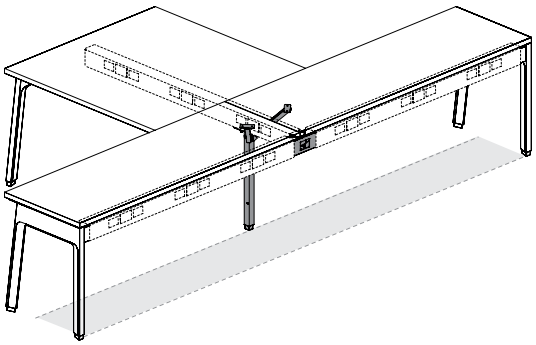

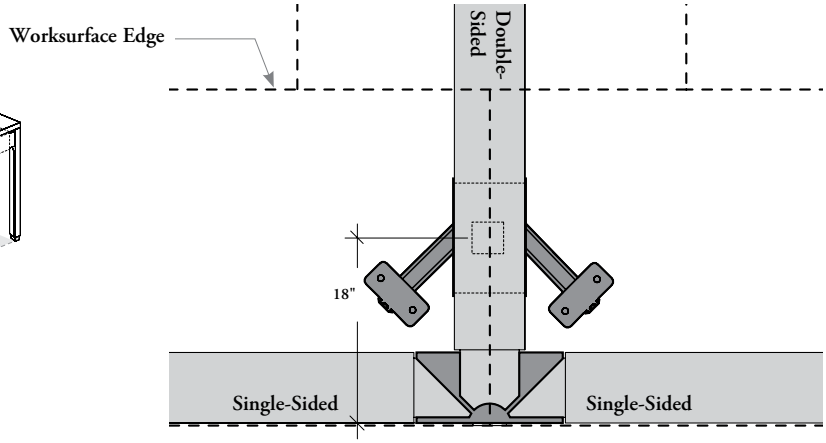

- Available in 28" standard height only
- This post allows perpendicular workstations
- One Double-Sided Beam must be connected perpendicularly to two contiguous Single-Sided Beams
- Post is 18" recessed under the Double-Sided Beam
- The two contiguous Single-Sided Beams can be used to support worksurface or Beam-Mounted Cabinet

planning with structural post (continued)

in-line – single-sided beam configuration (T)

perpendicular

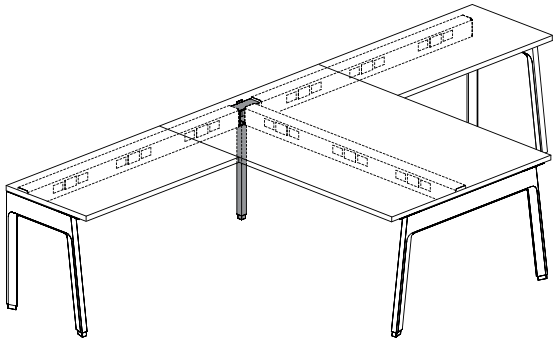

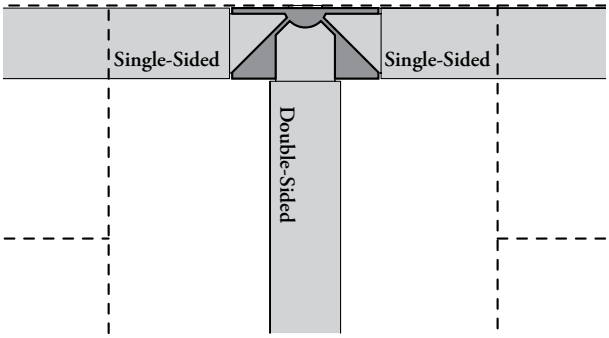

parallel

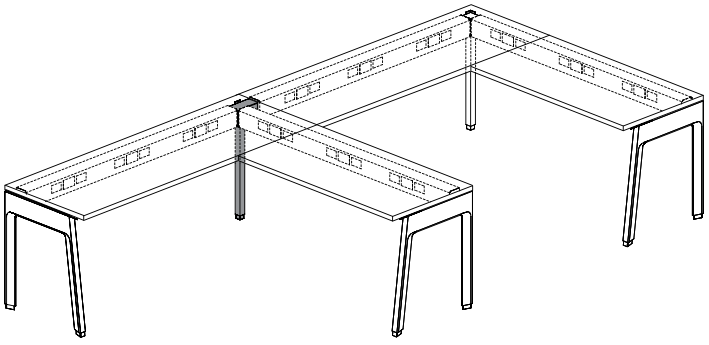

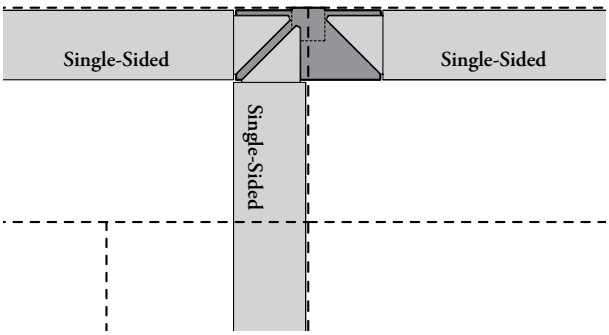

- Available in 28" standard height only
- This post allows perpendicular and parallel workstations
- In perpendicular workstations, one double-sided beam must be connected perpendicularly to two contiguous single-sided beams
- In parallel workstations, one single-sided beam must be connected perpendicularly to two contiguous single-sided beams
- T-Connector on post must be covered with one double-sided or two single-sided worksurfaces to maintain beams square and strong
- The No Storage Bracket option must be used when this post is connected to three structural beams

planning with structural post (continued)

in-line – double-sided beam configuration (X)

perpendicular

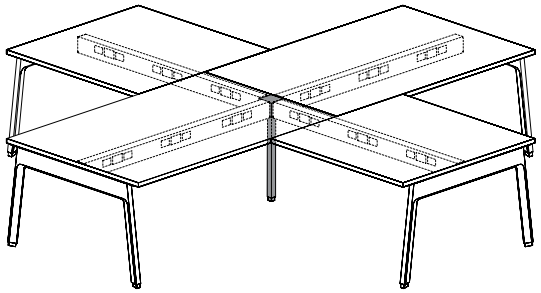

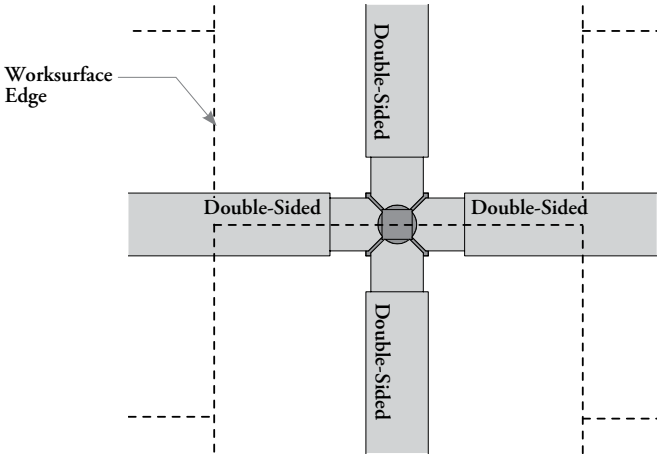

parallel

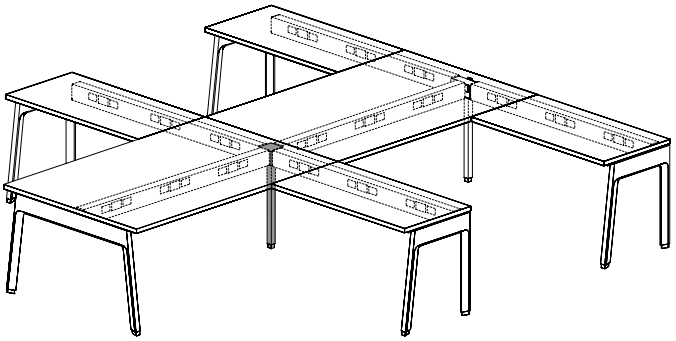

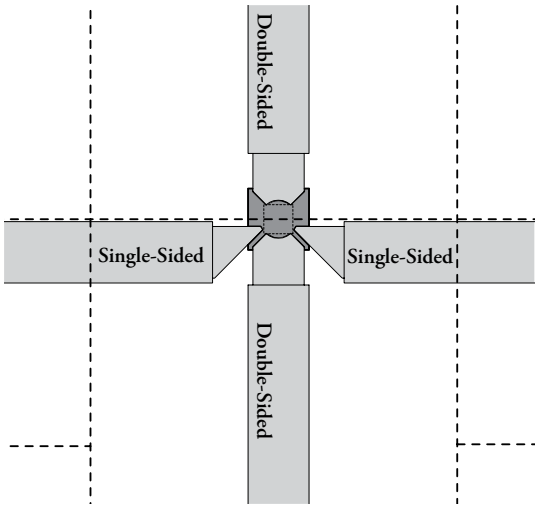

offset

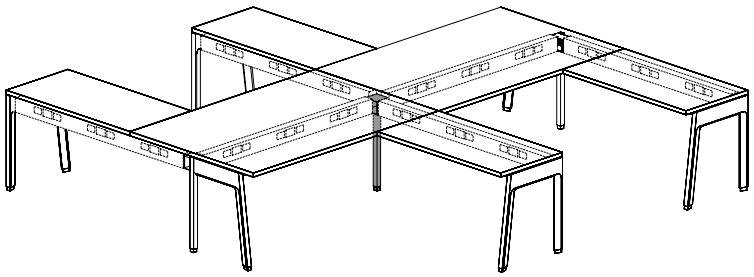

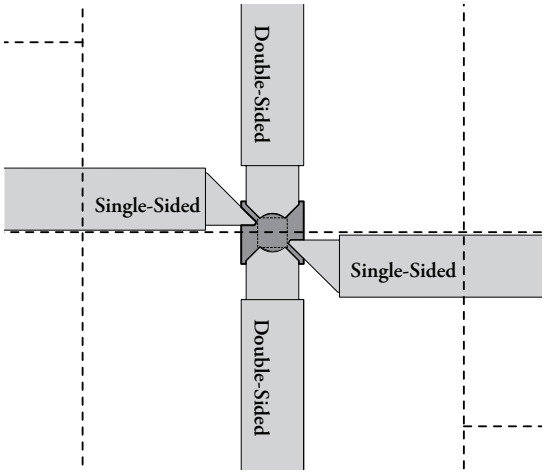

- Available in 28" standard height only
- This post allows perpendicular, parallel or offset workstations
- In perpendicular workstations, two double-sided beams must be connected perpendicularly to two contiguous double-sided beams
- In parallel and offset workstations, two single-sided beams must be connected perpendicularly to two contiguous double-sided beams
- X-Connector on post must be covered with two double-sided worksurfaces to maintain beams square and strong
- The No Storage Bracket option must be used when this post is connected to four structural beams

planning with structural post (continued)

four-way exposed – double-sided beam configuration (Z)

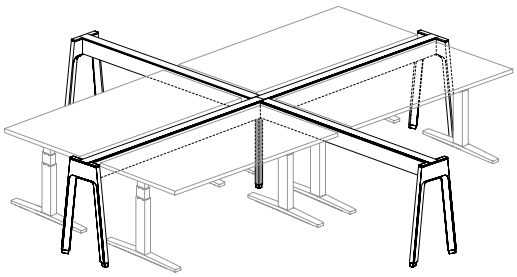

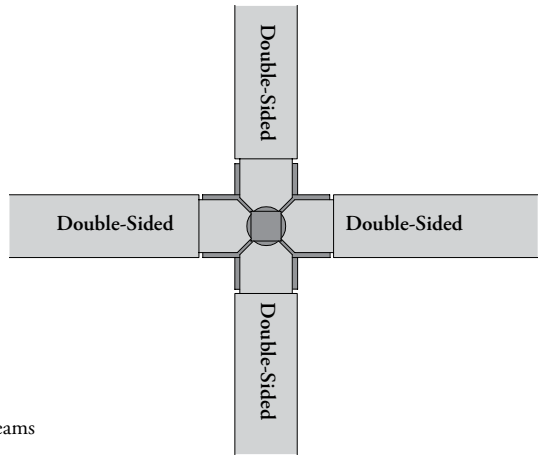

- Available in 28" standard height only
- This post allows perpendicular applications only
- Two Double-Sided Beams must be connected perpendicularly to two contiguous Double-Sided Beams
- This post is used in exposed beam application only
- The No Storage Bracket option must be used with this post

two-way – double-sided beam configuration (V) – 120° desk structure

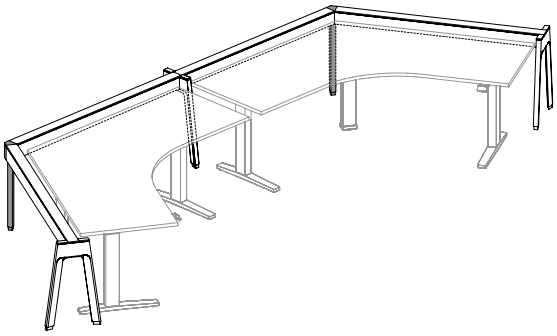

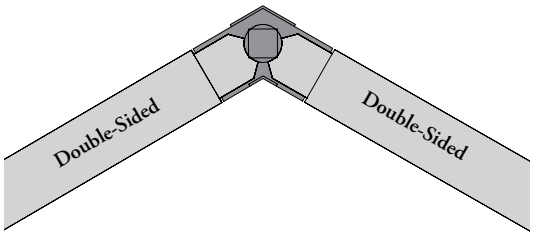

- Available in 28" standard height (JNDPY_V) or 18" low height (JNDPLY_V)
- This post allows 120° applications only
- Two Double-Sided Beams are required to create a 120° Two-Way Exposed Beam application
- This post is used in exposed beam application only
- The No Storage Bracket option must be used with this post

three-way – double-sided beam configuration (Y) – 120° desk structure

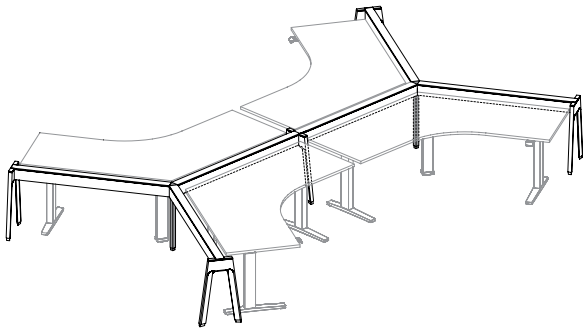

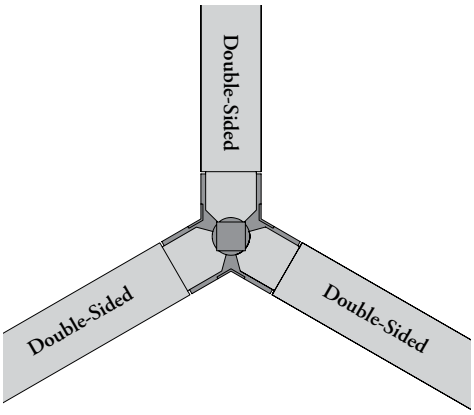

- Available in 28" standard height (JNDPY_Y) or 18" low height (JNDPLY_Y)
- This post allows 120° applications only
- Three Double-Sided Beams are required to create a 120° Three-Way Exposed Beam application
- This post is used in exposed beam application only
- The No Storage Bracket option must be used with this post

planning with structural post (continued)

recessed with long span kit restrictions

- Available in 28" standard height only
- This post allows perpendicular workstations only and must be installed under a Double-Sided Beam
- The Double-Sided Beam must be connected perpendicularly to two contiguous Single-Sided Beams using the long span kit
- Can be used to support worksurfaces, credenzas or Beam-Mounted Cabinets
- Beam connection must be covered with one double-sided or two single-sided worksurfaces or two Beam-Mounted Cabinets

with worksurface application

- Full width of worksurfaces is mandatory in both directions
- Worksurfaces of 18" deep **cannot** be used along the long span

'X' Depth	'Y' Restricted Min. Width
If 36"	120"
If 48" or 60"	96"

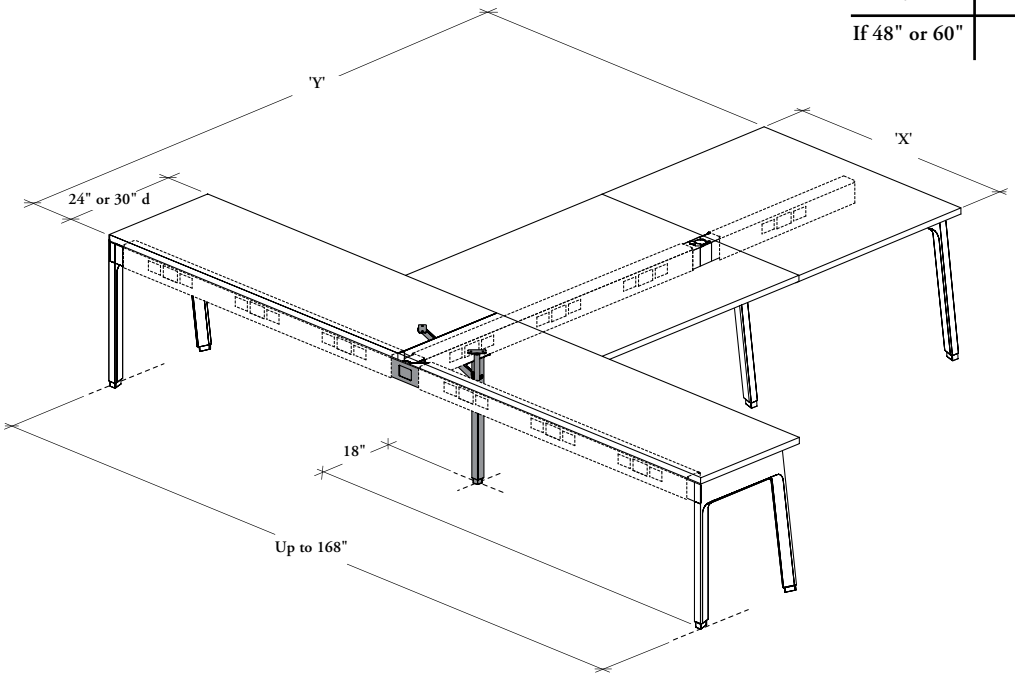

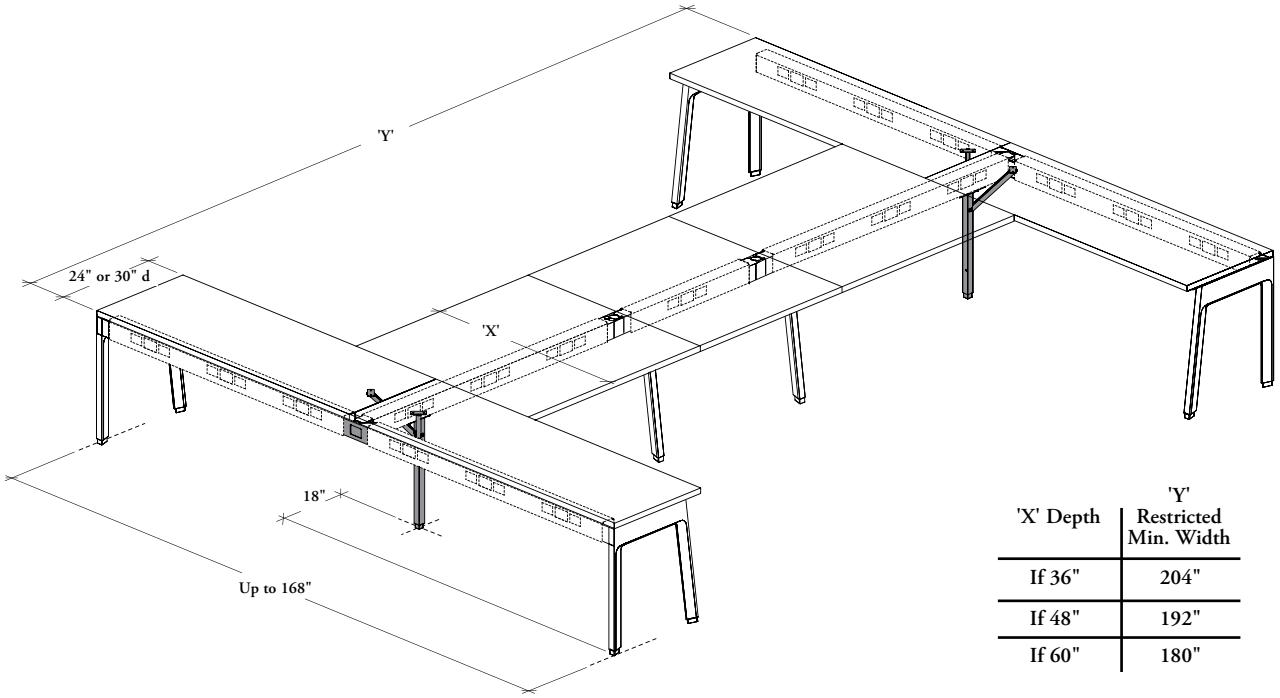

'X' Depth	'Y' Restricted Min. Width
If 36"	204"
If 48"	192"
If 60"	180"

planning with structural post (continued)

with semi-suspended credenza application

- Credenzas can be added in either directions, but not at the same time
- Full width of worksurfaces is mandatory in the other direction
- Credenzas and worksurfaces of 18" deep **cannot** be used along the long span
- If the Credenzas are installed along the long span, use the minimum width restrictions of the worksurface application on previous page
- Semi-Suspended Credenza dimensions must be specified according to the standard rules. Refer to Beam-Mounted Storage section on page 583

'X' Depth	'Y' Restricted Min. Width
If 18"	84"
If 24"	78"

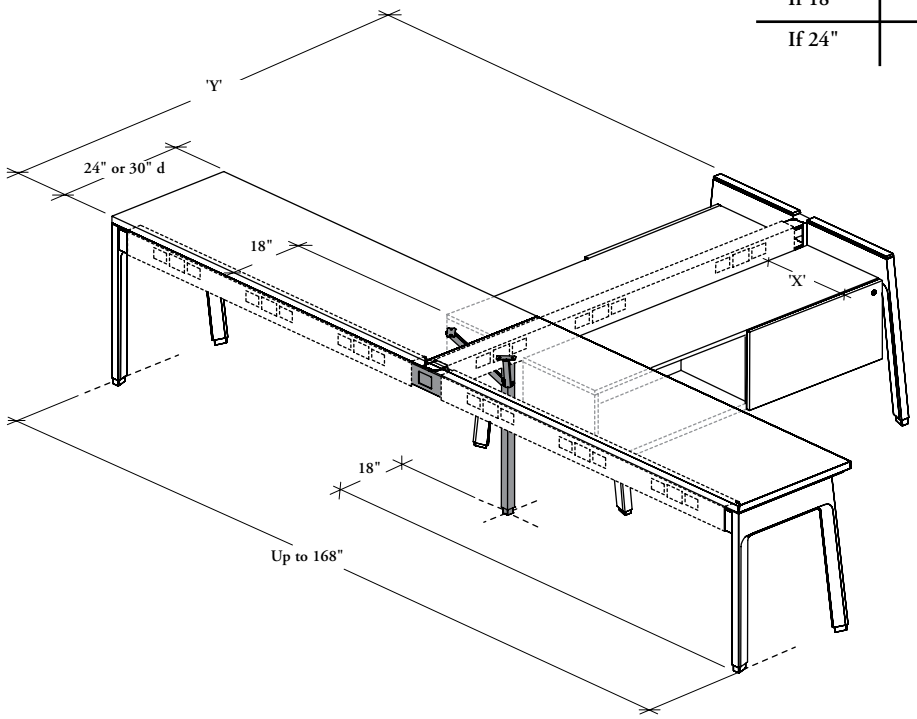

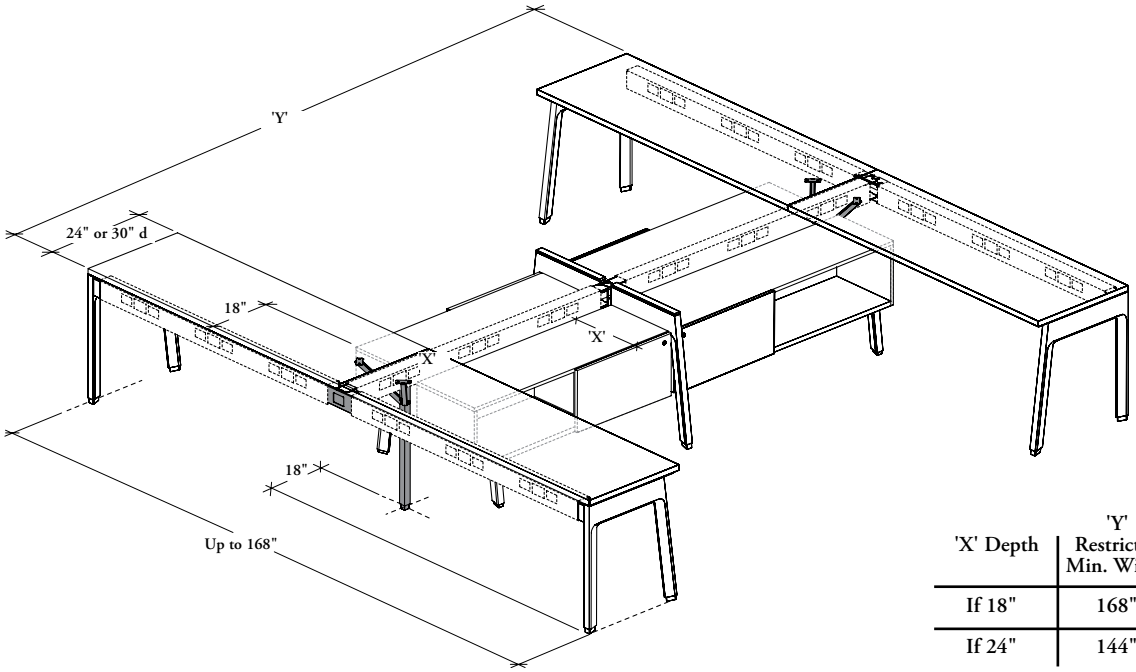

'X' Depth	'Y' Restricted Min. Width
If 18"	168"
If 24"	144"

planning with structural post (continued)

with beam-mounted cabinet application

- The Double-Sided Worksurface is mandatory in this application
- Their is no minimum width restriction with the use of Beam-Mounted Cabinets

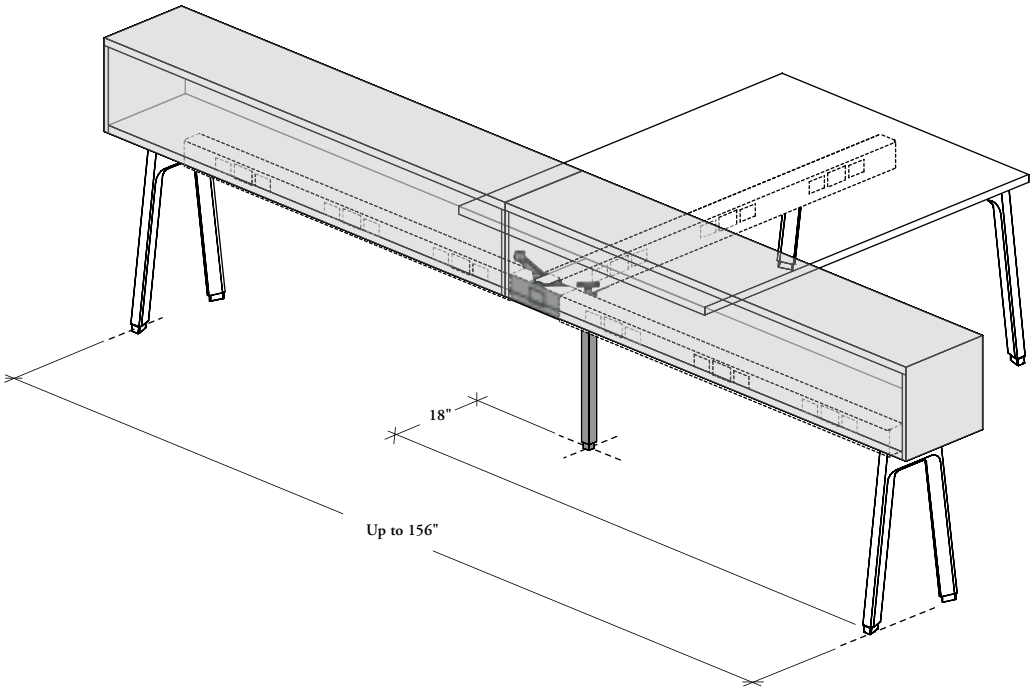

planning with structural post (continued)

restrictions

Mounted storage **cannot** be used parallel to long span. Must be used in perpendicular application only

parallel

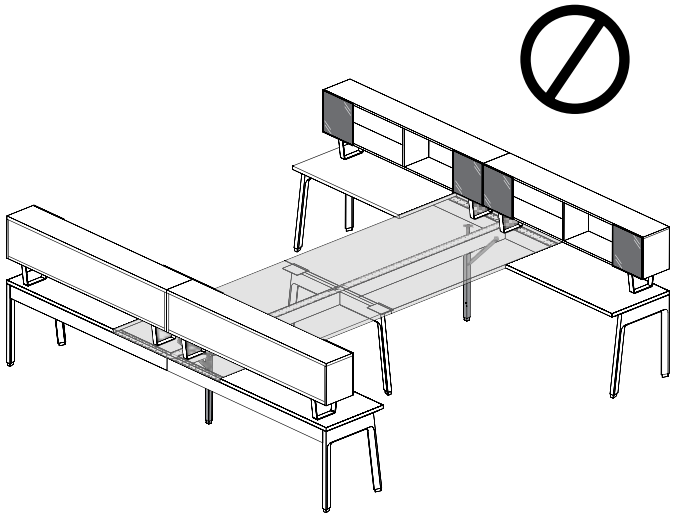

perpendicular

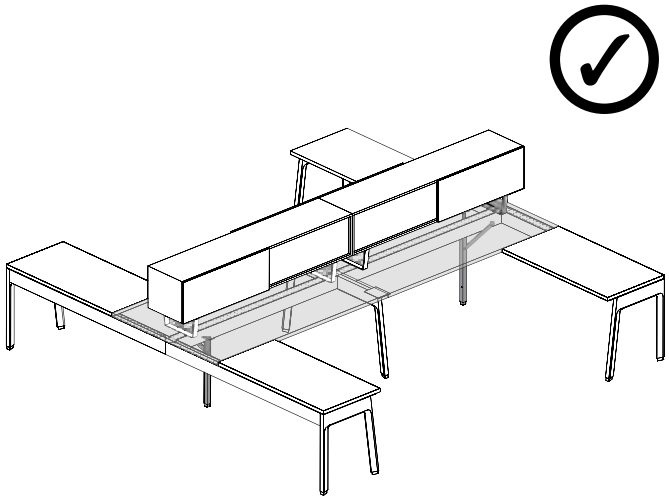

- The Power Box and Receptacle Outlets are **not** allowed when placed over the recessed post
- Worksurface Access Door are **not** allowed when placed over the recessed post

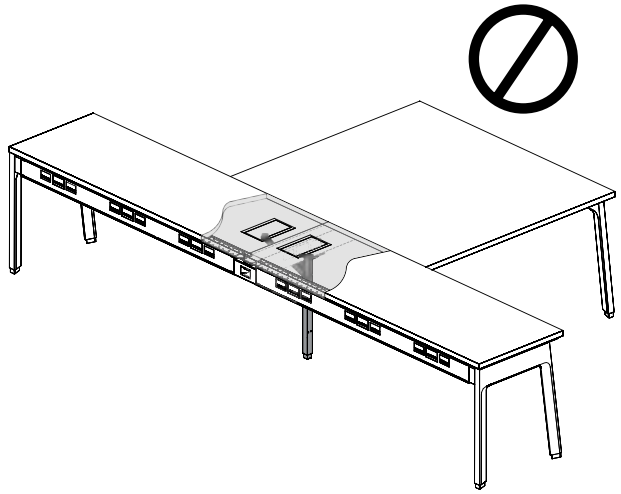

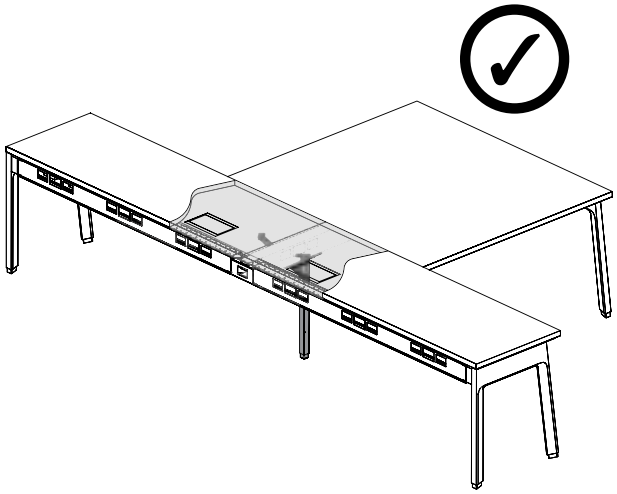

planning with structural post (continued)

restrictions (continued)

- 120° Structural Posts can be used in exposed beam application in combination with hiSpace or Navigate 120° Height-Adjustable Table
- Fixed worksurface **cannot** be installed
- Mostly used in combination with Low Structural Leg – Fence (JNDLLF) or Structural Leg – Fence (JNDLF)

two-way connection

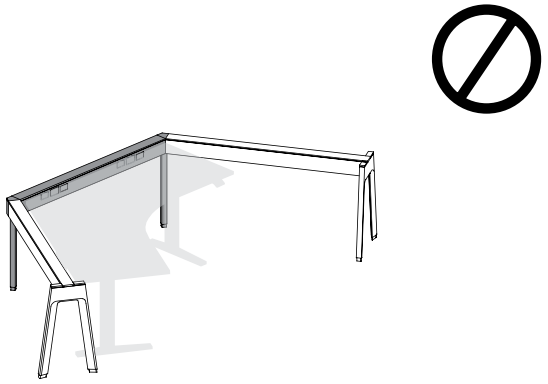

A Two-Way Connection **cannot** be used on both sides of a Structural Beam

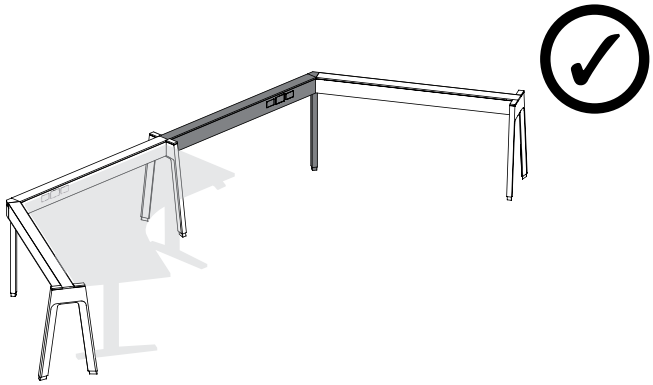

Structural Post – In-Line Double-Sided Beam can only be used at one end of a beam

three-way connection

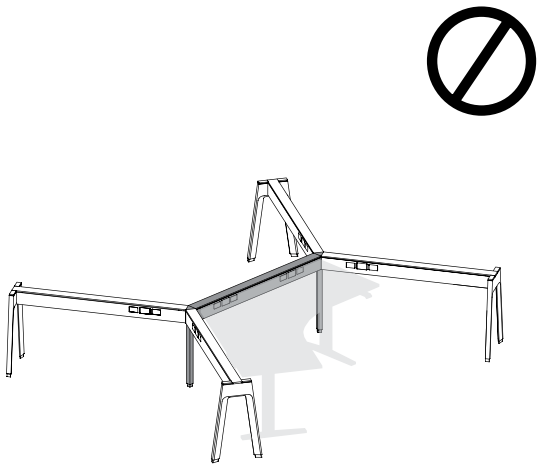

A Three-Way Connection **cannot** be used on both sides of a Structural Beam

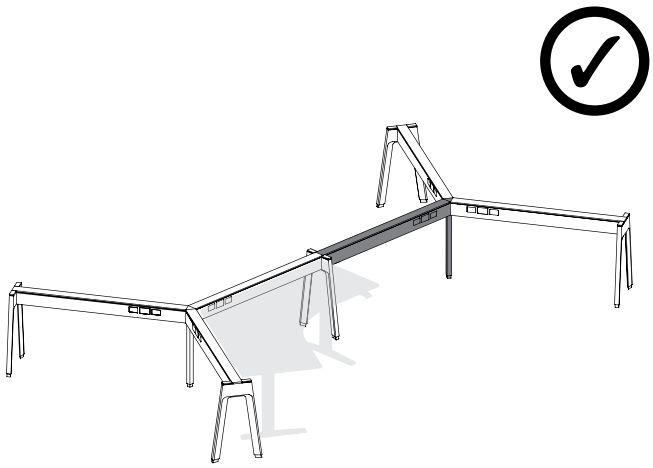

Structural Post – In-Line Double-Sided Beam can only be used at one end of a beam

understanding structural leg & structural post with front leg

Structural Legs support and connect structural beams while Structural Posts with Front Leg also enable adding or changing structural beams direction.

Three structural support styles are available: Single-Sided Structural Leg, Double-Sided Structural Leg, and Structural Post with Front Leg

Structural Post with Front Legs are installed at the junction of two or three perpendicular beams (JNDBB or JNDCB)

Structural Legs are installed at the end of one beam or between two contiguous beams (JNDBB or JNDCB)

1 Screws and nuts are also included to secure the beam connection to the Structural Leg or Structural Post with Front Leg connector

When specified, come with a Top Cover to hide the top of the leg in exposed beam configurations. A Worksurface Bracket (Shown) 2 can also be specified to attach worksurfaces

3 Come with a Leveler Cover hiding the black leveler for a more refine aesthetic

Provides a workstation leveling range of 3" (-3/16", +2 13/16")

structural legs

Are available in Single- (Shown) or Double-Sided style

Single-Sided leg comes with two vertical leg profiles: one angled 4 and one straight 5 (Shown)
Double-Sided leg comes with an angled profile 4 on both sides

Two connections can be specified: End (left or right) 6 or In-Line 7

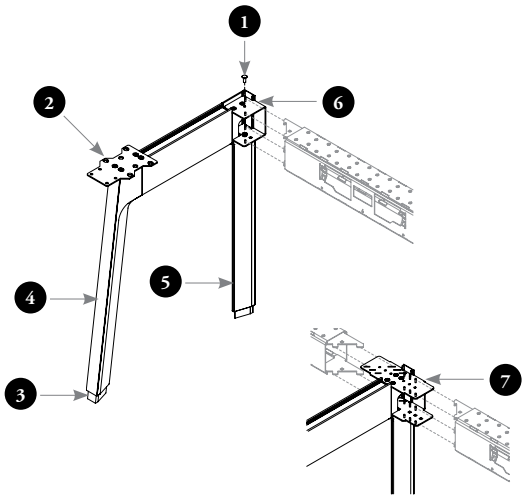

structural post with front leg

Combines two vertical structures: one post 8 and one angled front leg 9

Two connections can be specified: End (left or right) 10 or In-Line – Double-Sided Beam 11

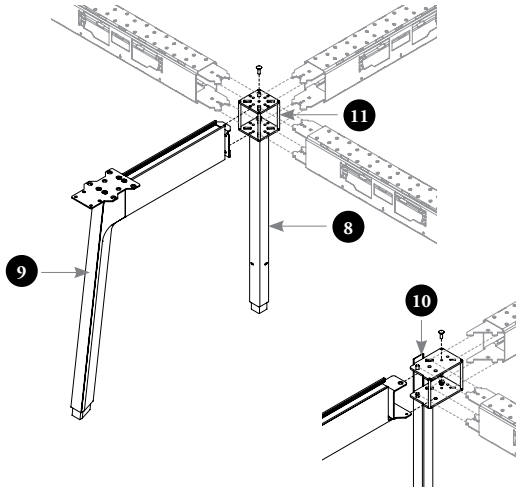

understanding structural leg & structural post with front leg (continued)

Two Structural Leg configurations are available:

end configuration

- Used in end of run only
- Can be specified left or right
- Can be specified in Single- or Double-Sided style

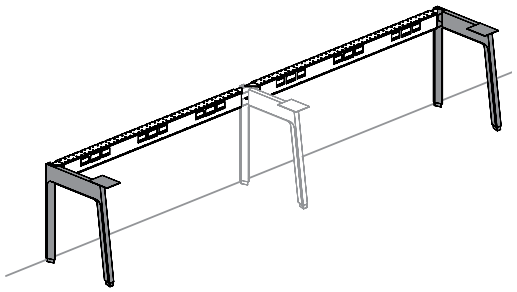

Single-Sided Configuration

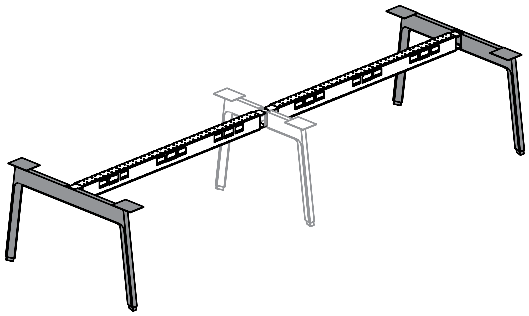

Double-Sided Configuration

in-line connection configuration

- Used between two Structural Beams
- Can be specified in Single- or Double-Sided style

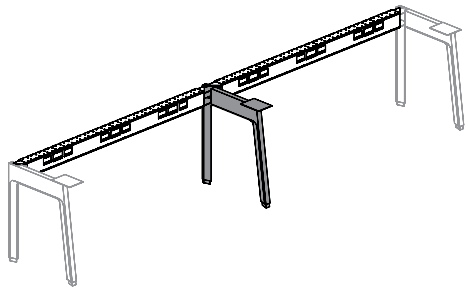

Single-Sided Configuration

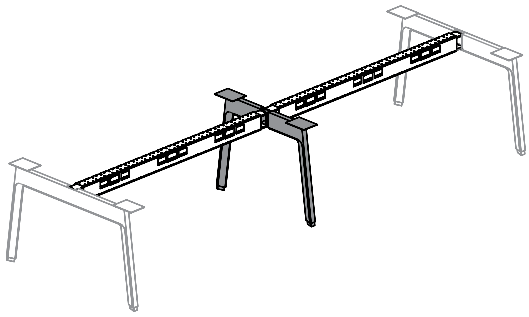

Double-Sided Configuration

Two Structural Post with Front Leg configurations are available:

end configuration

- Used in end of run only
- Can be specified left or right
- Front Leg is contiguous to a Single-Sided Structural Beam and perpendicular to a Double-Sided Structural Beam

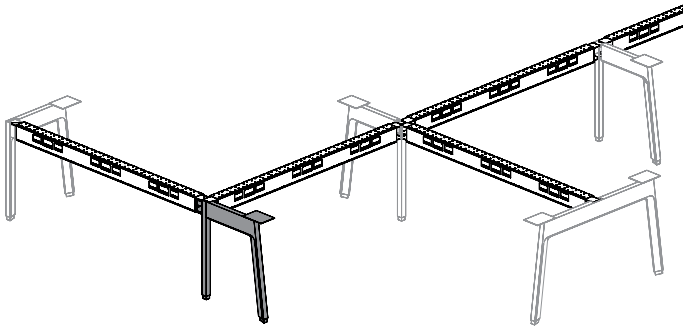

in-line – double-sided beam configuration

- Designed for offset applications only
- Used between two contiguous Double-Sided Structural Beams
- Post connector can receive one Single- or Double-Sided Structural Beam contiguously to the Front Leg

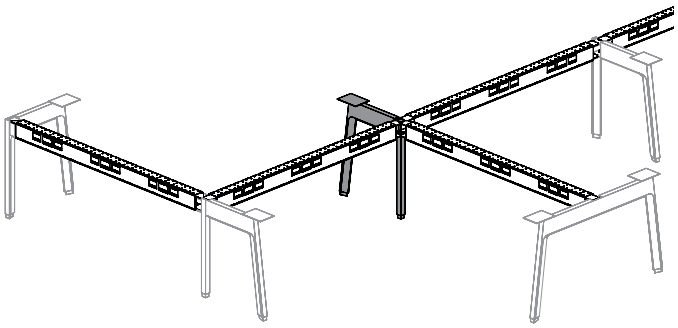

understanding structural leg & structural post with front leg (continued)

Two Structural Leg styles are available:

single-sided

- Must be specified with Single-Sided Structural Beam only
- Can support one end of Single-Sided Worksurfaces
- Can also be mounted along the user or visitor edge of Single- and Double-Sided Worksurface

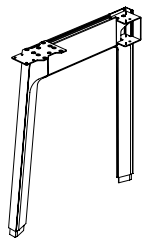

Single-Sided Structural Leg

double-sided

- Must be specified with Double-Sided Structural Beam only
- Can support one end of Double-Sided Worksurfaces

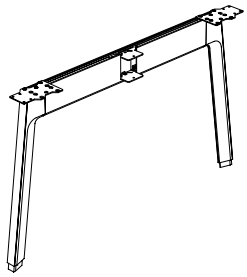

Double-Sided Structural Leg

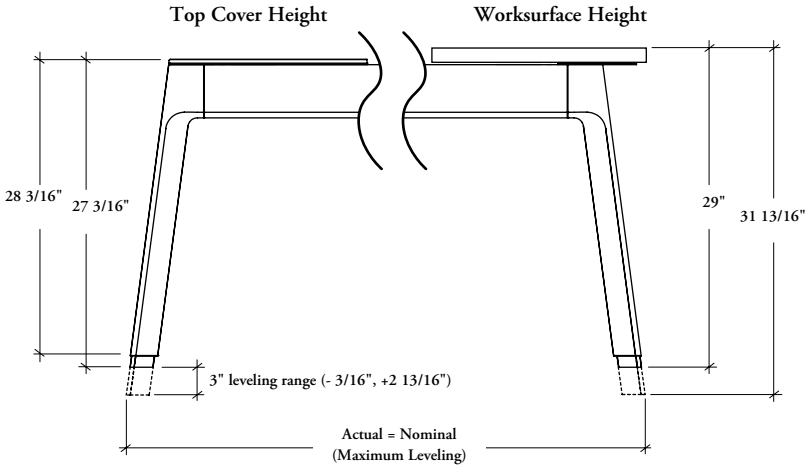

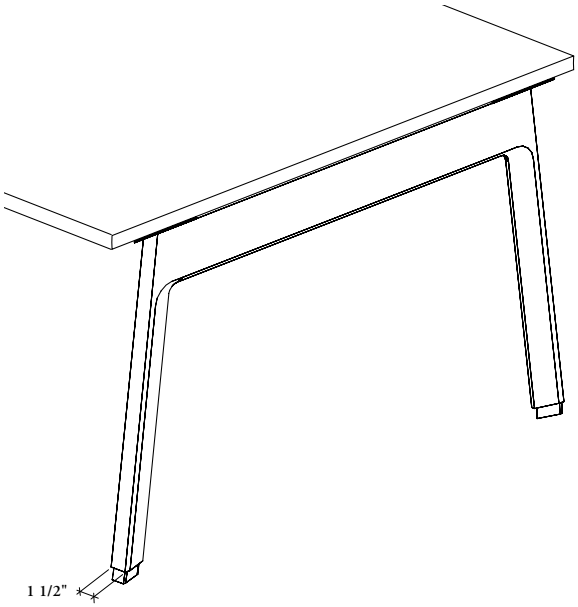

understanding structural leg & structural post with front leg (continued)

The design of Structural Leg and Structural Post with Front Leg allows to support a variety of storage and screens.

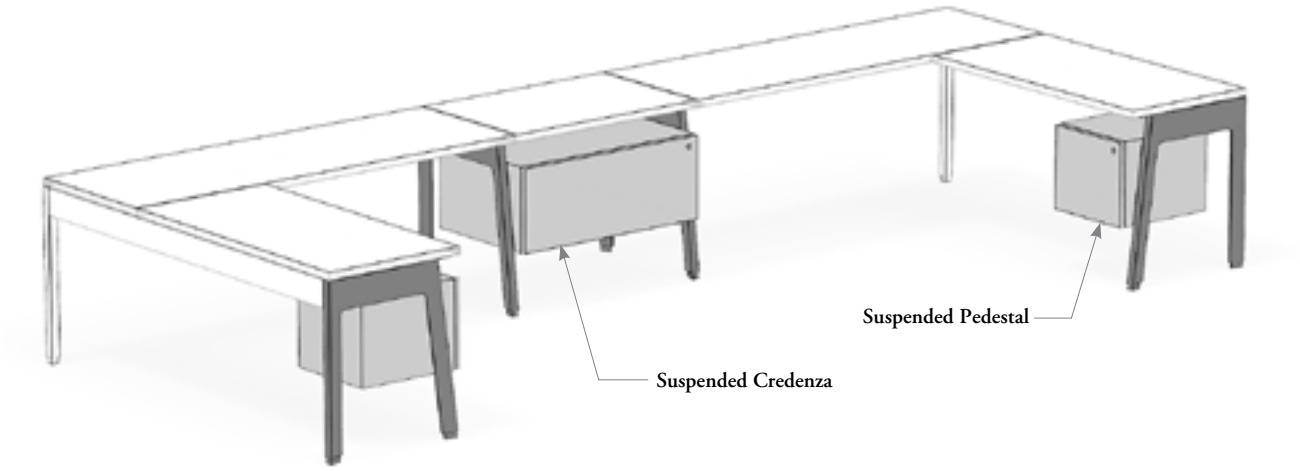

Groove on horizontal part

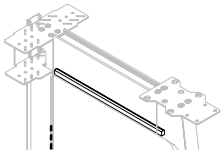

Slots on vertical parts

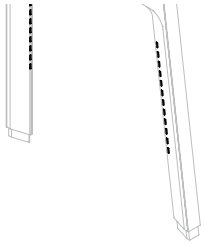

- Support all worksurface styles, suspended or semi-suspended credenzas, suspended pedestal/cubby and screens
- Two attachment features are integrated:

  The upper **horizontal part** comes with a bottom groove which contributes to support the following products:

  – Suspended Storage (JNBP, JNBC)
  – Leg-Mounted Elevated Screens (JNSESL, JNSEGL, JNSEFL, JNSEEL)
  – Beam-Mounted Corner Elevated Screen (JNSECF)

  The **vertical parts** (except post on Post with Front Leg) come with integrated slots which contribute to support the following products:

  – Suspended or Semi-Suspended Credenzas (JNBSF, JNBDF, JNBSO, JNBDO, JNBSOO, JNBDOO, JNBSC, JNBDC)
  – Suspended Pedestal/Cubby (JNBP, JNBC)
  – Leg-Mounted Floor Screens for one or two users (JNSFSL, JNSFST, JNSFGO, JNSFGT)
  – Leg-Mounted Floor Screen with Metal Towers for one or two users (JNSFOL, JNSFOT, JNSFDL, JNSFDT, JNSFTL, JNSFTT)
  – Table Attached Stabilizer for Structure (JNDST)

  The slots can be hidden with a groove trim (included) when they are not used. The trims come in the best match possible for the Foundation and Mica finishes, and they come in a Soft Gris coordinate for Accent colors

understanding structural leg & structural post with front leg (continued)

- The Structural Leg Cover – Top and Structural Leg Bracket for Worksurface are offered as an option on all leg styles and are also offered separately for re-configuration purposes, refer to page 308 for more details
- Three mounting options are available dependently on leg style:

top cover

- Finishes the top of legs in exposed beam application
- Available with Single-Sided, Double-Sided and Fence Leg styles
- Available with In-Line and End configurations
- **Not** available with 30" and 60" deep legs

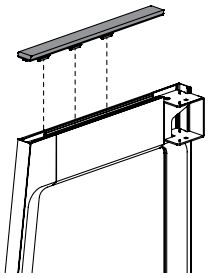

worksurface bracket

- Attaches the worksurface to the Structural Leg to maintain stability and level the surface
- Available with Single- and Double-Sided styles
- Available with In-Line and End configurations
- Available in all dimensions

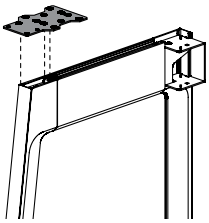

combo worksurface & top cover

- Combines a worksurface bracket on one side and a top cover on the other side
- Available with Double-Sided Structural Leg only
- Available with In-Line and End configurations
- **Not** available with 60" deep leg

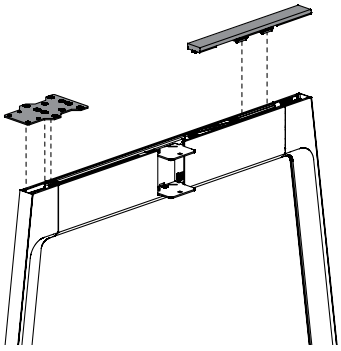

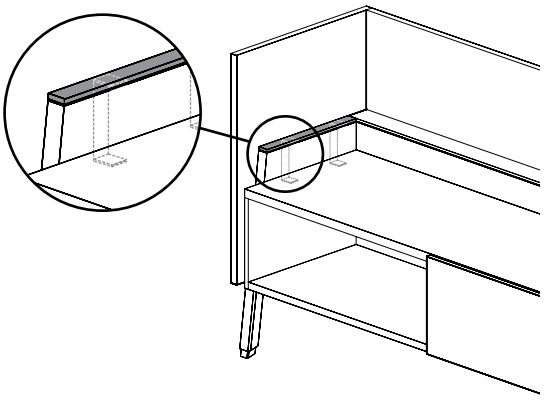

- Hides top structure of the leg and screens brackets
- Top cover comes with full walls for an optimal aesthetic but wall sections can be removed to allow screen bracket insertion

structural leg basics

The following outlines the most common positions for Structural Legs in an Expansion Cityline workstation.

Structural Leg – Single-Sided (JNDLS) can be used in fully exposed application but some restrictions must be taken in consideration due to the structure stability. Refer on pages 265 to 269 for more details

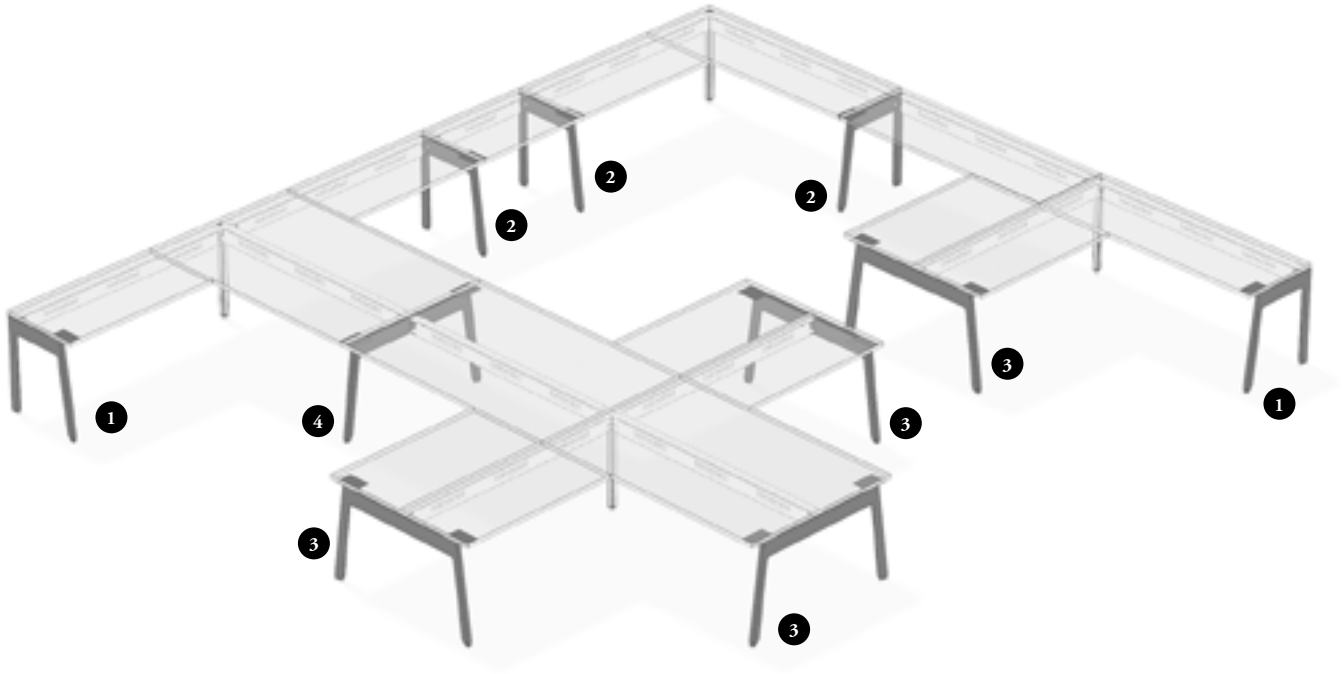

- Only available with Angled (A) profile
- Height is 29" from the finished floor to the top of the finished worksurface with a leveling range of 3"
- Comes with a Leveler Cover to hide the black leveler for aesthetic look. The Leveler Cover will match with the leg finish

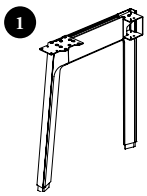

End – Left (L) or
End – Right (R)

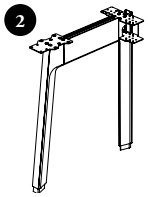

In-Line (I)

Structural Leg – Single-Sided (JNDLS)

- Support Structural Beams (JNDBB) or Chicago Structural Beams (JNDCB) in end (left or right) or in-line configuration to maintain stability
- Available in depths 18" to 30" (6" increments)
- Can be used with Single-Sided Beams only
- When specified, a Top Cover or a Worksurface Bracket is included

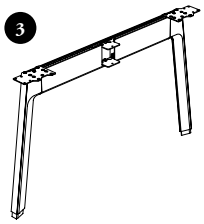

End (E)

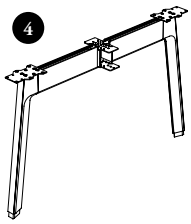

In-Line (I)

Structural Leg – Double-Sided (JNDLD)

- Support Structural Beams (JNDBB) or Chicago Structural Beams (JNDCB) in end or in-line configuration to maintain stability
- Available in depths 24", 36", 48" or 60"
- Can be used with Double-Sided Beams only
- When specified, Top Covers and/or Worksurface Brackets are included

planning with full depth structural leg

End Structural Legs are always concealed in the nominal footprint of a workstation. In-Line Structural Legs are rather shared between workstations. The In-Line Structural Leg also has a built-in ability to be shifted completely underneath a worksurface in cases where a mix of worksurface and beam-exposed areas are configured.

- The shifting ability is only applicable with In-Line Structural Leg configuration of same depth than the worksurface
- **Not** applicable with Structural Post with Front Leg
- In-Line Single-Sided Structural Leg in standard position can be specified full worksurface depth or 6" recessed; In-Line Double-Sided style in standard position can be specified full worksurface depth, 6" or 12" recessed on both sides. See following illustrations below for details

in-line configuration with full leg depth – standard position

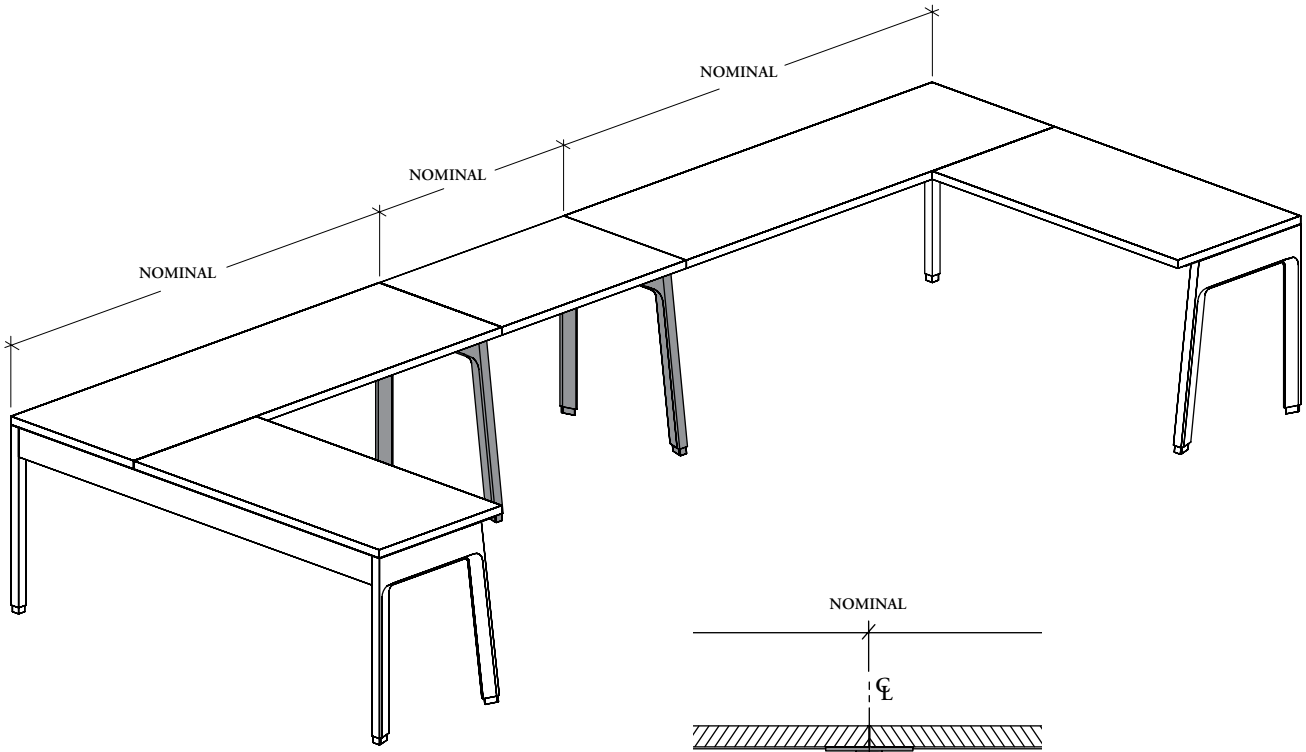

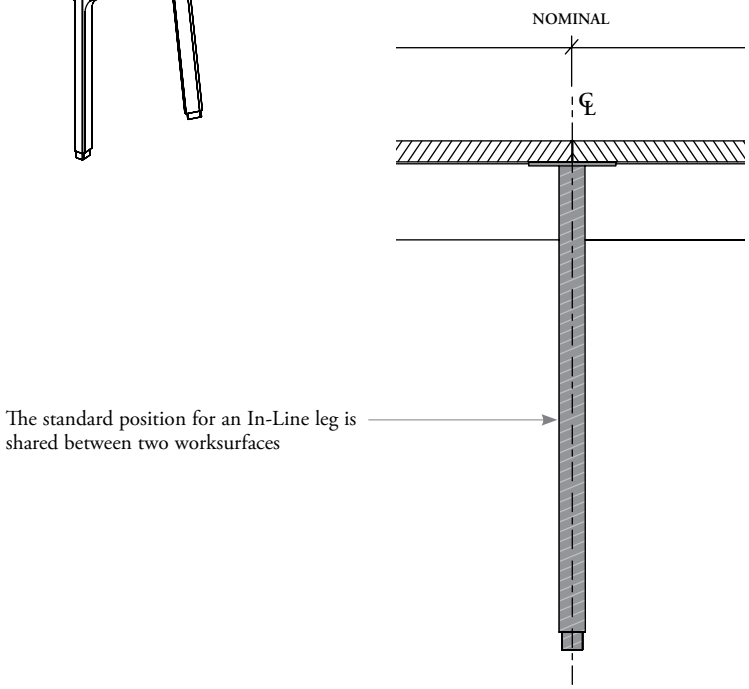

planning with full depth structural leg (continued)

in-line configuration with full leg depth – shifted position

- The In-Line configuration can be concealed underneath a worksurface when it is contiguous to an exposed-beam area
- Workstations below show the appropriate use of the built-in shifting ability of In-Line legs
- Only full depth In-line legs can be shifted
- Must be specified with Worksurface Bracket option

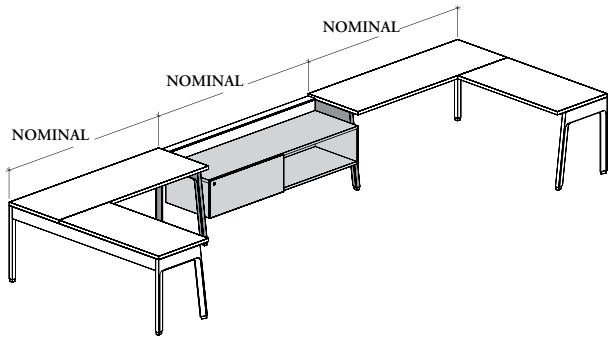

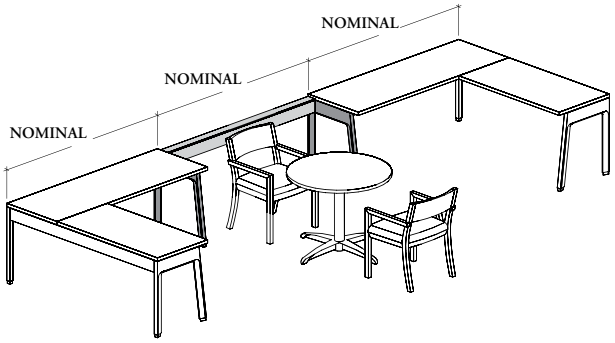

- Mix of worksurface and beam-exposed areas where each In-Line leg is shifted underneath the worksurface
- Must be the same depth that the adjacent Worksurface and Suspended Credenza

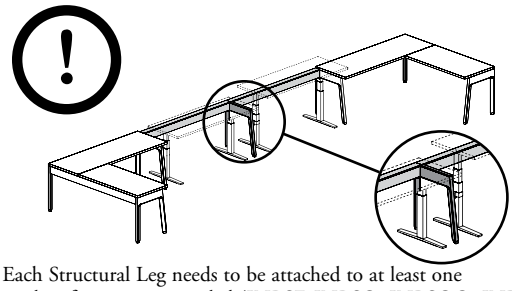

Each Structural Leg needs to be attached to at least one worksurface, one suspended (JNBSF, JNBSO, JNBSOO, JNBSC), one semi-suspended (JNBDF, JNBDO, JNBDOO, JNBDC) credenza or one stabilizer for structure (JNDSWB, JNDST) to remain stable

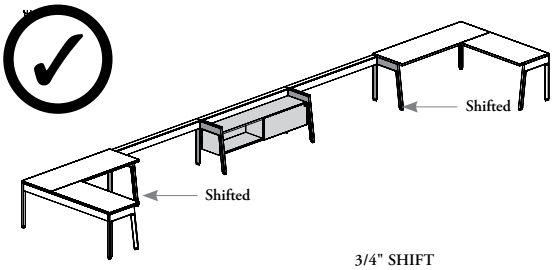

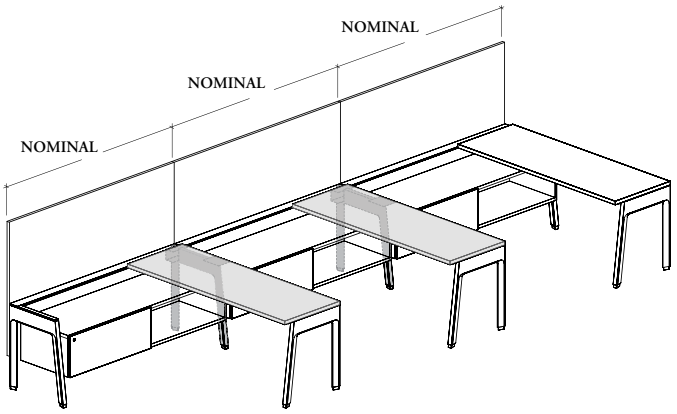

- Must be the same depth than the suspended credenza
- Shifting an In-Line leg will have an impact on the width reduction option of the Suspended Credenza and Structural Beam Cover – Side

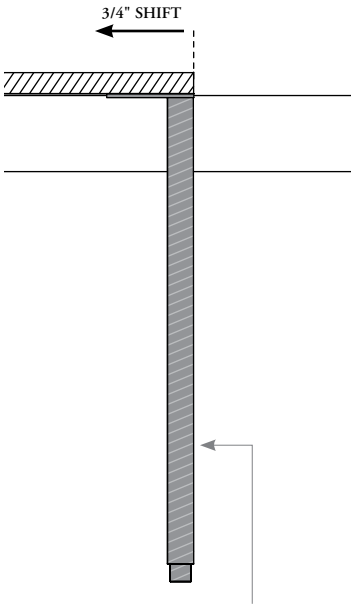

- The In-Line leg can be shifted half its width (3/4") toward worksurface to conceal it
- **Warning**, although there is no need to specify an option for the built-in shifting ability of In-Line legs, this feature has an impact on the specification of the width reduction option of Suspended Credenzas and Structural Beam Cover – Side. Please refer to the Beam-Mounted Storage section and page 295 of this section for details

planning with exposed structural legs

When planning with a single-sided exposed structure workstation, each leg still need to be stabilized

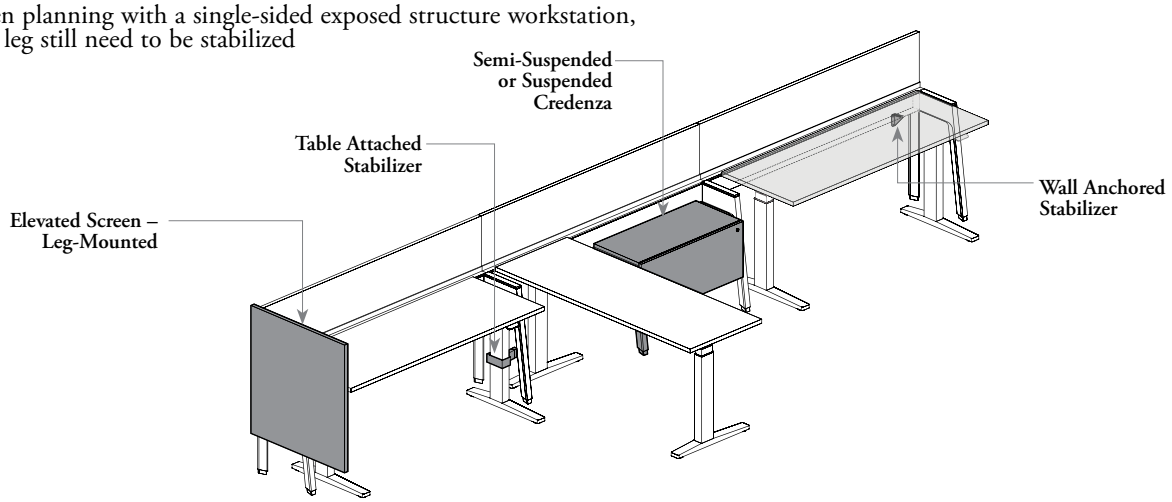

Single-Sided Exposed Structure Workstation

An exposed Single-Sided Structural Leg can be stabilized by:

– A Leg-Mounted Elevated Screen (JNSESL, JNSEGL, JNSEFL or JNSEEL), Floor Screen for one user (JNSFSL or JNSFGO) or Floor Screen with Metal Tower for one user (JNSFOL, JNSFDL or JNSFTL) with minimum 36" wide for 42" screen height or 30" wide for 51" screen height

– A Suspended Credenza (JNBSF, JNBSO, JNBSOO or JNBSC), refer to page 587 of the Beam-Mounted Storage section for details

– A Semi-Suspended Credenza, refer to following chart for details

– A Table Attached Stabilizer for Structure (JNDST)

– A Wall Anchored Stabilizer for Structure (JNDSWB)

Stability with Semi-Suspended Credenza

	JNBDOO	JNBDO	JNBDF	
18" deep	No	No	No	✓
24" deep	No	Drawer Next to Structural Leg	✓	✓

57" high screens or 59" Sit and Slide Screens are **not** allowed on all casual workstations

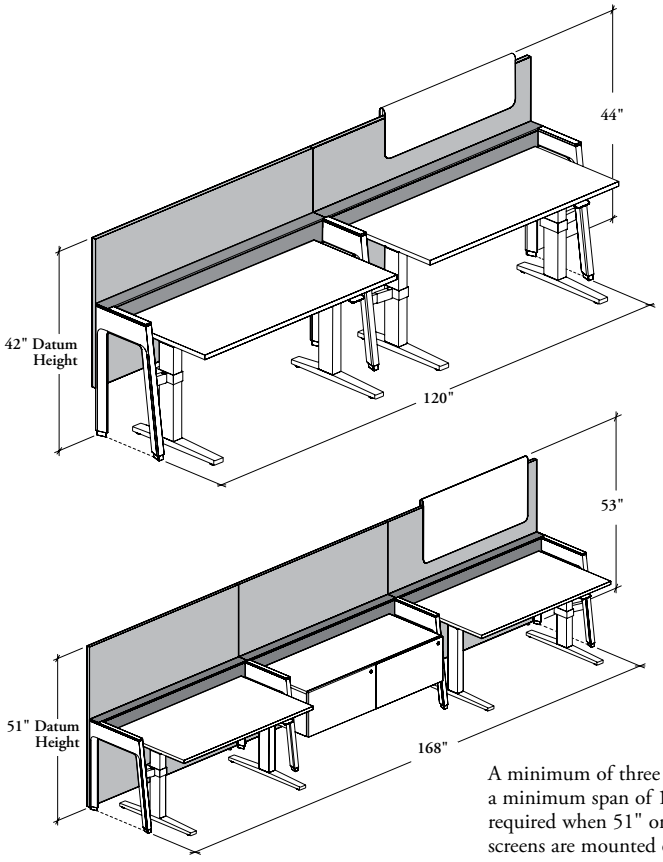

A minimum of three beams and a minimum span of 168" are required when 51" or 53" high screens are mounted on the beam

A minimum of two beams and a minimum span of 120" are required when 42" or 44" high screens are mounted on the beam

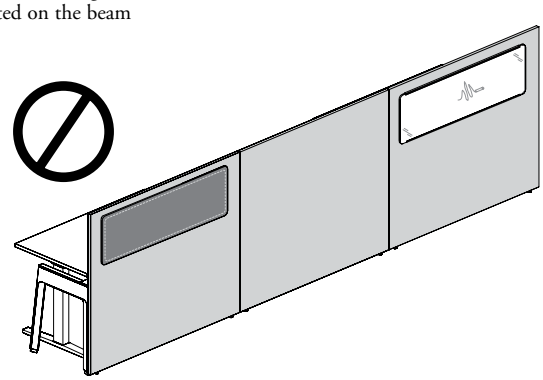

Casual Boards **cannot** be mounted on the outside of screens on single-sided casual workstations

planning with exposed structural legs (continued)

- When planning with an exposed Single- or Double-Sided Structural Leg – End Configuration (JNDLS_E or JNDLD_E), each end leg must remain square to the Structural Beam. This can be achieved with one of these combinations. For more details on Stabilizers, refer on pages 265 to 269
- Four applications are available:

Single-Sided

Double-Sided

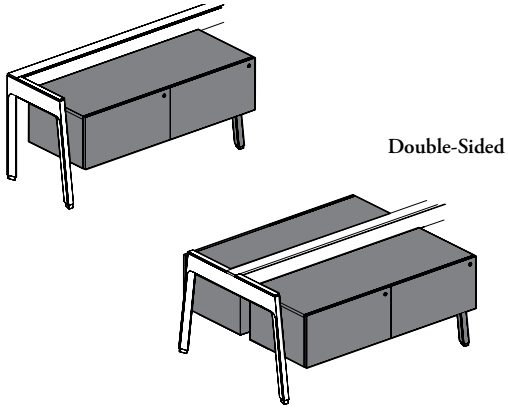

Suspended or Semi-Suspended Credenza Application

Single-Sided

Double-Sided

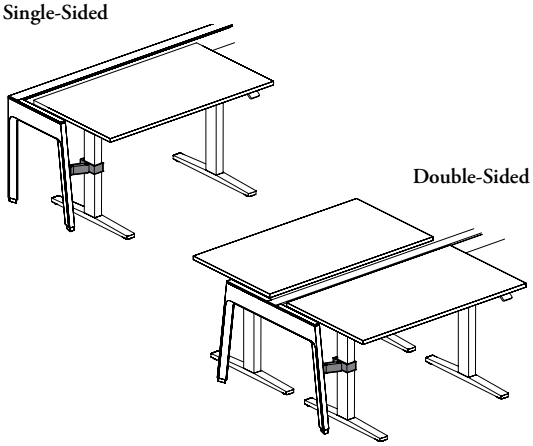

Table Attached Stabilizer for Structure Application

Single-Sided only

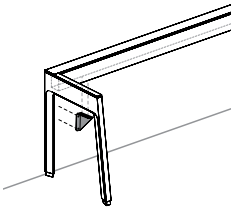

Wall Anchored Stabilizer for Structure Application

Single-Sided

Double-Sided

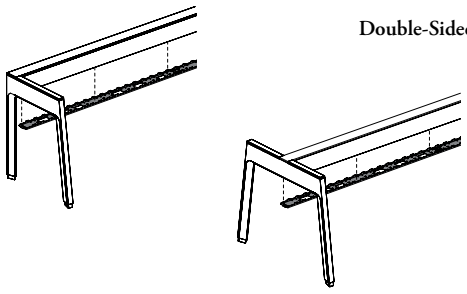

Bottom Kit for Structural Beam – Reinforced Application

planning with recess depth structural leg

A recessed leg provides additional kneespace clearance at the junction of two worksurfaces.

- The following applications and restrictions are only applicable with In-Line Single-Sided Structural Leg
- **Not** applicable with Structural Post with Front Legs

for single-sided configuration – recessed depth application

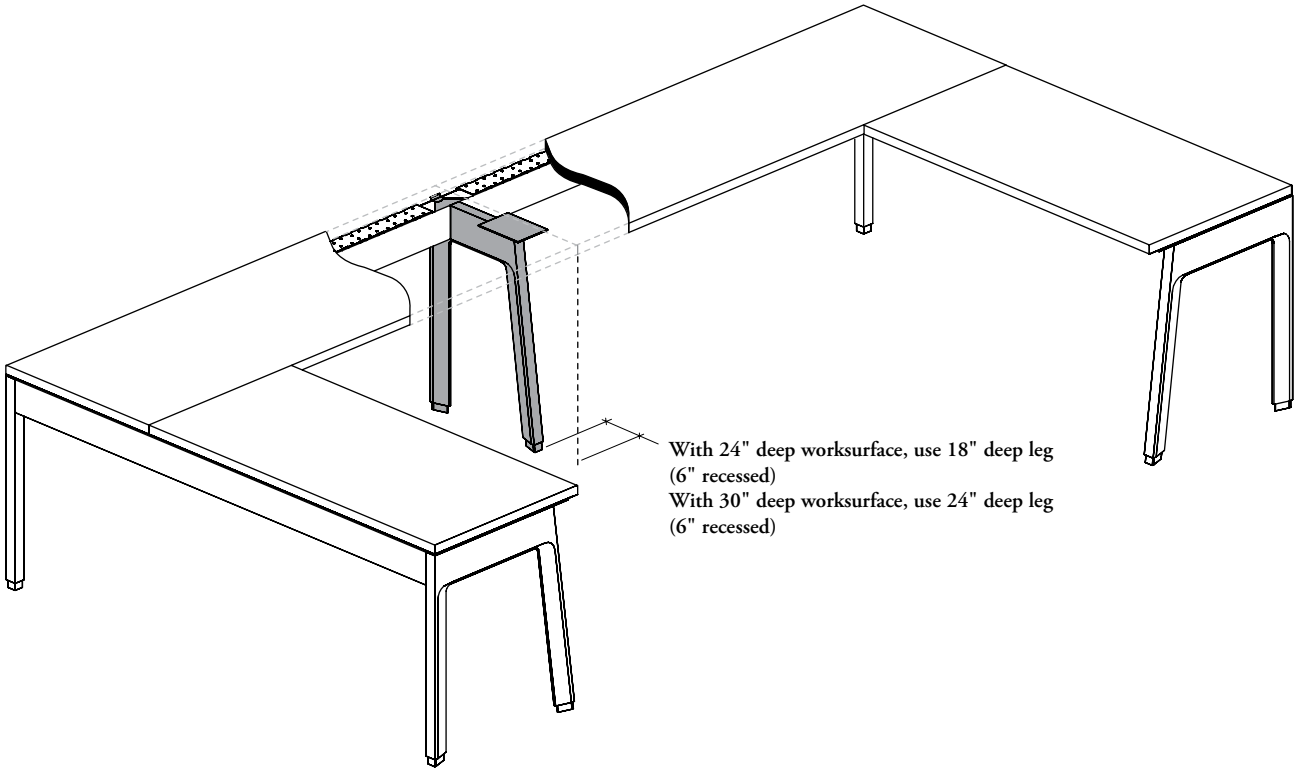

- An In-Line Single-Sided Structural Leg can be used as an intermediate support in a shared position between two worksurfaces. The leg supports both worksurfaces and can be full depth or 6" recessed from the user edge of the worksurface
- No suspended or semi-suspended credenza, or suspended pedestal/cubby can be suspended to a recessed leg. The leg must be specified of the same depth than the worksurface to support a storage

planning with recess depth structural leg (continued)

The following restrictions are only applicable with In-Line Single-Sided Structural Legs

for single-sided configuration – recessed depth application

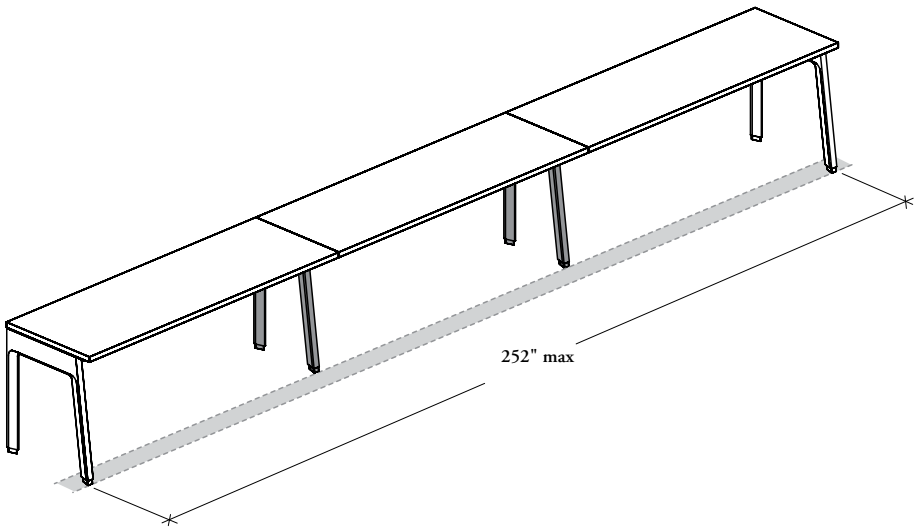

Bench Application

Full depth Structural Leg is required at each 252"

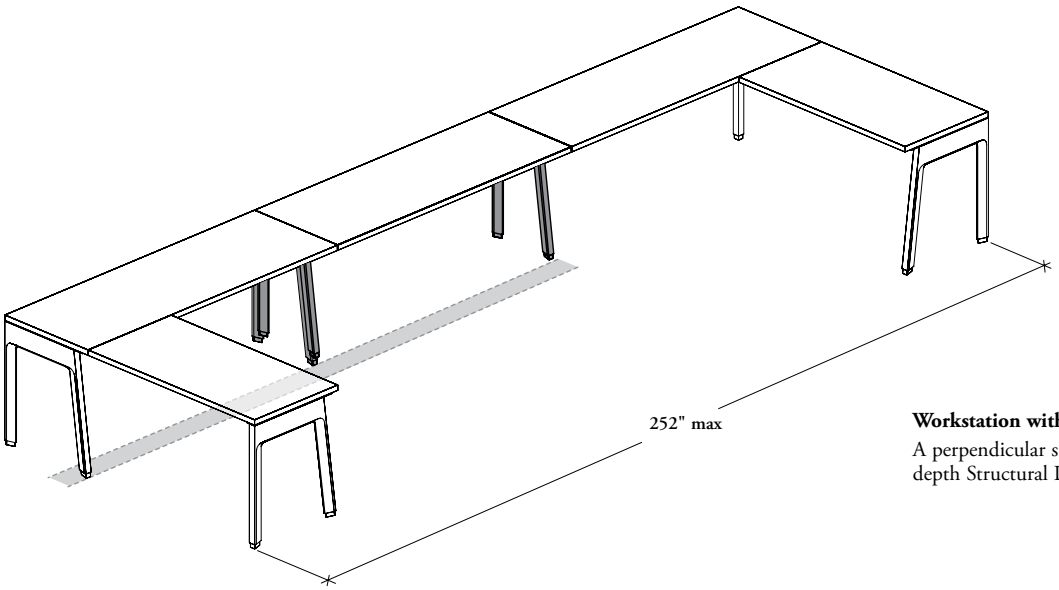

Workstation with Returns

A perpendicular structural beam can replace a full depth Structural Leg

planning with recess depth structural leg (continued)

The following applications are only applicable with In-Line Double-Sided Structural Legs

for double-sided configuration – recessed depth application

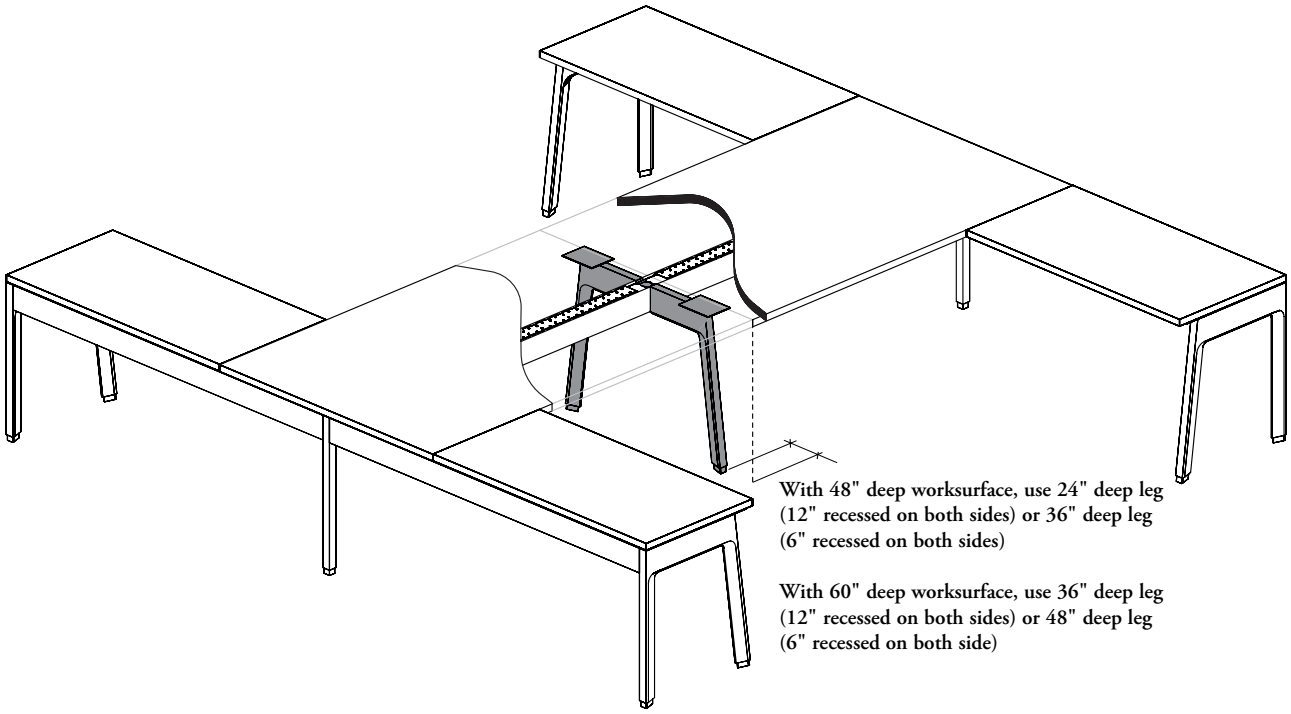

- An In-Line Double-Sided Structural Leg can be used as an intermediate support in a shared position between two worksurfaces. The leg supports both worksurfaces and can be full depth 6" or 12" recessed from the user edge of the worksurface
- No suspended or semi-suspended credenza, or suspended pedestal/cubby can be suspended to a recessed leg. The leg must be specified of the same depth than the worksurface to support a storage

planning with recess depth structural leg (continued)

- The following restrictions are only applicable with In-Line Single- and Double-Sided Structural Legs
- In applications with peninsulas or return worksurfaces, a recessed leg is appropriate for providing support at the junction of the rectangular worksurfaces. However, the maximum width of the peninsula or return worksurface will be reduced accordingly with the recess dimension of the In-Line Structural Leg

for single- & double-sided configuration – recessed depth restriction

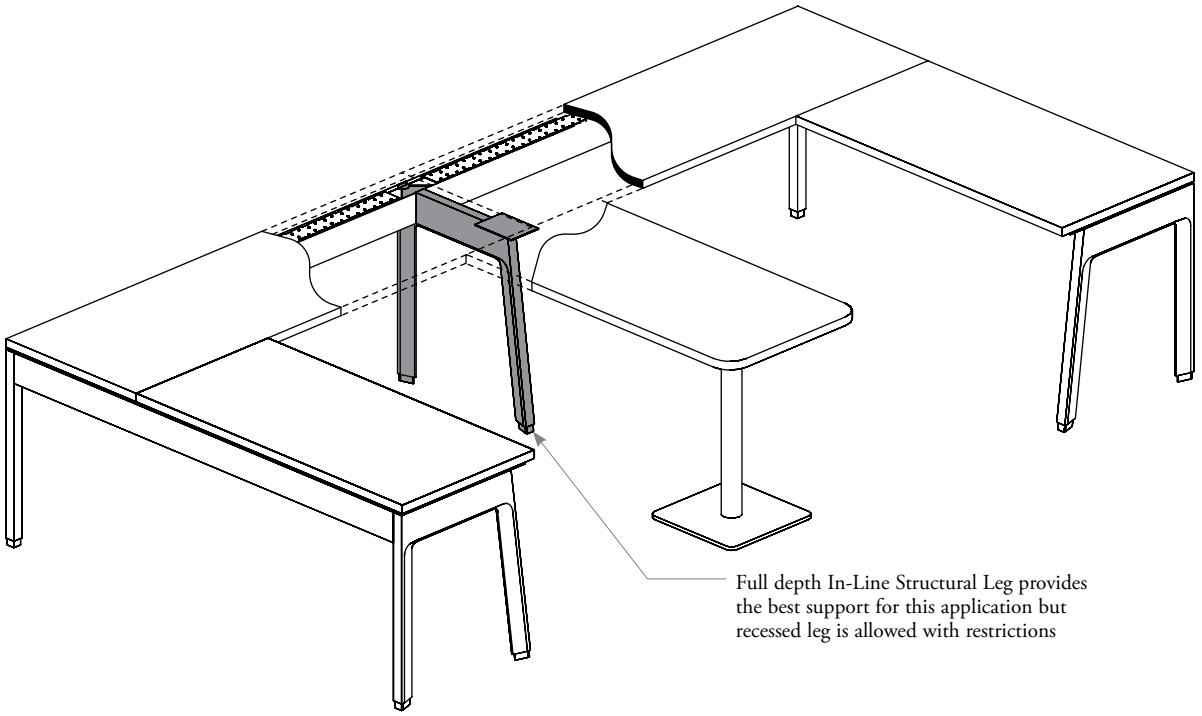

Peninsula or return worksurfaces with recessed In-Line Structural Leg

The maximum worksurface width that can be attached to the front edge of worksurfaces is 72". Using a recessed in-line leg will reduce this maximum width accordingly with the value of the recess. Additional Worksurface Reinforcing Channels (JNWRC) may be needed, refer to the Worksurfaces section for details

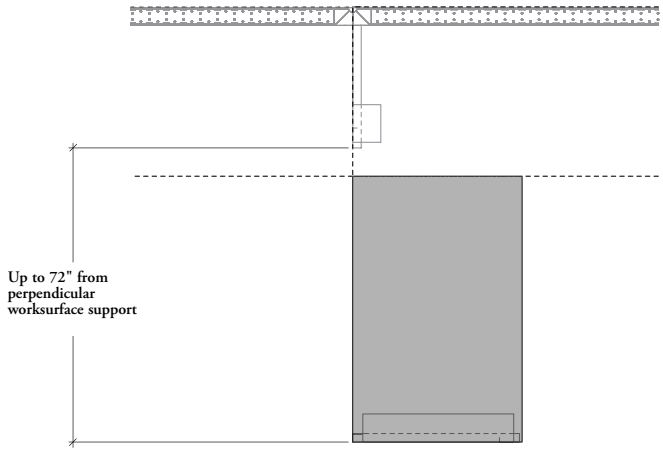

planning with recess depth structural leg (continued)

A recessed leg is mandatory to provide support and additional kneespace clearance with 90" or 96" wide worksurfaces

for single- & double-sided configuration – recess depth restrictions (continued)

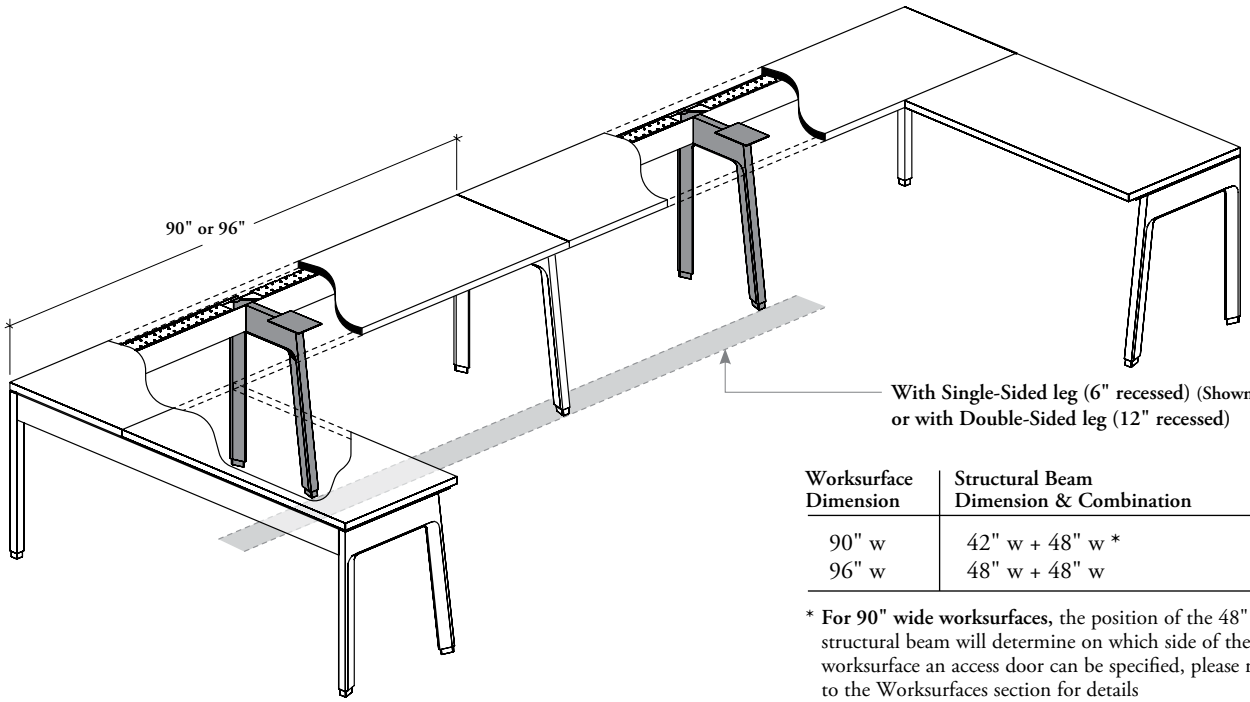

Worksurface Dimension	Structural Beam Dimension & Combination
90" w	42" w + 48" w *
96" w	48" w + 48" w

* **For 90" wide worksurfaces,** the position of the 48" wide structural beam will determine on which side of the worksurface an access door can be specified, please refer to the Worksurfaces section for details

Workstations with worksurfaces wider than 84"

- A Rectangular Worksurface can also be specified 90" or 96" wide but a Structural Leg is required and must be used as an intermediate support to provide floor support
- The position of the leg is the same regarless of the worksurface edge profile, and is always 6" or 12" from the user edge of the worksurface
- The combination of two structural beams is necessary to support 90" or 96" wide worksurfaces, refer to Beam Combination listed above for appropriate dimension combinations
- A full depth Structural Leg is also required to join two consecutive 90" or 96" worksurfaces

structural post with front leg basics

The following outlines the most common positions for Structural Posts with Front Leg in an Expansion Cityline workstation.

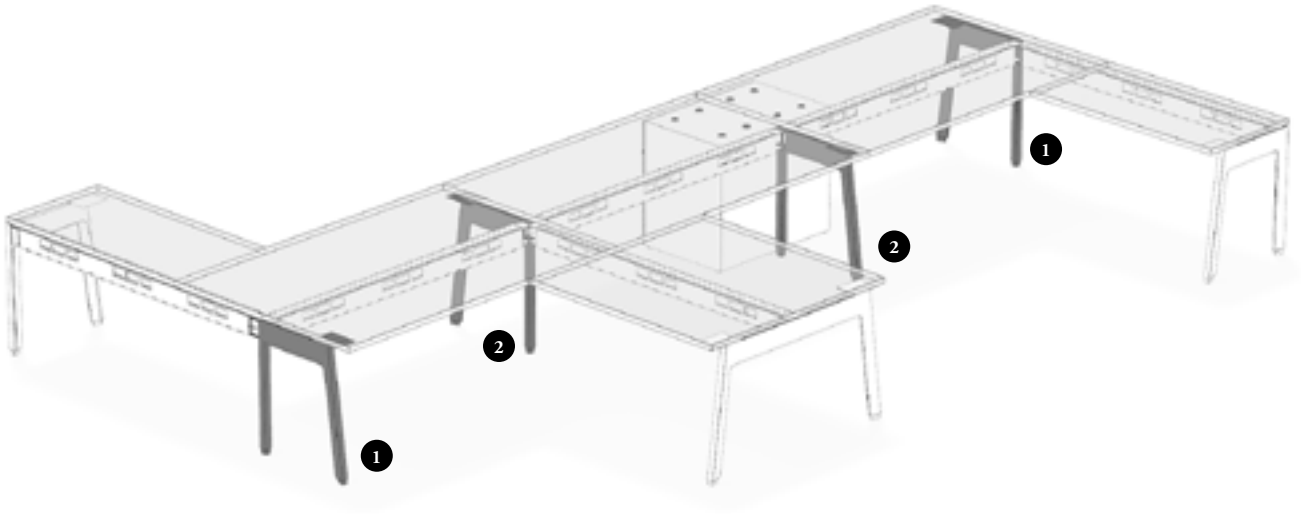

Structural Post with Front Leg (JNDPF)

- Only available with Angled (A) front leg profile and with End or In-Line Structural Post
- Are available in End – Left, End – Right or In-Line – Double-Sided Beam configurations
- Available in depths 18" to 30" (6" increments)
- Can be used with Single- and/or Double-Sided Structural Beams (JNDBB) or Chicago Structural Beams (JNDCB) dependently on configuration selected
- When specified, a Top Cover or a Worksurface Bracket is included
- Height is 29" from the finished floor to the top of the finished worksurface with a leveling range of 3"
- Comes with Leveler Cover to hide the black leveler for aesthetic look. The Leveler Cover will match with the post and leg finish

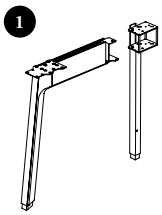

End – Left (L) (Shown)
or
End – Right (R)

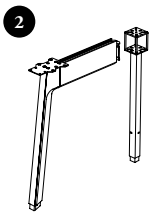

In-Line – Double-Sided Beam (I)

understanding structural post with front leg

end position – offset

- Used in end of run only
- Can be specified left (Shown) or right
- Front Leg is contiguous to a Single-Sided Beam and perpendicular to a Double-Sided Beam

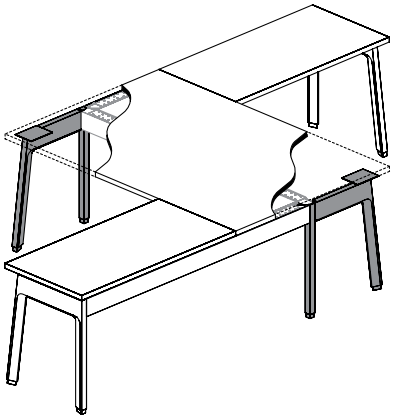

in-line position – offset

- Designed for offset applications only
- Used between two contiguous Double-Sided Beams
- Post connector can receive one Single- or Double-Sided (Shown) Beam contiguously to the Front Leg

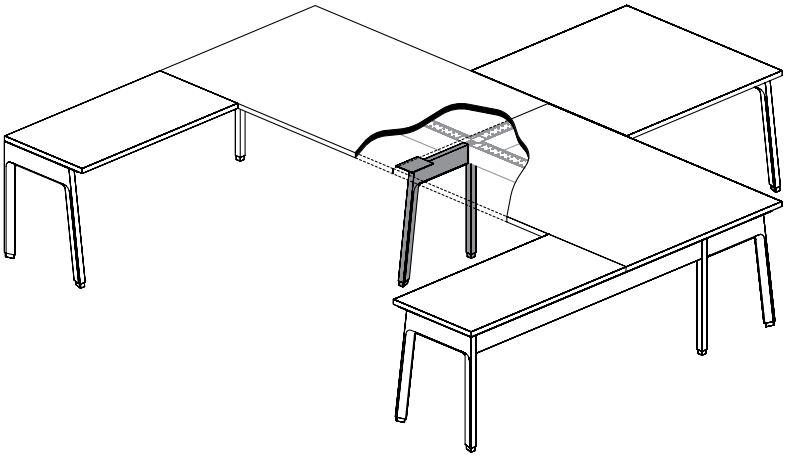

in-line position – storage

- Used between two contiguous Double-Sided Beams
- Storage can be used as worksurface support on the other side of the Front Leg

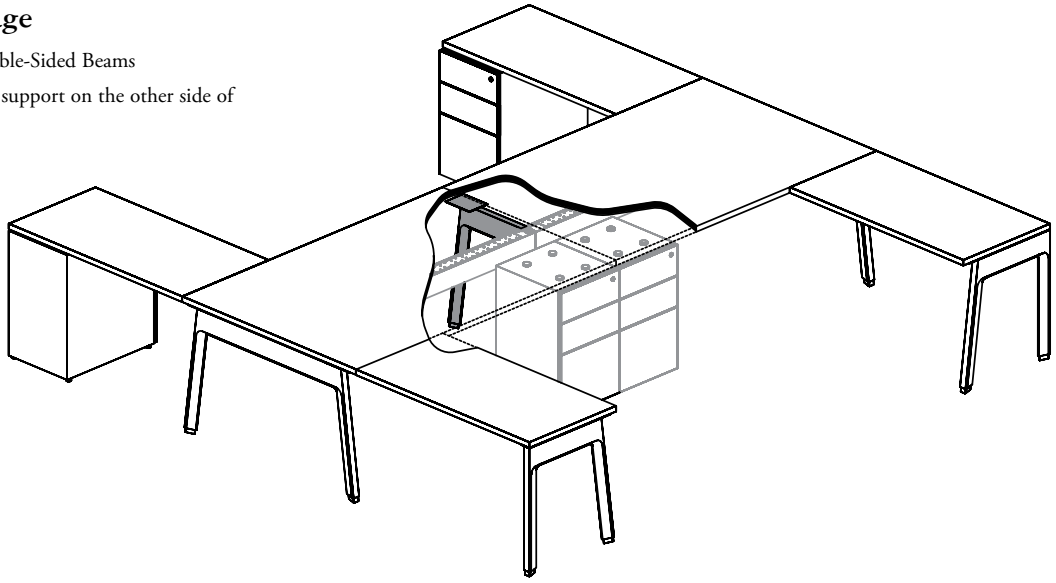

understanding structural post with front leg (continued)

The following should be considered when planning with Structural Post with Front Leg.

reconfigurability

- The front leg of the Structural Post with Front Leg can be replaced by a Single- or Double-Sided Beam dependently on configuration
- **Example:**

  End Front Legs on both ends can be replaced by single-sided beams to allow the installation of returns. In-Line Front Leg can also be replaced by a single- or double-sided (Shown) beam to allow installation of worksurfaces on both sides. All posts of Structural Posts with Front Leg are still used in this new configuration
- This reconfiguration allows to change the workstation without touching the electrical and data wire management

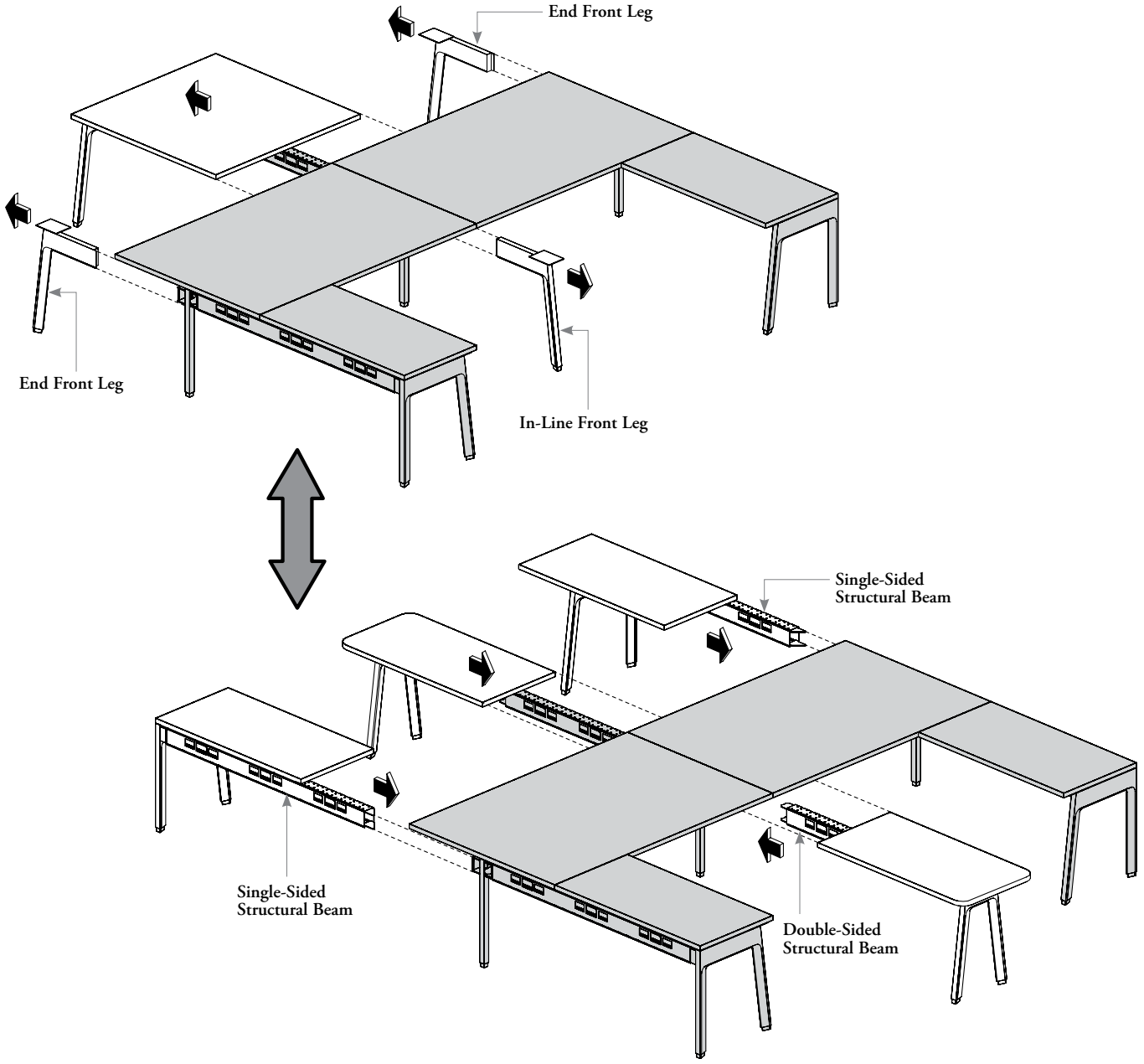

planning with structural post with front leg

- Can support worksurfaces, suspended pedestals/cubbies, suspended and semi-suspended credenzas
- In combination with Double-Sided Worksurfaces, the depth of the Post with Front Leg must be half of the depth of the worksurface
- A worksurface, a Semi-Suspended or a Suspended Credenza is mandatory to maintain the beam and Front Leg square and strong. A hiSpace or Navigate Height-Adjustable Table with a Table Attached Stabilizer for Structure can also be used
- Two Structural Post with Front Leg configurations are available:

end position

- The Structural Post with Front Leg can be covered with worksurfaces

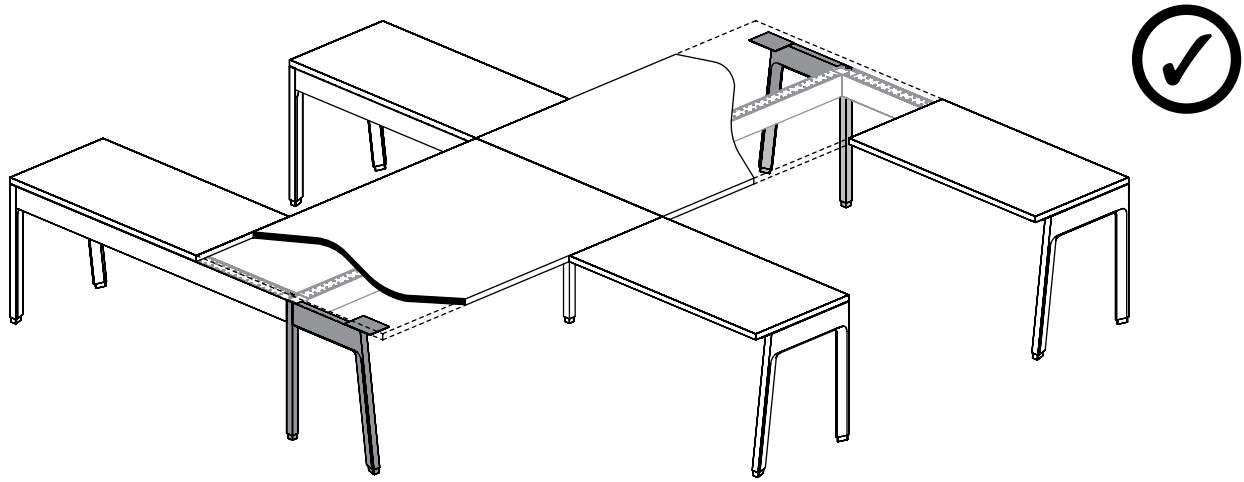

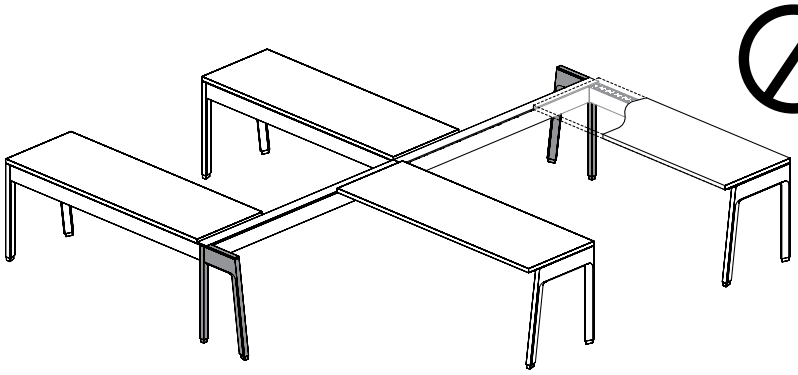

When exposed, the Structural Post with Front Leg **cannot** be used alone

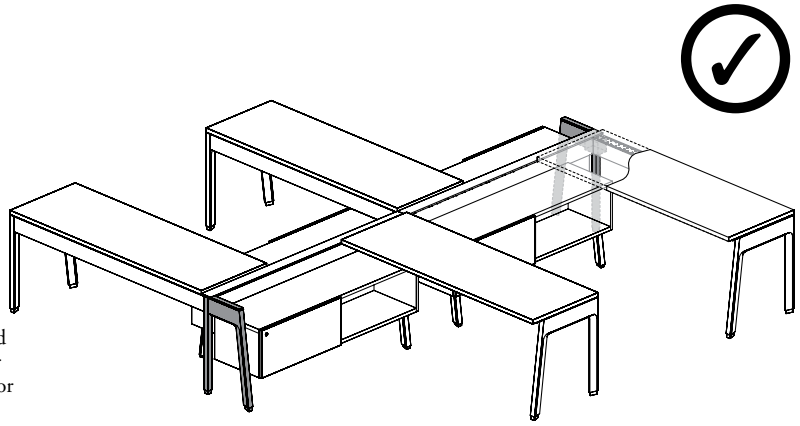

Each exposed Structural Post with Front Leg needs to be attached to a suspended (JNBSF, JNBSO, JNBSOO, JNBSC) or semi-suspended (JNBDF, JNBDO, JNBDOO, JNBDC) credenza, or to a hiSpace or Navigate Height-Adjustable Table using a Table Attached Stabilizer for Structure (JNDST)

planning with structural post with front leg (continued)

The In-Line Post with Front Leg **cannot** be shifted

in-line position

- The Structural Post with Front Leg can be covered with worksurfaces

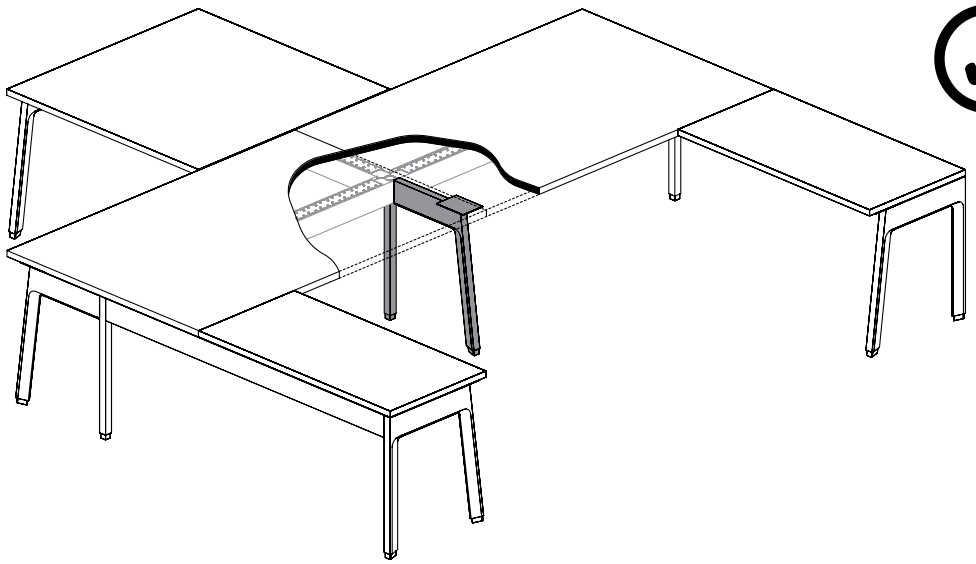

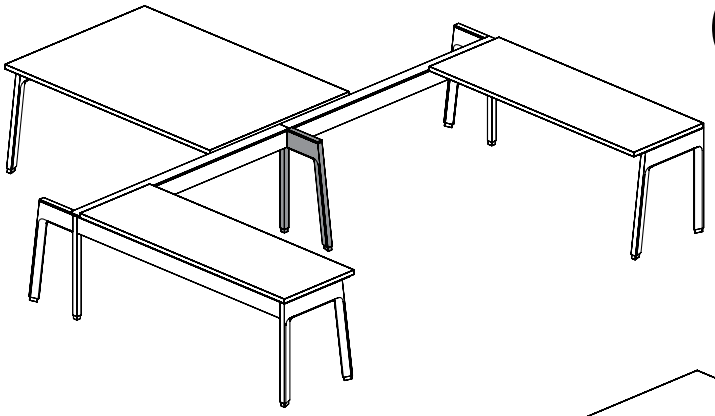

When exposed, the Structural Post with Front Leg **cannot** be used alone

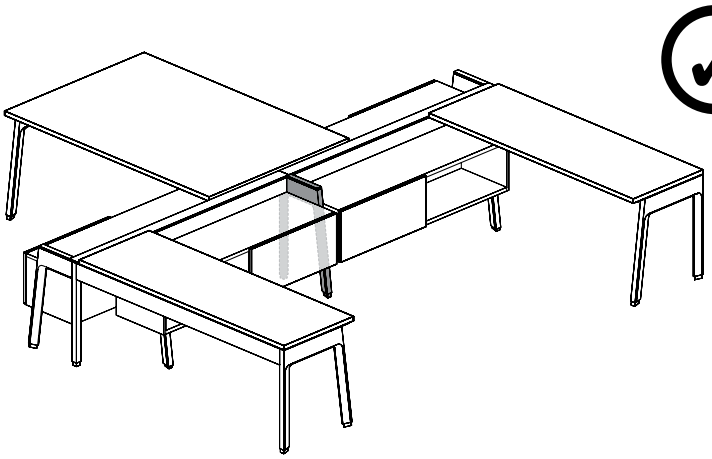

Each exposed Structural Post with Front Leg needs to be attached to a suspended (JNBSF, JNBSO, JNBSOO, JNBSC) or semi-suspended (JNBDF, JNBDO, JNBDOO, JNBDC) credenza, or to a hiSpace or Navigate Height-Adjustable Table using a Table Attached Stabilizer for Structure (JNDST)

planning with structural post with front leg (continued)

- A recessed leg provides additional kneespace clearance at centered worksurface and available with In-Line configuration only
- Can only be used in conjunction of two Double-Sided Beams only
- **Not** applicable with Structural Leg

for double-sided configuration – recessed support restriction

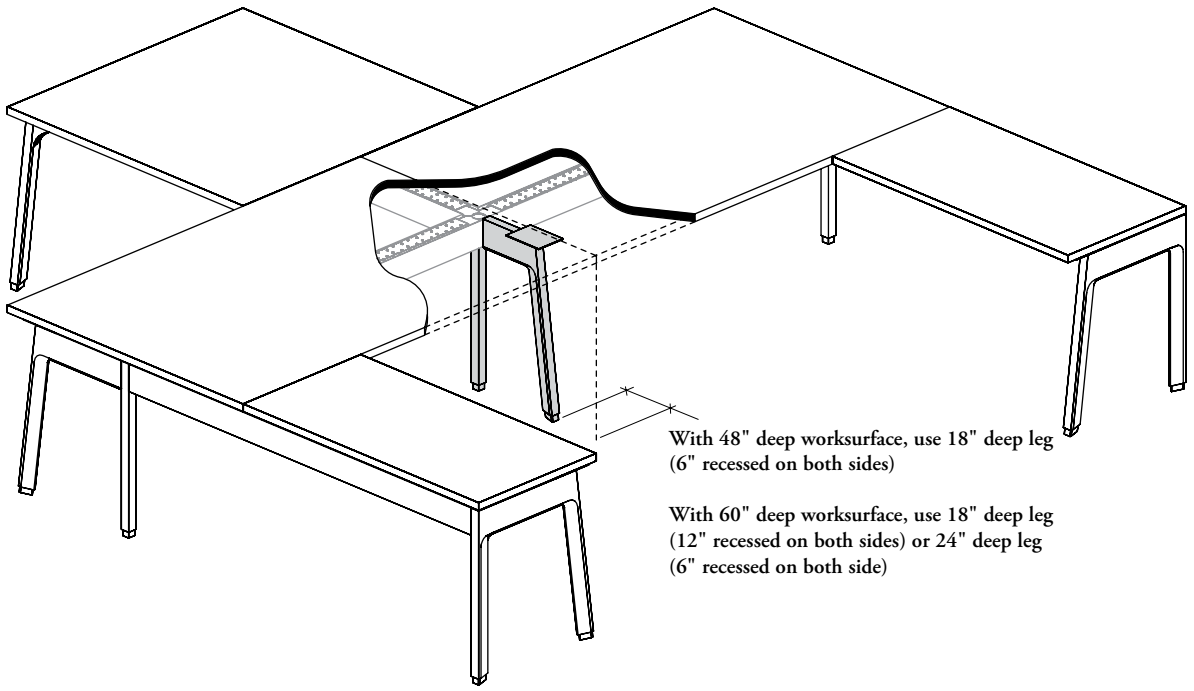

Workstations with Returns

- An In-Line Structural Post with Front Leg can be used as an intermediate support in a shared position between two worksurfaces. The leg supports both worksurfaces and can be full depth 6" or 12" recessed from the user edge of the worksurface
- No suspended or semi-suspended credenza, or suspended pedestal/cubby can be suspended to a recessed leg. The leg must be specified of the same depth than the worksurface to support a storage

understanding supporting storage

End Structural Post – Storage is required in combination with an end-tower to finish the end of a workstation with a storage. The In-Line Structural Post – Single- or Double-Sided Beam (JNDBB or JNDCB) and Structural Post with Front Leg can also be used in combination with supporting storage or in-line towers in the middle of workstations.

Four support connections are available:

end post – storage (E)

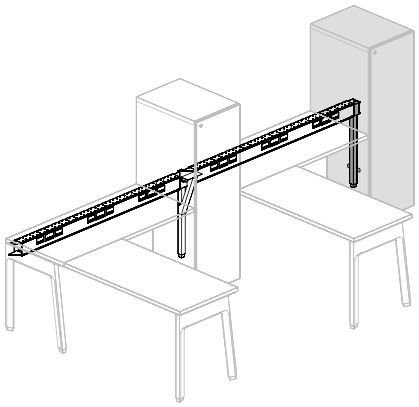

- The End – Storage Structural Post (JNDPUE) must be specified for this application
- Used in end of run only
- Can be applicable with Single- and Double-Sided configurations
- Can be used with End of Station Beam Towers only
- Must be specified in the With Storage Brackets option

in-line post – single-sided beam (T)

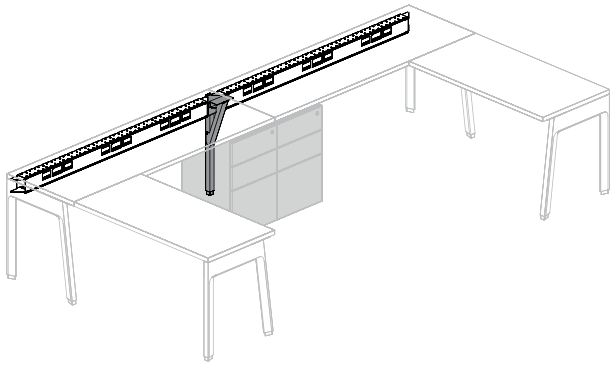

- The In-Line – Single-Sided Beam Structural Post (JNDPUT) must be specified for this application
- Used in middle of run only
- Can be applicable with Single-Sided configuration only
- Can be used with 28" high freestanding storage – Attached to Worksurface or with In-Line Beam Towers
- Must be specified in the With Storage Brackets option

understanding supporting storage (continued)

in-line post – double-sided beam (X)

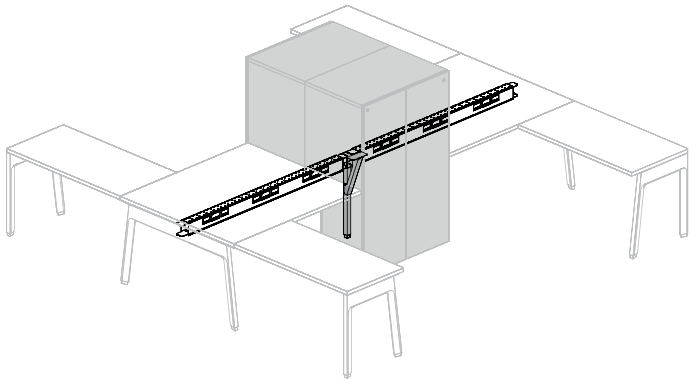

- The In-Line – Double-Sided Beam Structural Post (JNDPUX) must be specified for this application
- Used in middle of run only
- Can be applicable with Double-Sided configuration only
- Can be used with 28" high freestanding storage – Attached to Worksurface or with In-Line Beam Towers
- Must be specified in the With Storage Brackets option

in-line – structural post with front leg

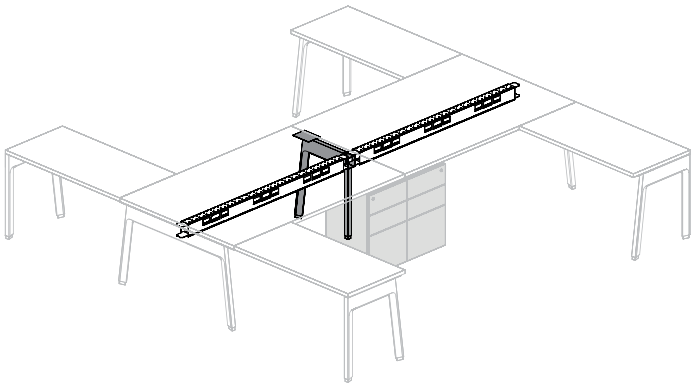

- The Structural Post with Front Leg – In-Line (JNDPFI) must be specified for this application
- Used in middle of run only
- Can be applicable with Double-Sided configuration only
- Can be used with 28" high freestanding storage – Attached to Worksurface only
- This post does not require any Storage Brackets option

planning with end storage structural post – supporting storage

The following should be considered when planning with End – Storage Structural Post.

- Is mandatory to be used in conjunction with End of Station Beam Towers to support the end of the structural beam run
- 28" high Freestanding Storage **cannot** be used with this post and need a Structural Leg to support the beam at the end of the run

end – storage application with beam towers

- A Structural Post specified in End – Storage configuration with the Storage Bracket option is required to support a single- or double-sided beam at the end of a run and maintain stability
- Only the Beam Towers with End of Station option can be used
- Hang-On Kit is included with Beam Towers and is used to support one end of the worksurface. They must be installed to maintain stability
- The width of the worksurface will have to be reduced accordingly to the width of the tower

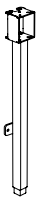

Structural Post End – Storage (JNDPU(E))

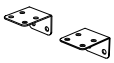

Hang-On Kit (JNFKH)

with single-sided beam

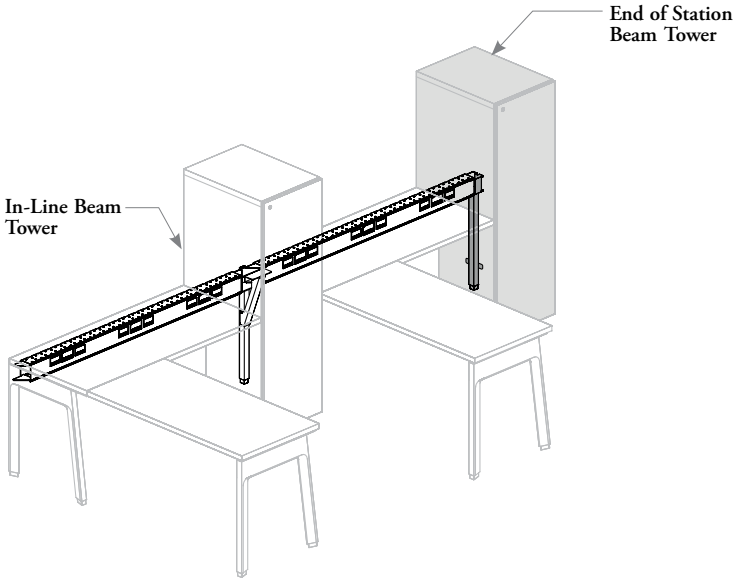

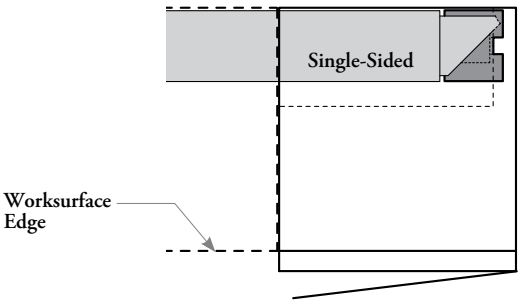

with double-sided beam

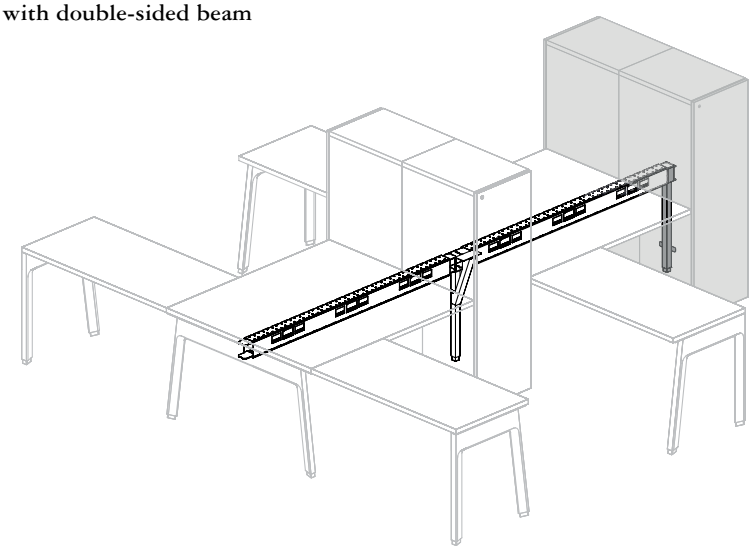

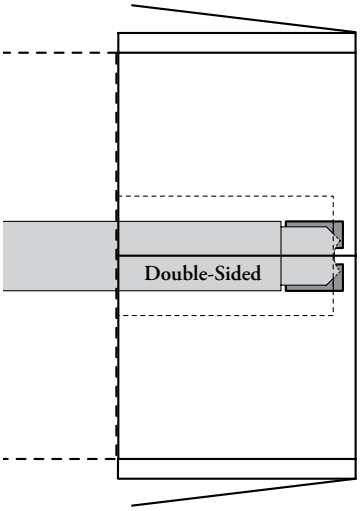

planning with in-line structural post – supporting storage

The following should be considered when planning with In-Line Single-Sided Beam Structural Post.

Is mandatory to be used in conjunction with In-Line Beam Towers or 28" high Freestanding Storage to support and connect two contiguous Single-Sided Beams in middle of workstations

in-line – single-sided application with 28" high freestanding storage

- A Structural Post specified in the In-Line – Single-Sided Beam configuration with the Storage Bracket option is required to connect two single-sided beams in middle of workstations and maintain stability
- The Supporting Storage Kit is included with 28" high storage with the Attached to Worksurface (A) option and is used to support one end of a worksurface. It must be installed to maintain stability

Supporting Storage Kit (JNFKS)

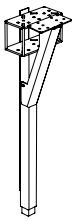

Structural Post In-Line – Single-Sided Beam with Storage Bracket (JNDPU(TW))

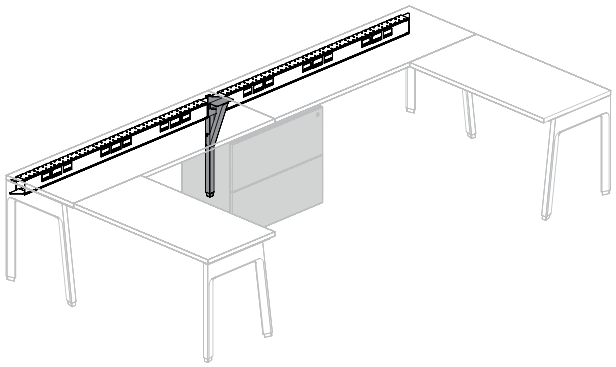

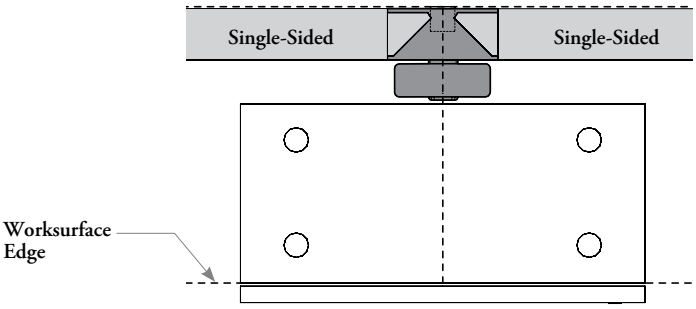

- One 28" high storage with the Attached to Worksurface (A) option can be used in conjunction with one post to support the junction of two worksurfaces
- Two 28" high storage with the Attached to Worksurface (A) option can also be used side-by-side for this application

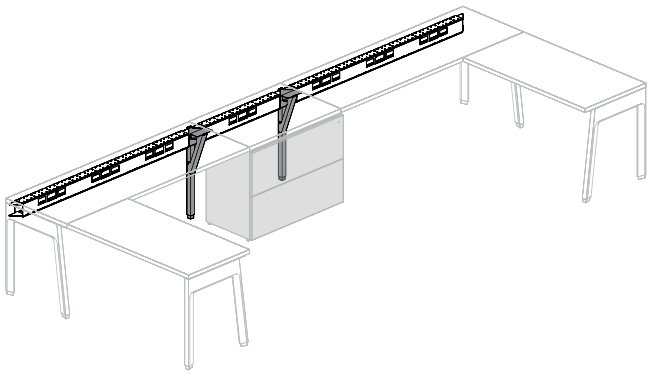

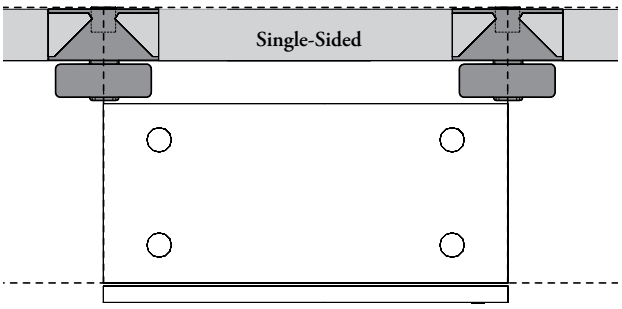

One 28" high storage with the Attached to Worksurface (A) option can be used in conjunction with two posts to support a worksurface of the same width and both junctions of worksurfaces on each side. The Lateral Linking Plates Kit (JNFKL) is mandatory for this application

Lateral Linking Plates Kit (JNFKL)

planning with in-line structural post – supporting storage (continued)

in-line – single-sided application with beam towers

- A Structural Post specified in the In-Line – Single-Sided Beam configuration with the Storage Bracket option is required to connect two single-sided beams in middle of workstations and maintain stability
- Only the Beam Towers with In-Line option can be used for this application
- The Hang-On Kit is included with Beam Towers and is used to support one end of a worksurface. It must be installed to maintain stability of worksurfaces on both sides

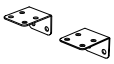

Hang-On Kit (JNFKH)

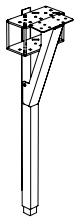

Structural Post In-Line – Single-Sided Beam with Storage Bracket (JNDPU(TW))

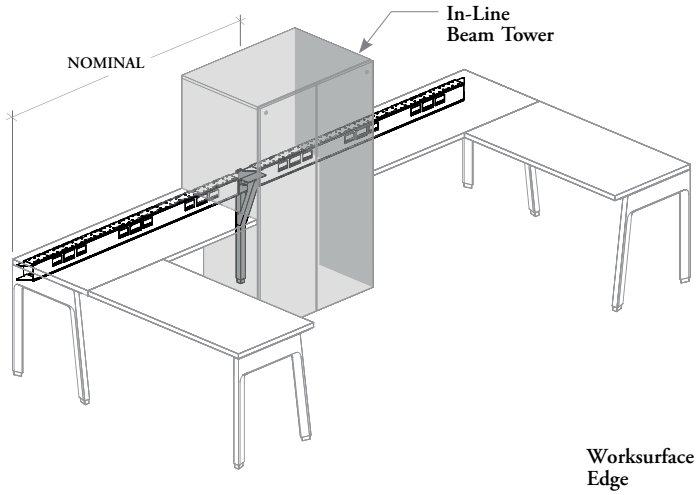

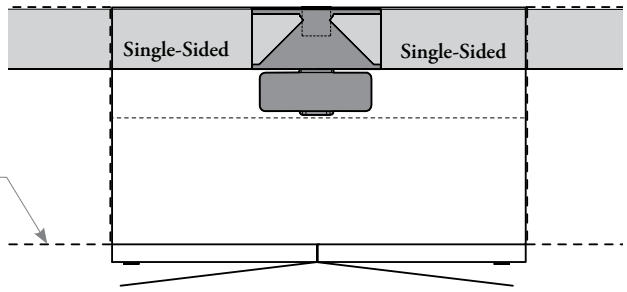

- One In-Line Beam Tower can be used centered or justified at post center
- The width of worksurfaces will have to be reduced accordingly to the width of the tower and its position

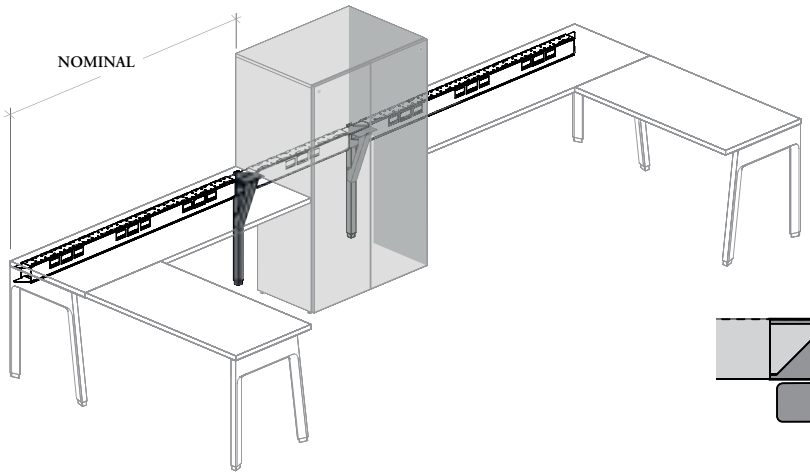

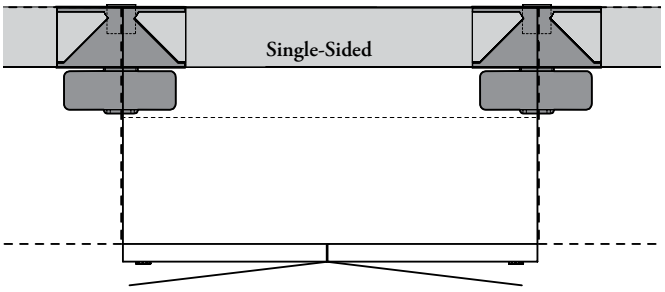

- One In-Line Beam Tower can be used centered between two posts and a beam of the same width
- The width of worksurfaces will equal the width of the beams on both sides

planning with in-line structural post – supporting storage (continued)

The following should be considered when planning with In-Line Double-Sided Beam Structural Post.

- Is mandatory to be used in conjunction with In-Line Beam Towers or 28" high Freestanding Storage to support and connect two contiguous Double-Sided Beams in middle of workstations
- Back-to-back freestanding storage are mandatory with this post. For using freestanding storage on one side only, please refer to Planning with In-Line Post with Front Leg – Supporting Storage on page 263

in-line – double-sided application with 28" high freestanding storage

- A Structural Post specified in the In-Line – Double-Sided Beam configuration with the Storage Bracket option is required to connect two double-sided beams in middle of workstations and maintain stability
- The Supporting Storage Kit is included with 28" high storage with the Attached to Worksurface (A) option and is used to support one end of a worksurface. It must be installed to maintain stability
- Comes with one Storage Bracket only

Supporting Storage Kit (JNFKS)

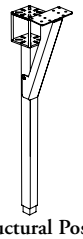

Structural Post In-Line – Double-Sided Beam with Storage Bracket (JNDPU(XW))

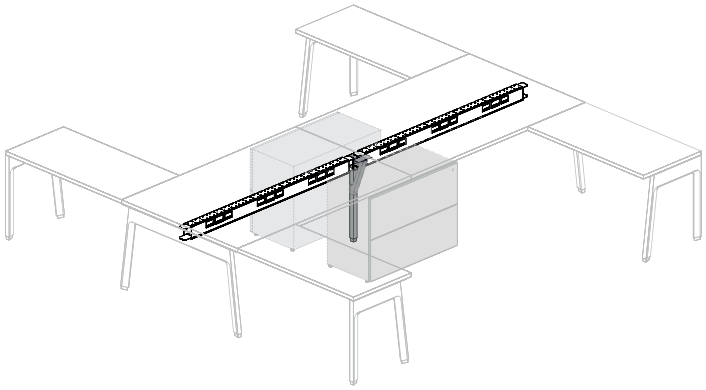

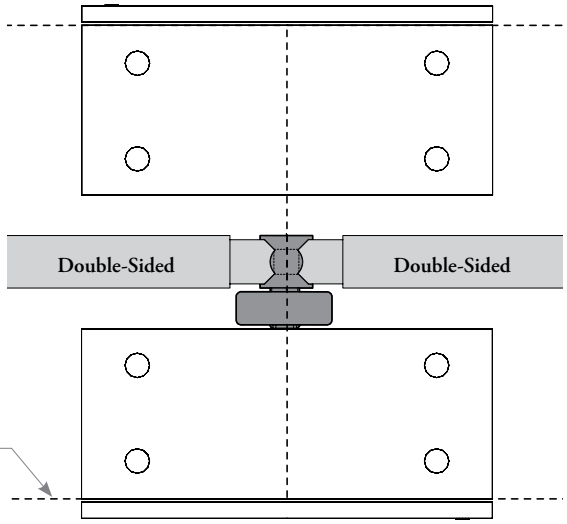

- Back-to-back 28" high storage with the Attached to Worksurface (A) option can be used on in conjunction with one post to support the junction of two worksurfaces
- For this application, two 28" high storage with the Attached to Worksurface (A) option can also be used side-by-side on each side of the beam

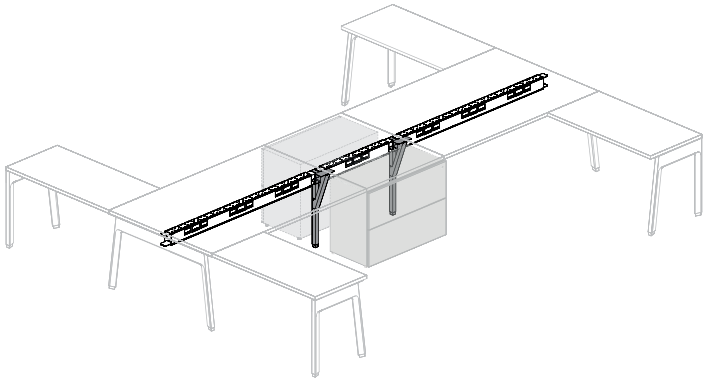

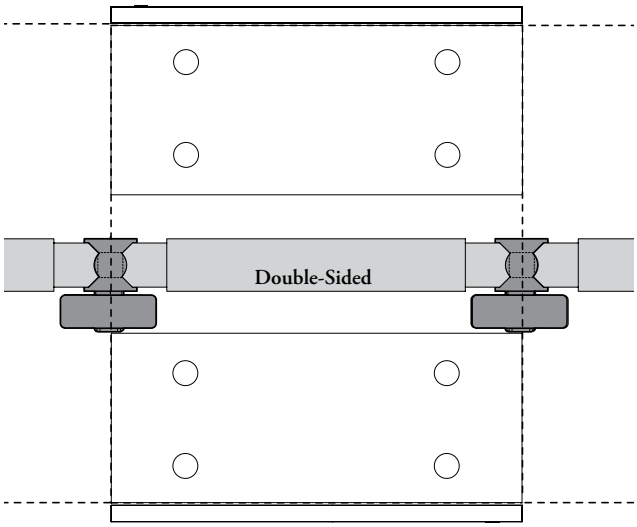

One 28" high storage with the Attached to Worksurface option can be used on each side of the beam in conjunction with two posts to support a worksurface of the same width and both junctions of worksurfaces on each side. Two Lateral Linking Plates Kits (JNFKL) are mandatory for this application

Lateral Linking Plates Kit (JNFKL)

planning with in-line structural post – supporting storage (continued)

in-line – double-sided application with beam towers

- A Structural Post specified in the In-Line – Double-Sided Beam configuration with the Storage Bracket option is required to connect two double-sided beams in middle of workstations and maintain stability
- Back-to-back Beam Towers with In-Line option are mandatory for this application
- The Hang-On Kit is included with Beam Towers and is used to support one end of a worksurface. It must be installed to maintain stability of worksurfaces on both sides
- Comes with one Storage Bracket only which is sufficient to maintain stability

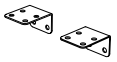

Hang-On Kit (JNFKH)

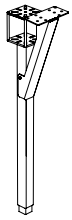

Structural Post
In-Line – Double-Sided
Beam with Storage Bracket
(JNDPU(XW))

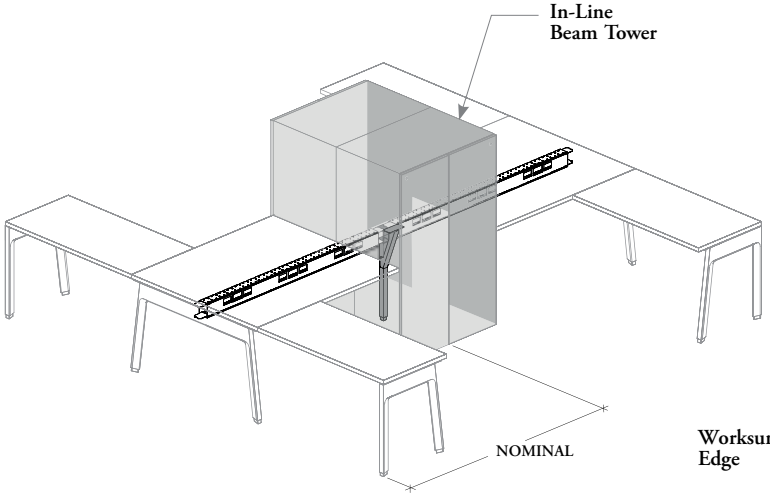

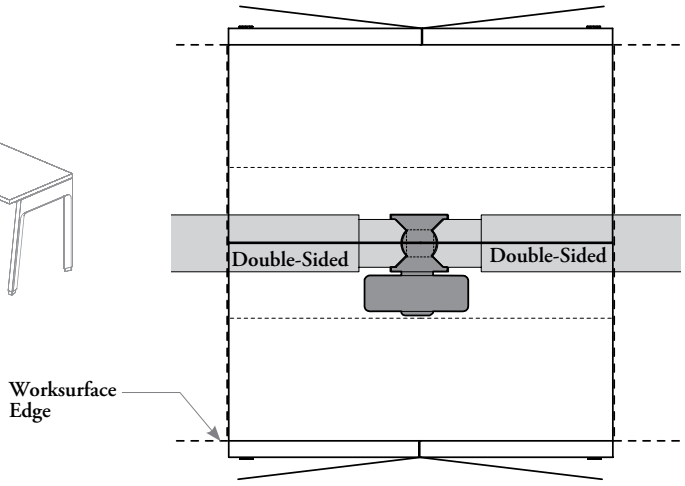

- Back-to-back In-Line Beam Towers can be used centered or justified at post center
- The width of worksurfaces will have to be reduced accordingly to the width of the tower and its position

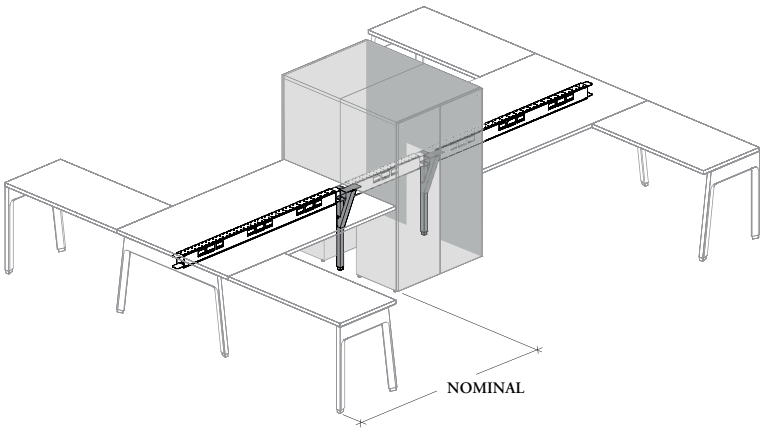

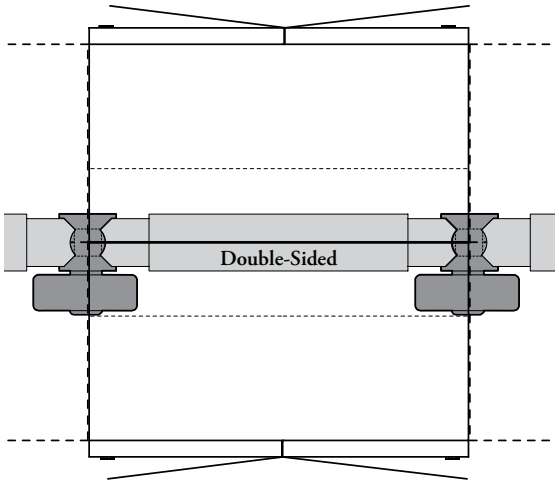

- Back-to-back In-Line Beam Towers can be used centered between two posts and a beam of the same width
- The width of worksurfaces will equal the width of the beams on both sides

planning with in-line structural post with front leg – supporting storage

The following should be considered when planning with In-Line Double-Sided Beam Structural Post with Front Leg.

Is mandatory to be used in conjunction with a 28" high Freestanding Storage to support and connect two contiguous Double-Sided Beams in middle of workstations

in-line application with 28" high freestanding storage

- A Structural Post with Front Leg specified with the In-Line – Double-Sided Beam option is required to support and connect two double-sided beams in middle of workstations
- The 28" high Freestanding Storage with the Attached to Worksurface (A) option is mandatory on the opposite side of the front leg
- The Supporting Storage Kit is included with 28" high storage with the Attached to Worksurface (A) option and is used to support one end of a worksurface. It must be installed to maintain stability

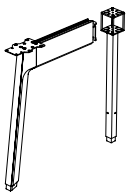

Structural Post with Front Leg In-Line – Double-Sided Beam (JNDPF(I))

Supporting Storage Kit (JNFKS)

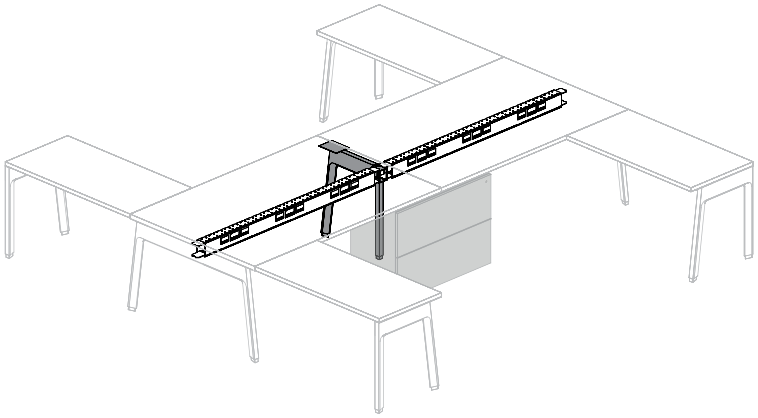

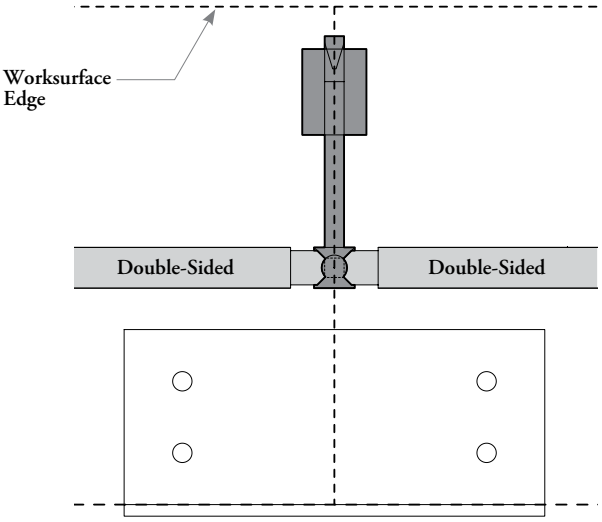

- One 28" high storage with the Attached to Worksurface (A) option can be used in conjunction with one post with front leg to support the junction of two worksurfaces
- Two 28" high storage with the Attached to Worksurface (A) option can also be used side-by-side for this application

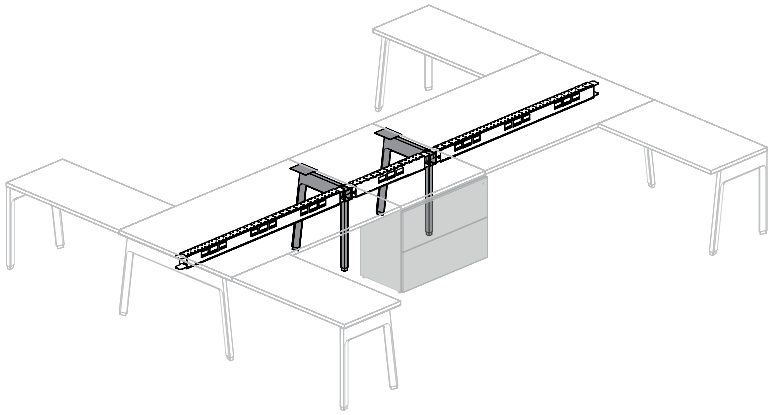

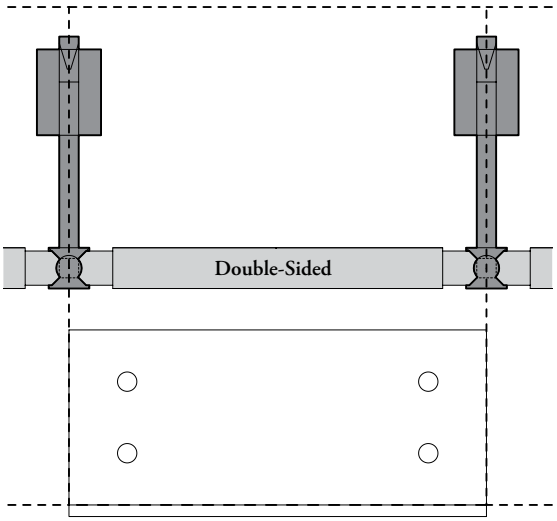

One 28" high storage with the Attached to Worksurface (A) option can be used in conjunction with two posts with front leg to support a worksurface of the same width and both junctions of worksurfaces on each side. The Lateral Linking Plates Kit (JNFKL) is mandatory for this application

Lateral Linking Plates Kit (JNFKL)

bench stabilizer basics

Expansion Cityline offers Bench Stabilizer to reduce reverberation in extreme cases on single- or double-sided workstation.

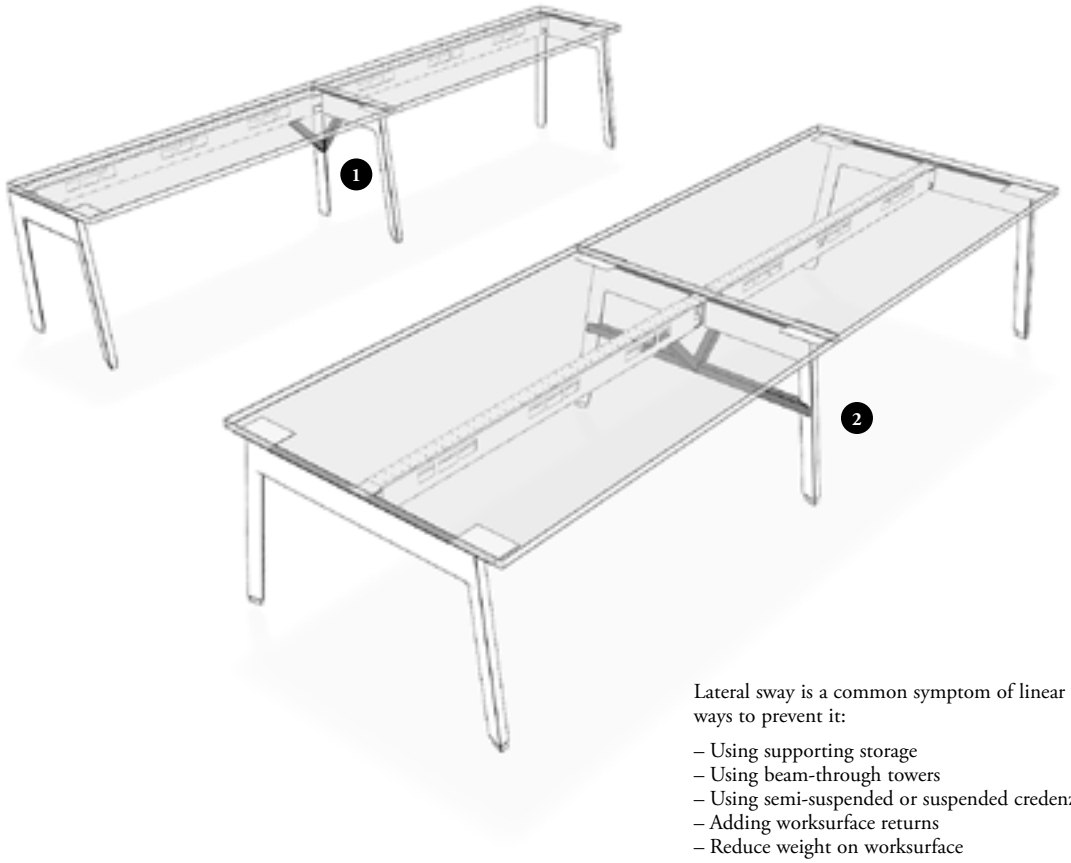

Lateral sway is a common symptom of linear planning but there are many ways to prevent it:

– Using supporting storage
– Using beam-through towers
– Using semi-suspended or suspended credenzas
– Adding worksurface returns
– Reduce weight on worksurface

For cases where neither of these solutions can be used, a Bench Stabilizer can be added

Bench Stabilizer (JNDBS)

- Used to reduce reverberation in extreme cases on single- double-sided workstation with extensive mounted storage or long lengths
- Only available with Angled (A) support style
- Are available in single- and double-sided leg configurations
- Available in structural leg depths 18", 24" or 30" for single-sided configuration and 36", 48" or 60" for double-sided configuration
- For use on Single- or Double-Sided Structural Leg and Beam (JNDBB or JNDCB)
- **Finishes:** Foundation, Mica and Accent

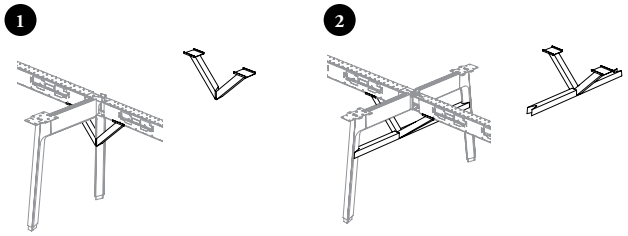

Single-Sided (S) **Double-Sided (D)**

wall anchored stabilizer for structure basics

Expansion Cityline offers stabilizers for wall to achieve stability on single-sided exposed beam workstation.

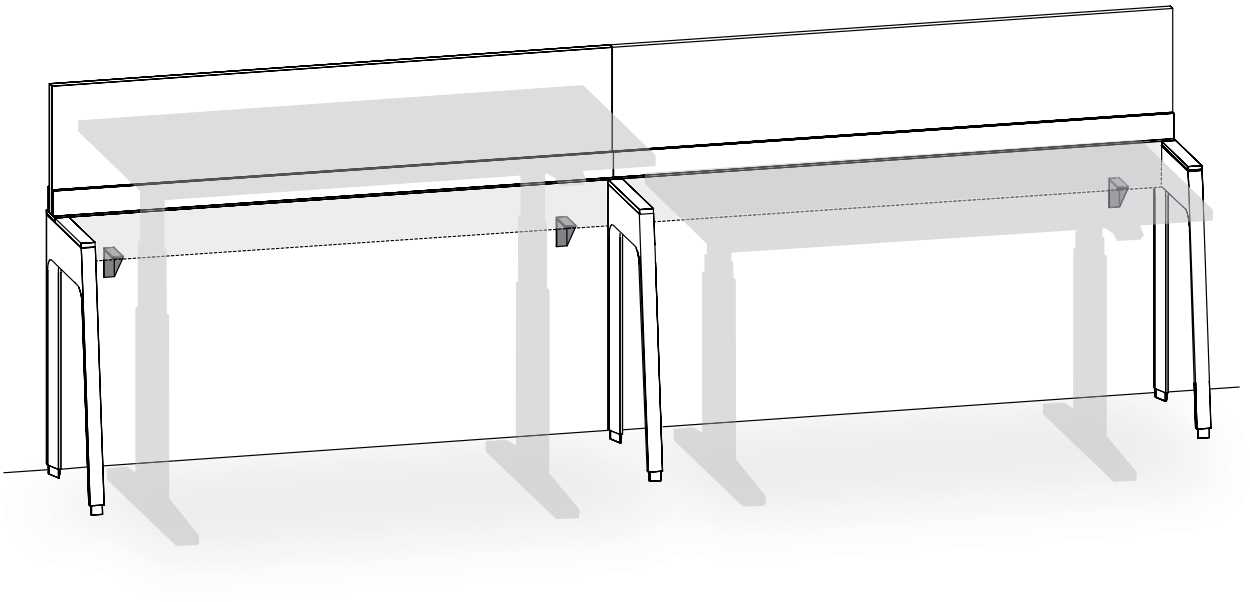

Wall Anchored Stabilizer for Structure (JNDSWB) E-Z compatible

- Can be used with Structural Beams (JNDBB) or Chicago Structural Beams (JNDCB) against a wall to maintain stability of the structure
- Must be attached to a building wall and a Single-Sided Beam only
- Creates a gap with the wall

Finishes
Foundation, Accent and Mica

planning with wall anchored stabilizer for structure

The following should be considered when planning with stabilizer and when the single-sided exposed structure is placed against a building wall.

single-sided exposed structure with wall anchored stabilizers

Wall Anchored Stabilizer for Structure (JNDSWB) is used to maintain stability of a single-sided exposed structure placed against a wall

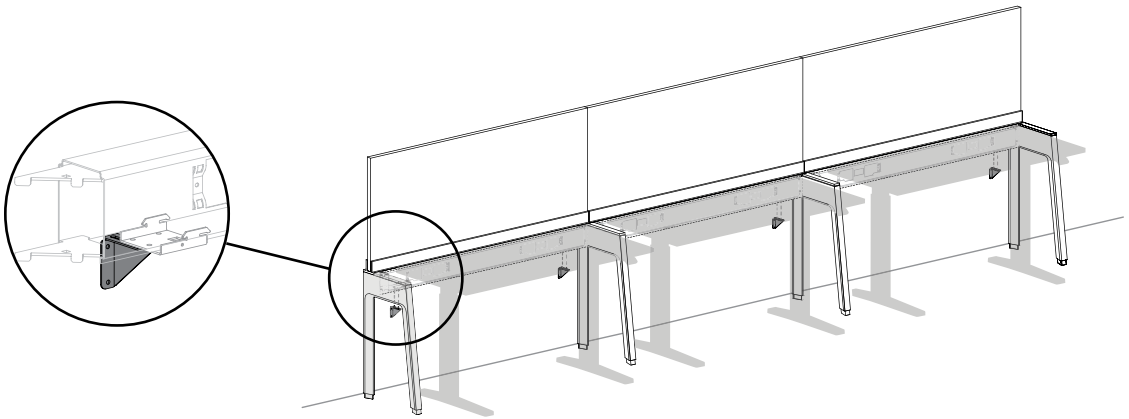

Stabilizer Positions are required

- Each Structural Leg – Single-Sided used in exposed structure application must be secured
- Each stabilizer must be secured on a wall stud or with an appropriate wall fixation hardware (**not** included). Refer to the installation guide for recommandations

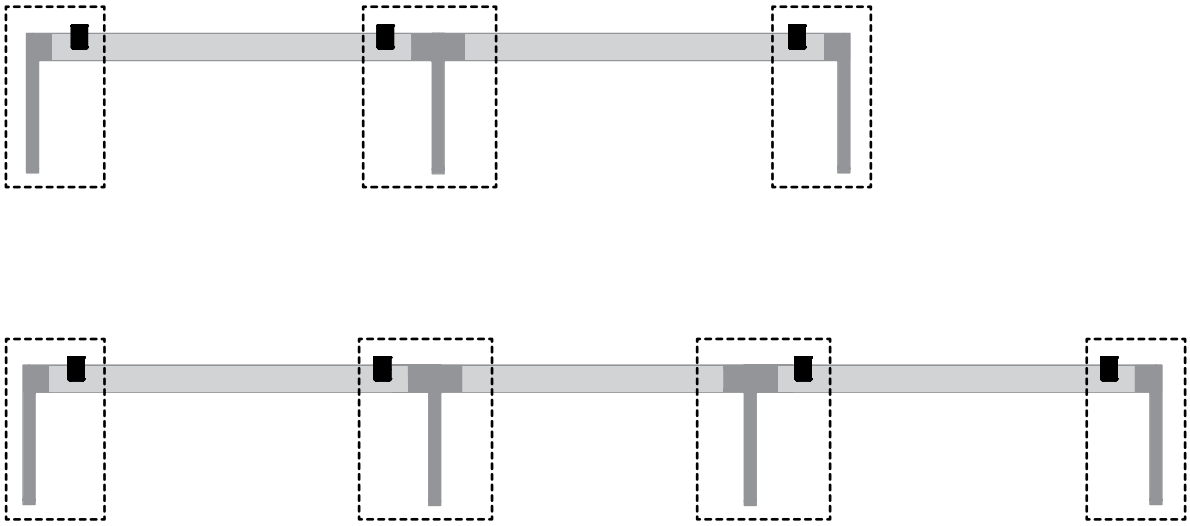

table attached stabilizer for structure basics

Expansion Cityline offers stabilizers for structure to achieve stability on single-sided exposed beam workstation.

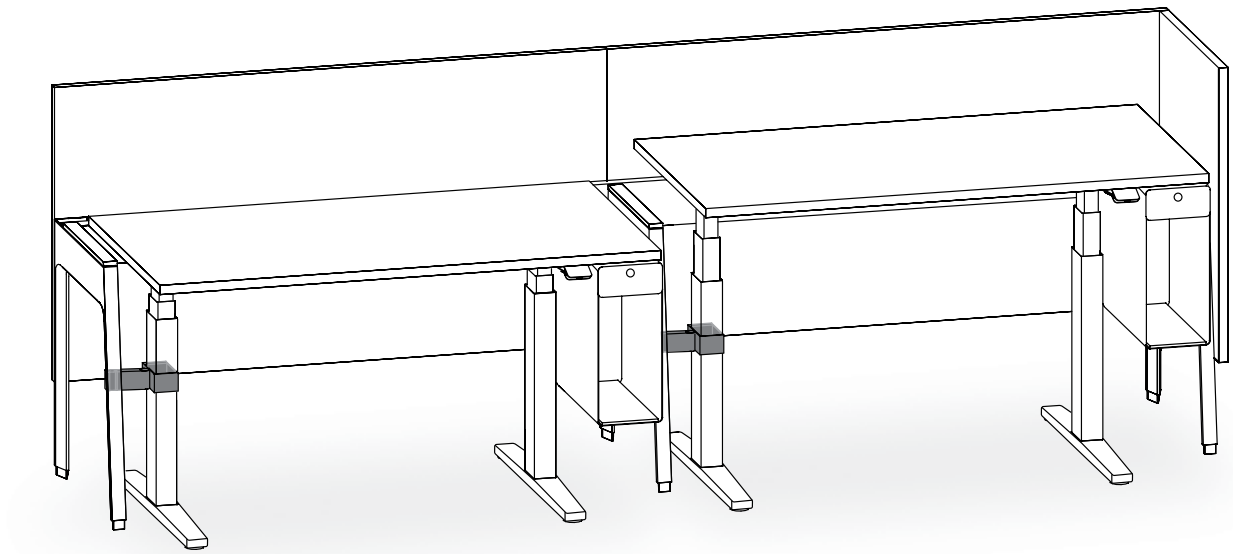

hiSpace (H)

Navigate (N)

Table Attached Stabilizer for Structure (JNDST) EZ compatible

- Can be used against a wall or along a corridor to maintain stability of the structure
- Can be used with Single- or Double-Sided Angled Structural Leg (A) (End-Left, End-Right or In-Line configuration) and with hiSpace (H) or Navigate Height-Adjustable Leg (N) only
- This stabilizer on one side must be inserted on integrated slots included with Structural Leg and the other side fixed to a hiSpace or Navigate height-adjustable leg
- **Cannot** be used in conjunction with an Vertical Wire Carrier (JNHEA) on the same side
- **Cannot** be used on Low Structural Legs

Finishes
hiSpace configuration is available in Ebony, Platinum or Very White
Navigate configuration is available in Foundation, Accent or Mica

planning with table attached stabilizer for structure

The following should be considered when planning with stabilizer and when the single-sided exposed structure is placed against a building wall or in corridor.

single-sided exposed structure with table attached stabilizers

- **Table Attached Stabilizer for Structure (JNDST)** is used to maintain stability of a single-sided exposed structure in a corridor or against a wall
- Product combinations are **not** all possible. 18" deep Structural Leg works with 23" deep hiSpace Quick Connect Height-Adjustable Mechanism or Navigate base. 24" deep Structural Leg works with 29" deep hiSpace Quick Connect Height-Adjustable Mechanism or Navigate base

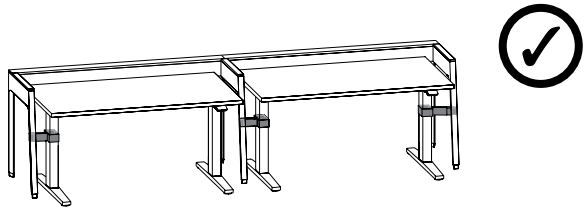

Table Attached Stabilizer for Structure can be used on both sides of a hiSpace or Navigate Height-Adjustable Table

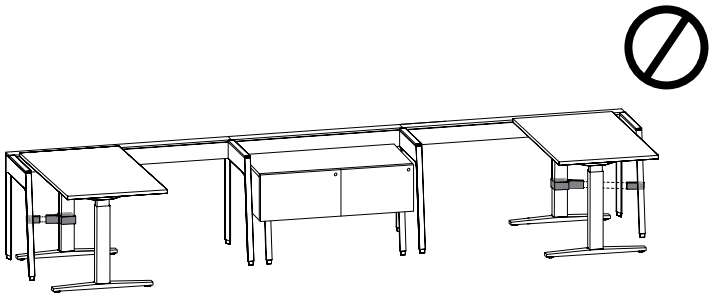

Table Attached Stabilizer for Structure cannot be used with hiSpace or Navigate Height-Adjustable Table placed perpendiculary to Structural Beam

Cannot be used on the same side than an Suspended Personal Storage – Standard (JNAUOD_S or JNAUED_S). If a stabilizer is required, the Suspended Personal Storage must be placed at the other end or the Height-Adjustable Table Frame Recessed Mounting option must be used

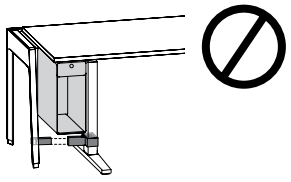

When Suspended Personal Storage – Standard is used on same side of Table Attached Stabilizer

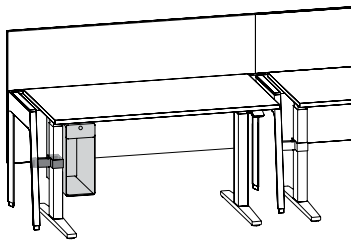

When Suspended Personal Storage – Height-Adjustable Table Frame Recessed is used

OR

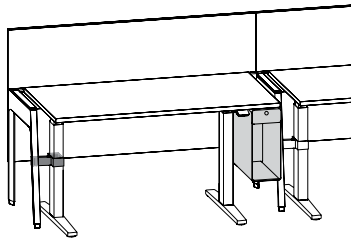

When Suspended Personal – Standard is used on opposite side of Table Attached Stabilizer

planning with table attached stabilizer for structure (continued)

single-sided exposed structure with table attached stabilizers (continued)

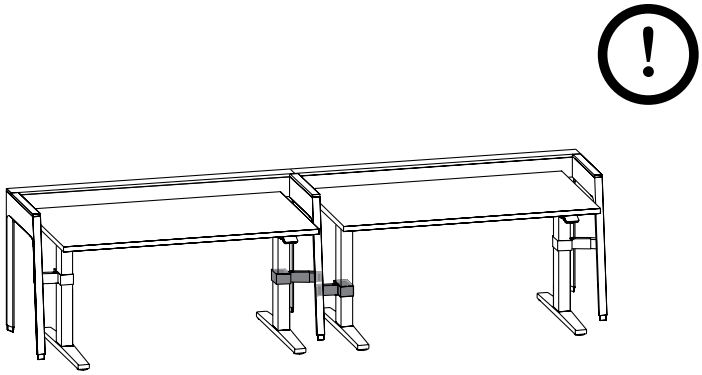

Only one Table Attached Stabilizer is necessary to stabilize a Single-Sided Structural Leg. Using a second Table Attached Stabilizer will make them vertically misaligned

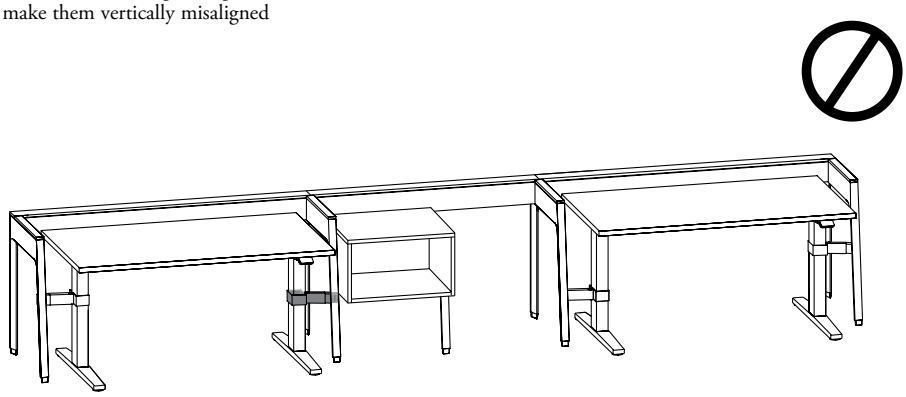

Table Attached Stabilizer for Structure **cannot** be used on the same Structural Leg that supports a Suspended or a Semi-Suspended Credenza

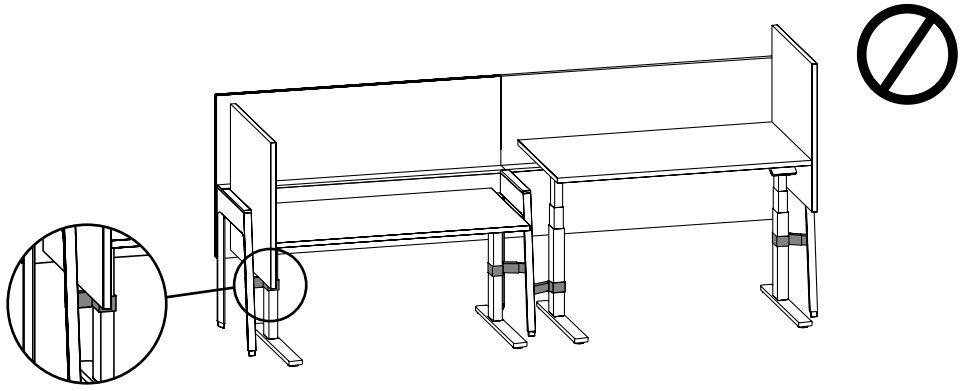

Table Attached Stabilizer for Structure **cannot** be used with Lateral or Elevated Screens inside the Structural Legs because they would hit each other along the adjustment range

understanding low structural leg – fence

Low Structural Legs – Fence support and connect structural beams in linear or 120° planning providing a variety of functionality for social spaces and height-adjustable table environment.

The use of Low Structural Leg – Fence represents a tripping over risk due to the low height of the structure. The furnishing shall only be used in a manner or in a location where someone tripping over is unlikely

Available in Double-Sided style only

Are installed at the end of one Double-Sided Beam or between two contiguous Double-Sided Beams (JNDBB or JNDCB)

1. Screws and nuts are also included to secure the beam connection to the Structural Leg – Fence
2. Come with two Top Covers to hide the top of the leg for an aesthetic look
3. Come with Leveler Covers hiding the black levelers for a more refined aesthetic

Provides a leveling range of 3" (-3/16", +2 13/16")

low structural leg – fence

4. Come with two angled vertical leg profiles on both sides

Two connections can be specified: End 5 or In-Line 6

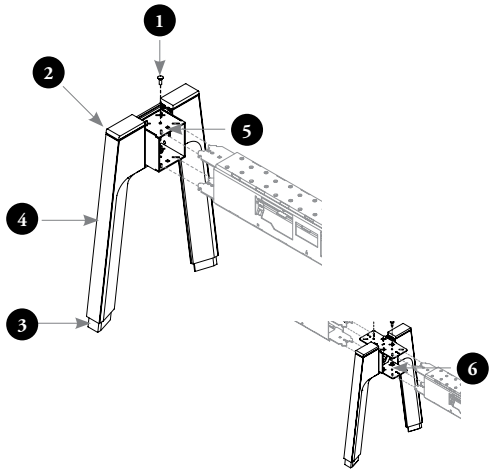

Two configurations are available:

end position

- Used in end of run only
- Used with Double-Sided Beams only

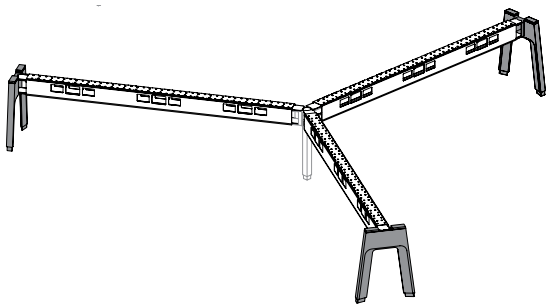

in-line position

- Used between two Structural Beams
- Used with Double-Sided Beams only

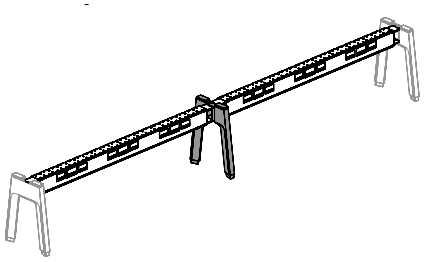

understanding low structural leg – fence (continued)

Two Low Structural Leg – Fence styles are available:

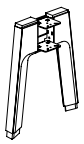

End
Low Structural Leg

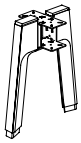

In-Line
Low Structural Leg

Top Cover Height

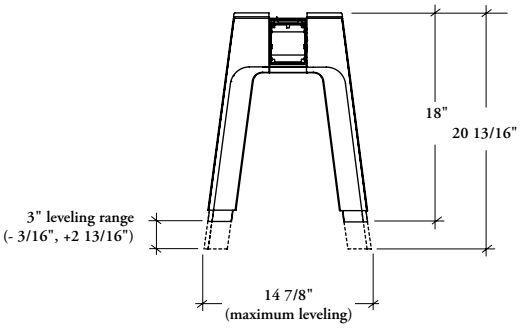

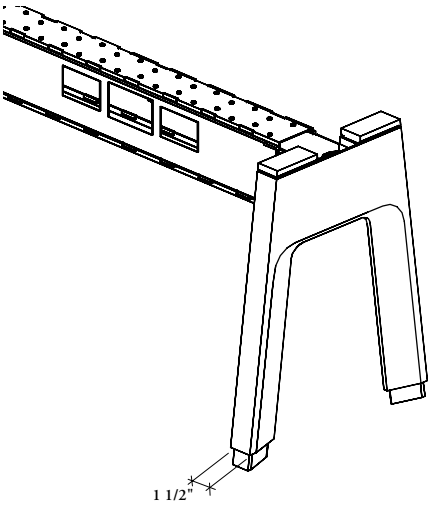

Slots on vertical parts

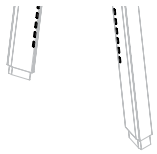

- The vertical parts come with integrated slots
- **Not** allowed to insert a Table Attached Stabilizer for Structure (JNDST)

low structural leg – fence basics

The following outlines the features of each of the Low Structural Leg – Fence available in Expansion Cityline.

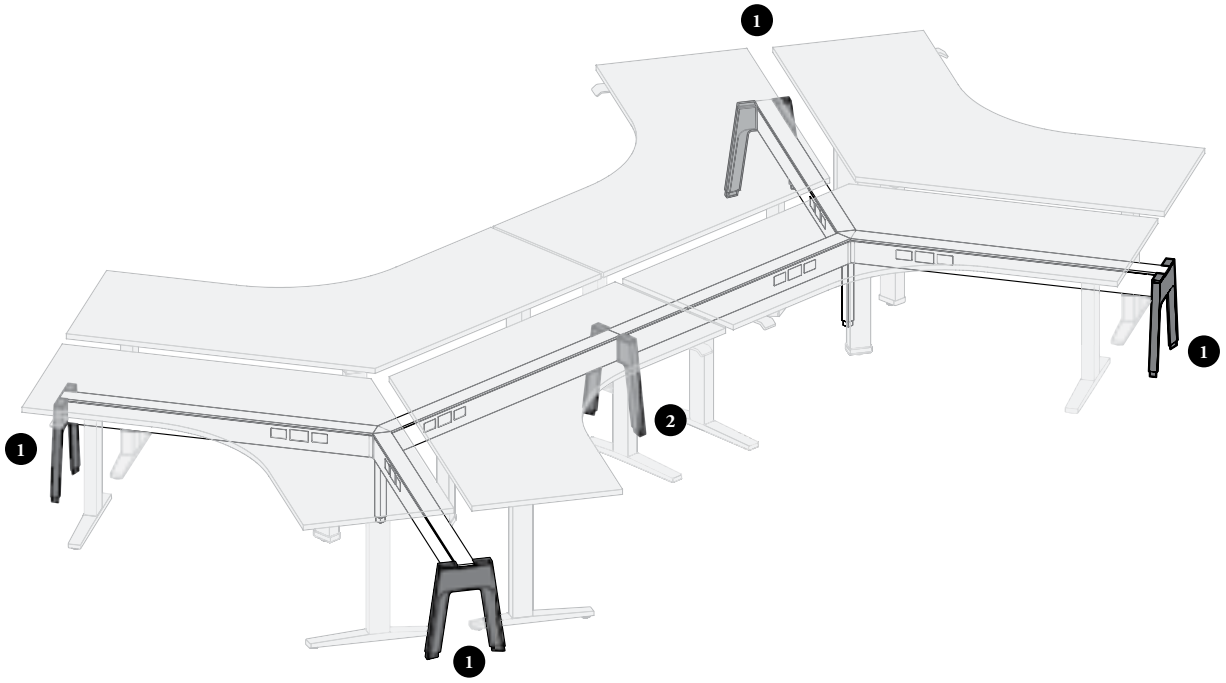

Low Structural Leg – Fence (JNDLLF)

- Only available with Angled leg profiles
- Are available in end or in-line configurations
- Available in 15" depth
- Can only be used with Double-Sided Structural Beams (JNDBB) or Chicago Structural Beams (JNDCB)
- Top Covers are always included
- Height is 18" from the finished floor to the top of the Top Cover with a leveling range of 3"
- Comes with a Leveler Cover to hide the black leveler for aesthetic look. The Leveler Cover will match with the leg finish

1

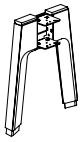

End (E)

2

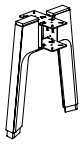

In-Line (I)

planning with low structural leg – fence

The following should be considered when planning with Low Structural Leg – Fence.

- Can be used in linear or 120° planning for heigh-adjustable table environment
- Low Structural Legs – Fence can be used in combination with Low Structural Post – 120° to support exposed beams in such height-adjustable table workstations

120° station

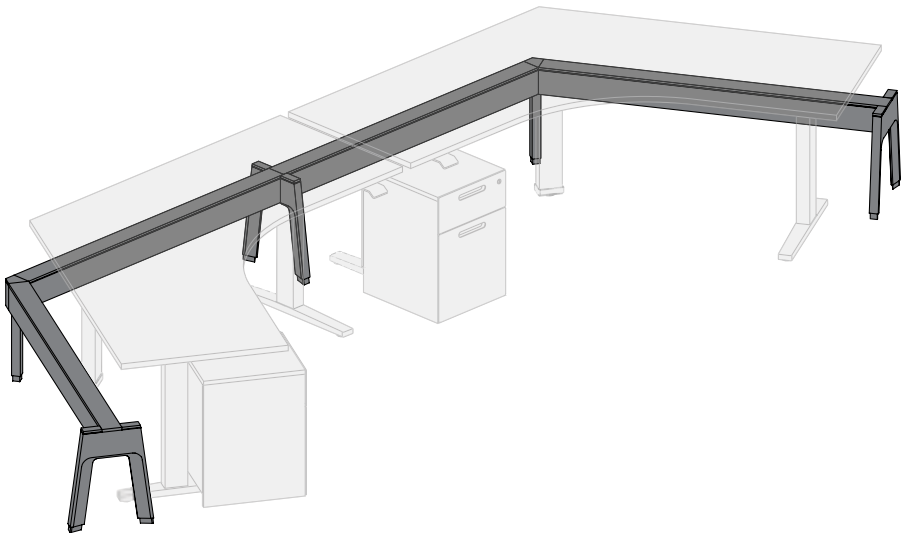

The combination of Low Structural Legs – Fence with Low Structural Posts – 120° is allowed to create a 120° exposed beams application

station without screen – no restriction

This furnishing shall only be used in a manner or in a location where someone tripping over is unlikely

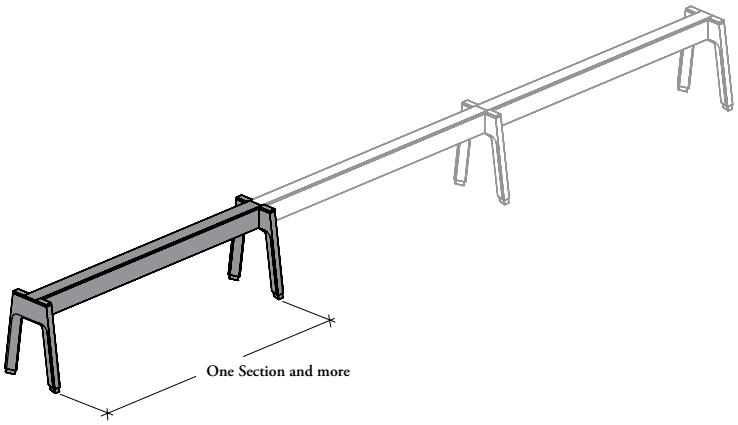

There is no limitation on the number of beams and span width for applications without beam-mounted screens

planning with low structural leg – fence (continued)

57" high Add-On Screens or 59" high Sit and Slide Screens are **not** allowed on all low fence workstations

linear station with screens – restrictions

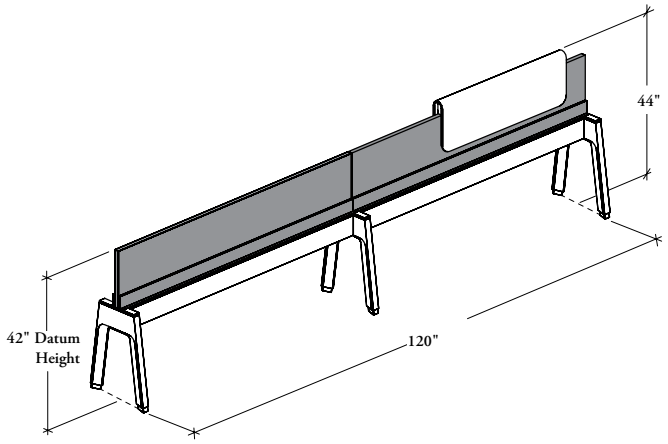

A minimum of two beams and a minimum span of 120" are required when 42" or 44" high screens are mounted on the beam

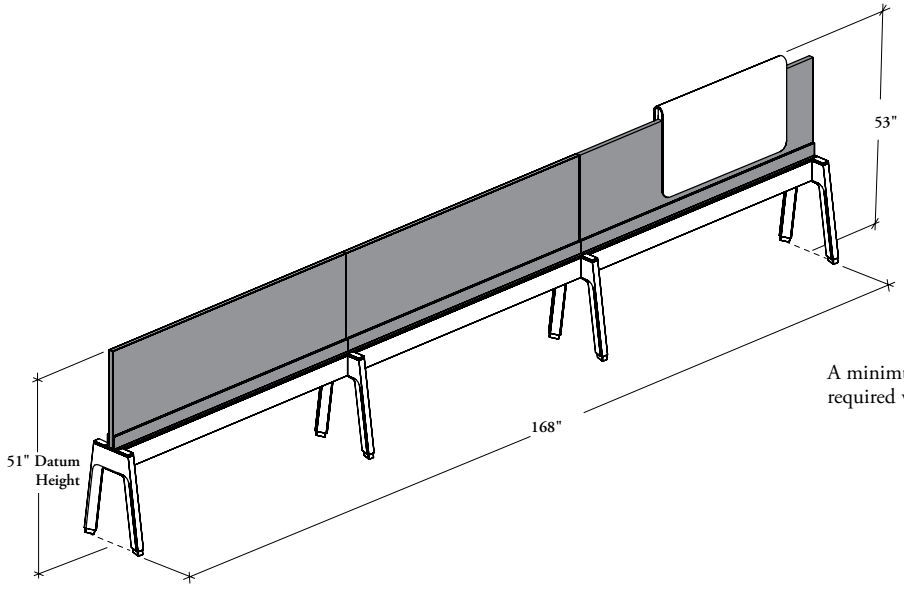

A minimum of three beams and a minimum span of 168" are required when 51" or 53" high screens are mounted on the beam

planning with low structural leg – fence (continued)

low fence structural leg supporting restrictions

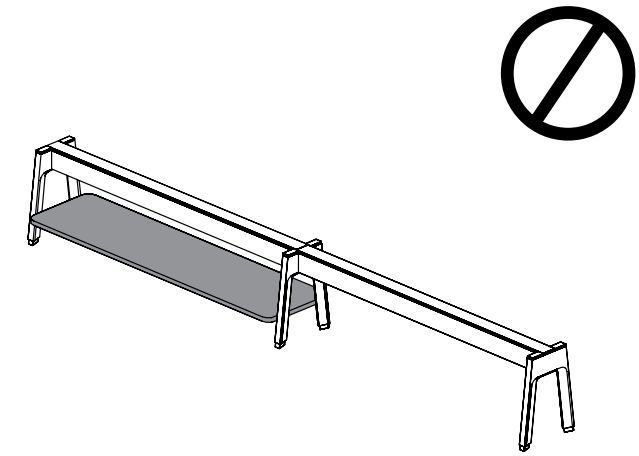

No Suspended Shelf (JNBSH) can be attached between two Low Structural Legs – Fence

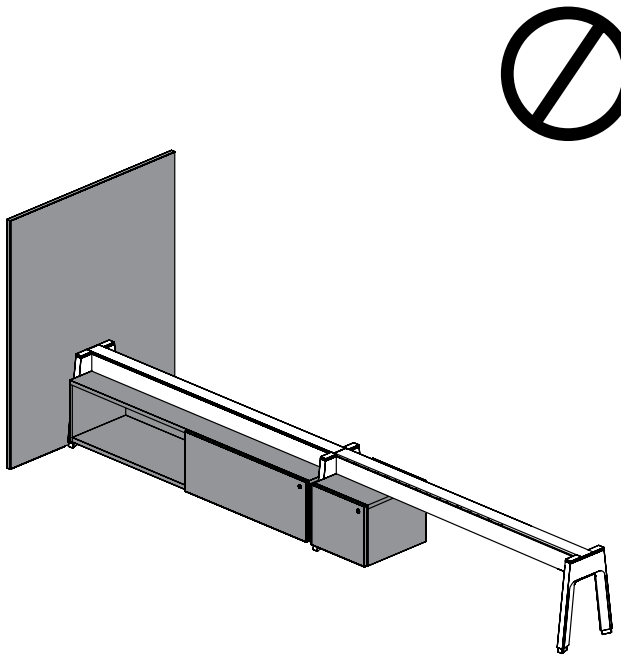

A Leg Mounted Elevated Screen, Floor Screen or Floor Screen with Metal Tower **cannot** be mounted on the side of the leg and a Suspended or Semi-Suspended Credenza, or a Suspended Pedestal/Cubby, **cannot** be attached to Structural Legs – Fence

understanding structural leg – fence

Structural Leg – Fence supports structural beams in a variety of planning for workstations and social spaces. Linear planning with no surfaces, lateral hang-on cabinets or beam accessories can be specified more cost efficiently using the EZ Fence Structure

Available in Double-Sided style only

Are installed at the end of one Double-Sided beam or between two contiguous Double-Sided Beams (JNDBB or JNDCB)

1. Screws and nuts are also included to secure the beam connection to the Structural Leg – Fence
2. Come with two Top Covers to hide the top of the leg for an aesthetic look
3. Come with Leveler Covers hiding the black levelers for a more refined aesthetic

Provides a leveling range of 3" (-3/16", +2 13/16")

structural leg – fence

4. Come with two angled vertical leg profiles on both sides

Two connections can be specified: End 5 or In-Line 6

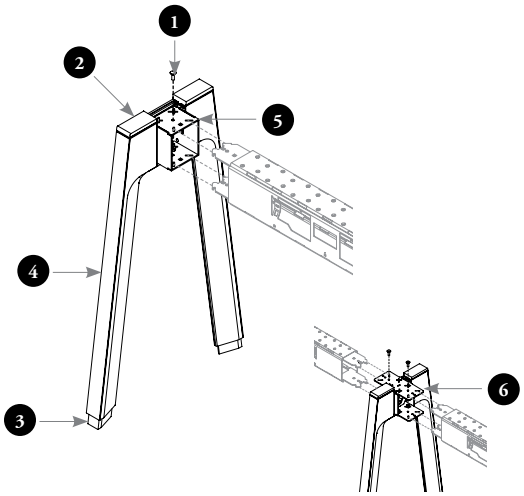

Two configurations are available:

end position

- Used in end of run only
- Used with Double-Sided Beams only

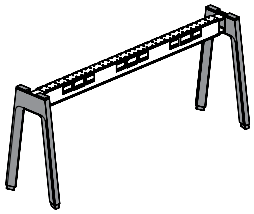

in-line position

- Used between two Structural Beams
- Used with Double-Sided Beams only

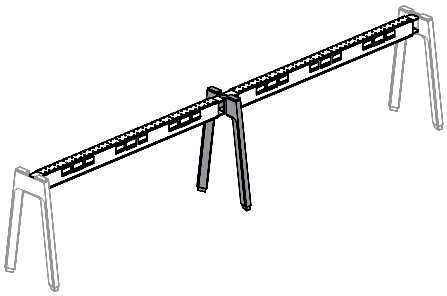

understanding structural leg – fence (continued)

Two Structural Leg – Fence styles are available:

End Structural Leg

In-Line Structural Leg

Top Cover Height

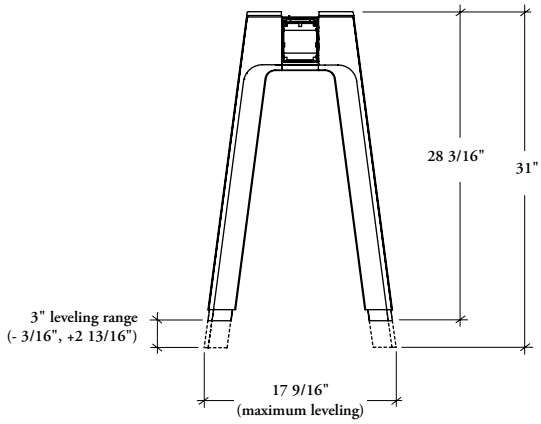

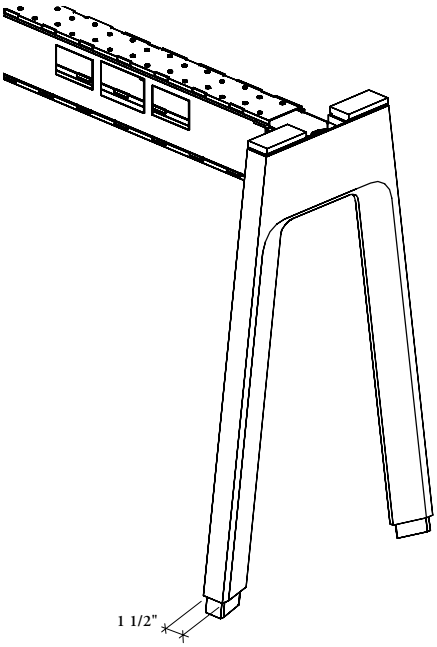

Slots on vertical parts

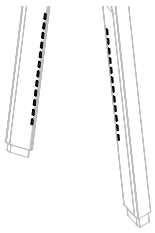

- The vertical parts come with integrated slots which can support the Suspended Shelf (JNBSH)
- **Not** allowed to insert a Table Attached Stabilizer for Structure (JNDST)

structural leg – fence basics

The following outlines the features of each of the Structural Leg – Fence available in Expansion Cityline.

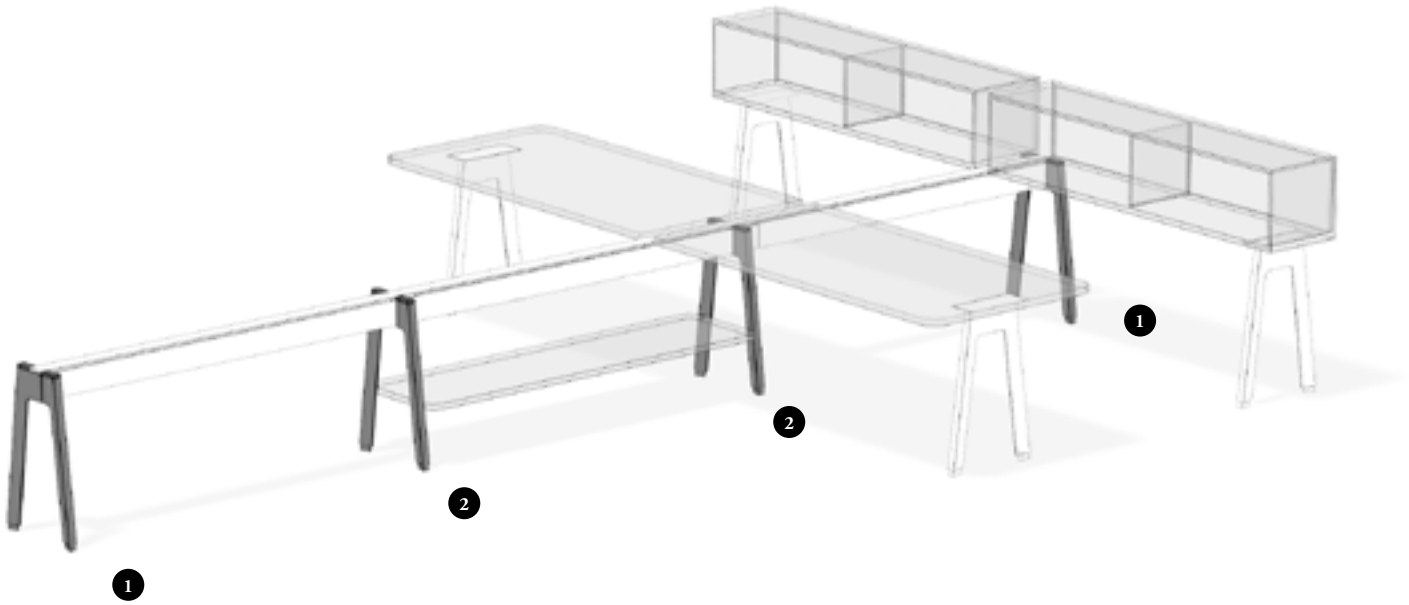

Structural Leg – Fence (JNDLF)

- Only available with Angled leg profiles
- Are available in end or in-line configurations
- Available in 18" depth
- Can only be used with Double-Sided Structural Beams (JNDBB) or Chicago Structural Beams (JNDCB)
- Top Covers are always included
- Height is 28 3/16" from the finished floor to the top of the Top Cover with a leveling range of 3"
- Comes with a Leveler Cover to hide the black leveler for aesthetic look. The Leveler Cover will match with the leg finish

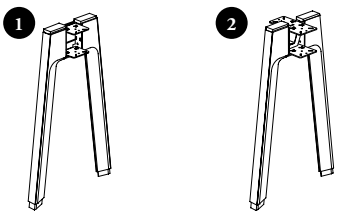

End (E) **In-Line (I)**

planning with structural leg – fence

The following should be considered when planning with Structural Leg – Fence.

- Can be used in linear, perpendicular and 120° social and collaborative spaces or for height-adjustable table workstations
- Structural Legs – Fence can be used to support exposed beams in such casual applications or height-adjustable table workstations
- Laminate or Writable Glass Peninsula Worksurfaces – Exposed Beam, High Peninsula Worksurfaces and Lateral Hang-On Cabinets are the only furniture components that can be mounted perpendicularly to beam
- Writable Glass Worksurface – Center Beam-Mounted, Suspended Shelf, Beam-Mounted Shelf, Add-On Beam-Mounted Screen, Elevated Beam-Mounted Screen and a variety of accessories can complement social and collaborative spaces

casual perpendicular station

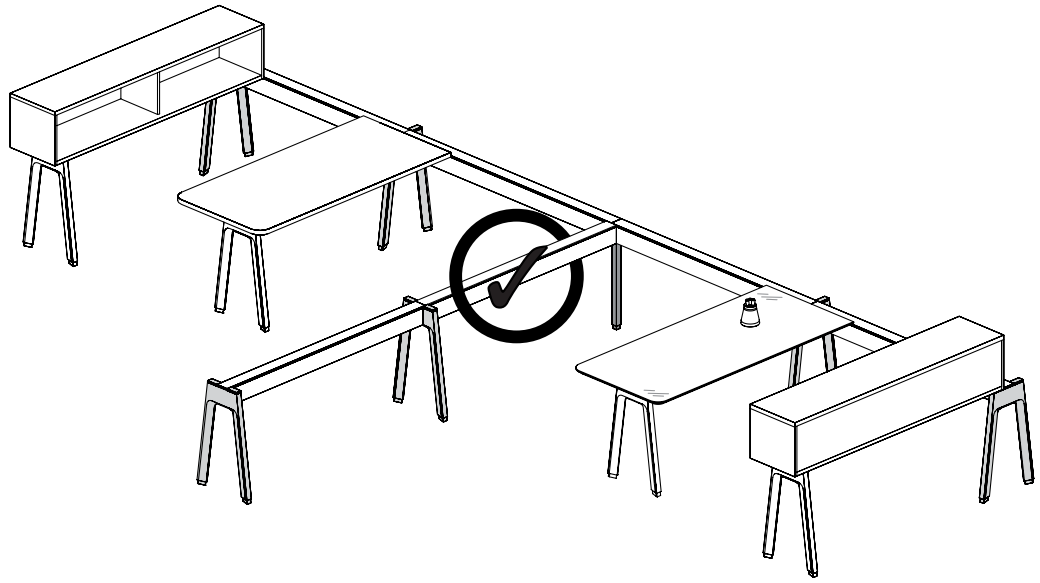

90° and 120° connections are allowed with exposed beams. The combination of Structural Legs – Fence with other supports (Structural Legs, Structural Posts and Structural Post with Front Leg) is allowed

casual station without screen – no restriction

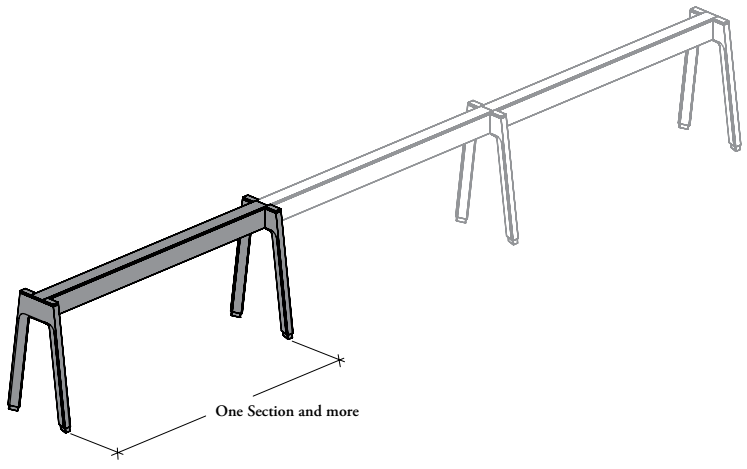

There is no limitation on the number of beams and span width for casual applications without beam-mounted screens

planning with structural leg – fence (continued)

57" high Add-On Screens or 59" high Sit and Slide Screens are **not** allowed on all casual workstations

casual station with screens – restrictions

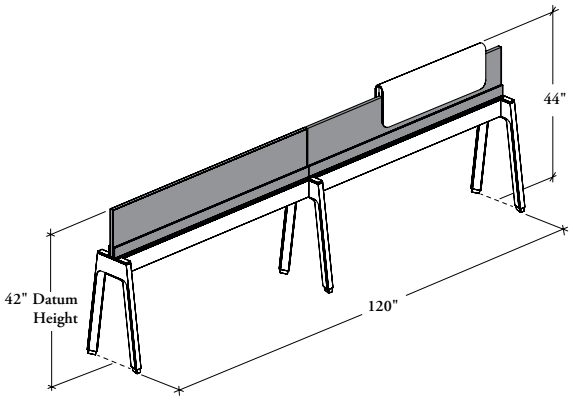

A minimum of two beams and a minimum span of 120" are required when 42" or 44" high screens are mounted on the beam

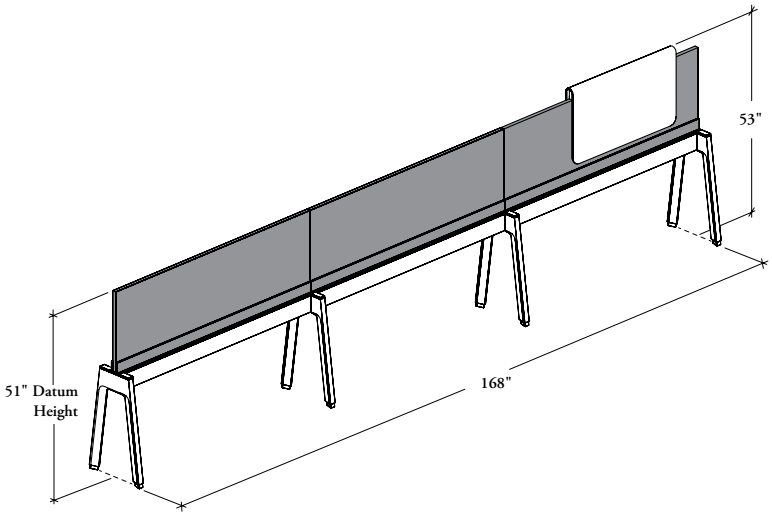

A minimum of three beams and a minimum span of 168" are required when 51" or 53" high screens are mounted on the beam

casual station with peninsula worksurface or lateral hang-on cabinet – no restriction

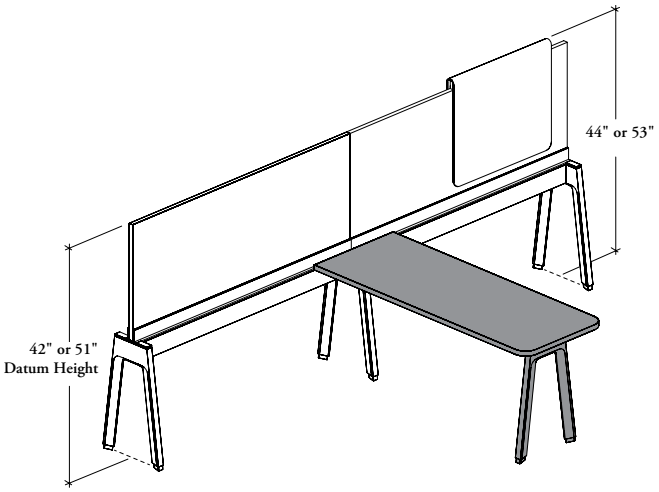

There is no limitation on the number of beams and span width for casual applications when 42", 44", 51" or 53" high screens are specified in conjunction with Pensinsulas or Lateral Hang-On Cabinets

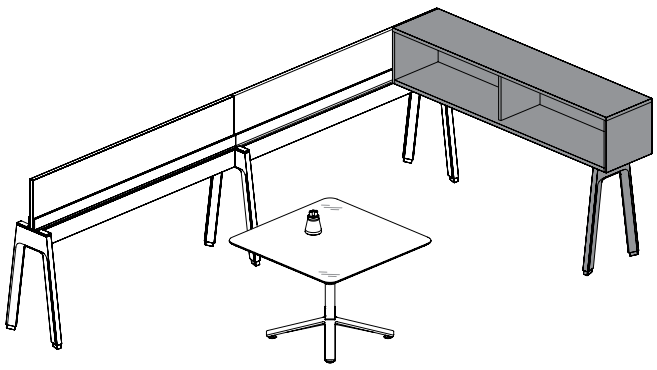

planning with structural leg – fence (continued)

fence structural leg supporting restrictions

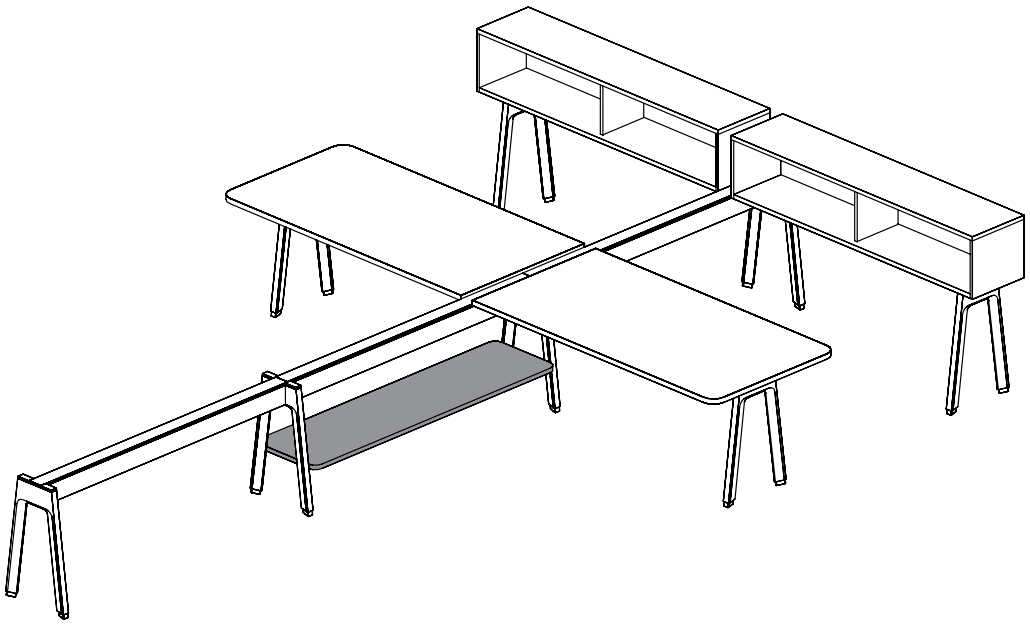

Only the Suspended Shelf (JNBSH) can be attached between two Structural Legs – Fence

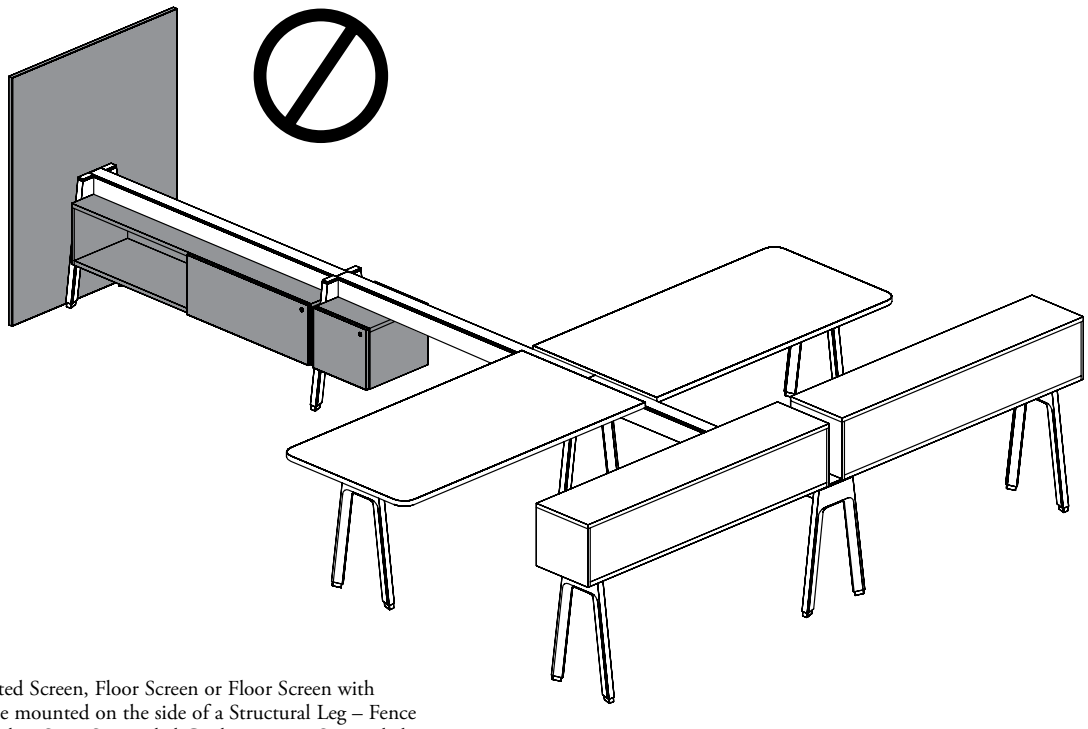

A Leg Mounted Elevated Screen, Floor Screen or Floor Screen with Metal Tower **cannot** be mounted on the side of a Structural Leg – Fence (JNDLF). A Suspended or Semi-Suspended Credenzas, or a Suspended Pedestal/Cubby, **cannot** be attached to Structural Legs – Fence (JNDLF)

understanding structural leg – beam-mounted cabinet

Structural Leg – Beam-Mounted Cabinet works in conjunction with a Single- or Double-Sided Beam to support a Beam-Mounted Cabinet used as a storage run-off.

The beam connector on leg can accept Single- or Double-Sided Beam (JNDBB or JNDCB) without being specified

Always positioned 6" recessed from the end of a Beam-Mounted Cabinet

1. Screws and nuts are also included to secure the beam connection to the Structural Leg – Beam-Mounted Cabinet
2. Comes with Leveler Covers hiding the black levelers for a more refined aesthetic

Provides a leveling range of 3" (-3/16", +2 13/16")

structural leg – beam-mounted cabinet

3. Comes with two angled vertical leg profiles on both sides
4. Universal connection can accept single- or double-sided (Shown) beam
5. Comes with a mounting plate to attach the cabinet

The Top Covers **cannot** be installed on this leg

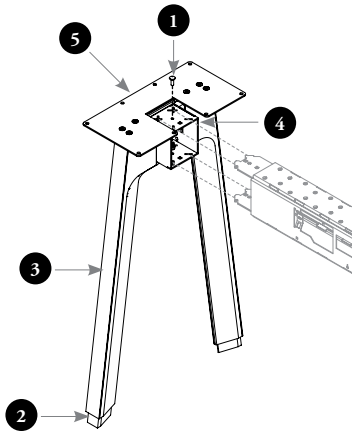

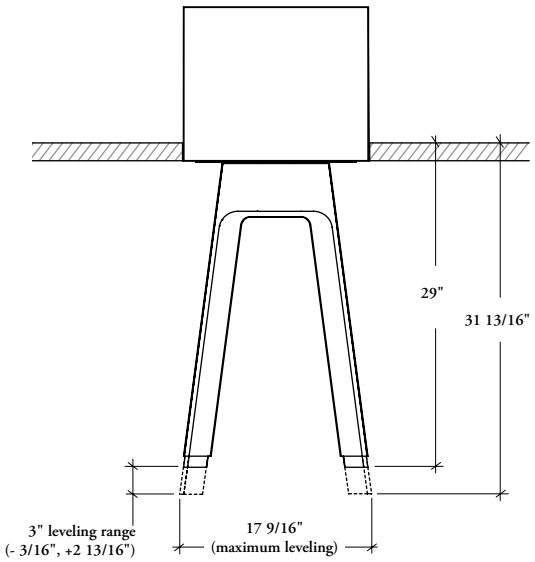

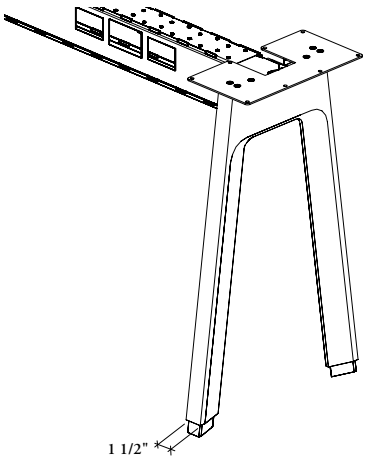

end position

Combination with a Single-Sided Beam and a 15" deep Single-Sided Beam-Mounted Cabinet

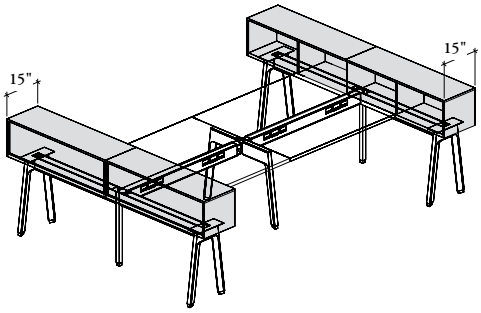

in-line position

Combination with a Double-Sided Beam and a 18" deep Shared Beam-Mounted Cabinet

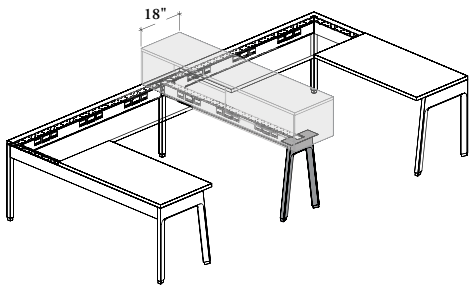

understanding structural leg – beam-mounted cabinet (continued)

- Can be used in perpendicular applications only
- Single-Sided and Shared Beam-Mounted Cabinets are both supported by Structural Legs – Beam-Mounted Cabinet; the single-sided cabinet positioning will have an impact on the workstation footprint

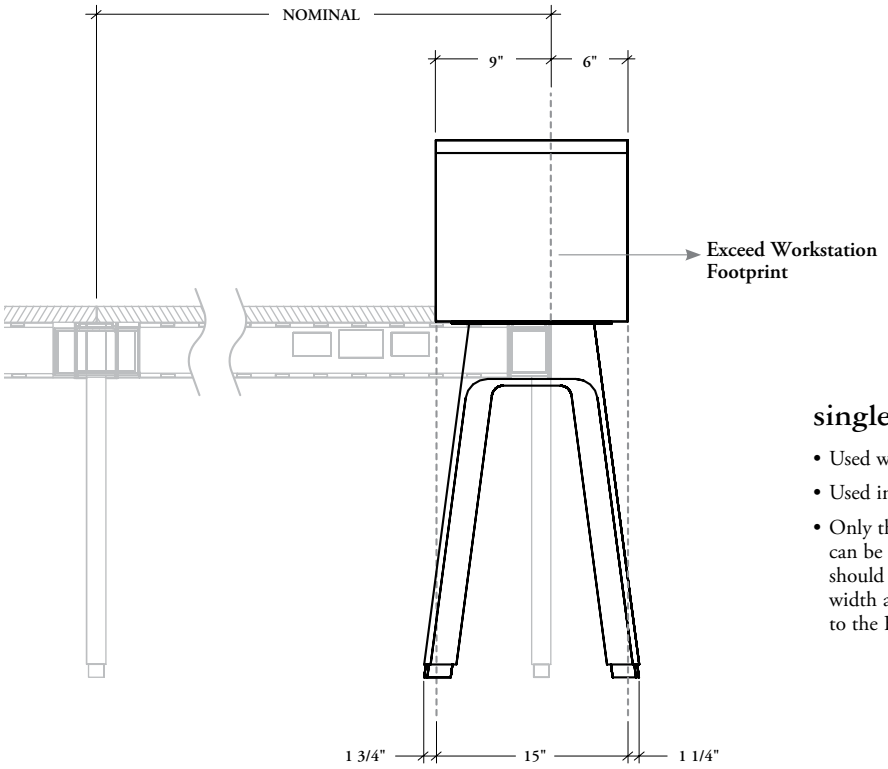

single-sided application

- Used with single-sided beam
- Used in middle or end (Shown) of workstation
- Only the 15" deep single-sided Beam-Mounted Cabinet can be specified for end of run. A special attention should be paid when specifying the perpendicular beam width and the connecting worksurface. For details, refer to the Beam-Mounted Storage section

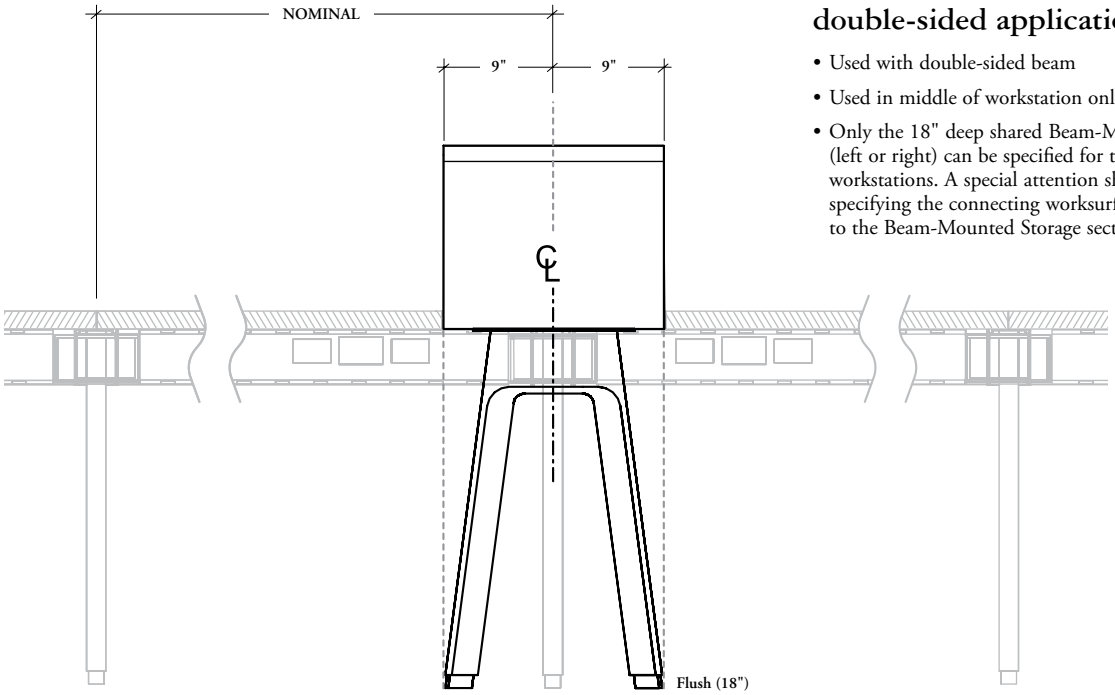

double-sided application

- Used with double-sided beam
- Used in middle of workstation only
- Only the 18" deep shared Beam-Mounted Cabinet (left or right) can be specified for the middle of workstations. A special attention should be paid when specifying the connecting worksurface. For details, refer to the Beam-Mounted Storage section

understanding structural leg – peninsula

Structural Leg – Peninsula works in conjunction with a Double-Sided Beam to support a Peninsula Worksurface.

The beam connector on leg can accept Double-Sided Beam (JNDBB or JNDCB) only

Can be positioned 6", 12" or 18" recessed from the end of a Peninsula Worksurface

1. Screws and nuts are also included to secure the beam connection to the Structural Leg – Peninsula
2. Comes with Leveler Covers hiding the black levelers for a more refined aesthetic

Provides a leveling range of 3" (-3/16", +2 13/16")

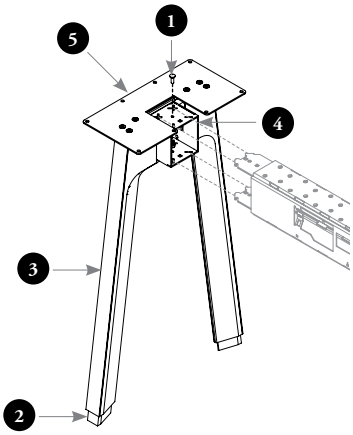

structural leg – peninsula

3. Comes with two angled vertical leg profiles on both sides
4. Only double-sided beam can be used
5. Comes with a mounting plate to attach the peninsula

The Top Covers **cannot** be installed on this leg

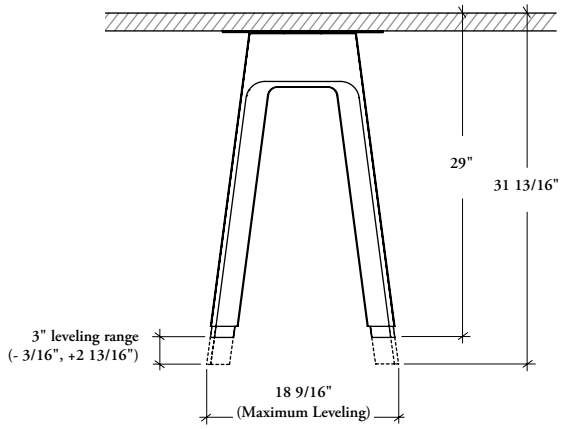

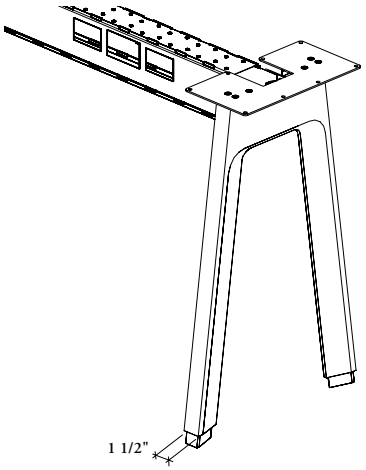

in-line position only

Combination with a Double-Sided Beam and a Peninsula Worksurface

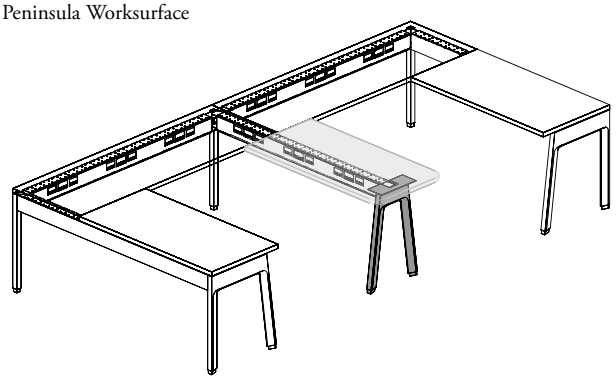

structural leg – beam-mounted cabinet & peninsula basics

The following outlines the features of each of the Structural Leg – Beam-Mounted Cabinet and Structural Leg – Peninsula available in Expansion Cityline.

- Only available with Angled leg profiles
- Available in 18" depth
- Height is 29" from the finished floor to the top of the finished worksurface with a leveling range of 3"
- Comes with a Leveler Cover to hide the black leveler for aesthetic look. The Leveler Cover will match with the leg finish

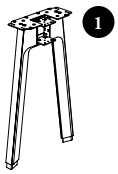

Structural Leg – Beam-Mounted Cabinet (JNDLL)

- Supports the end of Structural Beam to maintain stability
- Can be used with Single- or Double-Sided Structural Beams (JNDBB) or Chicago Structural Beams (JNDCB)

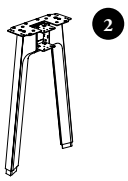

Structural Leg – Peninsula (JNDLP)

- Supports the end of Structural Beams to maintain stability
- Can be used with Double-Sided Structural Beams (JNDBB) or Chicago Structural Beams (JNDCB) only

planning with structural leg – beam-mounted cabinet

The following should be considered when planning with Structural Leg – Beam-Mounted Cabinet.

- Can be used in perpendicular planning only. (End or In-Line Structural Post + Single- or Double-Sided Beam + Structural Leg – Beam-Mounted Cabinet)
- The structural beam is mandatory for this application
- Structural Leg – Beam-Mounted Cabinet **cannot** be replaced by a Freestanding Leg – Lateral Cabinet (JNALL) or any other leg style for supporting a Beam-Mounted Cabinet
- Only the Beam-Mounted Cabinets – Open (JNBBLO) can be used with this leg

restrictions

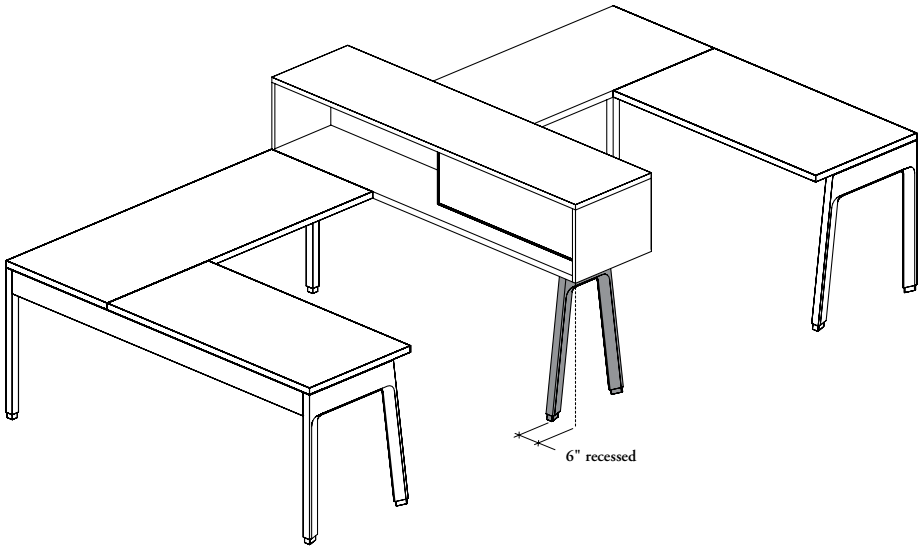

The leg is positioned 6" recessed from the end of a Beam-Mounted Cabinet.
The structural beam must be specified 6" shorter than the cabinet

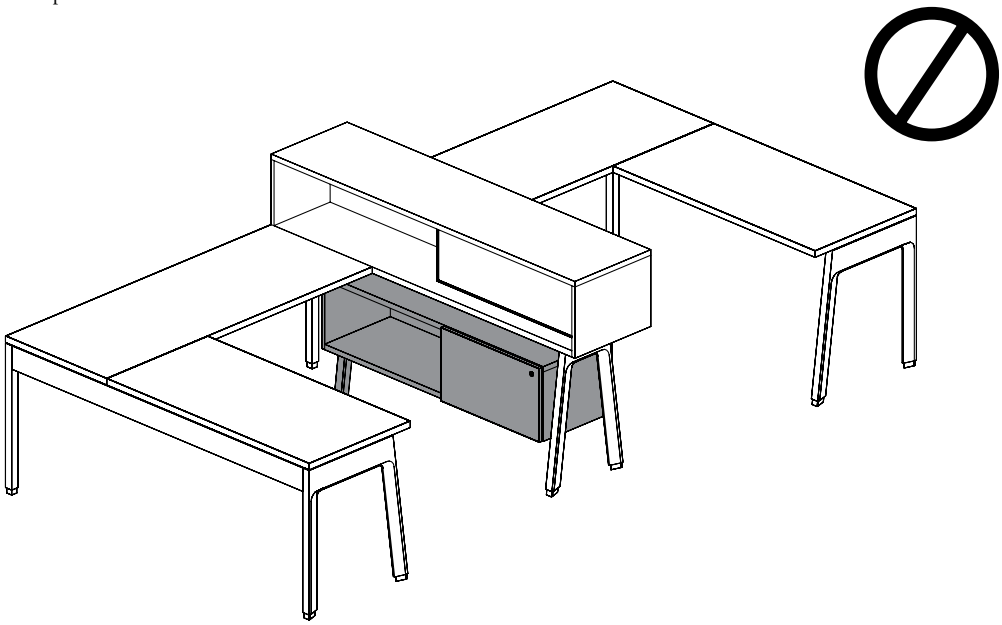

This leg **cannot** support Suspended Pedestal/Cubby, Semi-Suspended Credenza or Suspended Shelf

planning with structural leg – peninsula

The following should be considered when planning with Structural Leg – Peninsula.

- Specify structural beam minus desired leg recess
- Three recess applications are allowed:

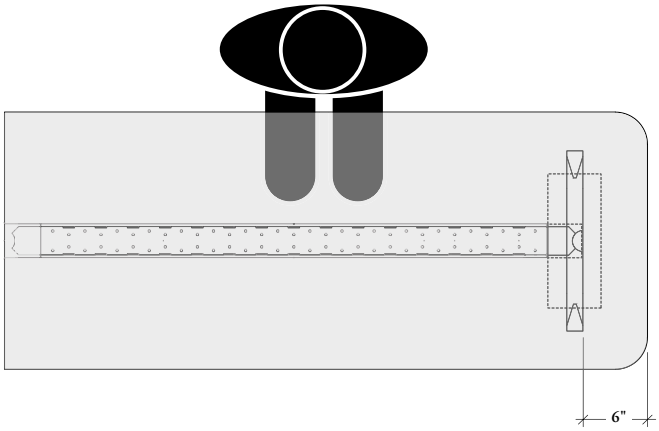

6" recessed

- Optimizes user space
- Aligns with Beam-Mounted Cabinet

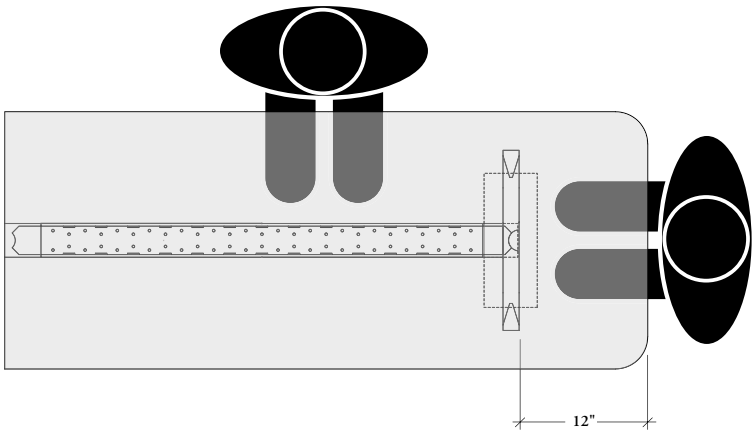

12" recessed

- Optimizes both user and visitor spaces
- Virtually centers the leg on 24" deep Peninsula Worksurface

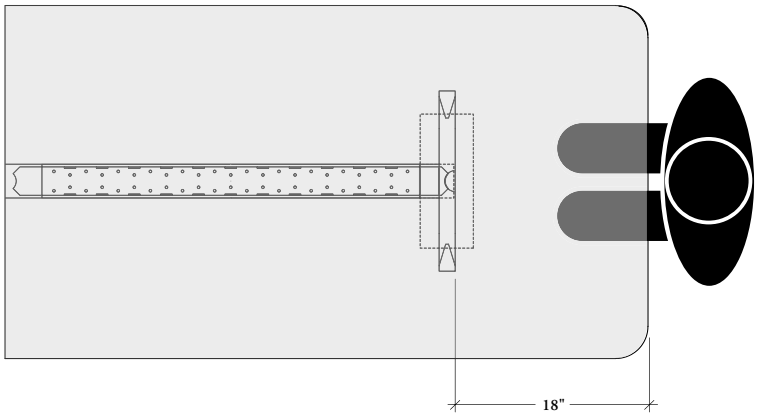

18" recessed

- Optimizes visitor space
- Virtually centers the leg on 36" deep Peninsula Worksurface

planning with structural leg – peninsula (continued)

- Can be used in perpendicular planning only. (In-Line Structural Post + Double-Sided Beam + Structural Leg – Peninsula)
- Only the Peninsula Worksurfaces (JNWPSN, JNWPSE, JNWPCN, JNWPCE, JNWPGN, JNWPGE) can be used with this leg
- Peninsula worksurfaces can also be supported by a Freestanding Leg Peninsula (JNALP) or a Peninsula Monopod Base – Round (JNAPP). However, the beam and post will have to be replaced by a Structural Leg positioned on the main spine. For more details, refer to the Worksurfaces & Desk Accessories sections

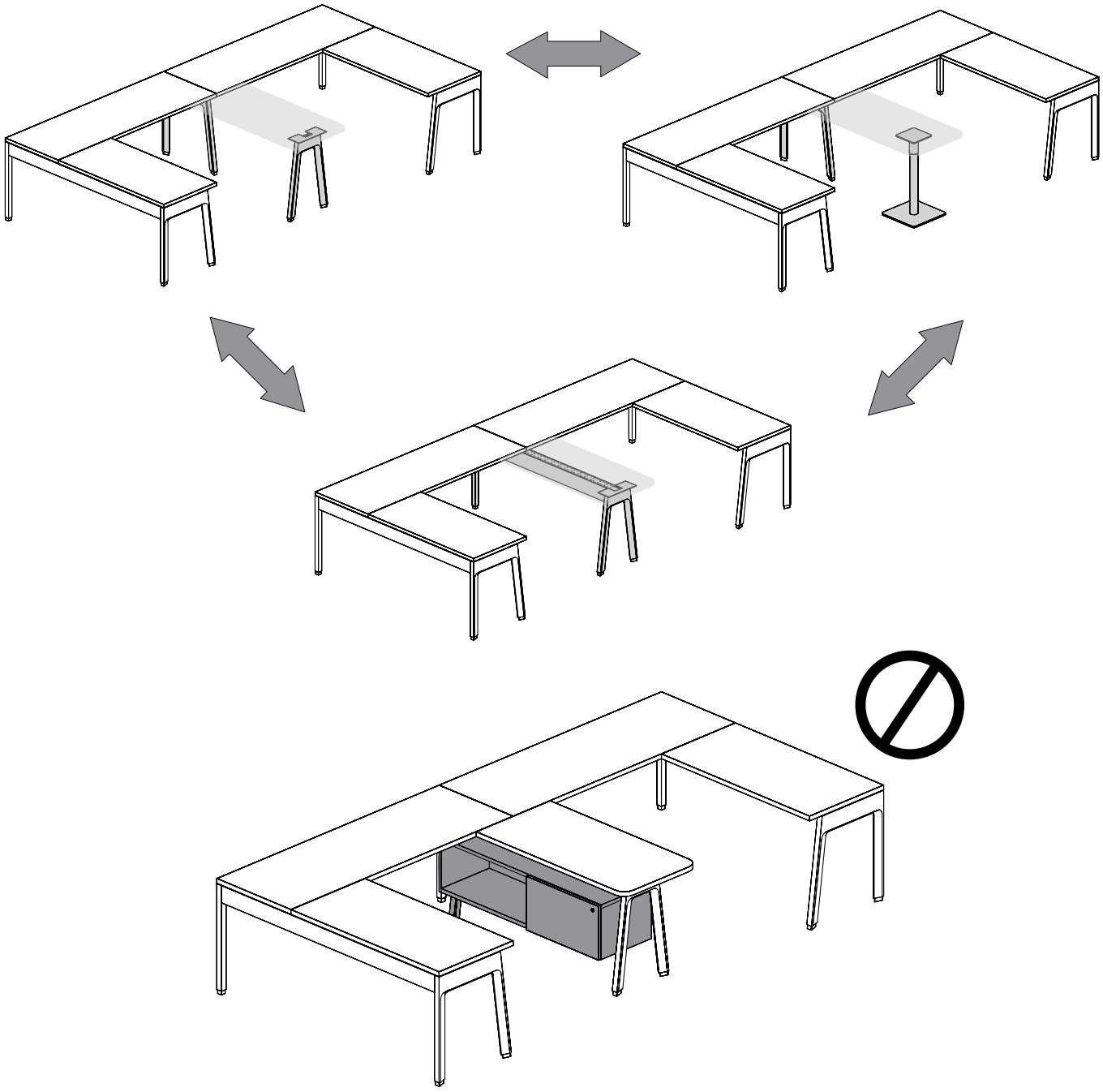

This leg **cannot** support Suspended Pedestal/Cubby, Semi-Suspended Credenza or Suspended Shelf

understanding structural beam covers

The covers are available to conceal the exposed top, sides and bottom of a structural beam.

- The covers can be used with Single- or Double-Sided Beams (JNDBB or JNDCB)
- Structural Covers – Top and Side are specified to finish the exposed beam surfaces for aesthetic look
- Structural Cover – Side can also be installed underneath a worksurface
- Bottom Wire Cover for Structural Beam – Standard is specified to hide and prevent people from reaching wires inside the beam
- Can be used in combination with worksurfaces, screens, beam-mounted cabinets and credenzas
- Three Structural Beam Cover styles are available and can be specified separately:

side

- Structural Beam Cover – Side is used to conceal the front and/or back surface of a beam
- Can be specified to allow access to the power and data. Three options are available:

  – Power and Data (D)
  – Power Only (P)
  – No Opening (N)

  Cut-out dimensions on cover are fit with Power Outlets and Data Extender Plate; cut-out positons are offered to align with Power and Data positions on beam
- Must be specified when a beam is exposed

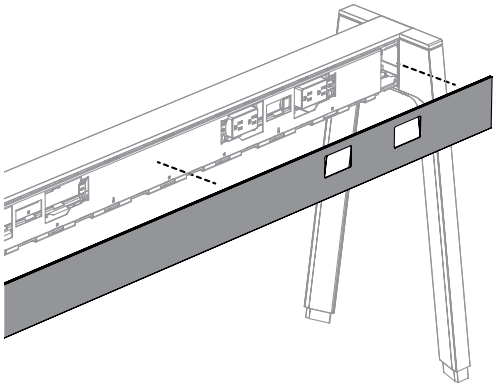

top

- Structural Beam Cover – Top is used to conceal the top surface of a beam
- Can be specified with finished end cap for aesthetic look when the end of the cover is exposed. Three finished end options are available:

  – Two End Caps (T)
  – One End Cap (O)
  – No End Caps (N)
- Must be specified when a beam is exposed

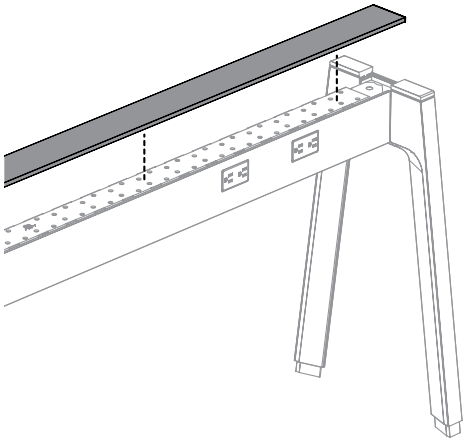

bottom

- Bottom Wire Cover for Structural Beam – Standard is used to conceal the bottom and interior of a beam
- This cover can be used to hide and route cables, it will prevent people from reaching wires inside the beam
- It is **not** mandatory when a beam is exposed, but is recommended in casual applications with Structural Leg – Fence. For more details, refer on page 276
- **Cannot** be used along with a Bottom Kit for Structural Beam – Reinforced

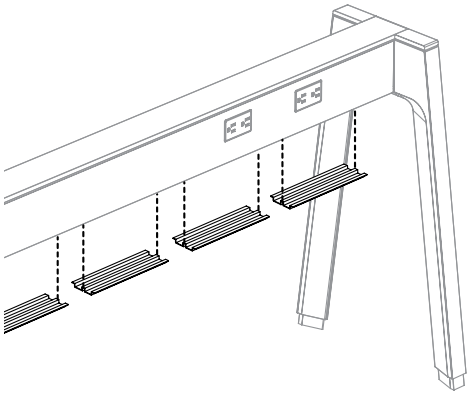

structural beam cover basics

The following outlines the features of each of the Structural Beam Covers available in Expansion Cityline.

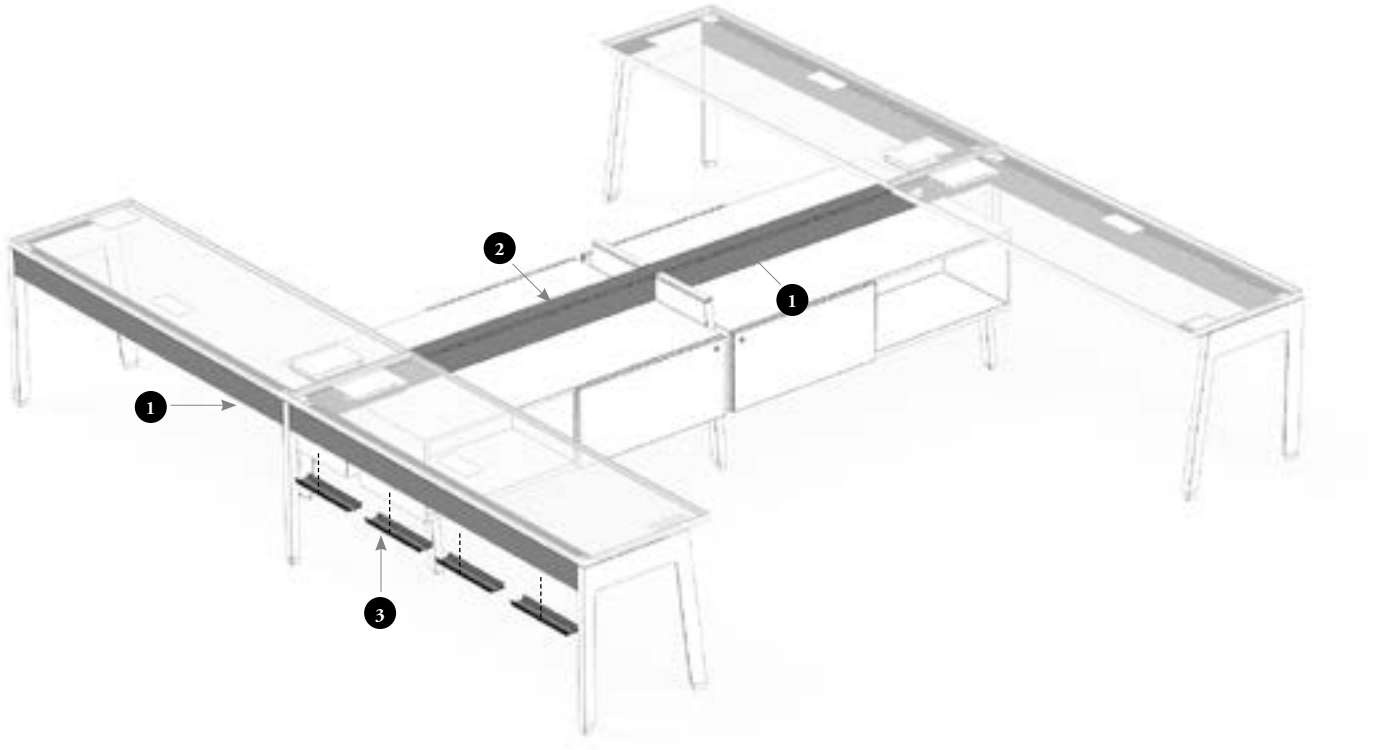

Structural Beam Cover – Side (JNDBCS)

- Are available with Power and Data (D), Power Only (P) or No Opening (N) cut-outs
- Available in widths 24" to 84" (6" increments)
- Understanding Width Reduction is key in specifying the appropriate cover, refer to page 295 of the application guideline for more details
- Can be used with a Single- or Double-Sided Structural Beams (JNDBB) or Chicago Structural Beams (JNDCB)
- Four opening positions are available: Both Ends (B), Center (C), Left (L) or Right (R)

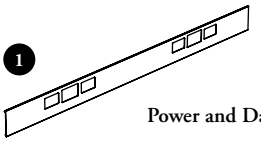

Power and Data (D)

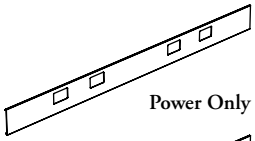

Power Only (P)

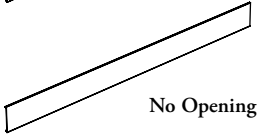

No Opening (N)

Structural Beam Cover – Top (JNDBTC)

- Available in widths 24" to 84" (3" increments)
- Understanding Width Reduction is key in specifying the appropriate cover, refer to page 303 of the application guideline for more details
- Can be used with a Single- or Double-Sided Structural Beams (JNDBB) or Chicago Structural Beams (JNDCB)
- Three finished end options are available:
  - Two End Caps (T)
  - One End Cap (O)
  - No End Caps (N)

Bottom Wire Cover for Structural Beam – Standard (JNDBCB) EZ compatible

- Available in beam widths 24" to 84" (6" increments)
- Can be used with a Single- or Double-Sided Structural Beams (JNDBB) or Chicago Structural Beams (JNDCB)

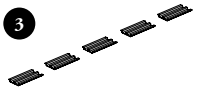

bottom kit for structural beam basics

The Bottom Kit is available to provide more strength or compatibility to a Structural Beam.

- Available in widths 24" to 84" (6" increments)
- Can be used with a Single- or Double-Sided Structural Beams (JNDBB) or Chicago Structural Beams (JNDCB)
- Allows mounting Elevated Screens, Floor Screens, Suspended Credenzas or Semi-Suspended Credenzas
- Two Beam Configurations are available:

reinforced (R)

- **Not** included with Structural Beam and can be specified separately (JNDBK_R)
- It is used to add rigidity to the beam, when a Single-Sided Structural Leg – End Configuration or a Double-Sided Structural Leg – End Configuration is exposed. It keeps the leg square to the beam
- Handedness is determined on-site
- Allows access to facing down power and data.
- Include cut-outs for insertion of Wrap Around Cable Manager (JNEWAC_B), Communication Extender Plate (JNEDE) and data faceplates

  The opening positions offering varies dependently with cover width, refer to specification software for details

  Comes with one power cut-out set (48" to 60" widths) or two power cut-out sets (66" to 84" widths). Each power cut-out set comes with two openings for duplex

Finish: Ebony (52)

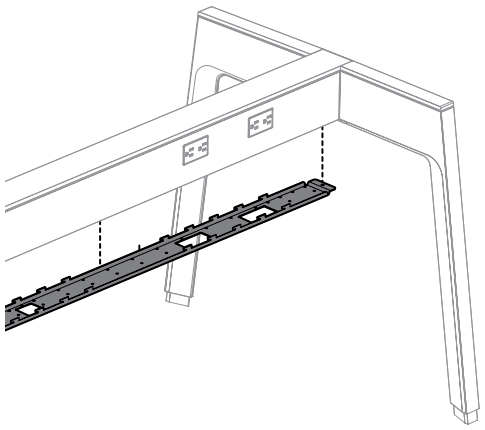

standard (S)

- Are used for reconfiguration only.
- Standard Facing Down Brackets are included and installed under the Structural Beam to retain cables
- Can also be specified separately (JNDBK_S)

Finish: Ebony (52)

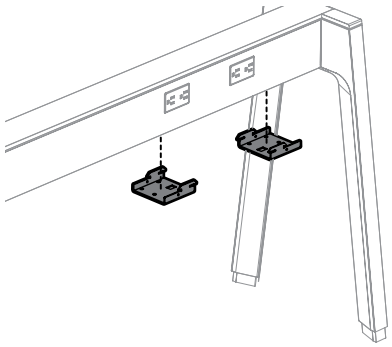

planning with bottom kit for structural beam

The following should be considered when planning with Expansion Cityline Bottom Kit for Structural Beam.

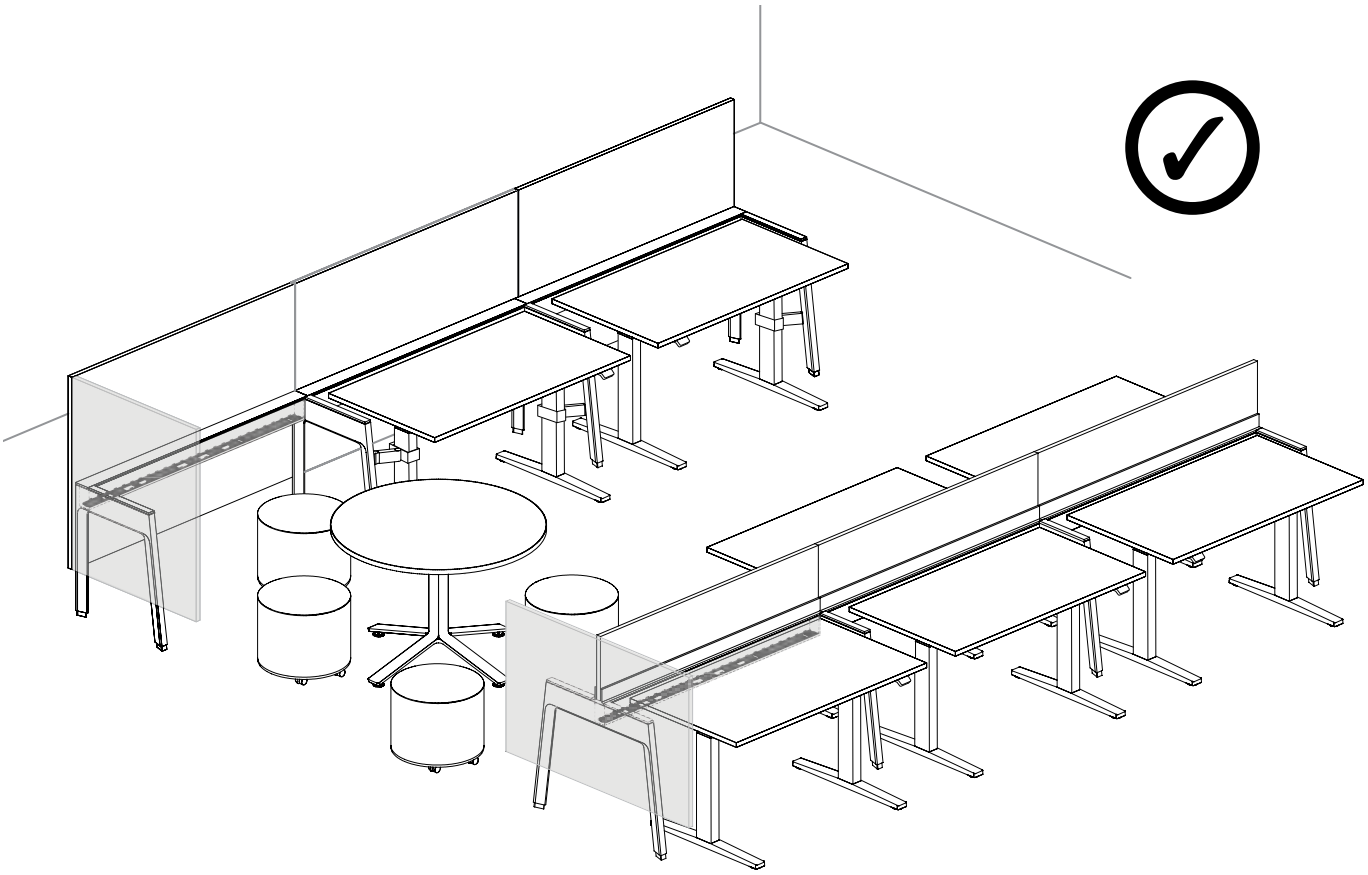

Bottom Kit for Structural Beam

A Reinforced Bottom Kit for Structural Beam is needed when and exposed End Structural Leg is **not** squared by one of these product:

– Suspended or Semi-Suspended Credenza
– Table Attached Stabilizer for Structure
– Wall Anchored Stabilizer for Structure

planning with structural beam cover – side

The following should be considered when planning with Expansion Cityline Structural Beam Cover – Side.

electrical/communication outlet locations

- Structural Beam Covers are available with Power and Data Openings. Each power cut-out comes with two openings for two duplex. Each data cut-out comes with one opening for one Data Extender Plate
- The opening position offering varies dependently with cover width. The chart below outlines the possible locations
- Cut-outs are available centered, left, right, or on both ends of the beam cover in order to align with mounting positions of power and data on beams

no opening (N)

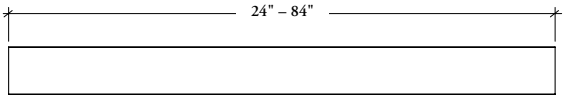

No Opening Position

power only (P)

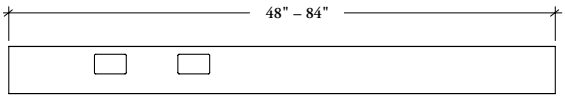

Left Opening Position (L)

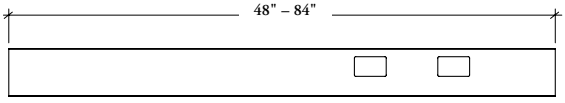

Right Opening Position (R)

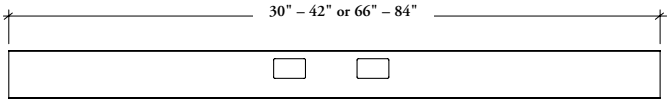

Center Opening Position (C)

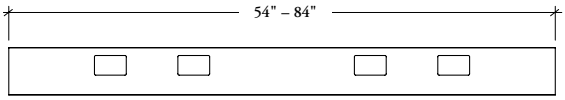

Left & Right
Both Ends Opening Position (B)

power & data (D)

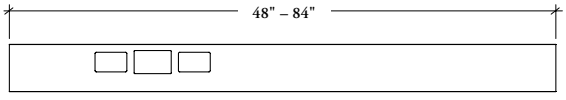

Left Opening Position (L)

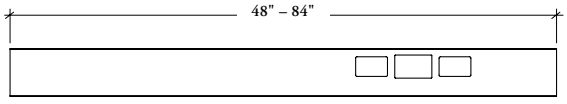

Right Opening Position (R)

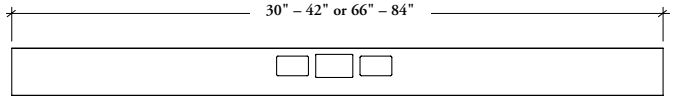

Center Opening Position (C)

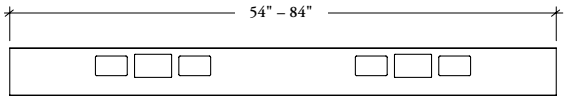

Left & Right
Both Ends Opening Position (B)

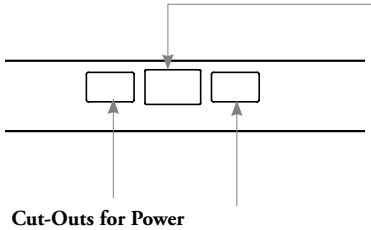

Cut-Outs for Power

- These cut-outs provide access to the Receptacle Outlets (JNEPRO)
- Also used with receptacle outlets included with Chicago Power Box (JNECPB)

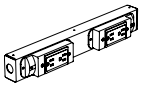

Cut-Out for Data

- The Communication Extender Plate (JNEDE) are mandatory and must be specified separately when side covers are used
- The data faceplates will mount onto the Communication Extender Plate
- Communication openings on cover are designed to fit with the Communication Extender Plate only

planning with structural beam cover – side (continued)

- Can be used in combination with all structural supports, worksurfaces, screens, beam-mounted cabinet or credenzas
- Side covers should be used on-module only

off-modularity – restriction

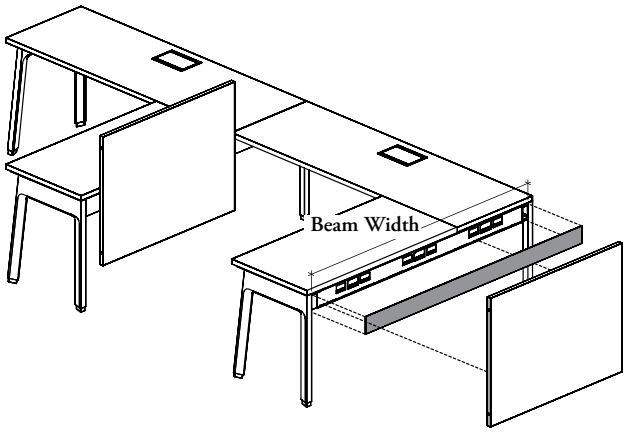

- Side covers must be specified the same dimension than the structural beam on which it is installed
- Side covers can be installed in combination with off-module Elevated or Floor Screens with Beam-Mounted option only

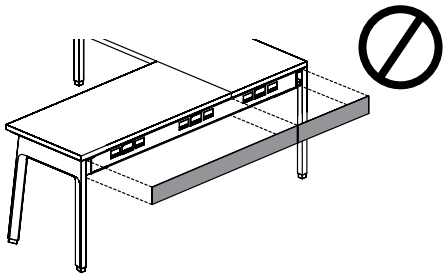

Never attempt to use two contiguous side covers on the same beam

with suspended, or semi-suspended credenzas – no restriction

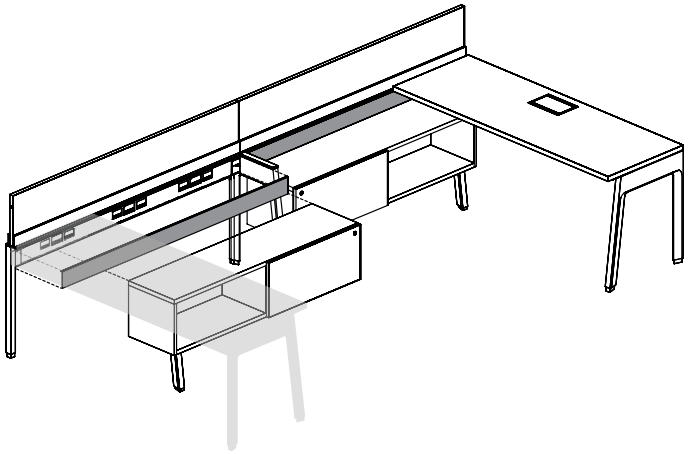

- Side Structural Beam Cover can be installed in combination with a Suspended or Semi-Suspended Credenzas and is mandatory when the beam is exposed
- The credenzas position although very close still allows to mount Side Structural Beam Cover

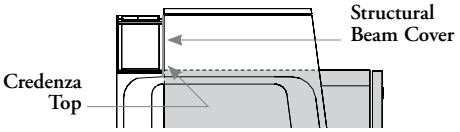

planning with width reduction for structural beam cover – side

- Because Structural Beams, Posts and Legs are enclosed inside the footprint of workstations, the width of side covers has to be reduced dependently with the overlap of each of these elements inside the nominal width specified
- Width Reduction must be specified independantly for both sides of cover. Following illustrations show how to specify this option in all situations
- Six options are available for each side of the cover:

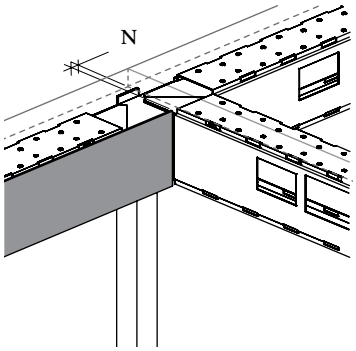

None (N)

When perpendicular Single-Sided Beam is fully enclosed inside next station, the width of the cover does not have to be reduced at this end, the **None** (**N**) option must be specified

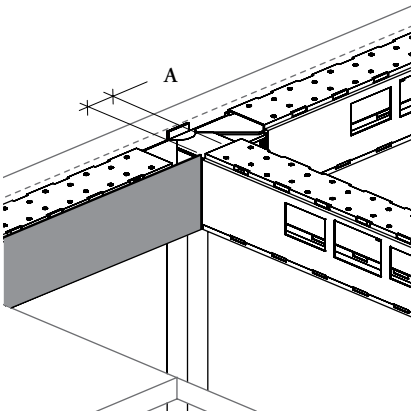

Beam – Half (A)

When perpendicular Double-Sided Beam is shared with next station, the width of the cover has to be reduced by half of the beam depth, the **Beam – Half** (**A**) option must be specified

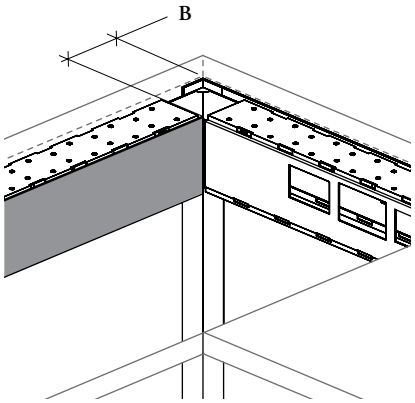

Beam – Full (B)

When perpendicular Single-Sided Beam is fully enclosed inside specified station, the width of the cover has to be reduced by the beam full depth, the **Beam – Full** (**B**) option must be specified

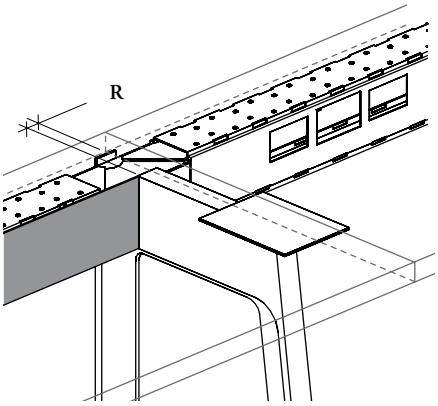

Support – Half (R)

When support is shared with next station, the width of the cover has to be reduced by half of the support width, the **Support – Half** (**R**) option must be specified

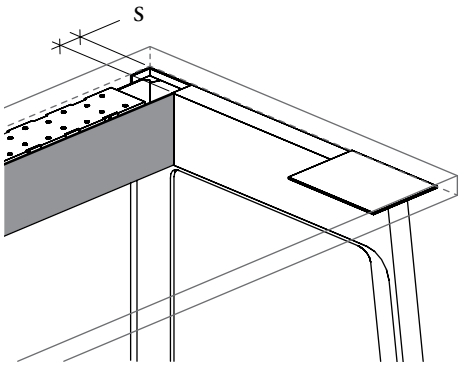

Support – Full (S)

When support is fully enclosed inside specified station, the width of the cover has to be reduced by the full support width, the **Support – Full** (**S**) option must be specified

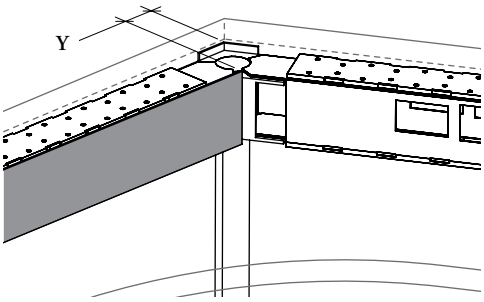

Post – 120° (Y)

- When Double-Sided Beams are used to create a 120° workstation, the width of the cover has to be reduced accordingly, the **Post – 120°** (**Y**) option must be specified
- **Cannot** be specified on both sides of a Structural Beam Cover – Side

planning with width reduction for structural beam cover – side (continued)

- Specifying the appropriate side cover is done by selecting the same width than the beam on which it is installed and applying a width reduction for the overlapping structure at each end
- The left and right sides of cover are determined when facing the exposed face of the cover
- The width reduction is the same for the external side of a post, the internal side of a leg and the external side of a leg. Single- and Double-Sided Legs are of the same width
- The fit with Beam-Through Towers – End Position is **not** guaranteed

workstation	inside view	outside view
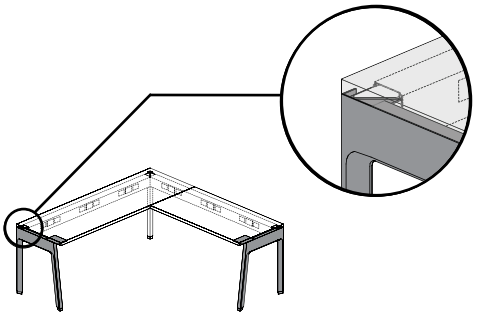	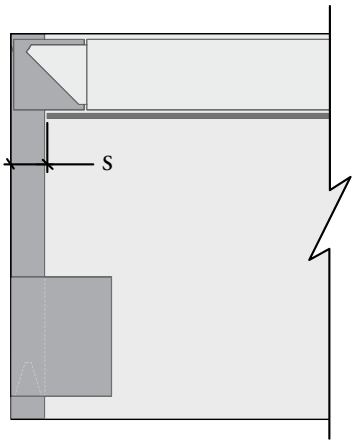	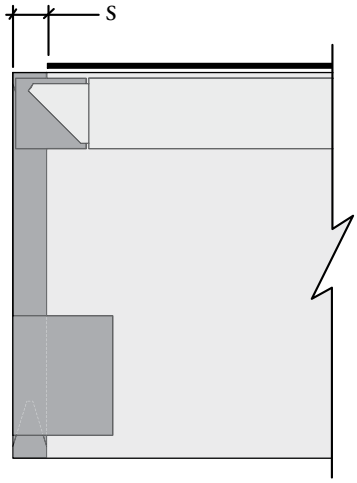
Side Beam Cover Application with support – End Position	1x Beam Length minus **Support – Full (S)**	1x Beam Length minus **Support – Full (S)**

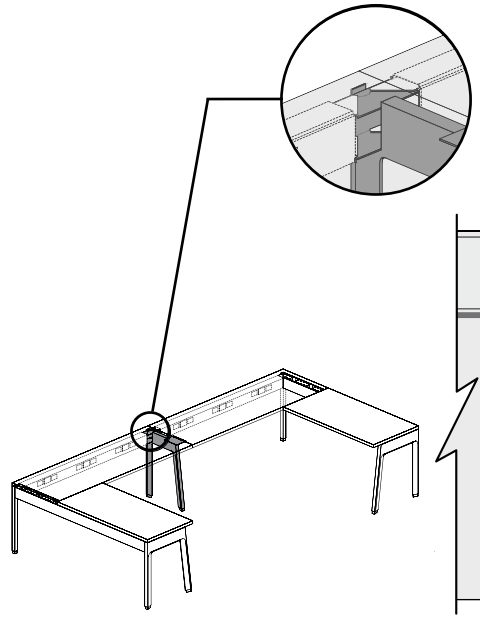

Side Beam Cover Application with support – In-Line Position

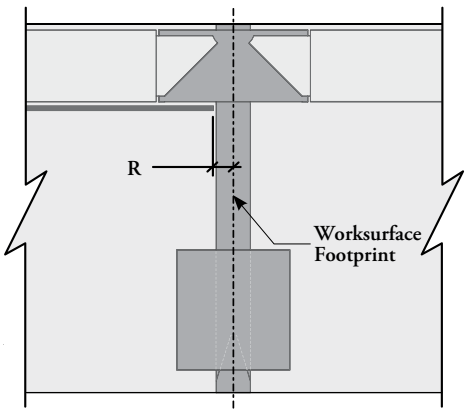

1x Beam Length minus **Support – Half (R)**

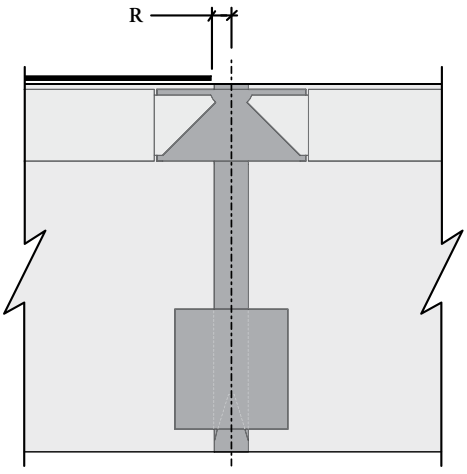

1x Beam Length minus **Support – Half (R)**

planning with width reduction for structural beam cover – side (continued)

workstation

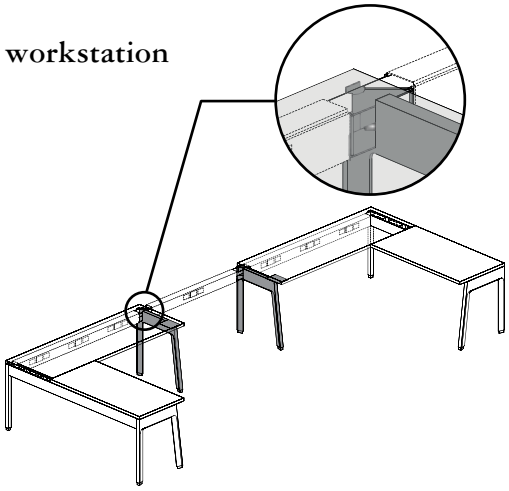

Side Beam Cover Application with In-Line Structural Leg – Shifted Position

inside view

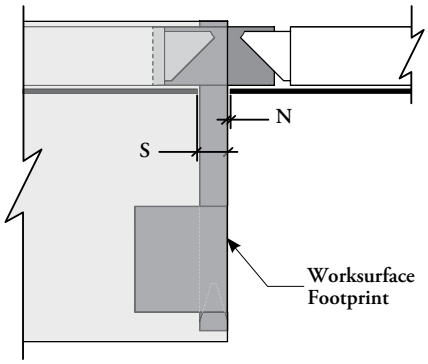

- 1x Beam Length minus **Support – Full (S)**
- 1x **None** Width Reduction **(N)**

outside view

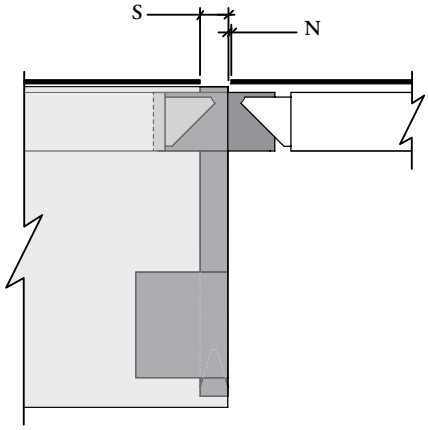

- 1x Beam Length minus **Support – Full (S)**
- 1x **None** Width Reduction **(N)**

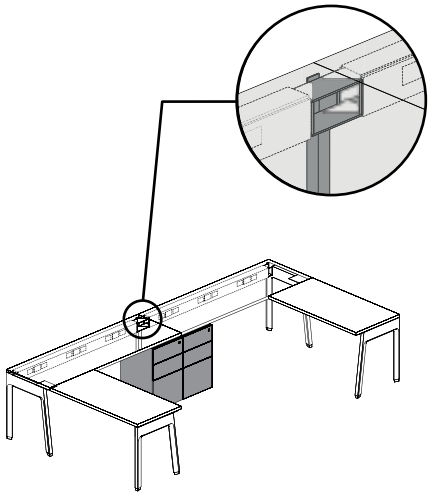

Side Beam Cover Application with 28" high Freestanding Storage – Centered Position

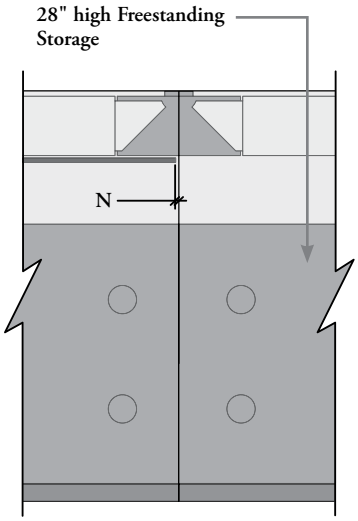

1x **None** Width Reduction **(N)**

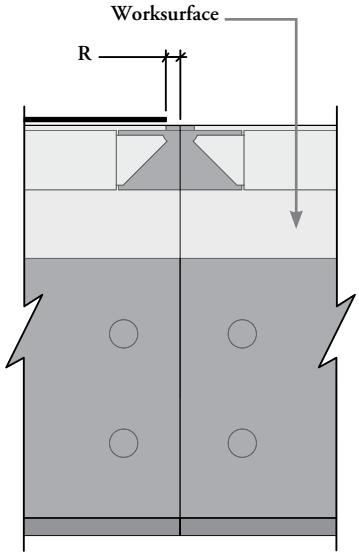

1x Beam Length minus **Support – Half (R)**

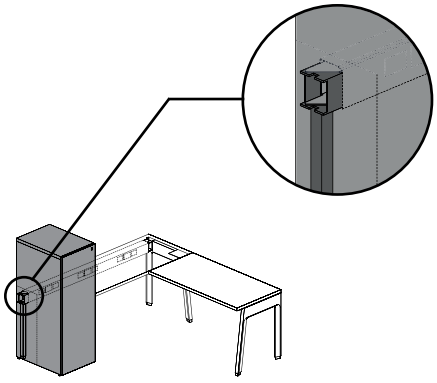

Side Beam Cover Application with Beam Tower – End Position

Not recommended on external side: there will be a 1/2" gap between the end of the cover and the side

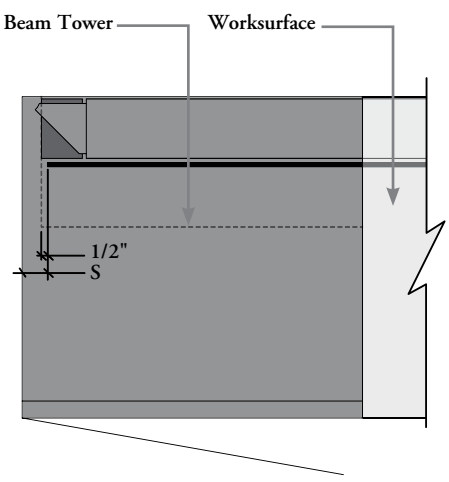

1x Beam Length minus **Support – Full (S)**

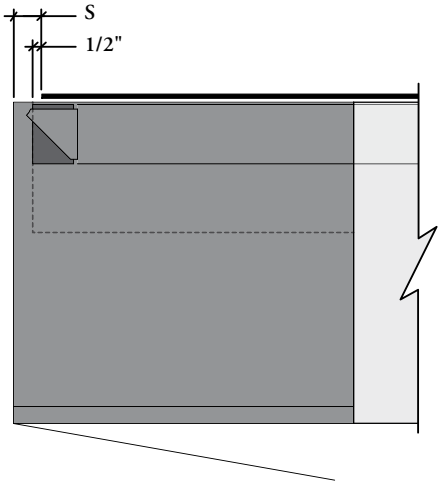

1x Beam Length minus **Support – Full (S)**

planning with width reduction for structural beam cover – side (continued)

workstation | inside view | outside view

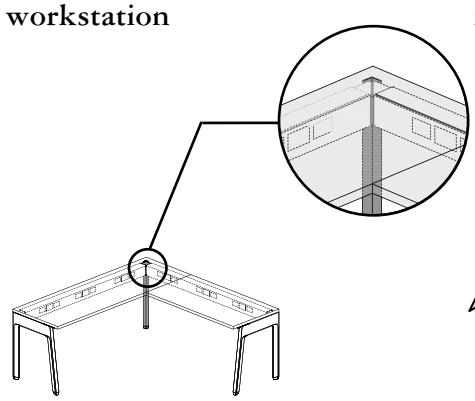

Cover Application with Corner Post (C)

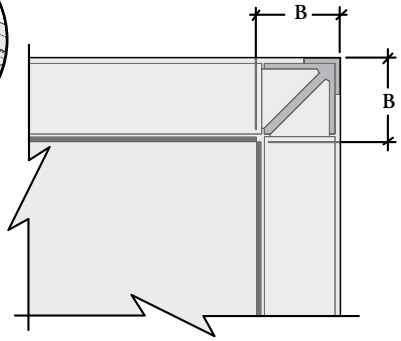

2x Beam Length minus **Beam – Full (B)**

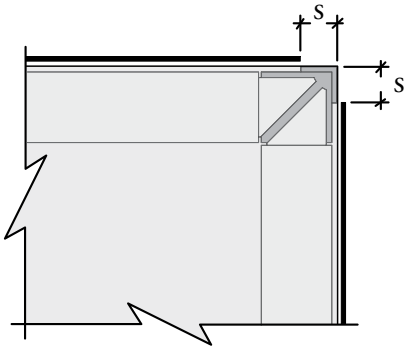

2x Beam Length minus **Support – Full (S)**

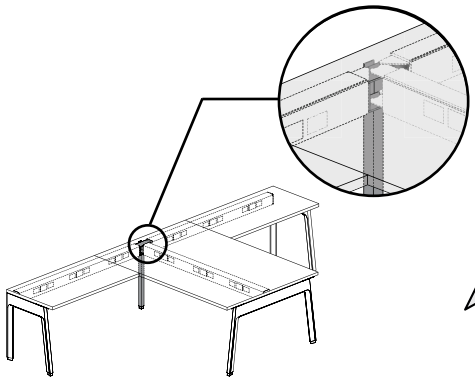

Cover Application with In-Line – Single-Sided Post (T) (Perpendicular Configuration)

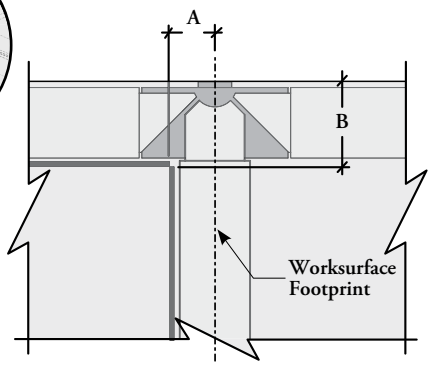

- 1x Beam Length minus **Beam – Half (A)**
- 1x Beam Length minus **Beam – Full (B)**

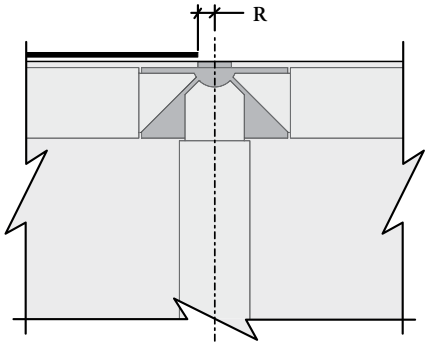

1x Beam Length minus **Support – Half (R)** on both sides

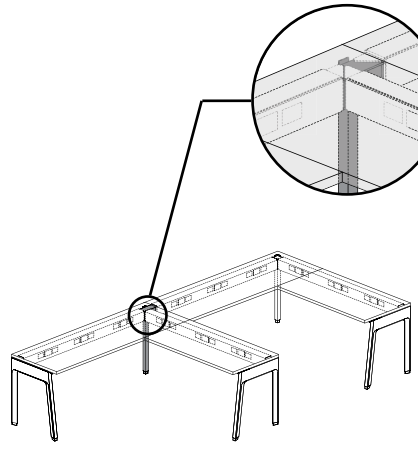

Cover Application with In-Line – Single-Sided Post (T) (Parallel Configuration)

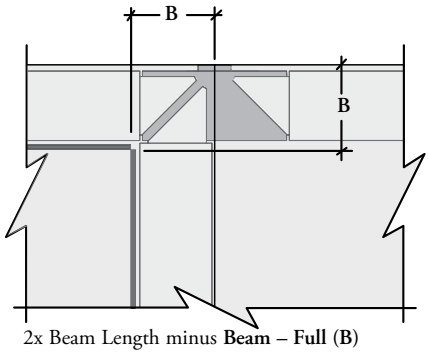

2x Beam Length minus **Beam – Full (B)**

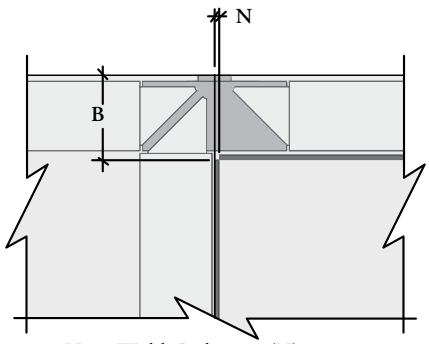

- 1x **None** Width Reduction (**N**)
- 1x Beam Length minus **Beam – Full (B)**

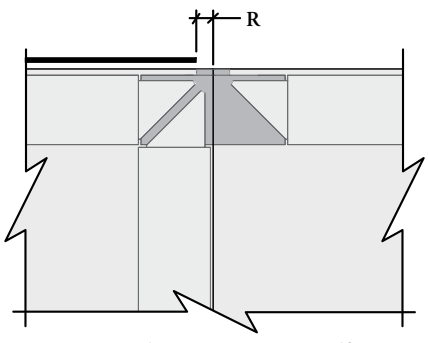

1x Beam Length minus **Support – Half (R)** on both sides

planning with width reduction for structural beam cover – side (continued)

workstation

inside view only

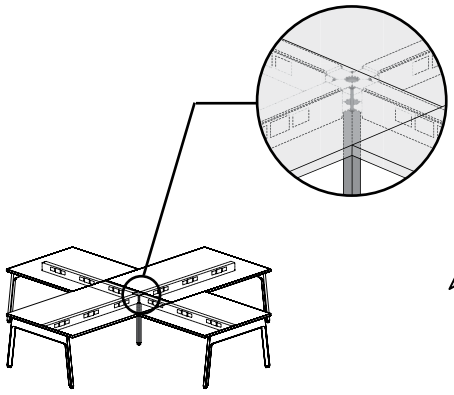

Cover Application with In-Line – Double-Sided Post (X) (Perpendicular Configuration)

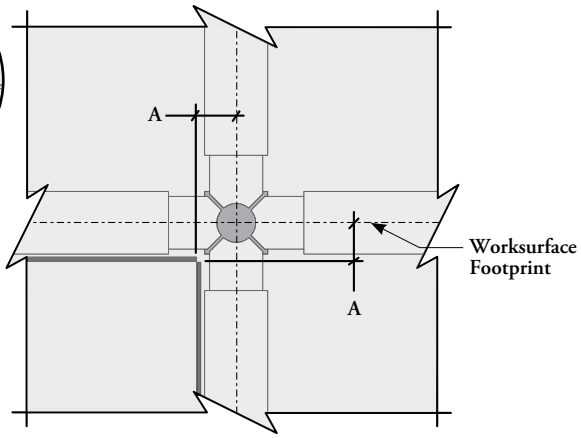

4x Beam Length minus **Beam – Half (A)**

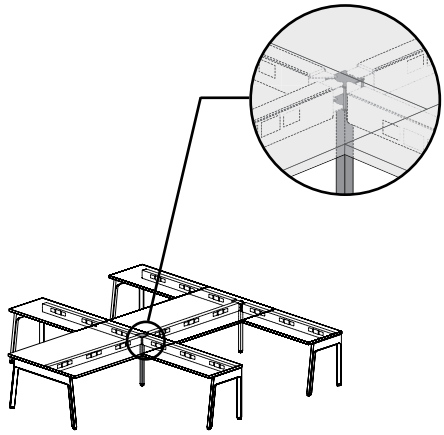

Cover Application with In-Line – Double-Sided Post (X) (Parallel Configuration)

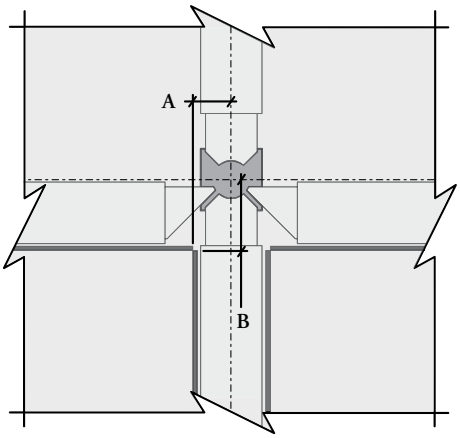

- 2x Beam Length minus **Beam – Half (A)**
- 2x Beam Length minus **Beam – Full (B)**

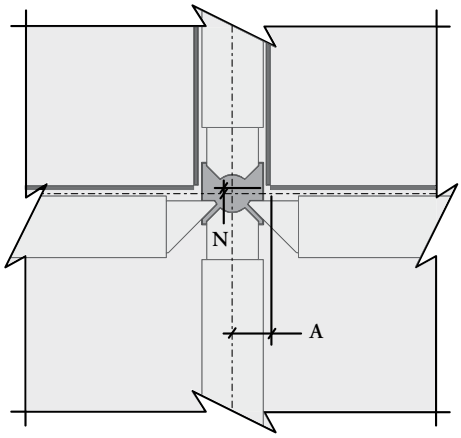

- 2x Beam Length minus **Beam – Half (A)**
- 2x **None** Width Reduction (N)

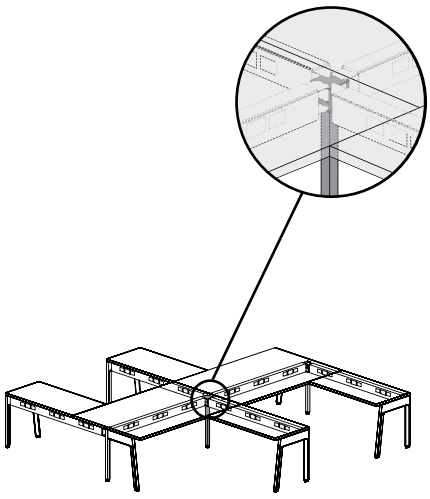

Cover Application with In-Line – Double-Sided Post (X) (Offset Configuration)

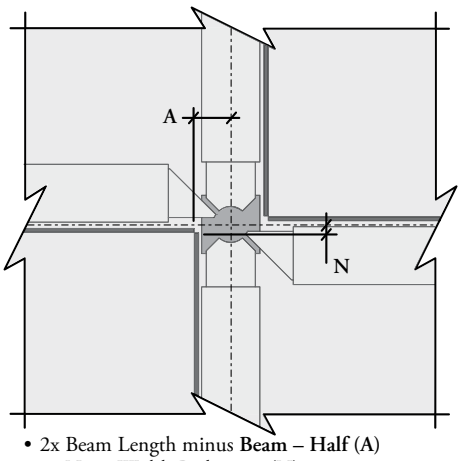

- 2x Beam Length minus **Beam – Half (A)**
- 2x **None** Width Reduction (N)

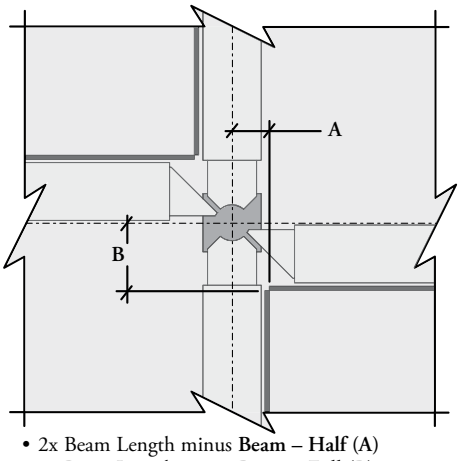

- 2x Beam Length minus **Beam – Half (A)**
- 2x Beam Length minus **Beam – Full (B)**

planning with width reduction for structural beam cover – side (continued)

workstation

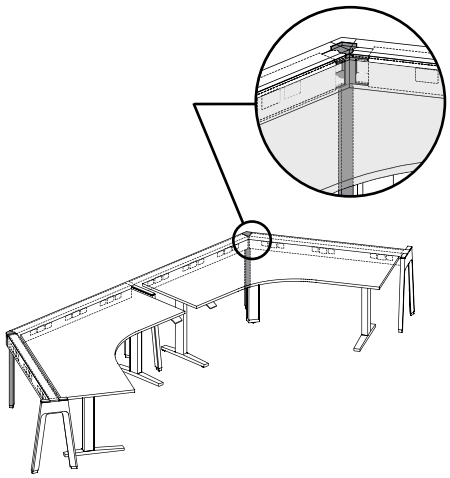

Cover Application with Low Structural Post – 120° or Structural Post – 120° (Y) (120° Configuration)

inside view

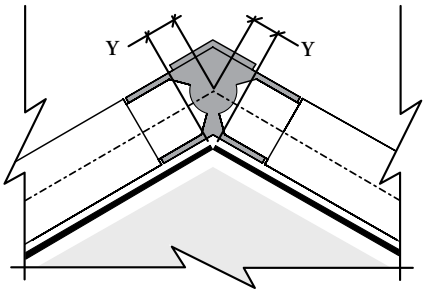

• 2x Beam Length minus **Post – 120° (Y)**

outside view

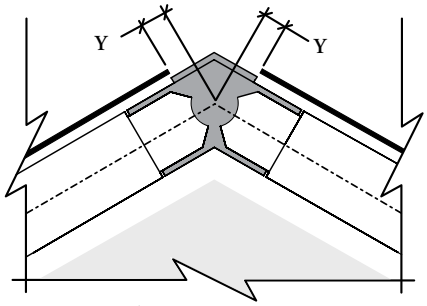

• 2x Beam Length minus **Post – 120° (Y)**

workstation

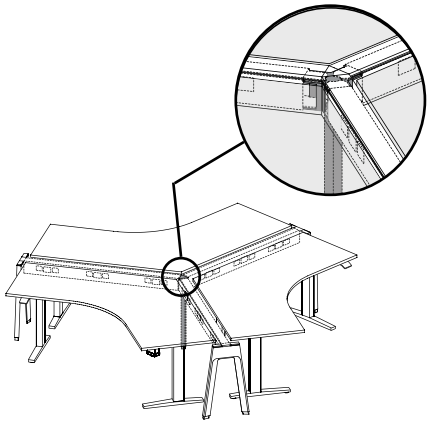

Cover Application with Low Structural Post – 120° or Structural Post – 120° (Y) (120° Configuration)

inside view

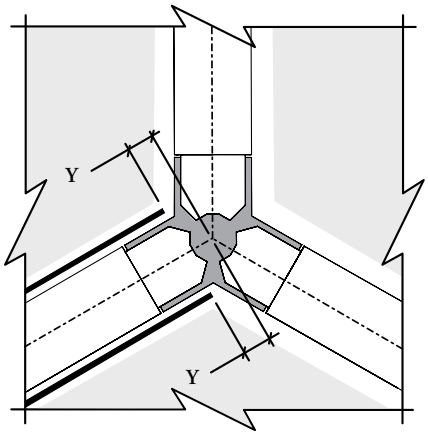

• 6x Beam Length minus **Post – 120° (Y)**

planning with structural beam cover – top

- Can be installed on- or off-module on top of a structural beam
- Can be used in linear, perpendicular or 120° configuration
- Can be specified with or without finish cap

off-module application

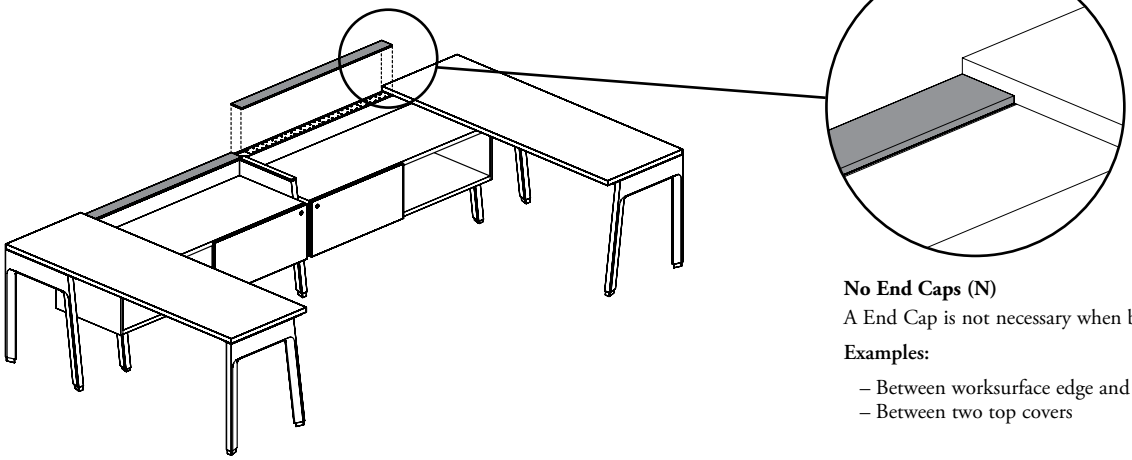

Three end cap options are available:

No End Caps (N)
A End Cap is not necessary when both sides are not exposed

Examples:

– Between worksurface edge and second cover (Shown)
– Between two top covers

on-module applications

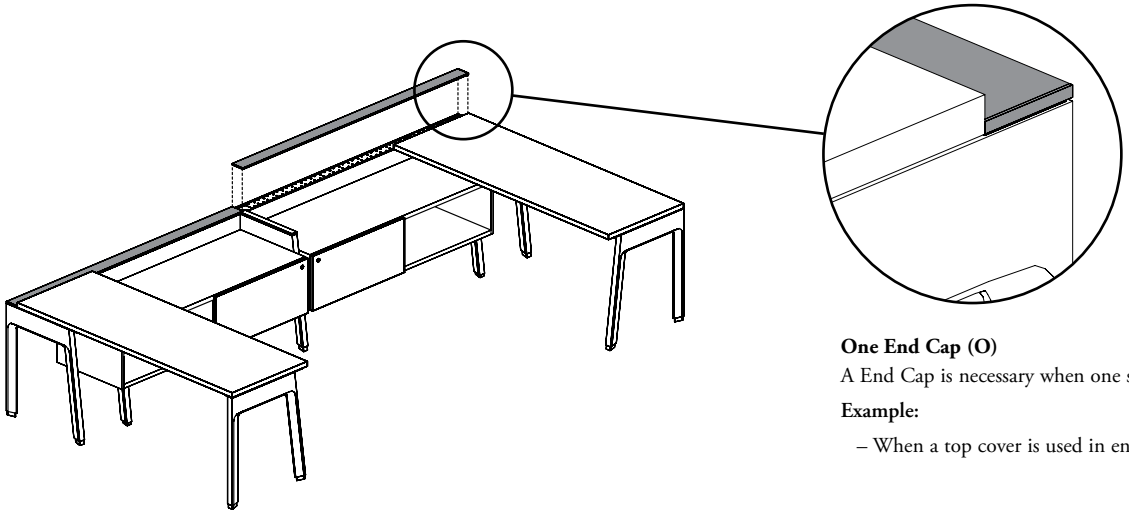

One End Cap (O)
A End Cap is necessary when one side is exposed

Example:

– When a top cover is used in end of runs (Shown)

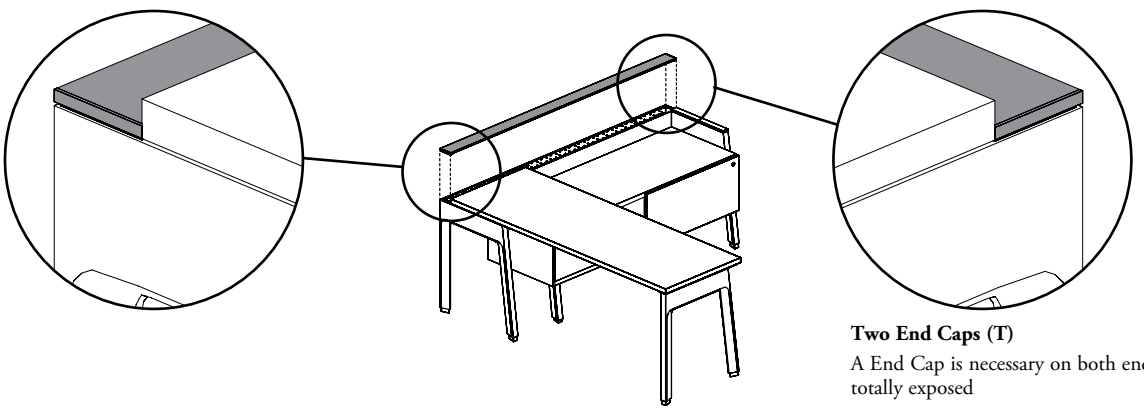

Two End Caps (T)
A End Cap is necessary on both ends when the sides are totally exposed

Example:

– On both ends of a workstation (Shown)

planning with structural beam cover – top (continued)

- Can be used in combination with Elevated, Floor and Add-On Screens – Beam-Mounted, with Beam-Mounted Shelf, with Beam-Mounted Seat or with Exposed Beam Worksurfaces
- Elevated and Floor Screens – Beam-Mounted, Beam-Mounted Shelf, Beam-Mounted Seat and Exposed Beam Worksurfaces allow mounting Structural Beam Cover – Top simultaneously
- Add-On Screens – Beam-Mounted come with frame extrusions which replaces a top cover

with beam-mounted add-on screen – restriction

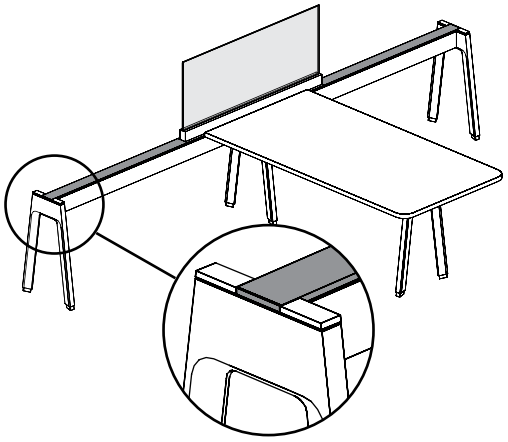

Beam-Mounted Add-On Screens must **not** be installed over top covers. They can only be installed beside top covers and in this case, the end of the top cover should **not** be finished. On the station beside, both top covers must be specified with One End Cap (O)

with beam-mounted shelf and writable glass worksurface – center beam-mounted – no restriction

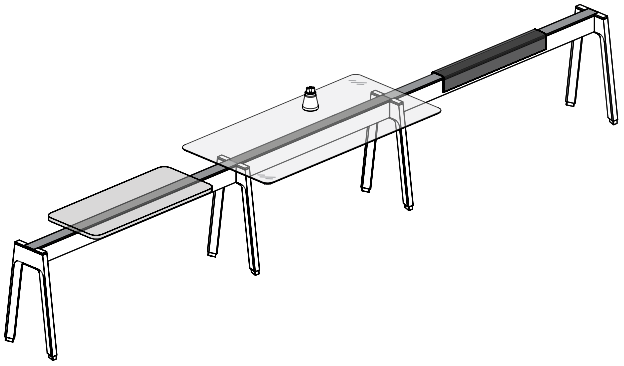

A top cover must be specified under Beam-Mounted Seat, Shelf and Writable Glass Worksurface – Center Beam-Mounted, even if these are specified full width

with writable glass worksurface – center beam-mounted and beam-mounted screen – restriction

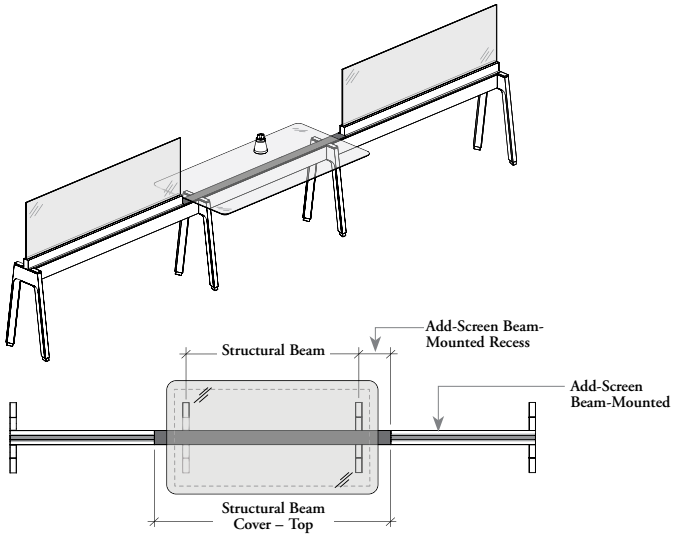

When Writable Glass Worskurface – Center Beam are used on a fence with adjacent screens, beam cover must be specified exceeding the beam to fill the space left by off-module Add-On Screen

- Always specified Structural Beam Cover in one piece overlapping on the adjacent beam

  Example:
  72" wide Structural Beam with two 6" screen recessed equal 84" wide Structural Beam Cover – Top

- If the total exceed 84", use two Structural Beam Top of equal width or the combination of two with the closest dimensions

  Example:
  90" wide Structural Beam with two 6" screen recessed equal one 48" wide Structural Beam Cover – Top and one 42" Structural Beam Cover – Top

planning with width reduction for structural beam cover – top

Four Width Reduction options can be specified:

none (N)

Can be specified full length without width reduction

Off-Module Application

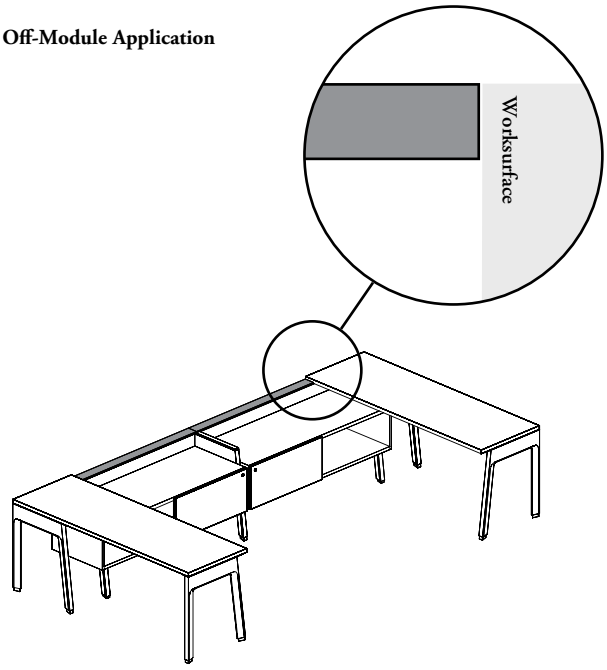

On-Module Application

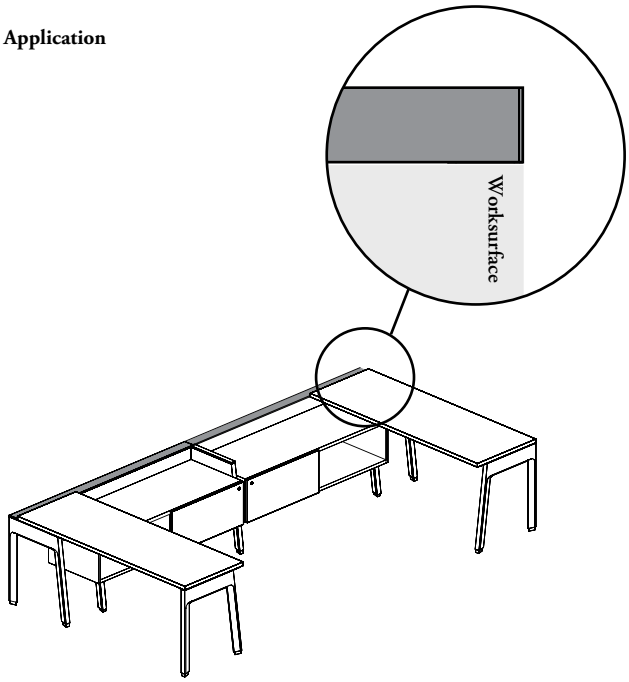

Linear Application

beam – half (A)

When perpendicular beam is crossing a Double-Sided Beam, the width of the cover has to be reduced by half of the beam depth, the **Beam – Half (A)** option must be specified

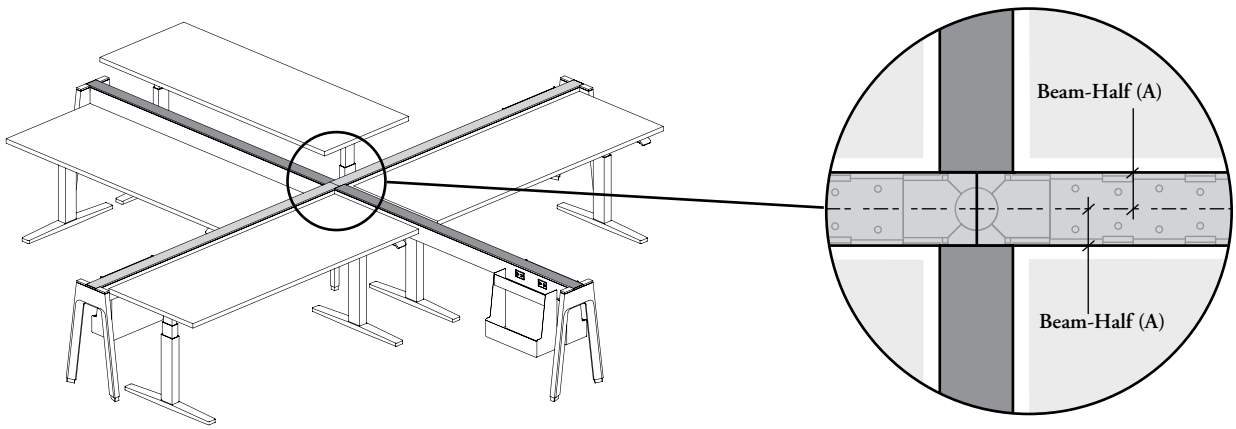

Perpendicular Application

planning with width reduction for structural beam cover – top (continued)

Four Width Reduction options can be specified (continued):

beam – full (B)

When perpendicular beam is crossing a Single-Sided Beam, the width of the cover has to be reduced by the beam full depth, the **Beam – Full (B)** option must be specified

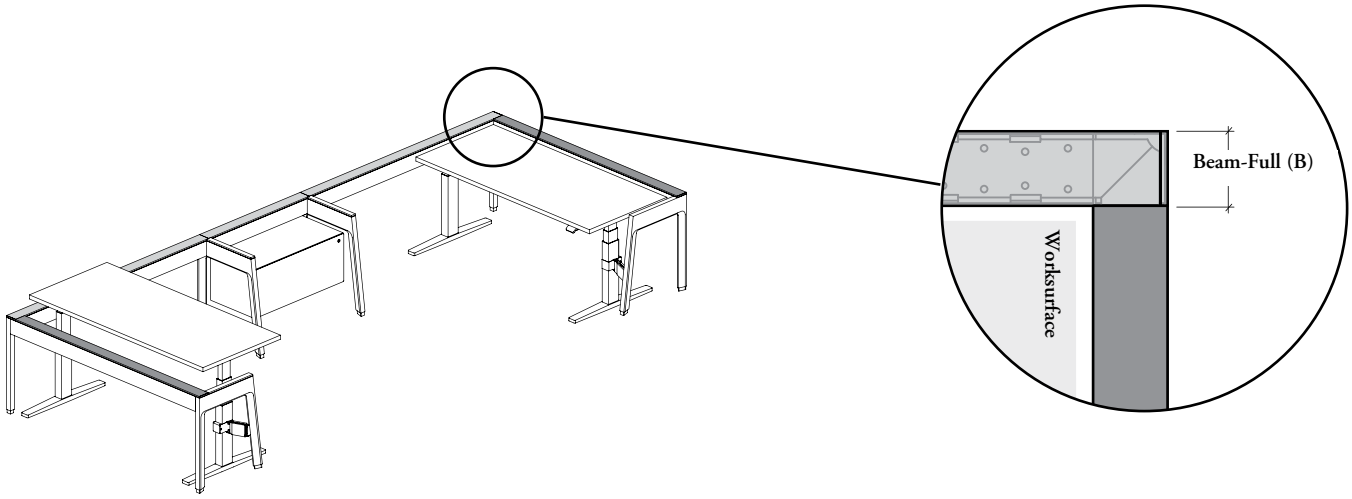

Perpendicular Application

post – 120° (Y)

When beam is crossing a 120° Strucutral Post (Two-Way Double-Sided Beam (V) or Three-Way Double-Sided Beam (Y)), the width of the cover has to be reduced by the 120° connection, the **Post – 120° (Y)** option must be specified

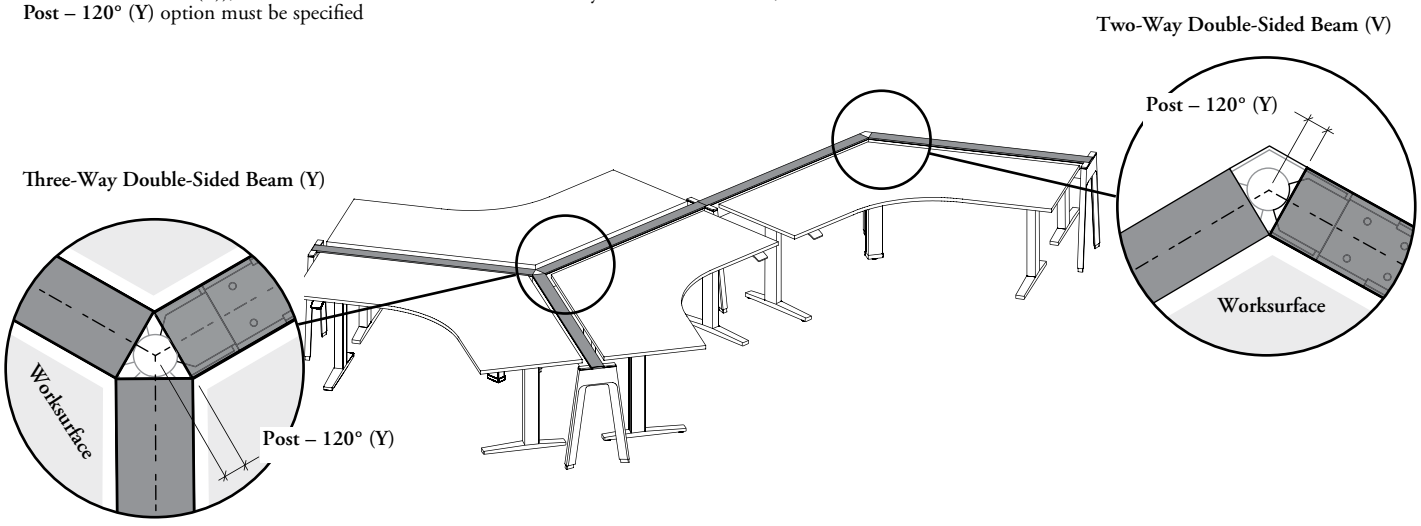

120° Application

planning with width reduction for structural beam cover – top (continued)

Structural Beam Cover – Top specification sequence should be considered when planning a 90° exposed beam application

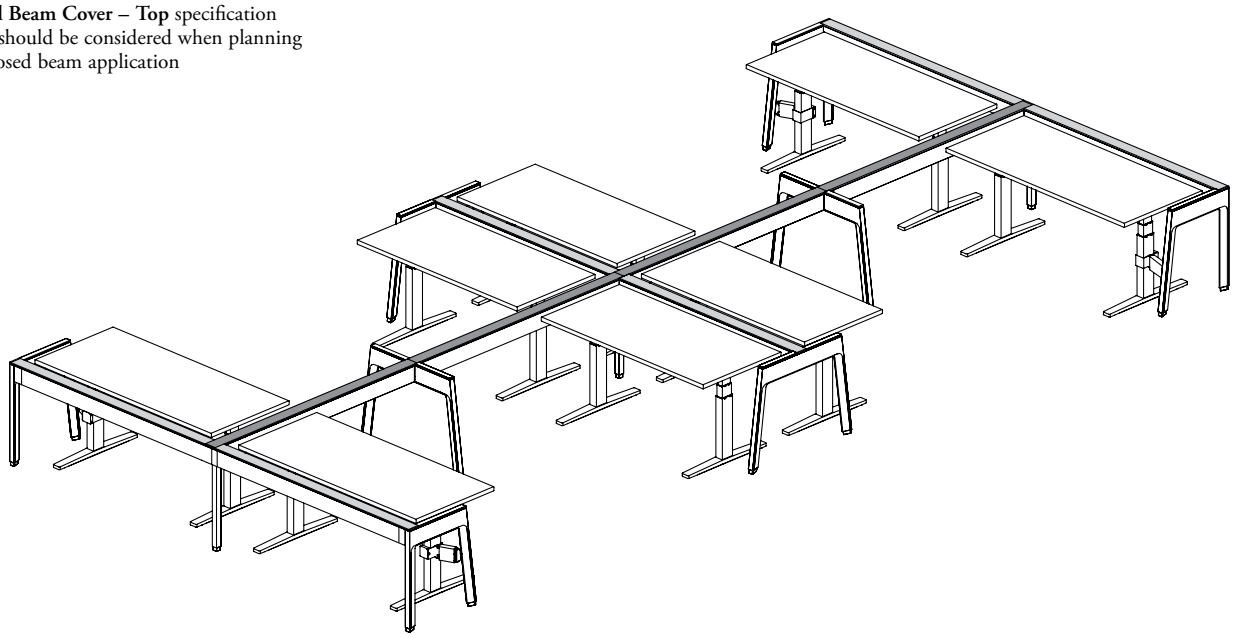

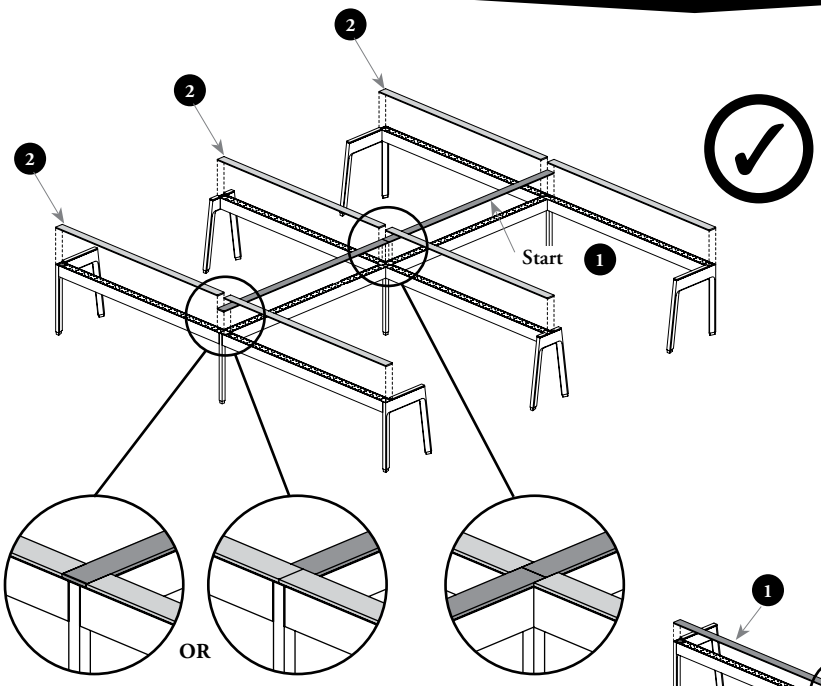

Specification Steps

- The specification of Structural Beam Covers – Top must be started by the continuous spine of top covers first and finished with reduced configurations
- End Cap is **not** available, at the reduced end of a top cover

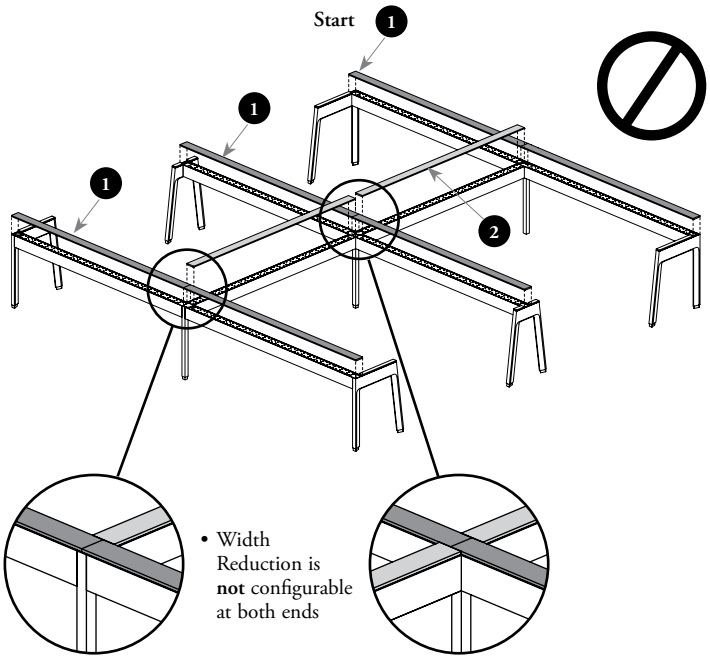

- Width Reduction is **not** configurable at both ends

planning with bottom wire cover for structural beam – standard

- Bottom Wire Cover for Structural Beam – Standard is specified to prevent people from reaching wires inside the beam but is **not** mandatory
- Bottom wire covers are recommended in integrated social, collaborative and casual applications
- Are recommended to protect mesh construction of (18", 21", and 24") Power Harnesses (JNEPH) and Base Feed (JNEPBF), Split Base Feed (JNESBF) and Ceiling Feed (JNEPCF)
- Can be mounted on single- and double-sided structural beams
- Can be cut on-site for optimal adjustment

dimensions

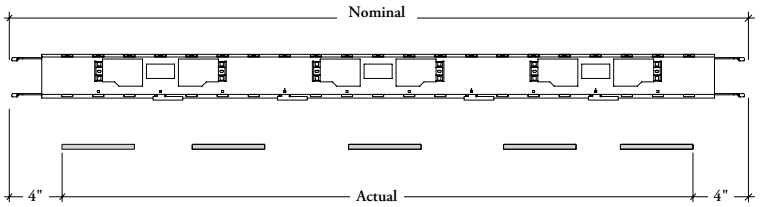

applications

Workstation

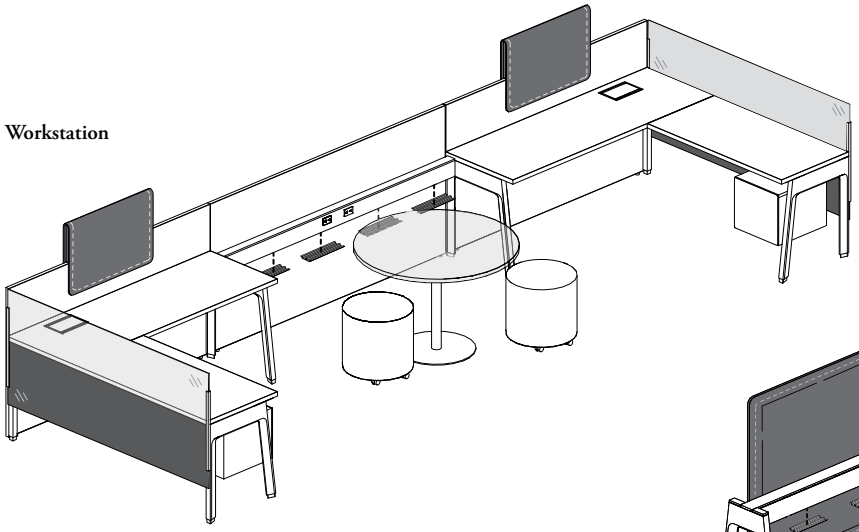

Fence

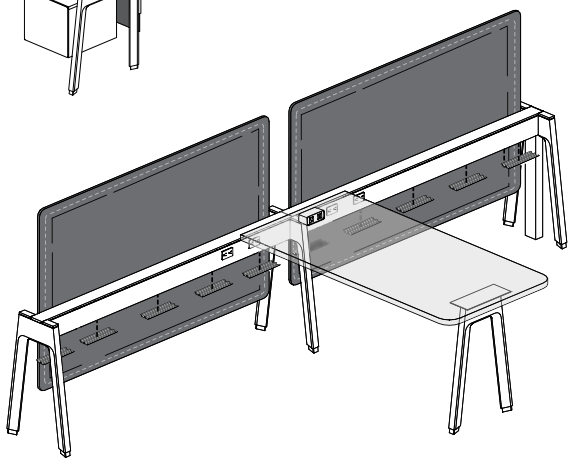

Bottom Wire Cover for Structural Beam Covers – Standard are compatible with:

– Elevated and Floor Screens – Beam-Mounted
– Add-On Screens – Beam-Mounted
– Corner Screen (JNSECF)
– Beam-Mounted Modesty Panel (JNABMS)

With Credenzas and Storage Cabinet for Height-Adjustable Run-Off

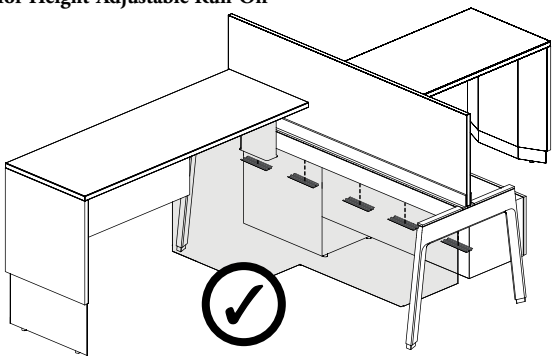

Bottom Wire Cover for Structural Beam Covers – Standard can be installed with suspended and semi-suspended Credenzas (JNBSF, JNBDF, JNBSO, JNBSOO, JNBDO, JNBDOO, JNBSC, JNBDC) and with Storage Cabinet for Height Adjustable Run-Off (JNHSC). Can be overbuilt if the beam bottom is not visible or accessible

planning with structural post cover – top

The Structural Post Cover – Top is offered separately for re-configuration purposes.

- Finishes the top of a Structural Post – 120° (JNDPLY or JNDPY) by continuing the aesthetic look of Structural Beam Cover – Top (JNDBTC) or the mounting extrusion of an Add-On Screen – Beam-Mounted
- Two top cover configurations are available:

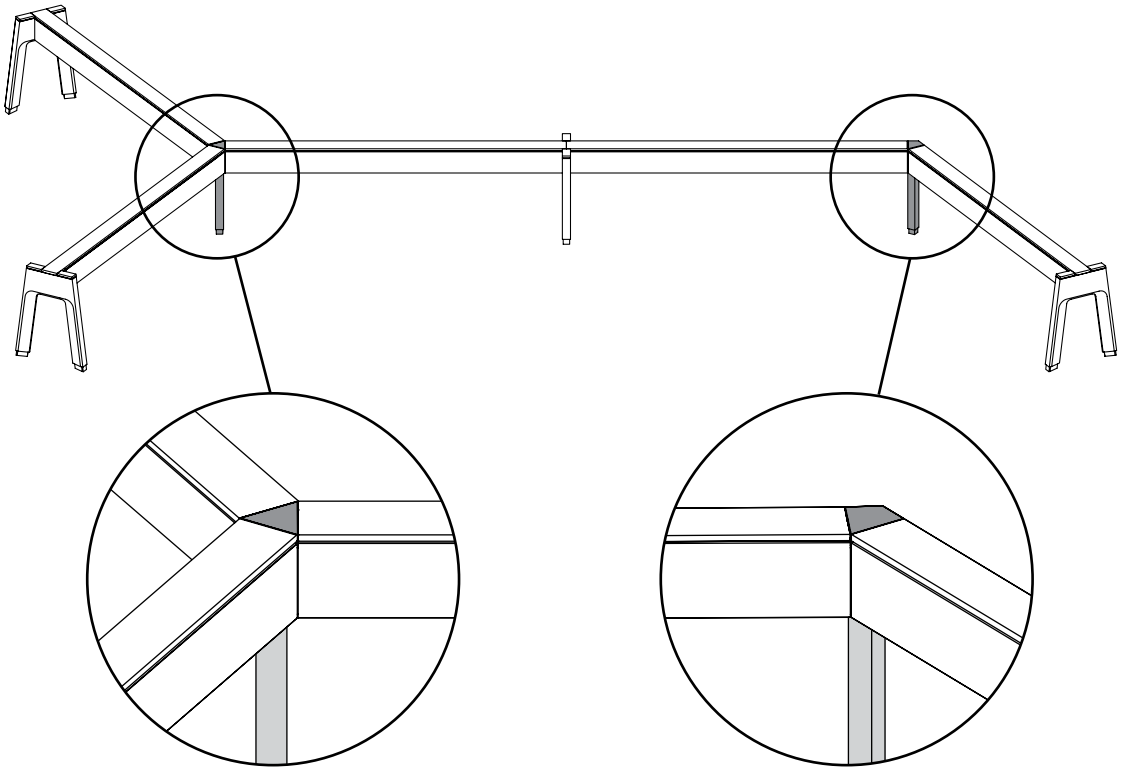

Structural Post Cover – Top
Three-Way 120° Configuration
(JNDCPT_Y)

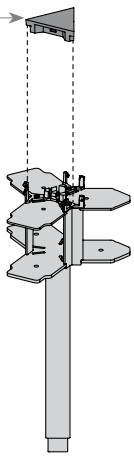

Low Structural Post – 120° (JNDPLY_Y) (Shown)
or Structural Post – 120° (JNDPY_Y)

Structural Post Cover – Top
Two-Way 120° Configuration
(JNDCPT_V)

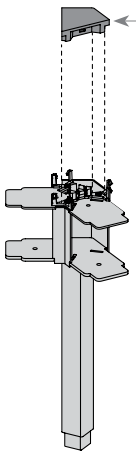

Low Structural Post – 120° (JNDPLY_V) (Shown)
or Structural Post – 120° (JNDPY_V)

planning with structural leg cover – top & structural leg bracket for worksurface

The Structural Leg Cover – Top and Structural Leg Bracket for Worksurface are offered separately for re-configuration purposes.

The Structural Leg Cover – Top (JNDLC) and Structural Leg Bracket for Worksurface (JNDLW) are interchangeable between them

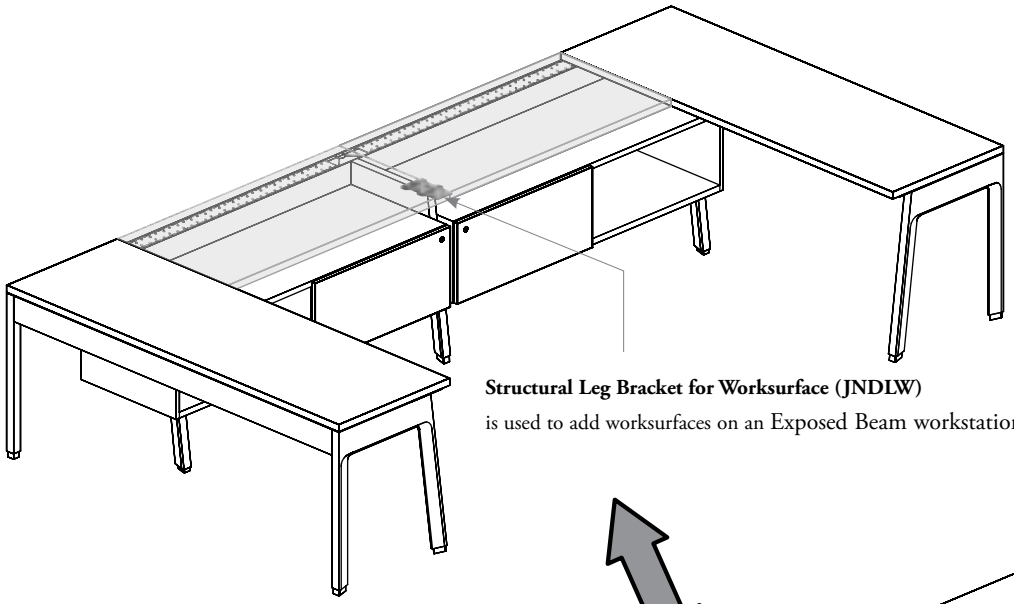

Structural Leg Bracket for Worksurface (JNDLW)
is used to add worksurfaces on an Exposed Beam workstation

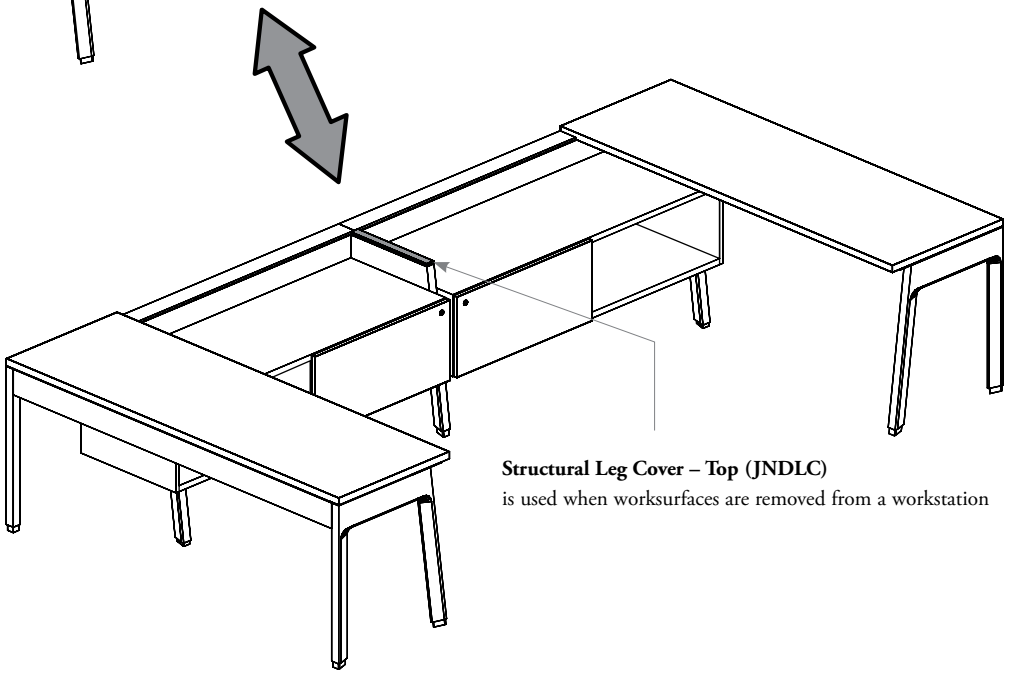

Structural Leg Cover – Top (JNDLC)
is used when worksurfaces are removed from a workstation

Four Leg Configurations are available:

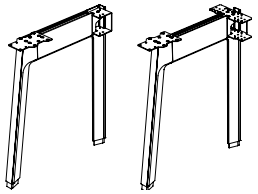

Structural Legs – Single-Sided (S)

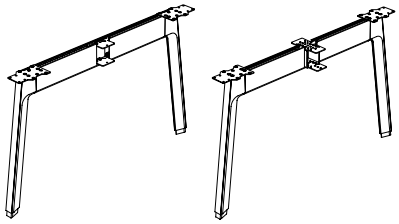

Structural Legs – Double-Sided (D)

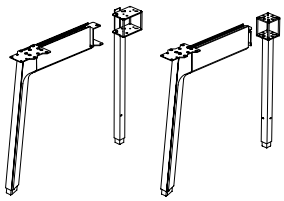

Structural Post with Front Legs (P)

Structural Leg – Fence (F)
Structural Leg Cover Top only

planning with structural leg cover – top & structural leg bracket for worksurface (continued)

- The leg top cover and bracket can be specified separately for Structural Legs
- Are used for reconfiguration purposes only
- Cover must always be specified full leg depth

top cover

- Finishes the top of legs in exposed beam configurations
- Can be used on the following supports:
  - 15" deep Low Structural Leg – Fence or 18" deep Structural Leg – Fence (F)
  - 18" or 24" deep Structural Leg – Single-Sided (S)
  - 18" or 24" deep Structural Post with Front Leg (P)
  - 36" or 48" deep Structural Leg – Double-Sided (D)
- Only one cover is supplied except for Double-Sided and Fence configurations specified otherwise than with combo options where two covers are supplied

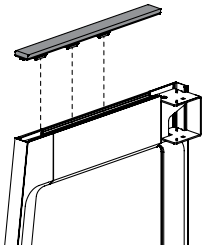

combo worksurface & top cover

- Only one top cover is supplied, the worksurface bracket must be ordered separately if needed
- Can be specified with 36" or 48" deep Structural Leg – Double-Sided (D), 15" deep Low Structural Leg – Fence or 18" deep Structural Leg – Fence (F)

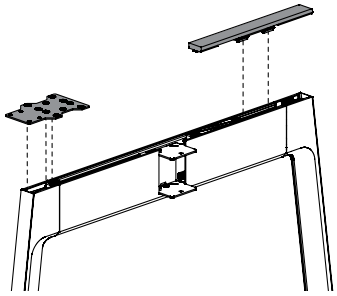

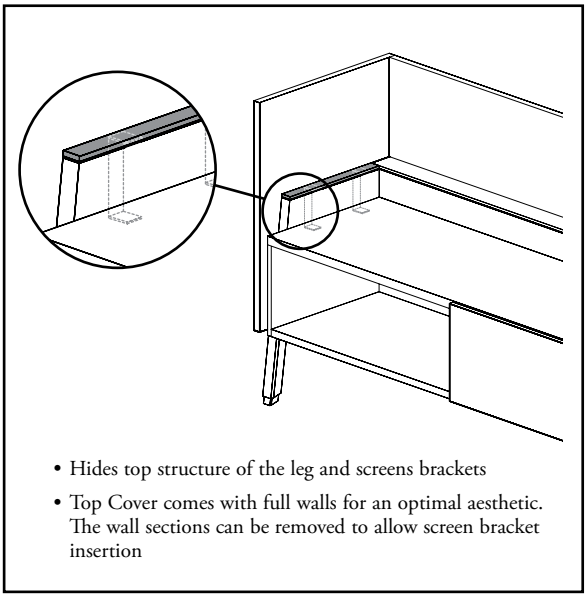

- Hides top structure of the leg and screens brackets
- Top Cover comes with full walls for an optimal aesthetic. The wall sections can be removed to allow screen bracket insertion

worksurface bracket

- Attaches the worksurface to the Structural Leg to maintain stability and level the surface
- Available with Single- and Double-Sided styles, or with Structural Post with Front Leg
- Can be used only on the following supports:
  - Structural Leg – Single- (S) or Double-Sided (D)
  - Structural Post with Front Leg (P)
- Single-sided and post with front leg come with one bracket, double-sided comes with two

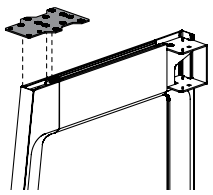

worksurfaces

worksurfaces

UNDERSTANDING WORKSURFACES 312

STANDARD WORKSURFACE BASICS 313

PLANNING WITH STANDARD WORKSURFACES 317

EXPOSED BEAM WORKSURFACE BASICS 320

PLANNING WITH EXPOSED BEAM WORKSURFACES 324

PLANNING WITH WORKSURFACES 327

PLANNING WITH ACCESS DOORS, GROMMETS & CUT-OUTS 330

PLANNING WITH SCREEN MOUNTING HOLES 342

HIGH PENINSULA WORKSURFACE BASICS 344

PLANNING WITH HIGH PENINSULA WORKSURFACE 346

GRAIN/PATTERN DIRECTION – WORKSURFACES 348

WORKSURFACE BRACKET BASICS 350

PLANNING WITH WORKSURFACE BRACKET 351

understanding worksurfaces

Expansion Cityline offers a variety of dimensions for primary and secondary worksurfaces, in single-sided or double-sided application. Peninsula worksurfaces are also available for collaboration.

Worksurfaces in this section are **NOT** compatible with EZ Fence Structure

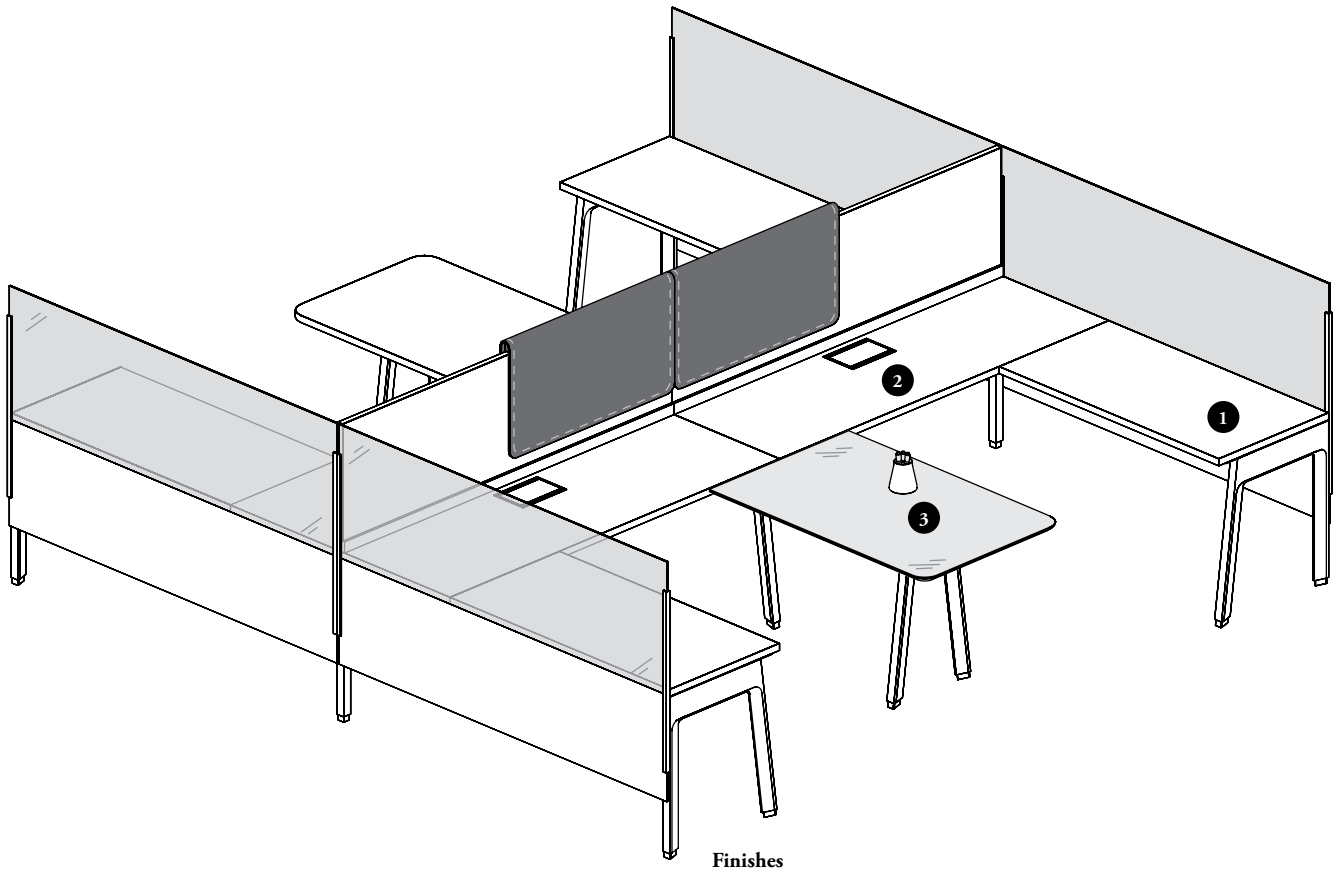

Finishes

Laminate Worksurface: Foundation Laminate
Edge Trim Styles: Flat Trim (1.5 mm) and/or Straight Trim (3 mm)
Edge Trim Finishes: Edge Trim colors
Writable Glass Worksurface: Back-Painted
Metal Tapered Edge: Foundation, Accent and Mica
Companion Marker Holder: Foundation, Accent and Mica
Worksurface Reinforcing Channel: Ebony (52)
Beam-Mounted Worksurface Brackets: Ebony (52)
Linking Plates: Ebony (52)

1. Worksurface widths are available in 3" increments to match up with storage components. For details, refer to the Storage section

   Worksurfaces **cannot** span more than 84" without additional floor support. For further details, refer to the Desk Structures section

   Worksurfaces can be desk structure- and/or storage-mounted or specified with freestanding legs on one side to create semi-supported worksurfaces For details, refer to the Desk Structures & Desk Accessories sections
2. Access Doors and grommets can be specified on all surfaces
3. Peninsula Worksurfaces provide shared meeting spaces within a workstation or a fence application

standard worksurface basics

Expansion Cityline standard worksurfaces are offered in single-sided, double-sided and peninsula configurations, mounted over the desk structure in fully concealled or semi-exposed beam applications.

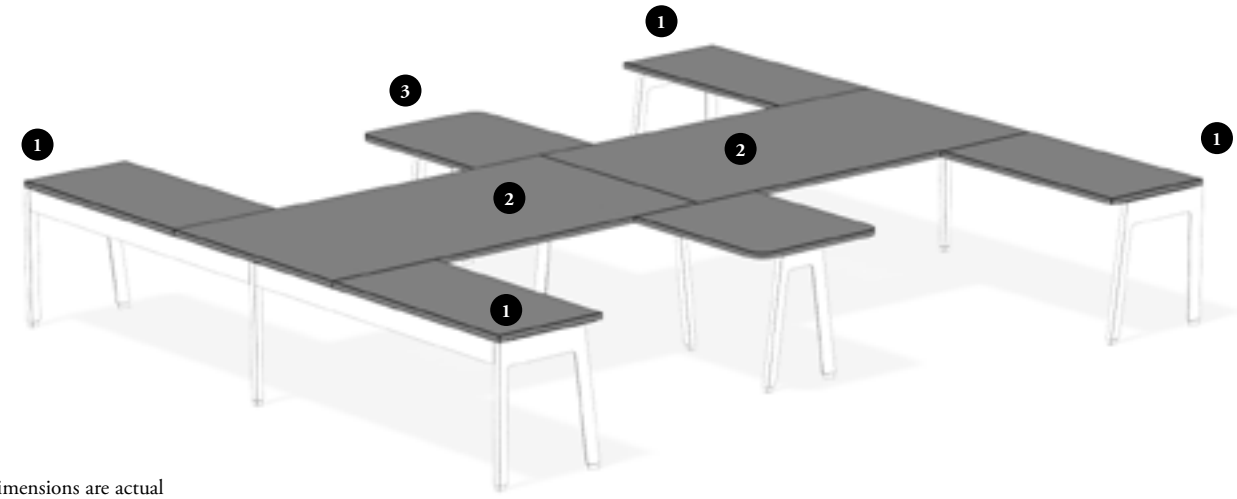

- All dimensions are actual
- Available with or without Screen Mounting Holes
- User edge trim style can be Straight Trim (3 mm) or Flat Trim (1.5 mm)
- Available with Access Door, Rectangular Grommet and/or Square Cut-Out

Single-Sided Rectangular Worksurface (JNWSSN) or Single-Sided Rectangular Worksurface – Cross Grain (JNWSCN) 1

- Runs parallel on a Single-Sided Structural Beam or perpendicular to any Structural Beam (JNDBB) or Chicago Structural Beam (JNDCB)
- Can also be used in unstructured return applications with a Freestanding Leg at the end opposite to beam. For details, refer to the Desk Structures & Desk Accessories sections
- Available in 18", 24" or 30" depths

Straight Grain only
Widths include 24" – 96" (3" increments)

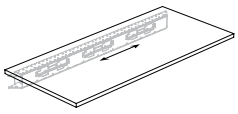

Cross Grain only
Widths include 24" – 60" (3" increments)

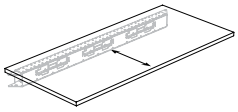

Double-Sided Rectangular Worksurface (JNWDSN) or Double-Sided Rectangular Worksurface – Cross Grain (JNWDCN) 2

- Runs parallel on a Double-Sided Structural Beam or perpendicular to any Structural Beam (JNDBB) or Chicago Structural Beam (JNDCB)
- Can also be used in unstructured return applications with a Freestanding Leg at the end opposite to beam. For details, refer to the Desk Structures & Desk Accessories sections
- Available in 36", 48" or 60" depths

Straight Grain only
Widths include 24" – 96" (3" increments)

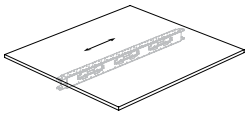

Cross Grain only
Widths include 24" – 60" (3" increments)

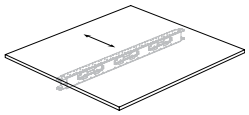

Peninsula Worksurface (JNWPSN) or Peninsula Worksurface – Cross Grain (JNWPCN) 3

- Runs perpendicular to any Structural Beam (JNDBB) or Chicago Structural Beam (JNDCB)
- Can also be used centered over a parallel Double-Sided Beam or in unstructured applications with a Freestanding Peninsula Leg at the end opposite to beam. For details, refer to the Desk Structures & Desk Accessories sections
- Available in 24", 30" or 36" depths
- Available with Curved or Standard corner detail

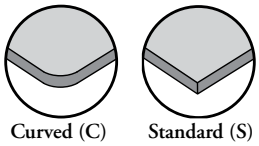

Straight Grain only
Widths include 48" – 84" (6" increments)

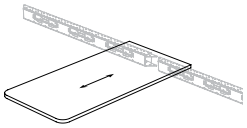

Cross Grain only
Widths include 48" – 60" (6" increments)

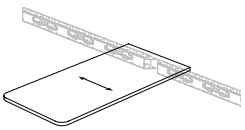

standard worksurface basics (continued)

In fully concealed beam application, writable glass worksurface are available in double-sided and peninsula configurations.

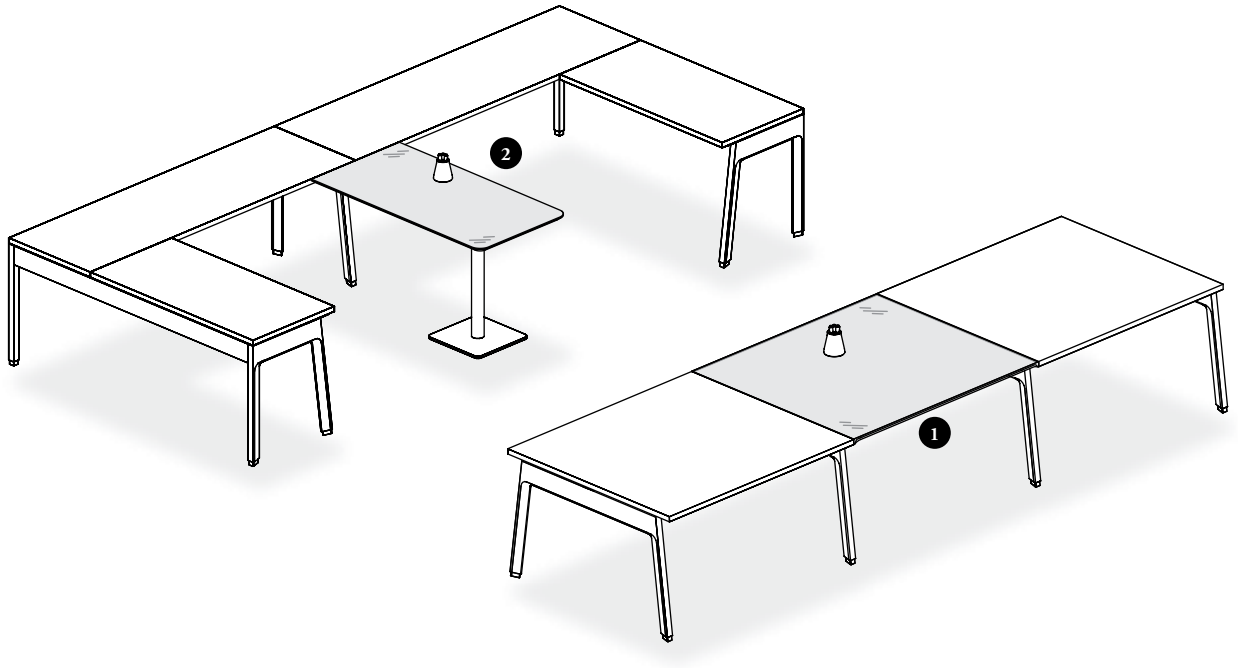

- All dimensions are actual
- Include a back-painted glass top mounted on a metal tapered user edge
- A Table Companion Marker Kit is included with all Writable Glass Worksurfaces
- Writable Glass Worksurface do **not** accept product with clamp-on fixation
- Accessories can be installed under the worksurfaces. For more details, refer to page 733

Double-Sided Writable Glass Worksurface (JNWDG) 1

- Runs parallel on a Double-Sided Structural Beam (JNDBB) or Chicago Structural Beam (JNDCB) and between two laminate Double-Sided Rectangular Worksurfaces (JNWDSN or JNWDCN)
- Comes with writable glass to laminate top transition corner for a continuous worksurface look
- Available with a 5/32" (4 mm) thick tempered glass
- Available in 36", 48" or 60" depths
- Widths include 24" – 72" (6" increments)

Not all dimension combinations are available. Refer to the individual product page

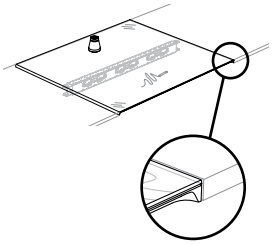

Writable Glass Peninsula Worksurface – Worksurface Connected (JNWPGN) 2

- Runs perpendicular to any single- or double-sided worksurface and any Beam-Mounted Cabinet
- Can also be used centered over a parallel Double-Sided Beam or in unstructured applications with a Freestanding Peninsula Leg at the end opposite to beam. For details, refer to the Desk Structures & Desk Accessories sections
- Available with a 5/32" (4 mm) thick tempered glass
- Available in 24", 30" or 36" depths
- Widths include 48" – 84" (6" increments)
- Available with Curved corner detail only
- Availaible with Square Cut-Out (S) only

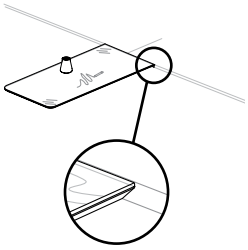

Curved

standard worksurface basics (continued)

writable glass worksurface profile

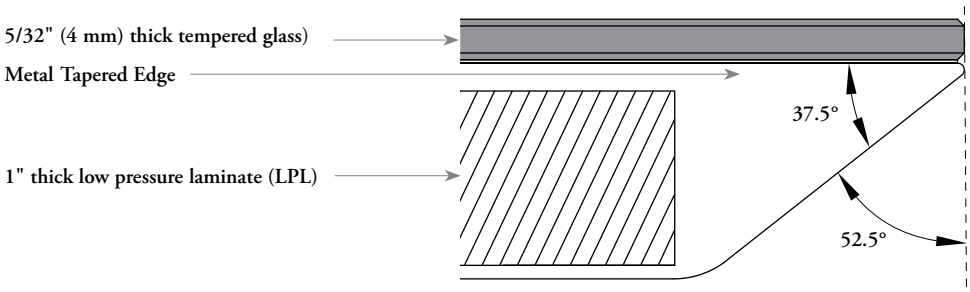

table companion marker kit

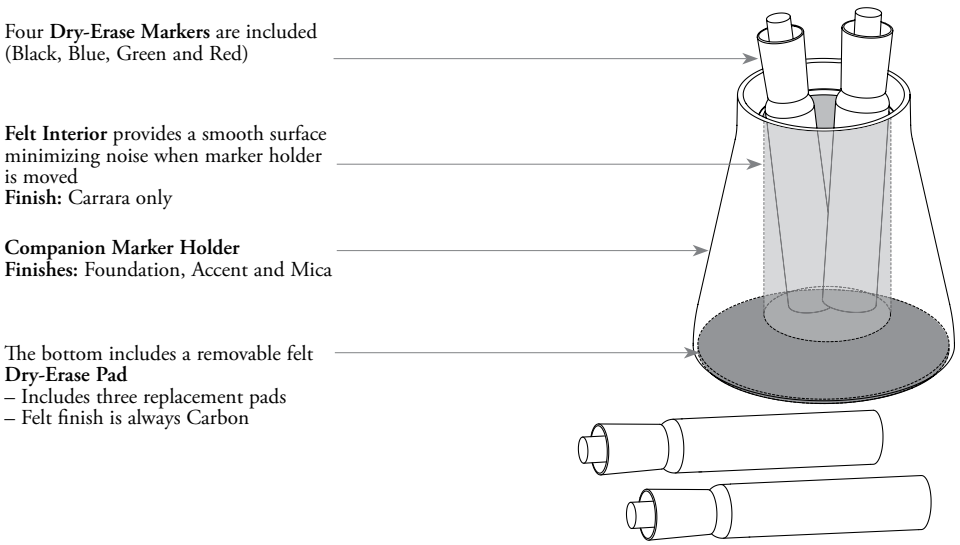

standard worksurface basics (continued)

worksurface dimensions

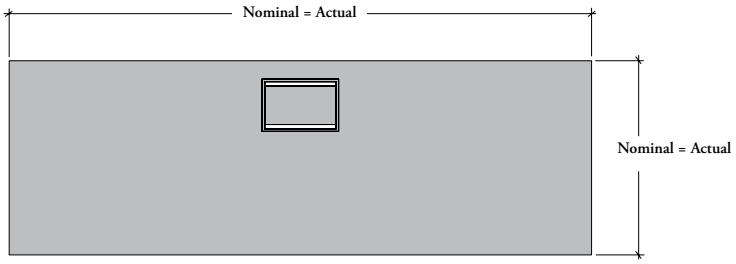

depth

Worksurface depth matches with support depth. Recessed supports can be used in in-line positions only. Refer to the Desk Structures section for details

single-sided worksurface

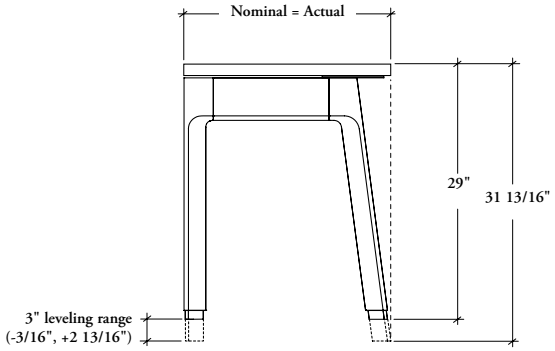

double-sided worksurface

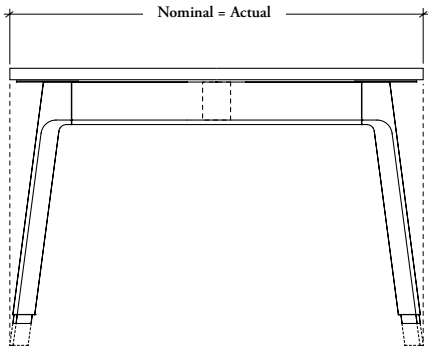

width

Worksurface is actual and can be used in single- or double-sided application

single-sided application

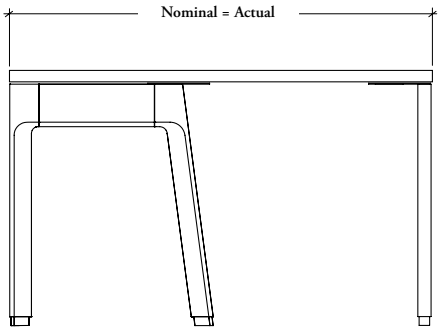

double-sided application

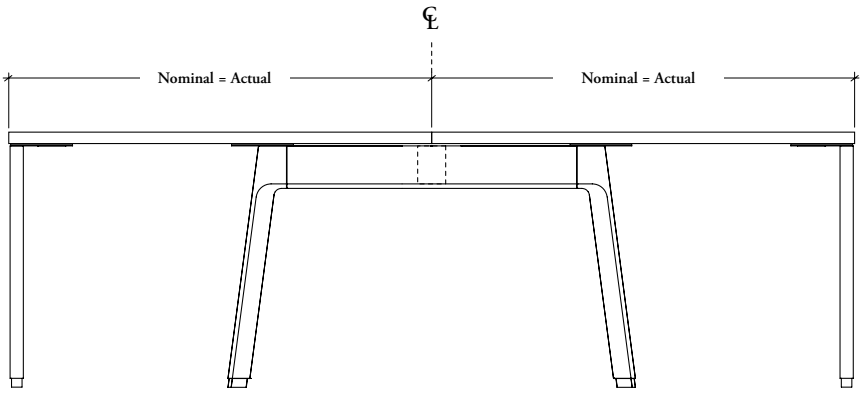

planning with standard worksurfaces

The following should be considered when planning with Expansion Cityline standard worksurfaces.

Single-Sided Worksurfaces (JNWSSN, JNWSCN) can be used on- or off-module on structural beam or in unstructured returns or run-offs

single-sided worksurfaces

	on-module	off-module
parallel to a beam	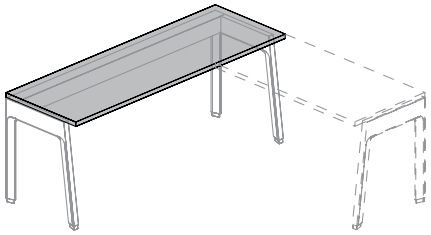	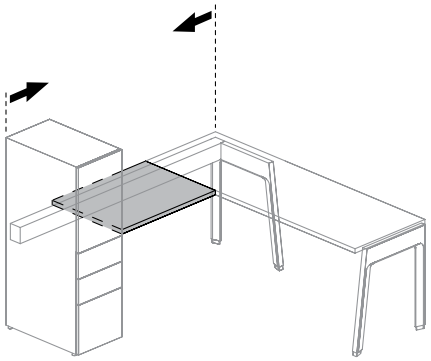
perpendicular to a beam	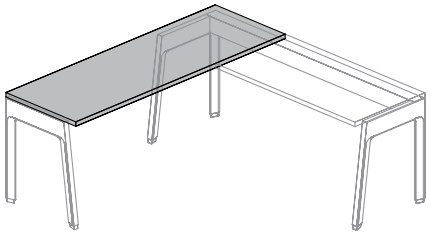	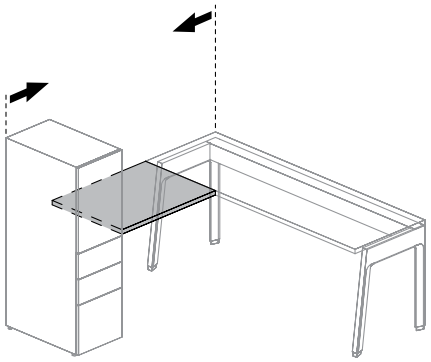
90° beams junction	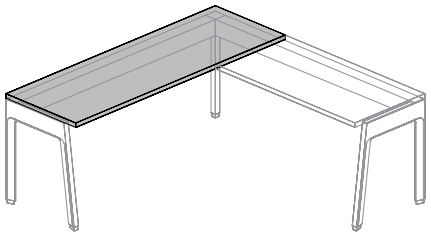	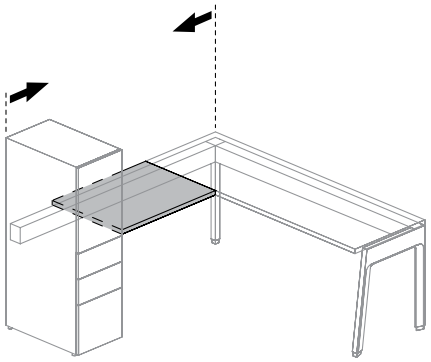
	Nominal	Nominal minus X = dimension to specify

Worksurface width can be influenced by more than one product listed below:

– Worksurfaces (JNWSSN, JNWSCN, JNWDSN, JNWDCN, JNWPSN, JNWPCN)
– Beam Towers (JNFBPL, JNFBWF, JNFBS, JNFBG)
– Dual Beam Tower (JNFBDF,)
– Beam-Mounted Cabinet (JNBBLO)

planning with standard worksurfaces (continued)

Double-Sided Worksurfaces (JNWDSN, JNWDCN) can be used on- or off-module on structural beam or in unstructured returns or run-offs

double-sided worksurfaces

on-module

parallel to a beam

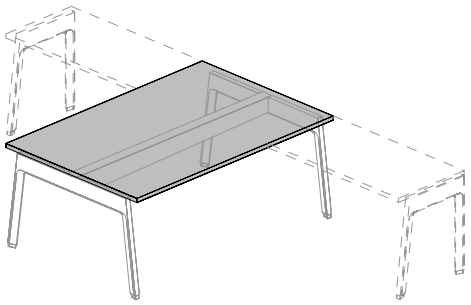

perpendicular to a beam

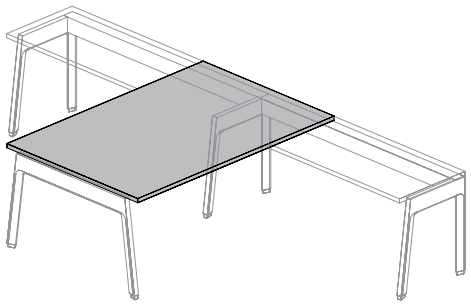

90° beams junction

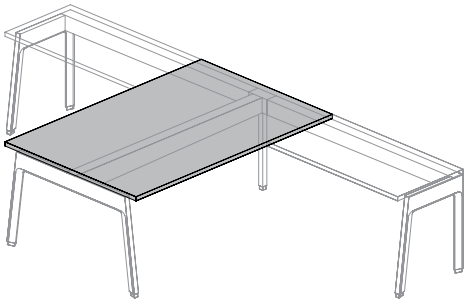

Nominal

off-module

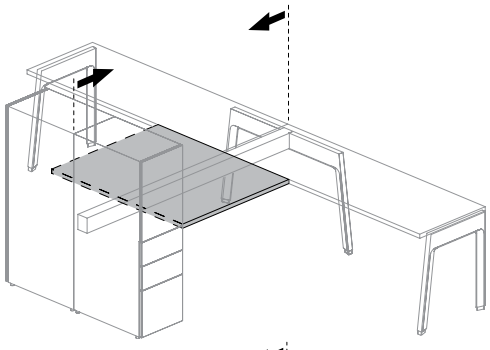

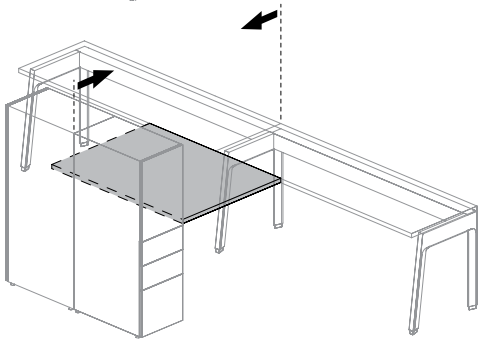

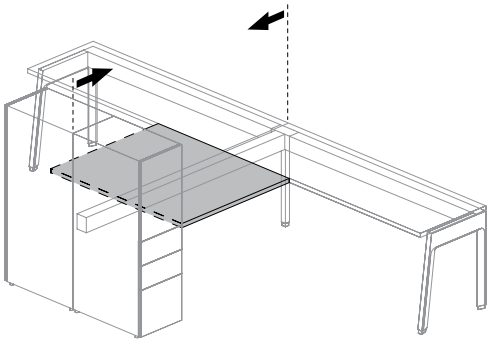

Nominal minus X = dimension to specify

Double-Sided Writable Glass Worksurface (JNWDG) can only be used on-module on Structural Beam and between two worksurfaces

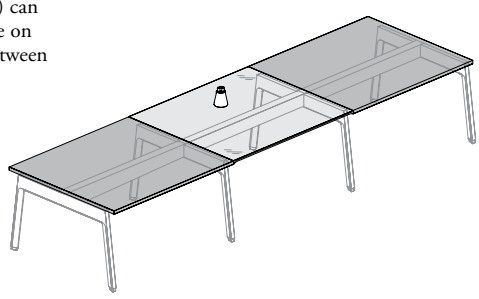

Worksurface width can be influenced by more than one product listed below:

– Worksurfaces (JNWSSN, JNWSCN, JNWDSN, JNWDCN, JNWPSN, JNWPCN)
– Beam Towers (JNFBPL, JNFBWF, JNFBS, JNFBG)
– Dual Beam Tower (JNFBDF)
– Beam-Mounted Cabinet (JNBBLO)

planning with standard worksurfaces (continued)

- Peninsula Worksurfaces (JNWPSN, JNWPCN) can be used on- or off-module on structural beam or in unstructured peninsula returns or run-offs
- Writable Glass Peninsula Worksurface – Worksurface Connected (JNWPGN) **cannot** be used in beam connected application

peninsula worksurfaces

	beam connected (Laminate Peninsula Worksurfaces only)	worksurface connected (Laminate and Writable Glass Peninsula Worksurfaces)
beam-mounted	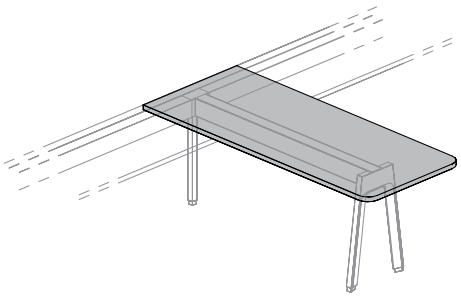	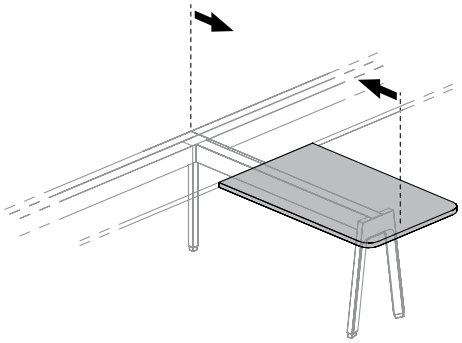
leg-mounted	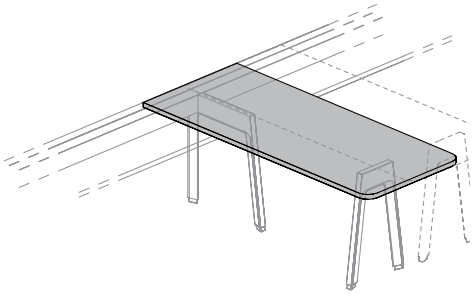	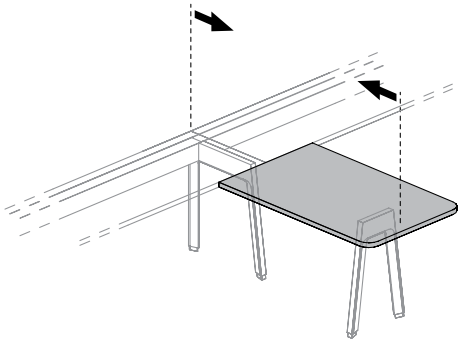
on-module	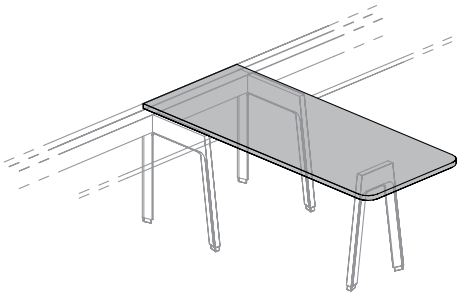	
fence	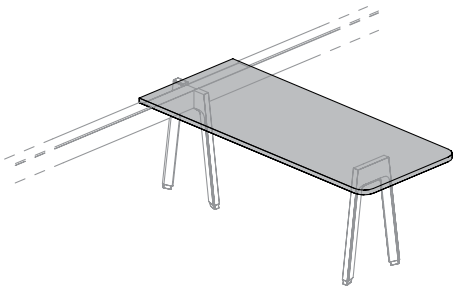	

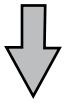

Nominal minus X = dimension to specify

Worksurface width can be influenced by more than one product listed below:

– Worksurfaces (JNWSSN, JNWSCN, JNWDSN, JNWDCN, JNWPSN, JNWPCN)

exposed beam worksurface basics

Expansion Cityline exposed beam worksurfaces are offered in single-sided, double-sided and peninsula configurations. They mount off the beam in fully exposed applications.

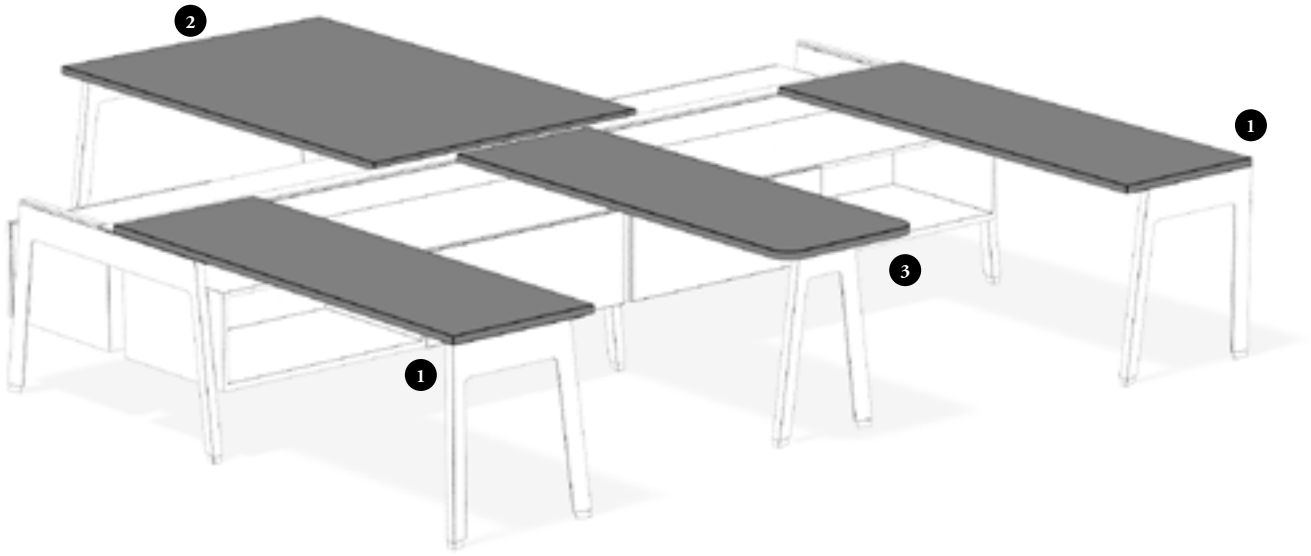

- Run perpendicular to a Single- or Double-Sided Structural Beam (JNDBB) or Chicago Structural Beam (JNDCB), as specified
- Depth dimensions are actual, width dimensions are nominal
- User edge trim style can be Straight Trim (3 mm) or Flat Trim (1.5 mm)
- Available with Access Door, Rectangular Grommet and/or Square Cut-Out

Single-Sided Rectangular Worksurface – Exposed Beam (JNWRSE) or Single-Sided Rectangular Worksurface – Cross Grain – Exposed Beam (JNWSCE) 1

- Can also be mounted on a parallel Single-Sided Beam or be supported with a Freestanding Leg at the end opposite to mandatory beam. For details, refer to the Desk Structures & Desk Accessories sections
- Available in 18", 24" or 30" depths
- Available with or without Screen Mounting Holes

Straight Grain only
Widths include 24" – 96" (3" increments)

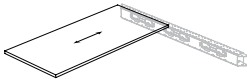

Cross Grain only
Widths include 24" – 60" (3" increments)

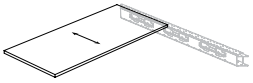

Double-Sided Rectangular Worksurface – Exposed Beam (JNWDSE) 2

- Can also be mounted on a parallel Double-Sided Beam or be supported with a Freestanding Leg at the end opposite to mandatory beam. For details, refer to the Desk Structures & Desk Accessories sections
- Depths are available in 36", 48" or 60"
- Available with or without Screen Mounting Holes

Straight Grain only
Widths include 24" – 96" (3" increments)

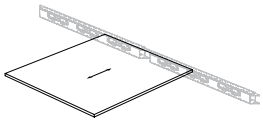

Peninsula Worksurface – Exposed Beam (JNWPSE) or Peninsula Worksurface – Cross Grain – Exposed Beam (JNWPCE) 3

- Can also be used centered over a parallel Double-Sided Beam or in unstructured applications with a Freestanding Peninsula Leg at the end opposite to mandatory beam. For details, refer to the Desk Structures & Desk Accessories sections
- Depths are available in 24", 30" or 36"
- Available with Curved or Standard corner detail

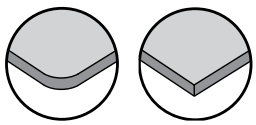

Curved (C) Standard (S)

Straight Grain only
Widths include 48" – 84" (6" increments)

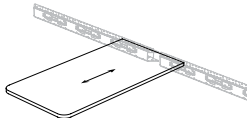

Cross Grain only
Widths include 48" – 60" (6" increments)

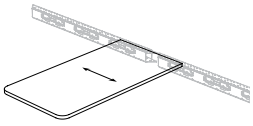

exposed beam worksurface basics (continued)

Expansion Cityline exposed beam Writable Glass Worksurfaces are offered in double-sided and peninsula configurations. They mount off the beam in fully exposed applications.

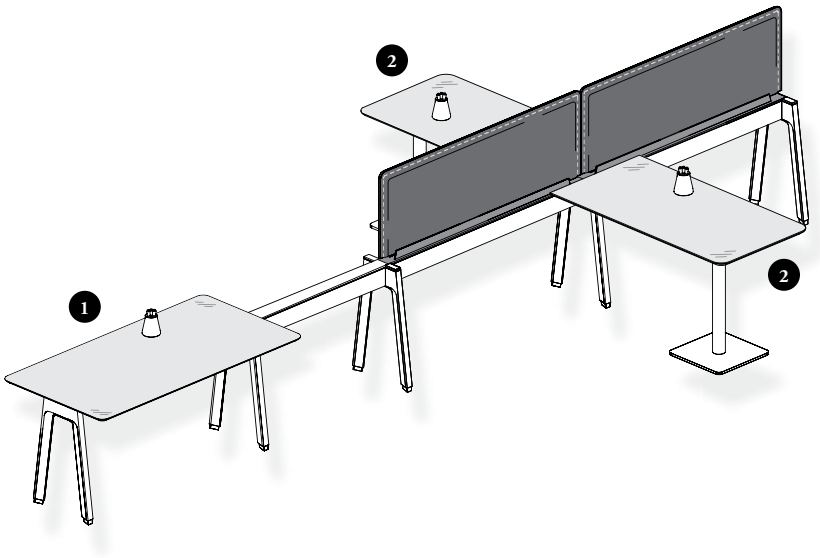

- All dimensions are actual
- Include a back-painted glass top mounted on a metal tapered user edge
- Available with a 5/32" (4 mm) thick tempered glass
- A Table Companion Marker Kit is included with all Writable Glass Worksurfaces
- Accessories can be installed under the worksurfaces. For more details, refer on page 733

Writable Glass Worksurface – Center Beam-Mounted (JNWFG) 1

- Runs parallel on a Double-Sided Structural Beam (JNDBB) or Chicago Structural Beam (JNDCB)
- Available in 38" depth only
- Widths include 48" – 90" (6" increments)

Writable Glass Peninsula Worksurface – Exposed Beam (JNWPGE) 2

- Runs perpendicular to any single- or double-sided Structural Beam (JNDBB) or Chicago Structural Beam (JNDCB)
- Can also be used centered over a parallel Double-Sided Beam or in unstructured applications with a Freestanding Peninsula Leg at the end opposite to beam. For details, refer to the Desk Structures & Desk Accessories sections
- Available in 24", 30" or 36" depths
- Widths include 48" – 84" (6" increments)
- Available with Curved corner detail only
- Availaible with Square Cut-Out (S) only

Curved

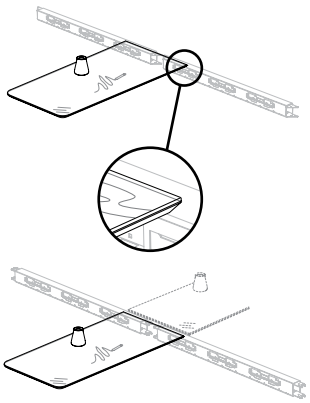

exposed beam worksurface basics (continued)

writable glass worksurface profile

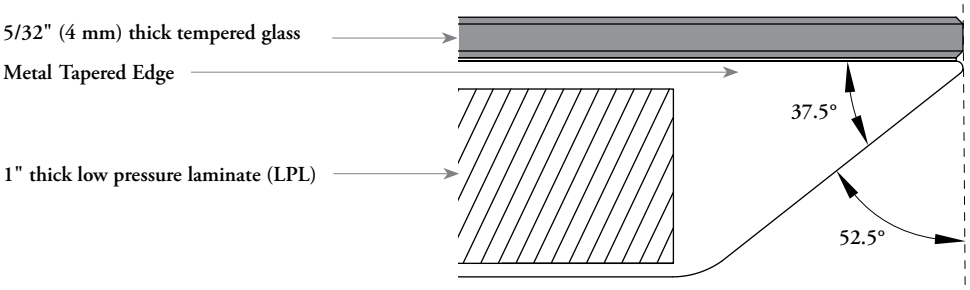

table companion marker kit

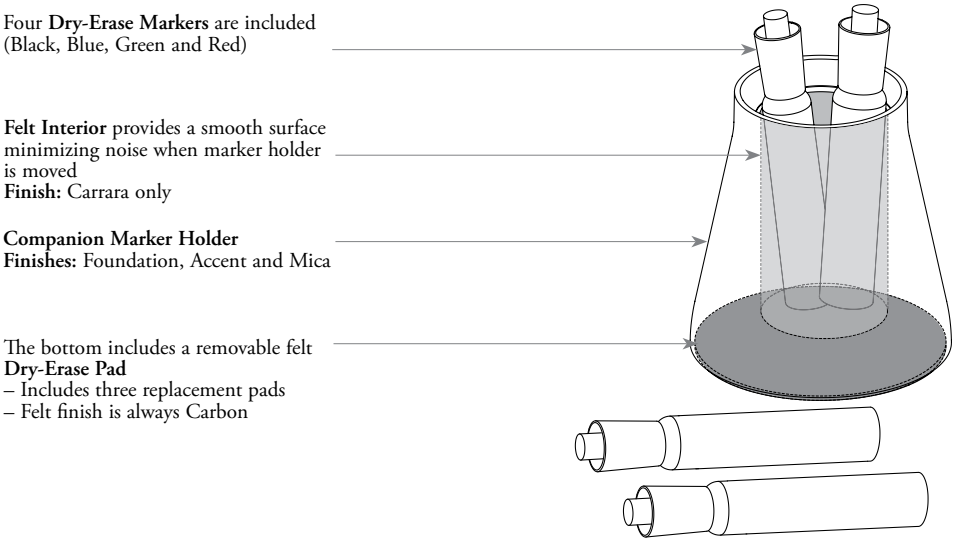

exposed beam worksurface basics (continued)

worksurface dimensions

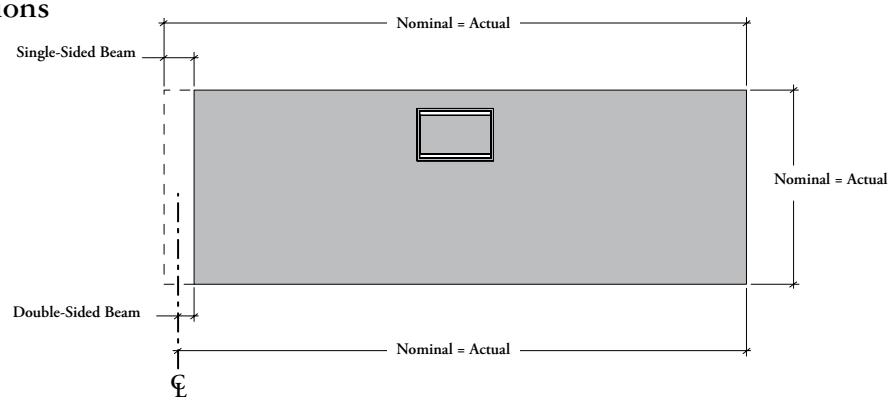

depth

Worksurface depth matches with support depth. Recessed supports can be use in in-line positions only. Refer to the Desk Structures section for details

single-sided worksurface

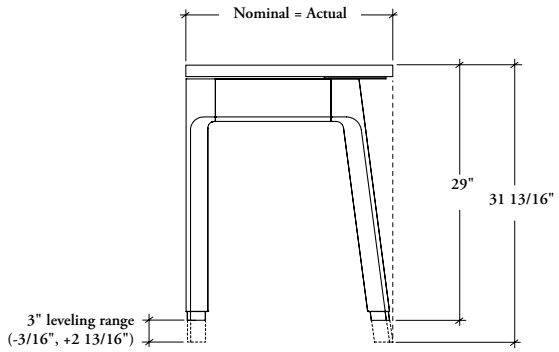

double-sided worksurface

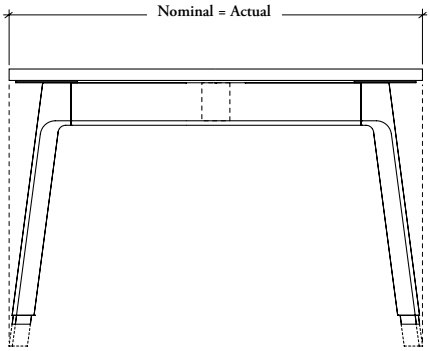

width

Worksurface is actual and can be used in single- or double-sided application

single-sided application

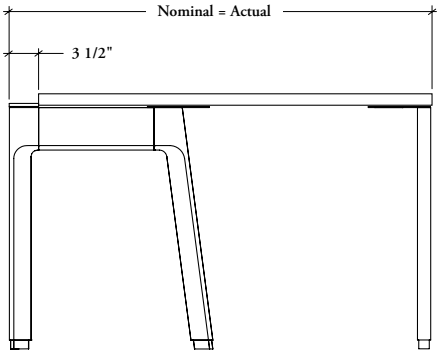

double-sided application

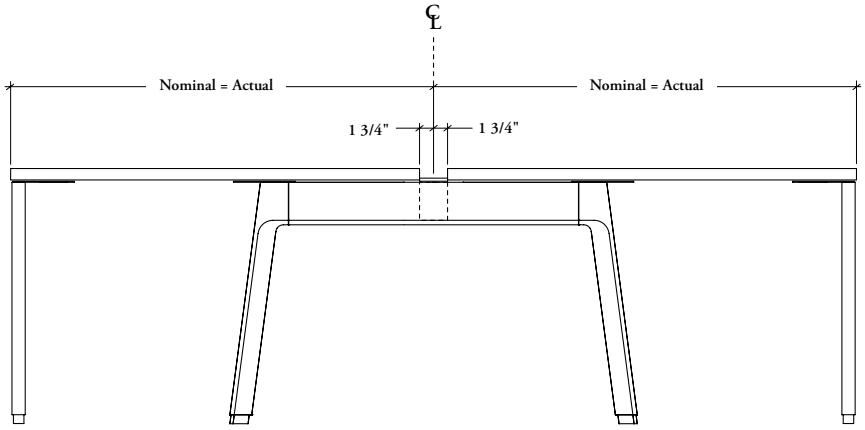

planning with exposed beam worksurfaces

The following should be considered when planning with Expansion Cityline exposed beam worksurfaces.

- Single-Sided Exposed Beam Worksurfaces (JNWRSE, JNWSCE) can be used as structured or unstructured run-offs
- They can be specified on- or off-module on the end opposite to the exposed structural beam

single-sided worksurfaces

	on-module	off-module
freestanding support-mounted	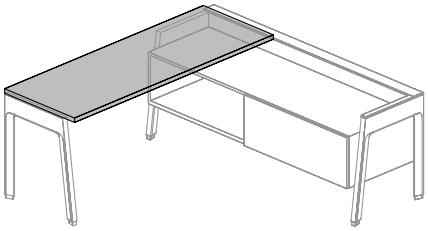	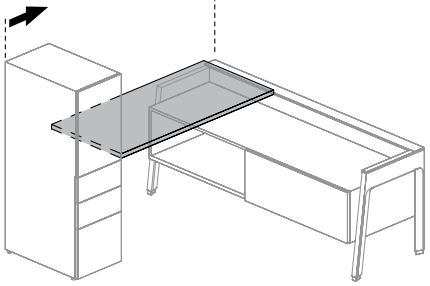
beam-mounted	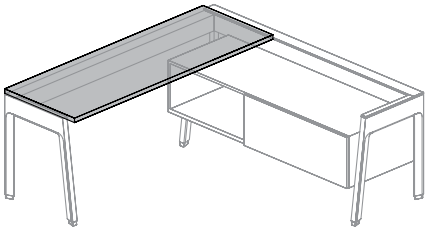	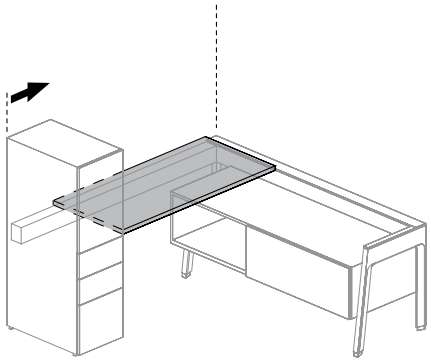
90° beams junction	n/a	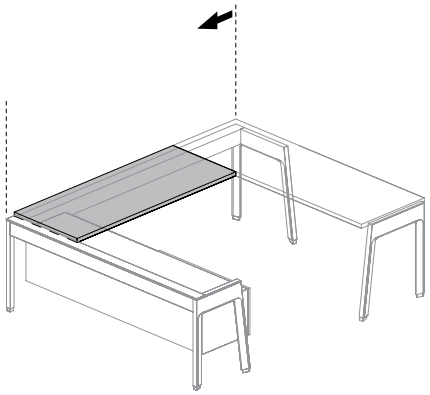
	Nominal	**Nominal minus X = dimension to specify**

Worksurface width can be influenced by more than one product listed below:

– Worksurfaces (JNWSSN, JNWSCN, JNWDSN, JNWDCN, JNWPSN, JNWPCN)
– Beam Towers (JNFBPL, JNFBWF, JNFBS, JNFBG)
– Dual Beam Tower (JNFBDF)
– Beam-Mounted Cabinet (JNBBLO)

planning with exposed beam worksurfaces (continued)

- Double-Sided Exposed Beam Worksurface (JNWDSE) can be used as structured or unstructured run-offs
- They can be specified on- or off-module on the end opposite to the exposed structural beam

double-sided worksurfaces

	on-module	off-module
freestanding support-mounted	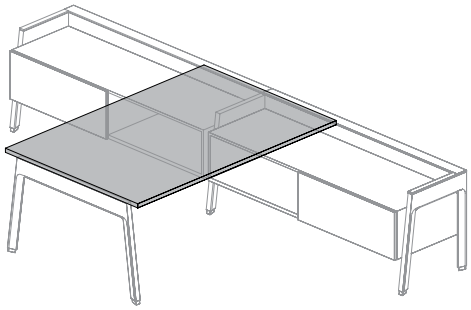	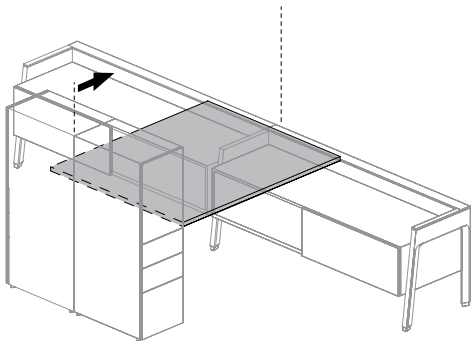
beam-mounted	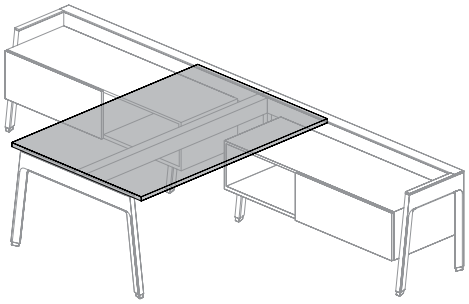	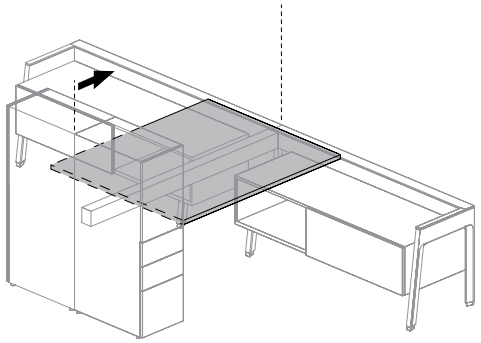
90° beams junction	n/a	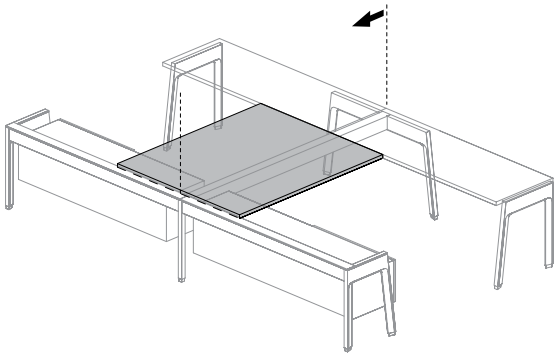
	Nominal	Nominal minus X = dimension to specify

Worksurface width can be influenced by more than one product listed below:

– Worksurfaces (JNWSSN, JNWSCN, JNWDSN, JNWDCN, JNWPSN, JNWPCN)
– Beam Towers (JNFBPL, JNFBWF, JNFBS, JNFBG)
– Dual Beam Tower (JNFBDF)
– Beam-Mounted Cabinet (JNBBLO)

planning with exposed beam worksurfaces (continued)

Exposed Beam Peninsula Worksurfaces (JNWPSE, JNWPCE, JNWPGE) can be used as structured or unstructured run-offs

peninsula worksurfaces

	beam junction	middle of beam
beam-mounted	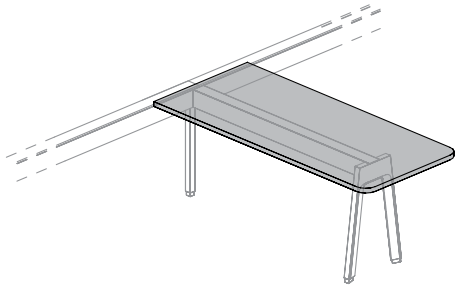	**n/a**
leg-mounted	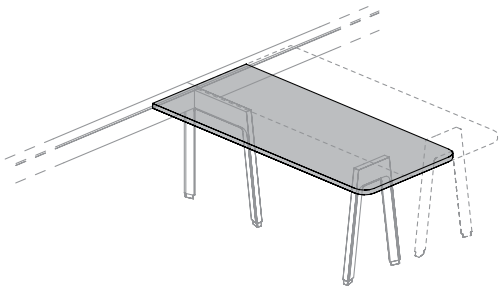	**n/a**
on-module **(Laminate Peninsula Worksurface only)**	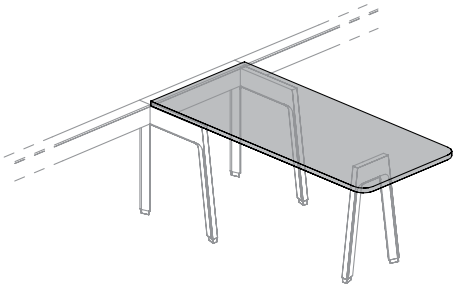	**n/a**
fence	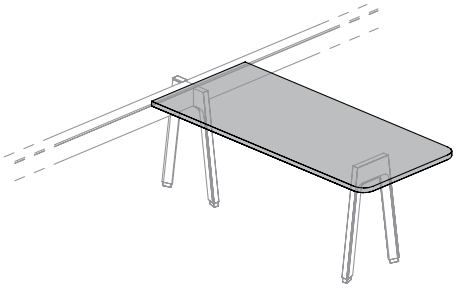	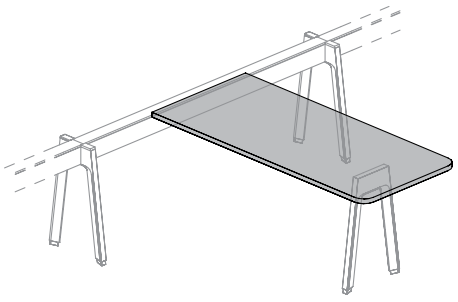

Structural Leg must be centered in the middle of Writable Glass Peninsula Worksurface

Peninsula Worksurfaces can be mounted centered on Double-Sided Beams. Linear planning of Single-Sided Beams needs Suspended or Semi-Suspended Credenzas to allow the use of centered Peninsula Worksurfaces

planning with worksurfaces

The following should be considered when planning with Expansion Cityline worksurfaces.

- Applicable for Single- and Double-Sided Worksurfaces and Peninsulas
- Applicable for standard and exposed beam Worksurfaces
- Worksurfaces **cannot** be used in combination with Freestanding Supports to make freestanding tables

Single-Sided Worksurface **cannot** be combined and mounted on double-sided desk structure. Double-Sided Worksurface must be use in this application

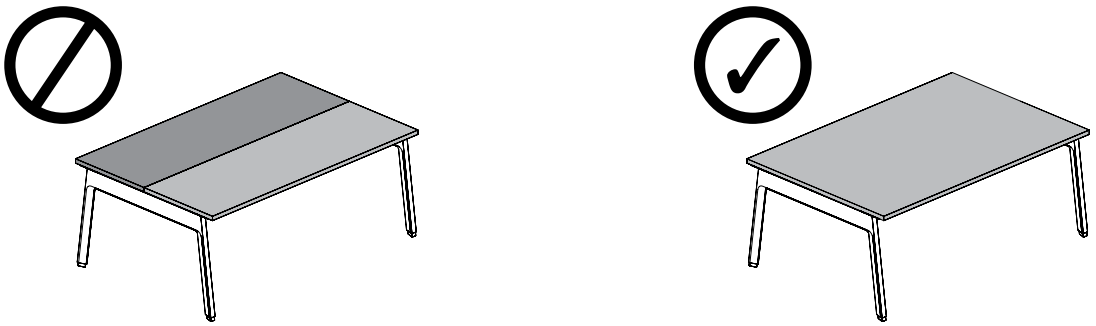

Single-Sided Worksurface **cannot** be used in double-sided desk structure

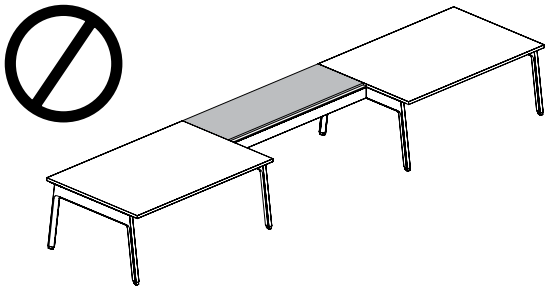

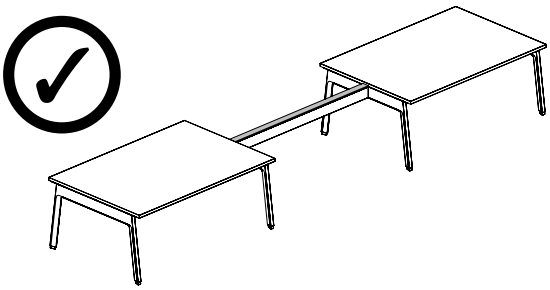

Structural Beam Covers must be used to create collaborative spaces

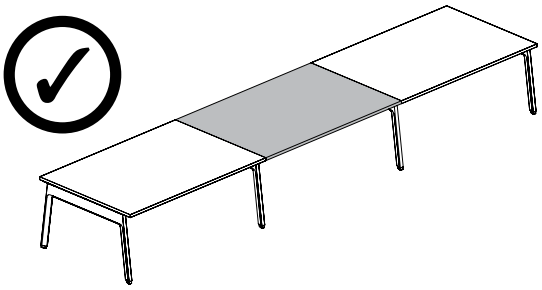

Double-Sided Worksurface must be used to create workstations

Worksurfaces **cannot** exceed the desk structure, except for Peninsula Worksurfaces

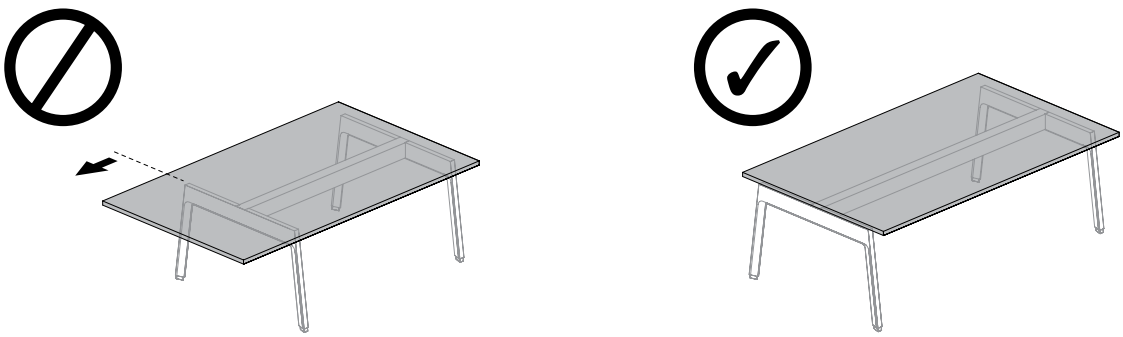

planning with worksurfaces (continued)

The following should be considered when planning with Expansion Cityline Writable Glass Worksurfaces.

- Applicable for all Writable Glass Worksurfaces
- Applicable for standard and exposed beam Writable Glass Worksurfaces
- Writable Glass Worksurfaces **cannot** be used in combination with Freestanding Supports to make freestanding tables

double-sided writable glass worksurface

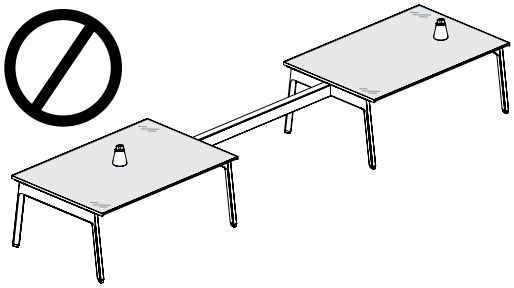

Double-Sided Writable Glass Worksurface **cannot** be used at the end of a worksurface run

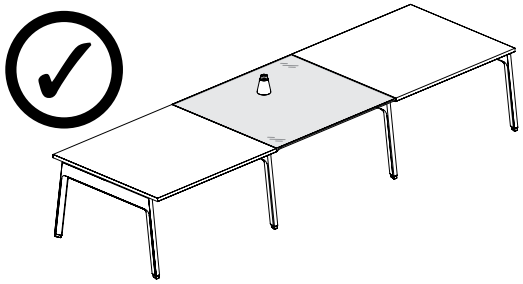

Double-Sided Writable Glass Worksurface (JNWDG) must always be used between two Laminate Double-Sided Worksurfaces to create a workstation

writable glass worksurface – center beam-mounted

Writable Glass Worksurface – Center Beam-Mounted (JNWFG) must be mounted on-module on two Structural Legs – Fence and a Structural Beam

Writable Glass Worksurface – Center Beam-Mounted must be wider the Structural Beam width by 3" to 12" on each side

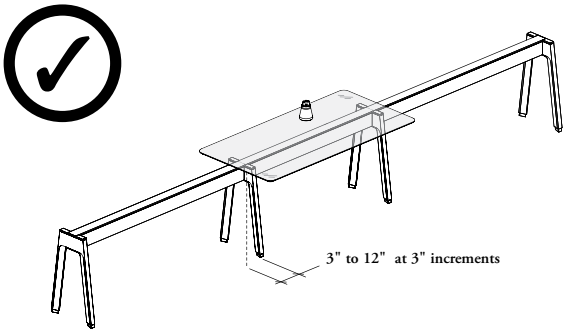

planning with worksurfaces (continued)

Worksurface used with freestanding support **cannot** exceed these widths:

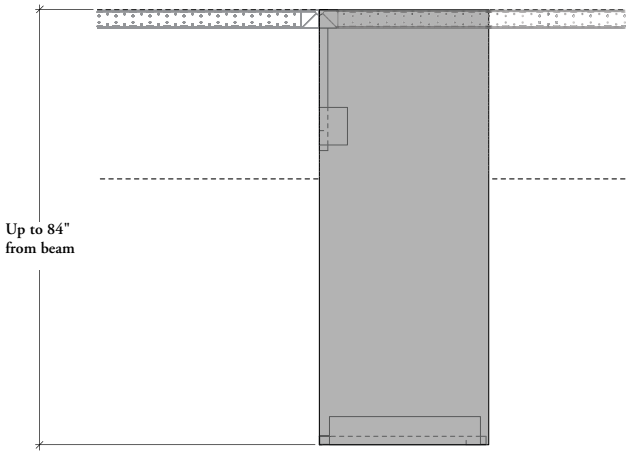

for worksurfaces and peninsula

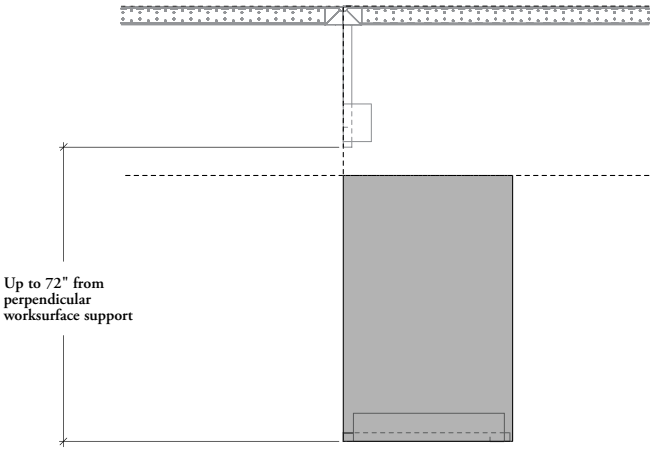

for worksurfaces only

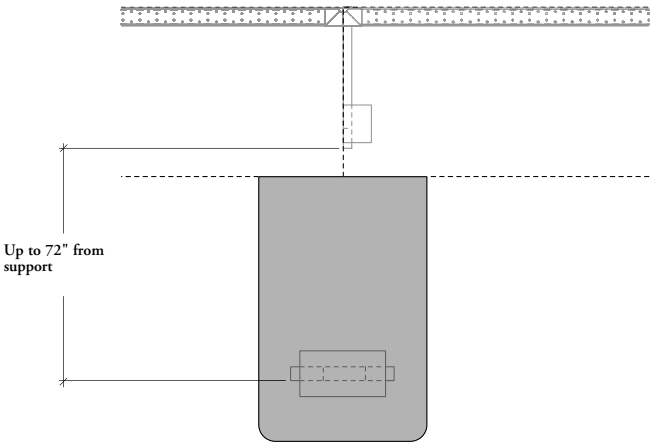

for peninsula only

planning with access doors, grommets & cut-outs

The following should be considered when planning access door, grommet and cut-out positions on Expansion Cityline worksurfaces.

- All worksurfaces are available with factory-made access door and grommet cut-outs
- Provide opening for routing electrical wiring and communication cables through the worksurface

three styles available:

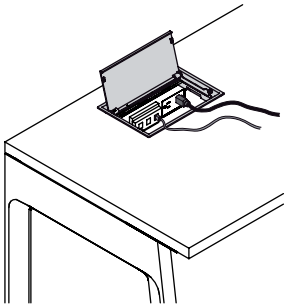

Access Door

- Can be located to the center, to the left or to the right of each worksurface. Can also be offset left or offset right on double-sided worksurfaces. Can be combined with Rectangular Grommet
- Allows direct access to power/data under the worksurface. Can also be specified separately. For details, refer to the Lighting, Electrics & Communications section
- Pivoting door provides two access for cables: on back for permanent devices and in front for daily use cables

Finishes: Foundation, Mica and Accent

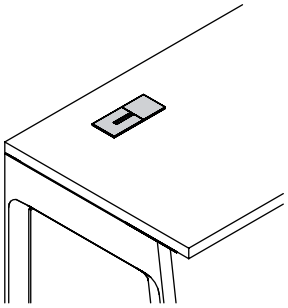

Rectangular Grommet

- Can be centered or at both ends of each worksurface. Can be combined with Access Door
- Complements MAST Manual Arm with Expansion Grommet Mount (YMSTM_5), Dynamic Arm (YMSTD_5) or Dynamic Arm Light (YMSTX_5) can be installed through the hole of the Rectangular Grommet. For details, refer to Complements products

Finishes: Foundation, Mica and Accent

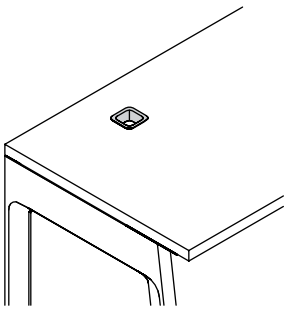

Square Cut-Out

- Combined with Rectangular Grommet located to the center, Square Cut-Out can be located to the left or to the right of each worksurface. Can also be offset left or offset right on double-sided worksurfaces
- Allows installation of Dual or Quad Power Qube (JNEPC) for a direct access to power/data and or USB charger ports above the worksurface. For details, refer to the Lighting, Electrics & Communications section

Finish: Square Cut-Out comes with grommet ring and comes in a Coordinate Soft Gris only

planning with access doors, grommets & cut-outs (continued)

The following should be considered when planning access door, grommet and cut-out positions on worksurfaces mounted on a Structural Beam.

- The Access Door position offering is based on the Structural Beam (JNDBB) or Chicago Structural Beam (JNDCB) power location which varies depending on width. Refer to Desk Structures section for details
- Access door, grommet and square cut-out positions are not all available depending of worksurface dimensions; see individual product pages for details

single-sided worksurfaces

All positions are referenced from the nominal dimension of worksurfaces except End Access Door on Beam Exposed Worksurfaces which moves inward of the exposed beam reduction value

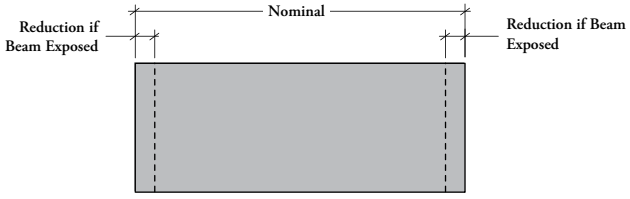

None (NN)

Access Door Positions

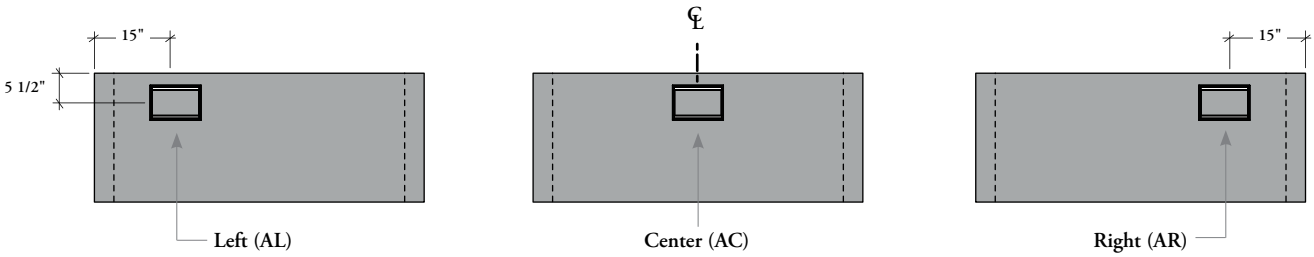

Access Door/Grommet Positions

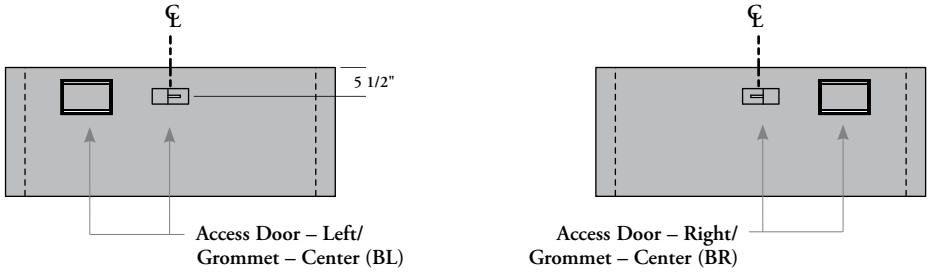

planning with access doors, grommets & cut-outs (continued)

single-sided worksurfaces (continued)

All positions are referenced from the nominal dimension of worksurfaces except End Access Door on Beam Exposed Worksurfaces which move inward of the exposed beam reduction value

End Access Door/Grommet Positions

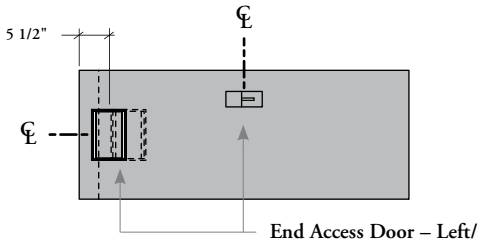

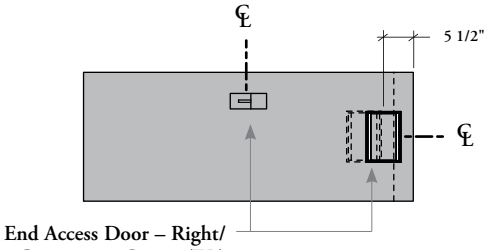

Grommet Positions

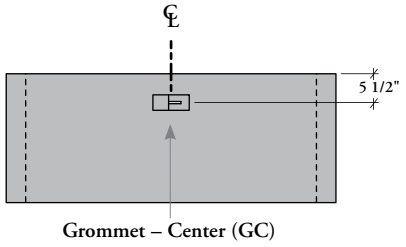

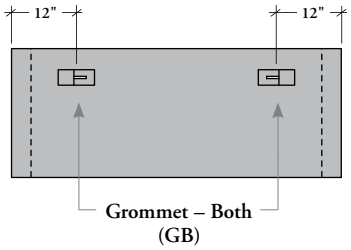

Square Cut-Out/Grommet Positions

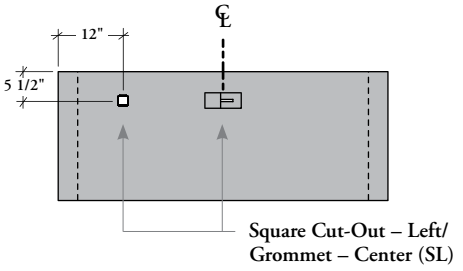

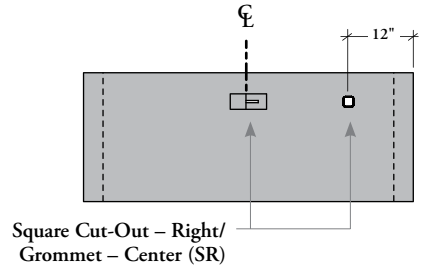

planning with access doors, grommets & cut-outs (continued)

double-sided worksurfaces

All positions are referenced from the nominal dimension of worksurfaces except End Access Door on Beam Exposed Worksurfaces which moves inward of the exposed beam reduction value

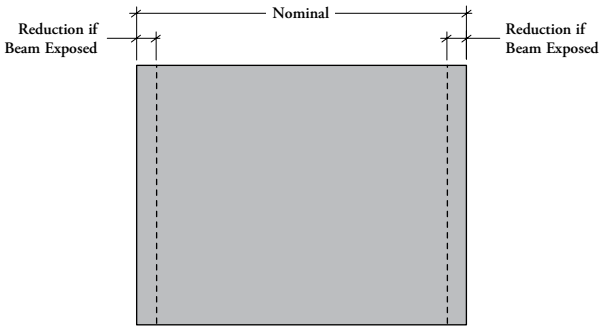

None (NN)

Access Door Positions

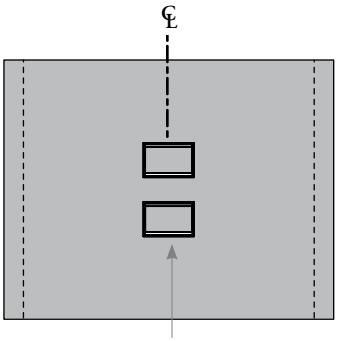

Center (AC)

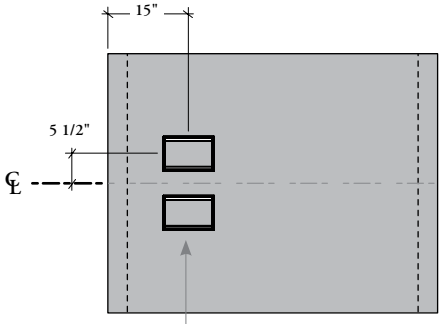

Justified (AJ)

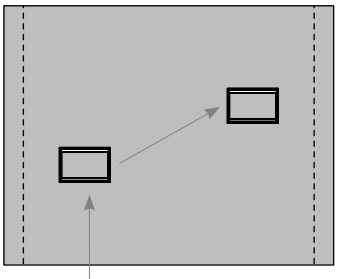

Offset Left (AL)

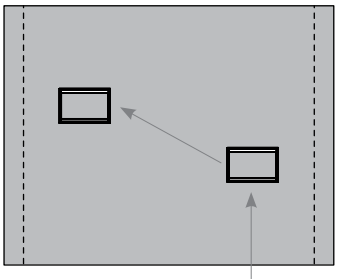

Offset Right (AR)

planning with access doors, grommets & cut-outs (continued)

double-sided worksurfaces (continued)

All positions are referenced from the nominal dimension of worksurfaces except End Access Door on Beam Exposed Worksurfaces which moves inward of the exposed beam reduction value

Access Door/Grommet Positions

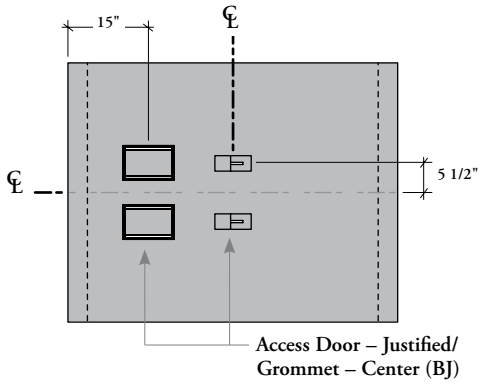

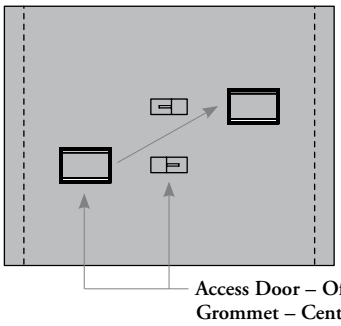

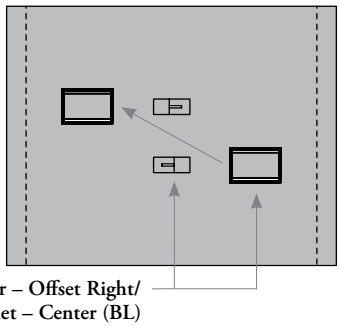

End Access Door/Grommet Positions

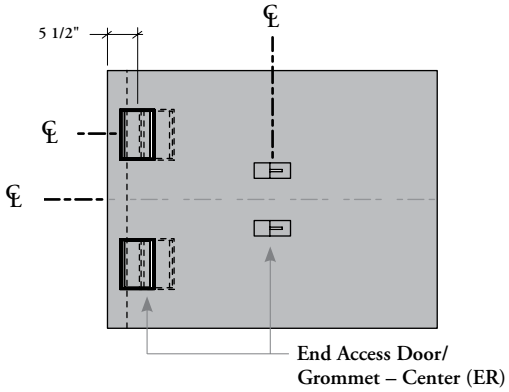

planning with access doors, grommets & cut-outs (continued)

double-sided worksurfaces (continued)

All positions are referenced from the nominal dimension of worksurfaces except End Access Door on Beam Exposed Worksurfaces which moves inward of the exposed beam reduction value

Grommet Positions

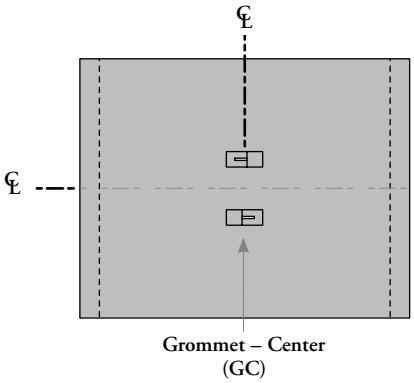

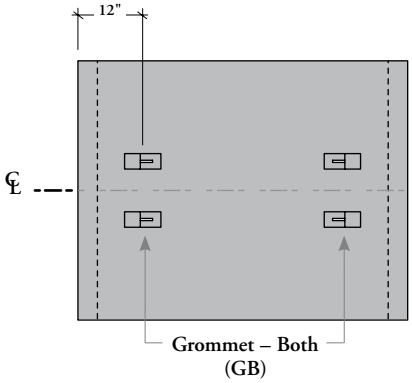

Square Cut-Out/Grommet Positions

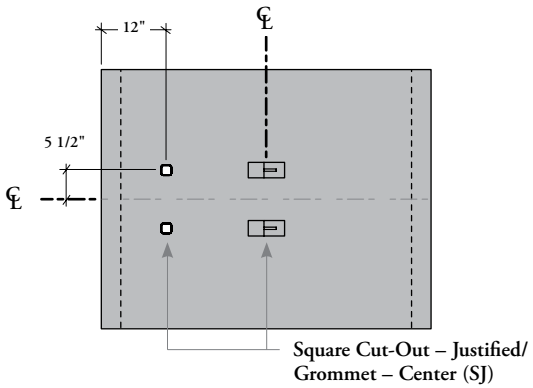

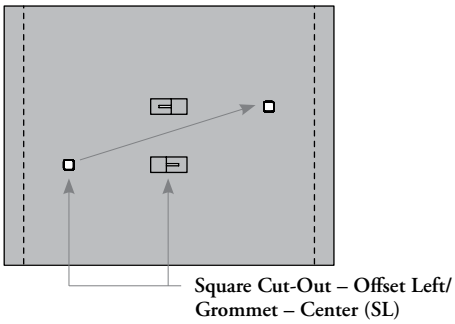

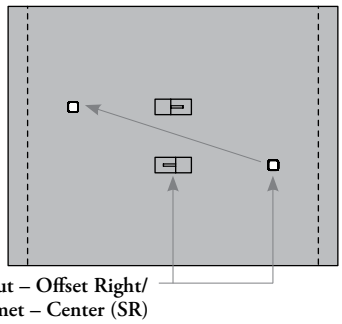

planning with access doors, grommets & cut-outs (continued)

laminate peninsula & writable glass peninsula worksurfaces

All positions are referenced from the nominal dimension for Standard Worksurfaces and all positions move inward of the exposed beam reduction value on Beam Exposed Worksurfaces

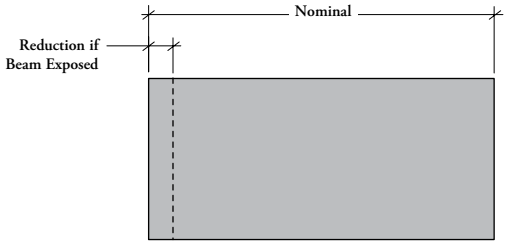

None (NN)

Access Door Positions

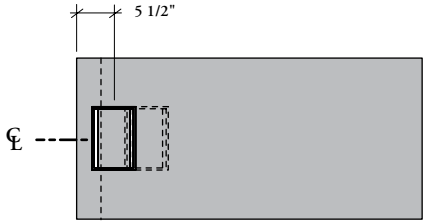

Access Door (A)

Grommet Positions

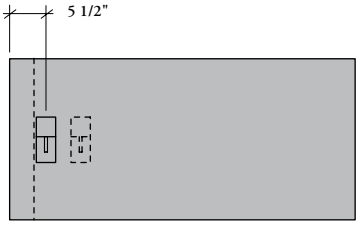

Grommet (G)

Square Cut-Out Positions

Only square cut-out is available with Wrtitable Glass Peninsula Worksurfaces

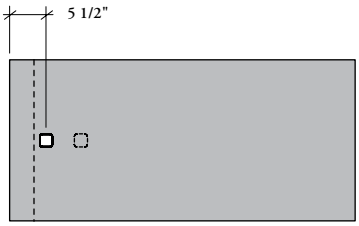

Square Cut-Out (S)

planning with access doors, grommets & cut-outs (continued)

The following should be considered when planning access door, grommet and cut-out positions on worksurfaces mounted on a structural beam.

- The Access Door position offering is based on the Structural Beam (JNDBB) or Chicago Structural Beam (JNDCB) power location which varies depending on width. Refer to Desk Structures section for details
- The illustrated applications below are applicable on single- and double-sided worksurfaces
- The access door positions on a worksurface that is mounted off-module with a structural beam will not all be related to the power positions on beam
- Other conflicts are possible with storage mounted on worksurface. Refer to Mounted Storage section for details

on-module application

Access Door is always aligned with structural beam power position when used in on-module application

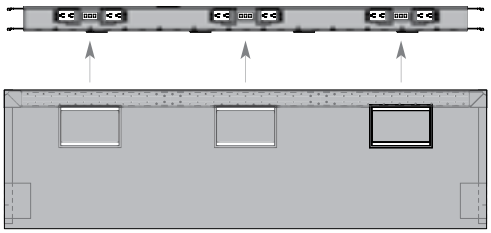

off-module with return application

- Only Access Door in opposite position of return (left shown) is aligned with structural beam power position when used with return
- Access Door in end position can be used on return to be aligned with structural beam power position

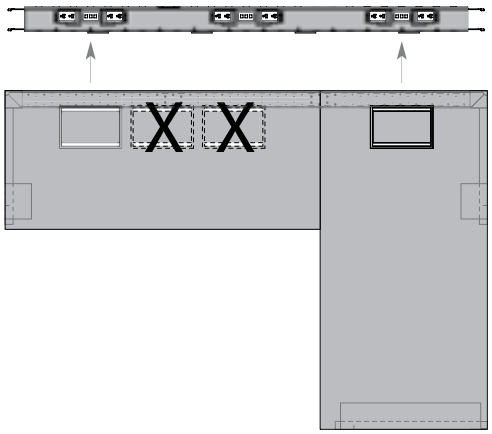

off-module with tower application

Only Access Door in opposite position of tower (right shown) is aligned with structural beam power position when used off-module with tower

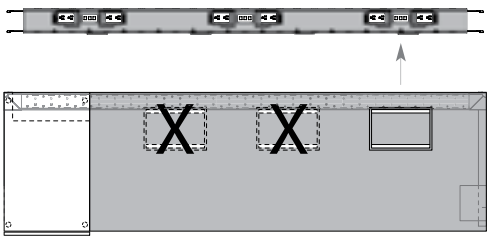

planning with access doors, grommets & cut-outs (continued)

off-module with return and storage application

- Access door positions are **not** aligned with structural beam power positions when used with return and storage
- Access Door in end position can be used on return to be aligned with structural beam power positions

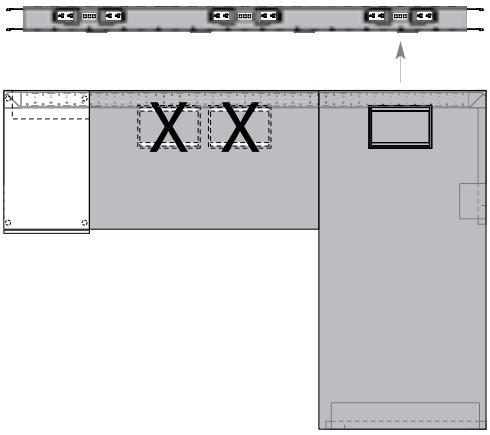

return application

- End Access Door is not always perfectly aligned with structural beam power position depending on the worksurface depth when used in return application. The resulting 3" offset on 24" and 48" wide worksurfaces still allows the access to power on beam
- The illustrated applications below are also applicable respectively on 48" and 60" deep double-sided worksurfaces

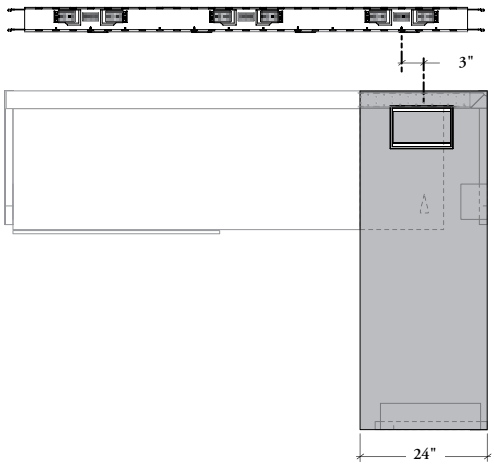

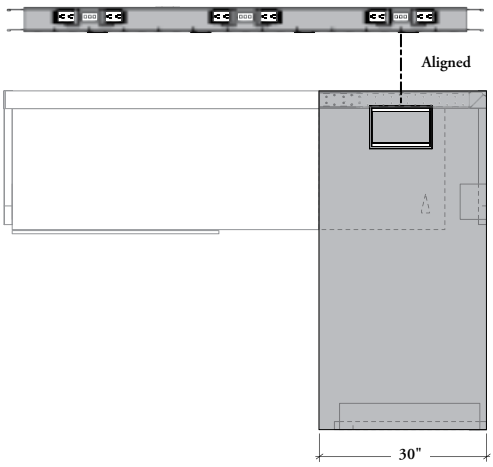

planning with access doors, grommets & cut-outs (continued)

90" wide rectangular worksurfaces

Access Door is only aligned with 48" wide structural beam power position

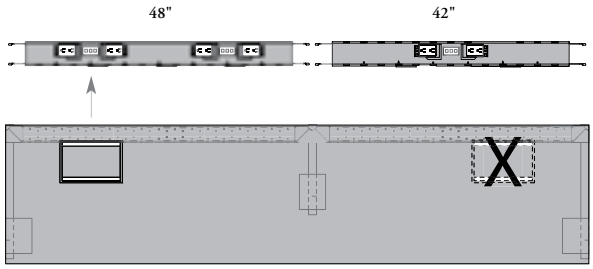

96" wide rectangular worksurfaces

Access Door can be aligned with both 48" wide structural beam power position

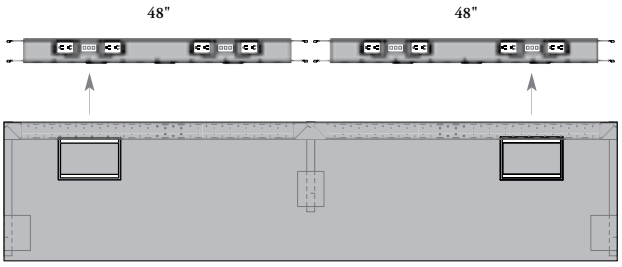

planning with access doors, grommets & cut-outs (continued)

The following should be considered when planning Access Door, grommet and cut-out position on peninsula worksurface.

laminate peninsula worksurfaces only

beam-mounted peninsula

Access Door, grommet and cut-out **cannot** be used when Peninsula Worksurface is beam-mounted

Access Door

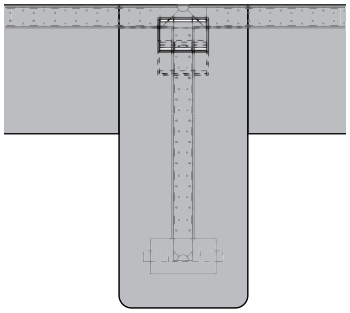

Rectangular Grommet

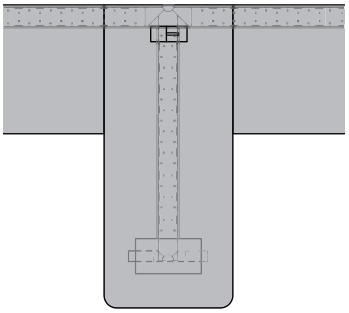

Square Cut-Out

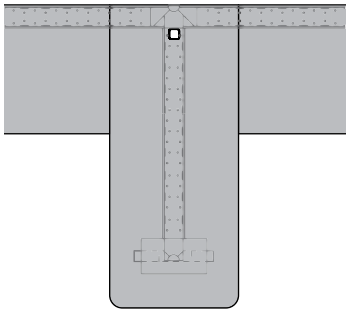

freestanding peninsula – mounted over a structural support

Access Door, grommet and cut-out **cannot** be used when Peninsula Worksurface is mounted centered over a structural support

Access Door

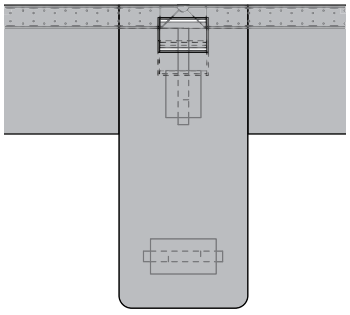

Rectangular Grommet

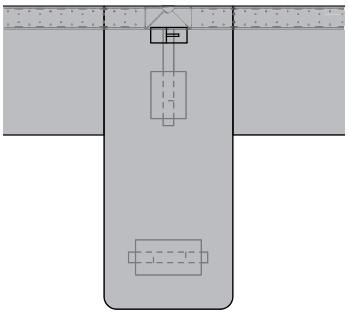

Square Cut-Out

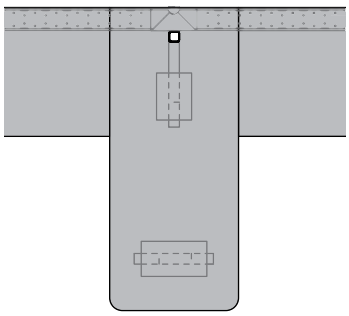

freestanding peninsula – perpendicular beam-mounted

Access Door, grommet and cut-out can be used when Peninsula Worksurface is mounted between two structural supports

Access Door

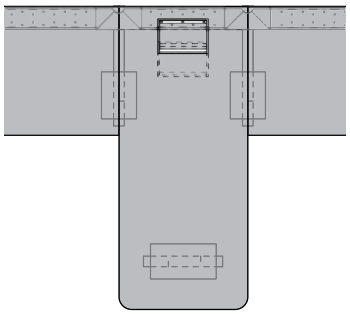

Rectangular Grommet

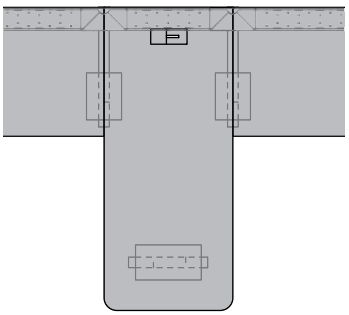

Square Cut-Out

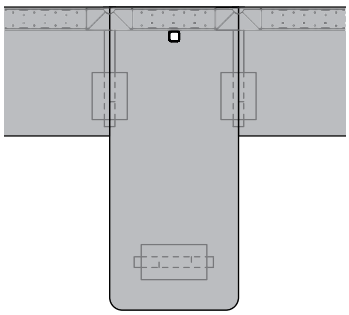

planning with access doors, grommet & cut-outs (continued)

laminate peninsula & writable glass peninsula worksurfaces

freestanding peninsula – worksurface attached

Grommet and cut-out can be used when Peninsula Worksurface is worksurface attached

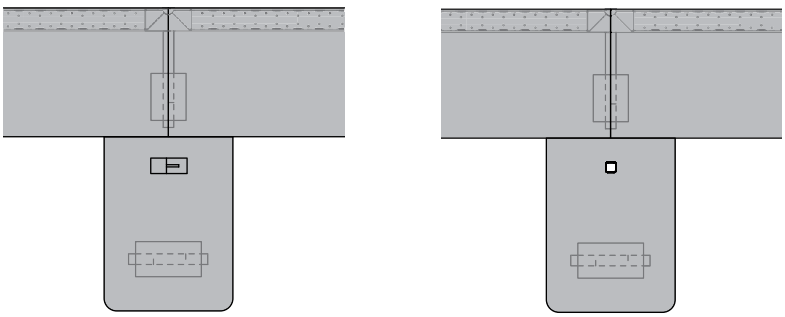

freestanding peninsula – fence application

- Grommet and cut-out **cannot** be used when Peninsula Worksurface is mounted over a fence leg
- Grommet and cut-out can be used when Peninsula Worksurface – Exposed Beam is mounted over a fence leg

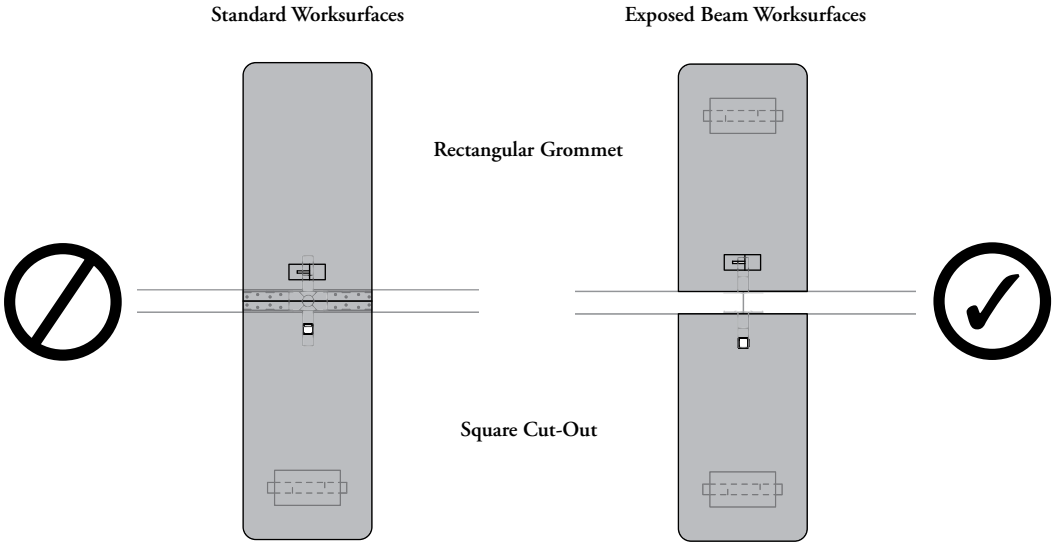

planning screen mounting holes

The following should be considered when planning Add-On Screen on Expansion Cityline worksurfaces.

- Screen mounting holes option ensure good positionning of Add-On Screen on worksurfaces
- Add-On Screen must be specified according to application. Refer to the Workstation Screens section

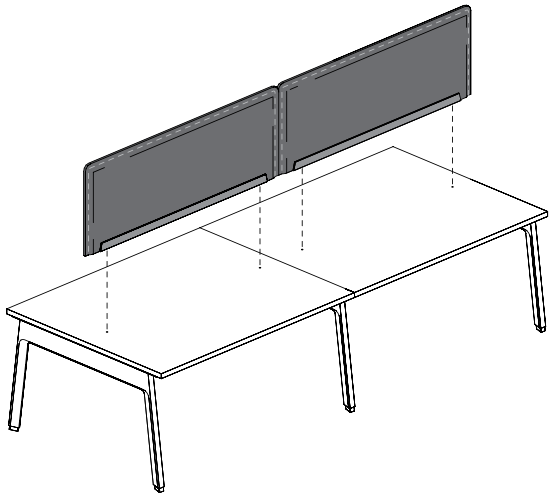

standard worksurfaces

Single-Sided

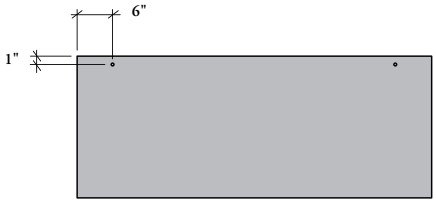

Double-Sided

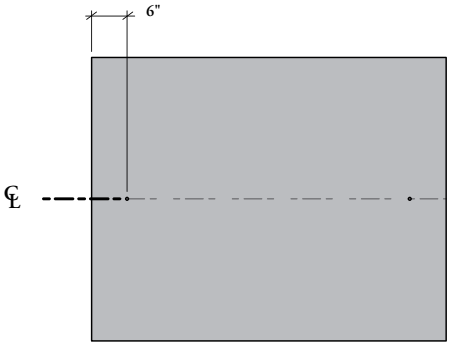

exposed beam worksurfaces – single-beam

Single-Sided

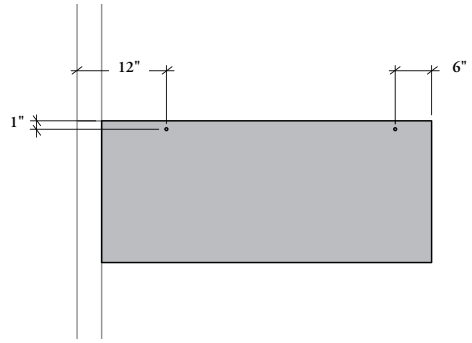

Double-Sided

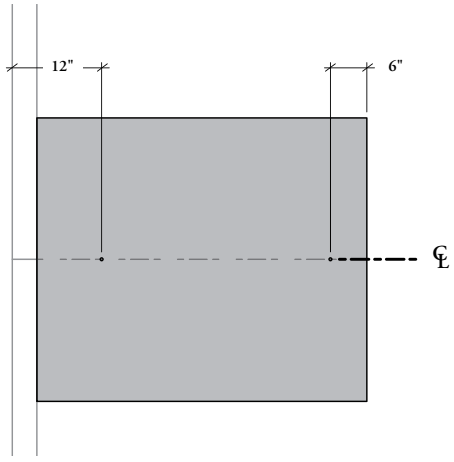

planning with screen mounting holes (continued)

exposed beam worksurfaces – double-beam

Single-Sided

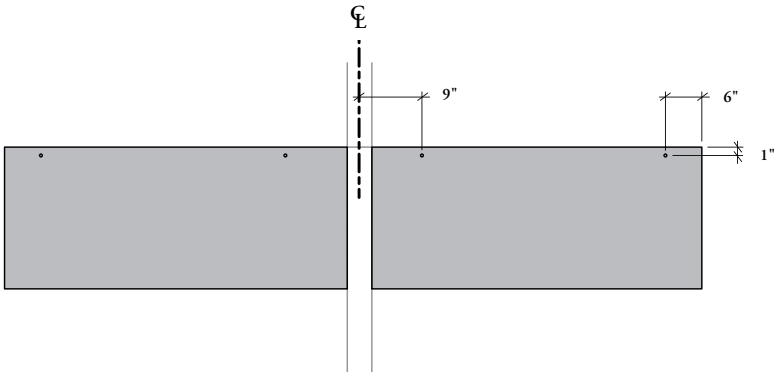

Double-Sided

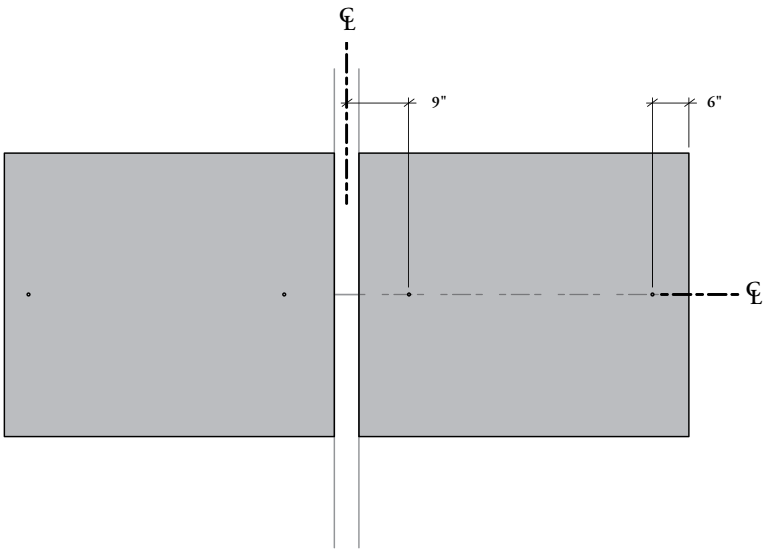

peninsula worksurfaces

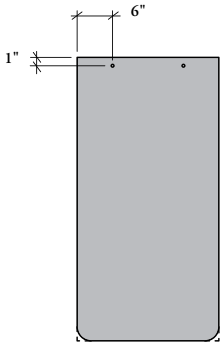

high peninsula worksurface basics

High Peninsula Worksurfaces are used to facilitate collaboration at standing height position.

Peninsula Monopod Base – Round is **not** included with High Peninsula Worksurface. Refer to Desk Accessories section

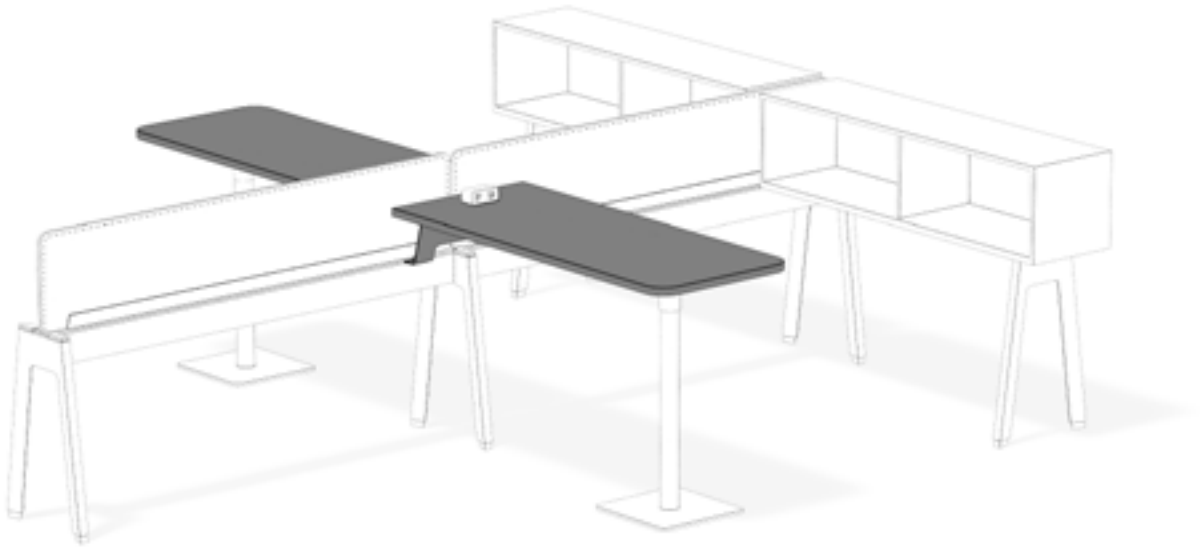

Finishes
Worksurface: Foundation Laminate
Edge Trim Styles: Flat Trim (1.5 mm) and/or Straight Trim (3 mm)
Edge Trim Finishes: Edge Trim colors
Mounting Bracket: Foundation, Mica and Accent

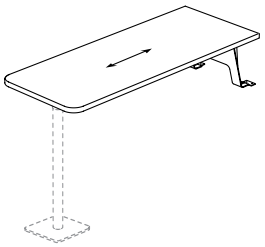

High Peninsula Worksurface (JNWPH)

- Mounted perpendicular to a single- or double-sided desk structure with Peninsula Monopod Base – Round (JNAPP) at one end. For details, refer to Desk Accessories sections
- Depth dimensions are actual, width dimensions are nominals
- Depths are available in 24", 30" or 36"
- Widths include 48" – 84" (6" increments)
- Height are available in 36" or 42"
- Available with Curved or Standard corner detail
- User edge trim style can be Straight Trim (3 mm) or Flat Trim (1.5 mm)
- Available in straight grain only
- Available Rectangular Grommet or Square Cut-Out
- A Cable Tray is included when a Rectangular Grommet and Square Cut-Out is specified

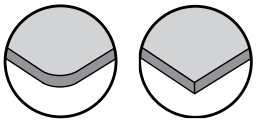

Curved (C) **Standard (S)**

high peninsula worksurface basics (continued)

high peninsula worksurface

1. Peninsula Worksurfaces provide shared meeting spaces within a workstation or a fence application
2. Peninsula Worksurface Bracket is beam-mounted and support one end of peninsula
3. Rectangular Grommet can be specified to provide opening for routing electrical wiring and communication cables through the worksurface or Square Cut-Out (shown) for Power Qube (JNEPC) installation

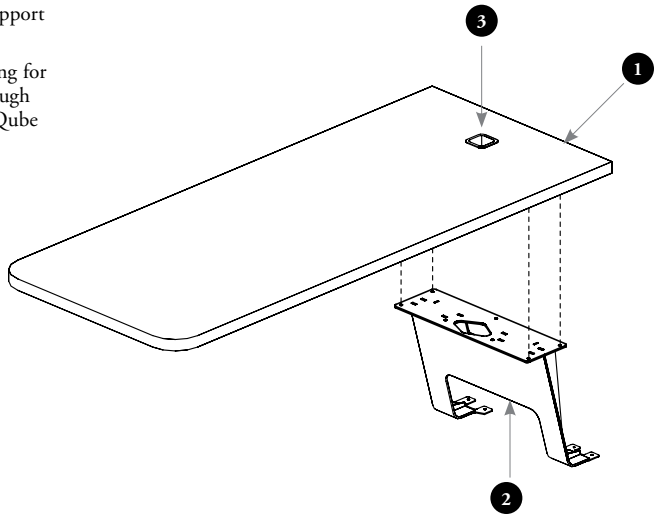

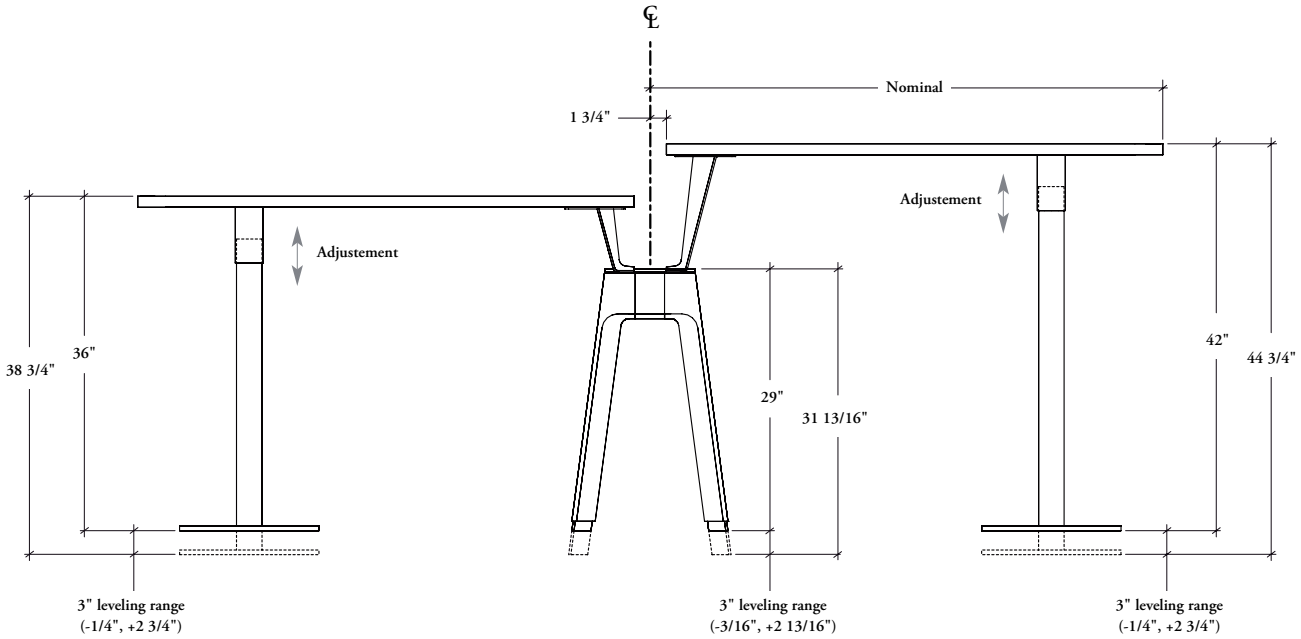

planning with high peninsula worksurface

The following should be considered when planning High Peninsula Worksurface on workstation and fence application.

peninsula monopod base – round position

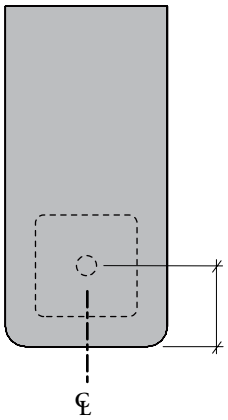

Worksurface Depth	Peninsula Monopod Base – Round Position
24"	12"
30"	15"
36"	18"

grommet & square cut-out

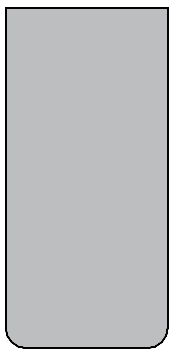

None (N)

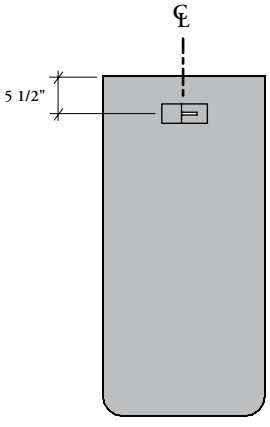

Grommet (G)

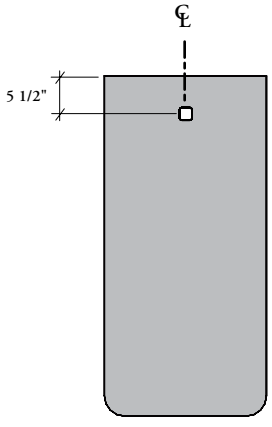

Square Cut-Out (S)

planning with high peninsula worksurface (continued)

- Applicable for Single- and Double-Sided Desk Structure
- Applicable for workstation and fence applications

over a leg

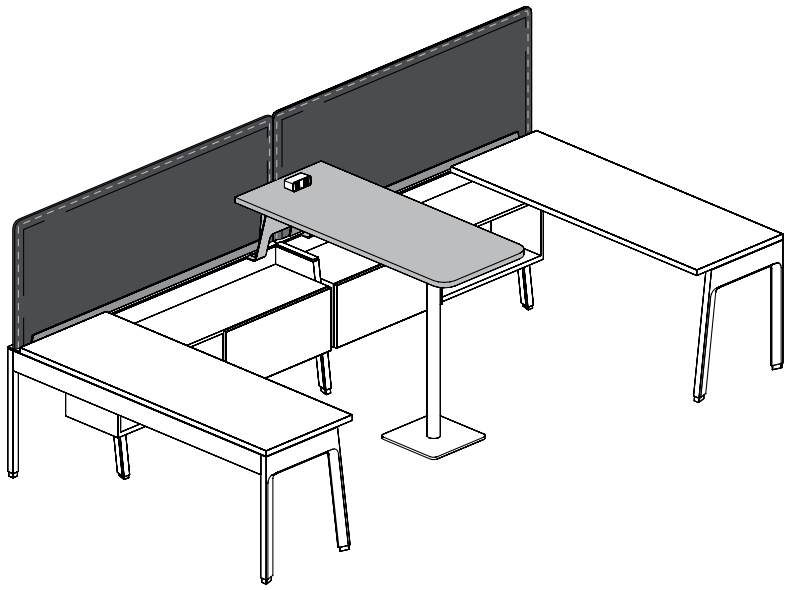

centered on beam

The beam must be at least 30" wide for this application

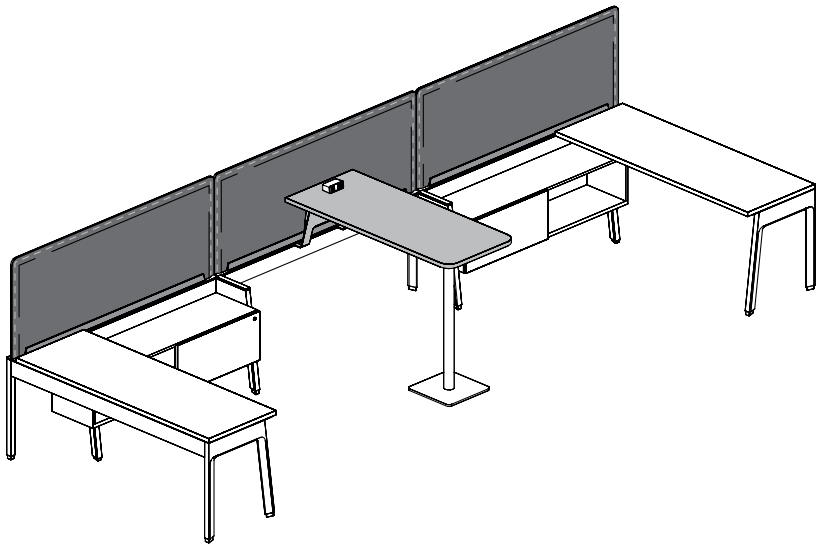

grain/pattern direction – worksurfaces

Attention to grain/pattern direction is important when planning worksurface.

- Grain direction is an important factor when planning workstation, if a different grain direction is required, please contact Teknion Customer Service Representative
- The pattern direction is **not** centered and grain direction can appear in different orientation from side-to-side worksurface
- Shading indicate user edge

worksurface grain/pattern direction and user edges

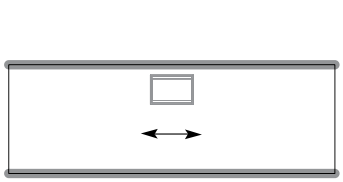

JNWSSD, JNWRSE

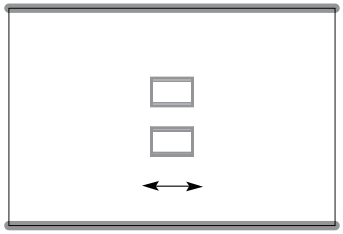

JNWDSN, JNWDSE

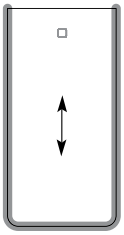

JNWPSN, JNWPSE, JNWPH

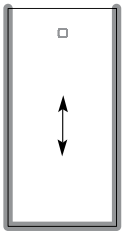

JNWPSN, JNWPSE, JNWPH

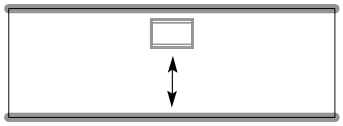

JNWSCN, JNWSCE

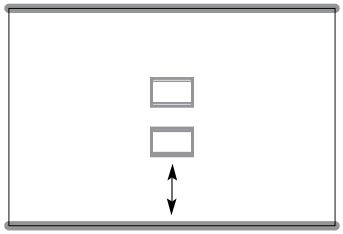

JNWDCN

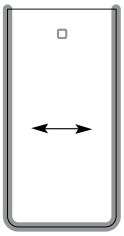

JNWPCN, JNWPCE

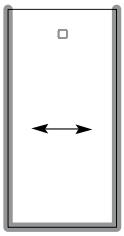

JNWPCN, JNWPCE

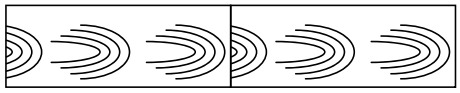

Laminate = = Grain Direction =

edges

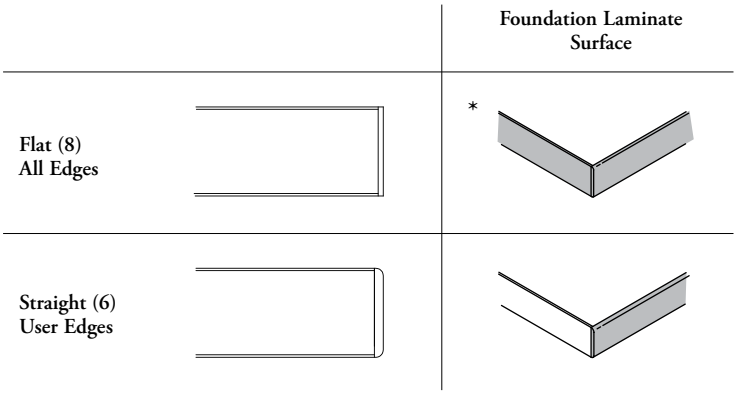

* **Not** available when Curved Corner Detail (C) is specified on Peninsula Worksurfaces (JNWPSN, JNWPSE, JNWPCN, JNWPCE, JNWPH)

grain/pattern direction – worksurfaces (continued)

user edges for writable glass worksurfaces

JNWGD

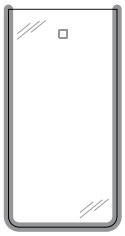

JNWPGN, JNWPGE

JNWFG

metal tapered edge

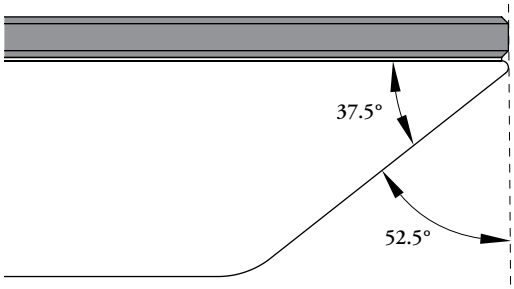

Metal Tapered Edge are finished in Foundation, Accent or Mica

Only available with Curved Corner Detail on Writable Glass Peninsula Worksurfaces (JNWPGN, JNWPGE) and Writable Glass Worksurface – Center Beam-Mounted (JNWFG)

worksurface bracket basics

Expansion Cityline worksurface brackets are offer to fix a worksurface on a beam, reinforce a worksurface and link worksurfaces together.

- Worksurface Reinforcing Channel (JNWRC) are **not** included with worksurface and must be specify seperatly
- Beam-Mounted Worksurface Brackets (JNWBB) are included on Structural Beams (JNDBB) or Chicago Structural Beam (JNDCB) and are used for product reconfiguration
- Linking Plates (JNWFP) are included on all worksurfaces and are used for product reconfiguration

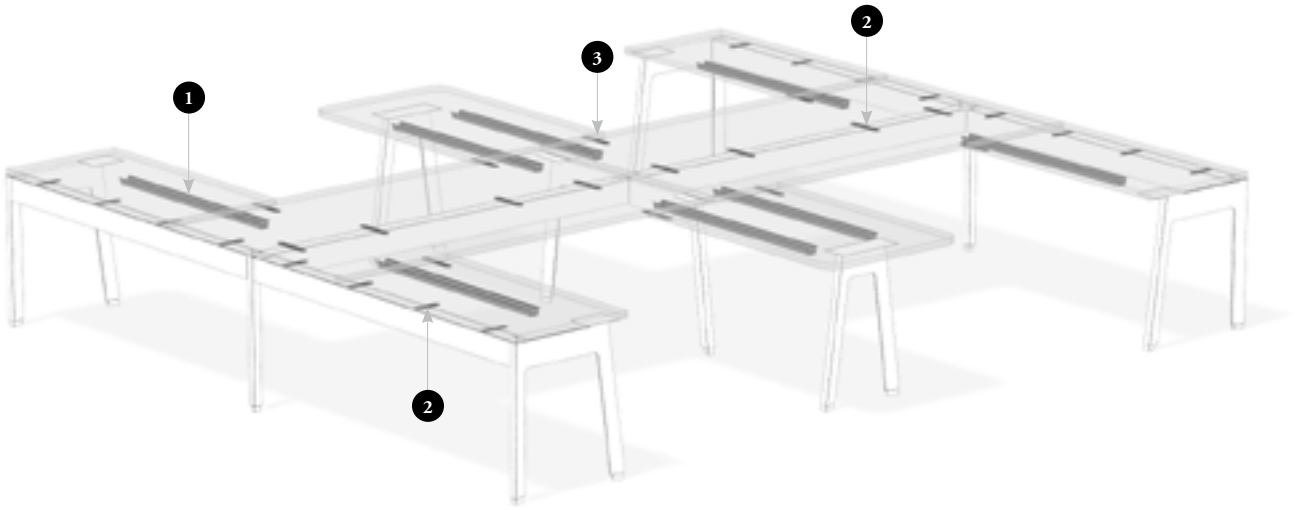

Finishes

Worksurface Reinforcing Channel: Ebony (52)
Beam-Mounted Worksurface Brackets: Ebony (52)
Linking Plates: Ebony (52)

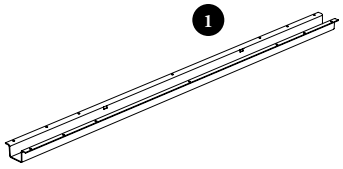

Worksurface Reinforcing Channel (JNWRC)

- Runs parallel under a worksurface to provide additional structure
- All dimensions are nominal
- Widths include 30" – 84" (6" increments)

Beam-Mounted Worksurface Brackets (JNWBB)

- Used to mount a worksurface on beam
- Configuration available for single- or double-sided

Linking Plates (JNWFP)

Used to link one end of worksurface to an other one

planning with worksurface bracket

The following should be considered when planning Worksurfaces.

- Beam-mounted Worksurfaces, except Peninsula Worksurfaces, require Worksurface Reinforcement Channel (JNWRC) when the width is 72" or more
- To optimize worksurface structure, it is recommended to use the specification software to specify the widest channel possible. However, it is recommended to keep a 15" clearance on one side to allow the future addition of a pedestal or casual drawer

beam-mounted worksurfaces

Single-Sided Worksurface

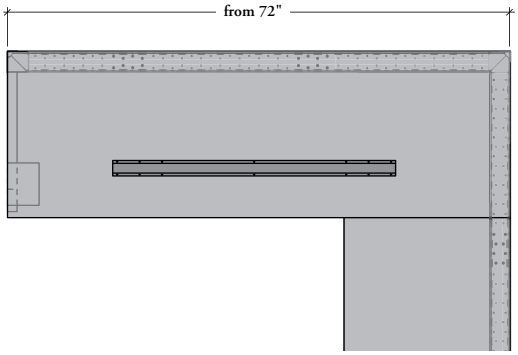

Double-Sided Worksurface

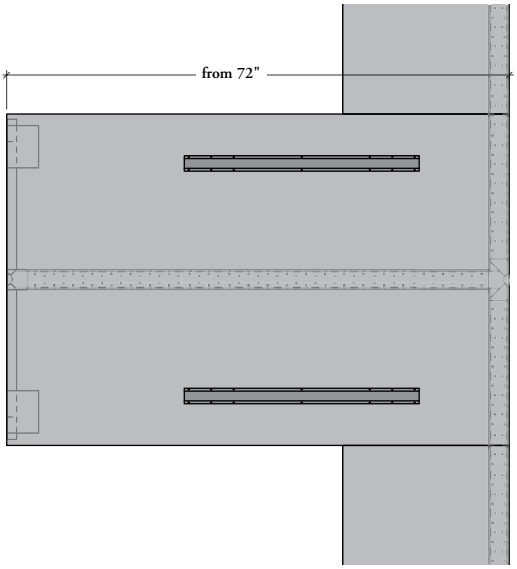

Peninsula Worksurface

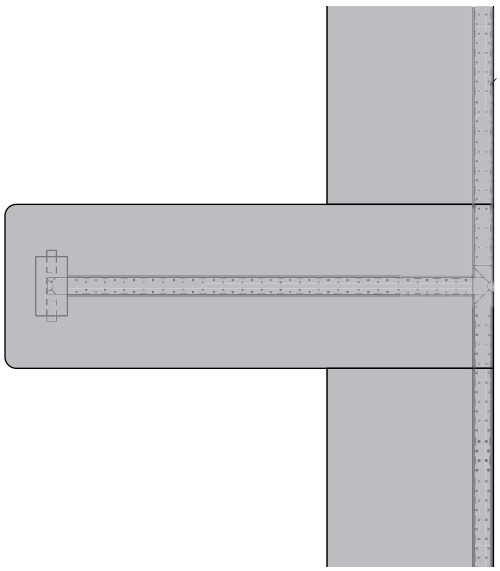

No Reinforcing Channel required

planning with worksurface brackets (continued)

- Unstructured Worksurfaces require Worksurface Reinforcement Channel (JNWRC) from a specific dimension shown below
- To optimize worksurface structure, it is recommended to use the specification software to specify the widest channel possible. However, it is recommended to keep a 15" clearance on one side to allow the future addition of a pedestal or casual drawer

unstructured worksurfaces

Single-Sided Worksurface

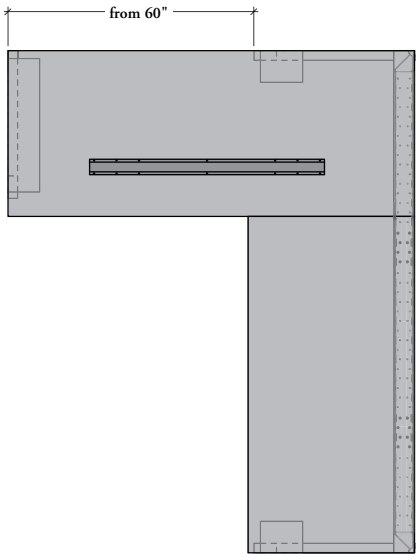

Double-Sided Worksurface

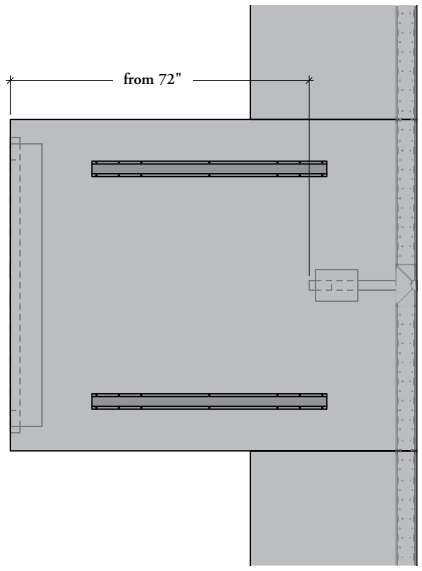

Laminate Peninsula Worksurface and Writable Glass Peninsula Worksurface

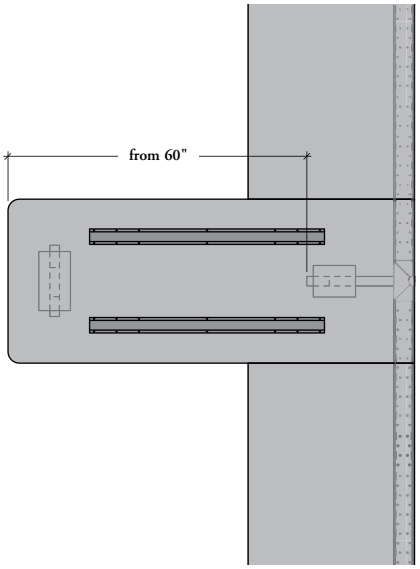

Workstation Application

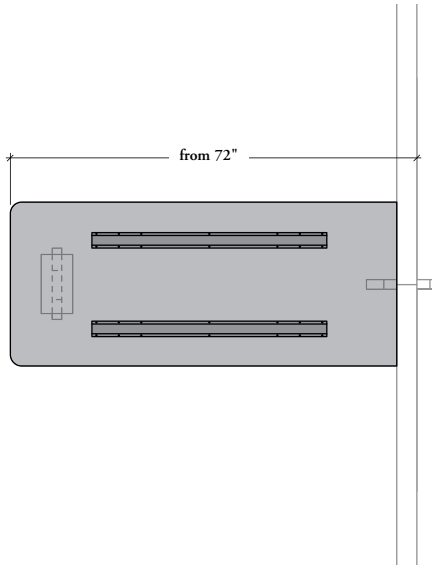

Fence Application

height-adjustabilty

height-adjustability

UNDERSTANDING HEIGHT-ADJUSTABILITY 360

HEIGHT-ADJUSTABLE RUN-OFF OVERVIEW 364

RUN-OFF ADJUSTMENT RANGE 365

HISPACE HEIGHT-ADJUSTABLE TABLES OVERVIEW 366

HISPACE TABLES ADJUSTMENT RANGE 367

NAVIGATE HEIGHT-ADJUSTABLE TABLES OVERVIEW 369

NAVIGATE TABLES ADJUSTMENT RANGE 370

TABLE SWITCHES 371

HEIGHT-ADJUSTABLE RUN-OFF – BEVEL BASE BASICS 372

PLANNING WITH HEIGHT-ADJUSTABLE RUN-OFF – BEVEL BASE 374

PLANNING GROMMETS & CUT-OUTS ON HEIGHT-ADJUSTABLE RUN-OFF 377

HISPACE WORKSURFACE WITH QUICK CONNECT KIT BASICS 378

WORKSURFACE FOR NAVIGATE BASE BASICS 379

height-adjustability (continued)

PLANNING WITH HISPACE OR NAVIGATE WORKSURFACES 380

PLANNING WITH WORKSURFACE CUT-OUTS FOR HISPACE OR NAVIGATE HEIGHT-ADJUSTABLE TABLES 384

GRAIN/PATTERN DIRECTION & EDGE TRIM STYLES – HISPACE OR NAVIGATE WORKSURFACES 387

HISPACE QUICK CONNECT HEIGHT-ADJUSTABLE MECHANISM BASICS 388

PLANNING WITH HISPACE QUICK CONNECT HEIGHT-ADJUSTABLE MECHANISMS 389

PLANNING WITH WIDTH CONFIGURATIONS FOR HISPACE QUICK CONNECT HEIGHT-ADJUSTABLE MECHANISMS 391

PLANNING WITH HEIGHT-ADJUSTABLE TABLE SCREENS FOR HISPACE HEIGHT-ADJUSTABLE TABLES 393

PLANNING WITH HISPACE WORKSURFACES & QUICK CONNECT HEIGHT-ADJUSTABLE MECHANISMS 394

NAVIGATE HEIGHT-ADJUSTABLE BASE BASICS 395

PLANNING WITH NAVIGATE HEIGHT-ADJUSTABLE BASES 396

PLANNING WITH WIDTH CONFIGURATIONS FOR NAVIGATE HEIGHT-ADJUSTABLE BASES 398

height-adjustability (continued)

PLANNING WITH HEIGHT-ADJUSTABLE TABLE SCREENS FOR NAVIGATE TABLES 400

PLANNING WITH WORKSURFACES & NAVIGATE HEIGHT-ADJUSTABLE BASES 401

WIRE MANAGEMENT FOR HISPACE OR NAVIGATE HEIGHT-ADJUSTABLE TABLES 402

UNDERSTANDING STORAGE CABINET FOR HEIGHT-ADJUSTABLE RUN-OFF 405

STORAGE CABINET FOR HEIGHT-ADJUSTABLE RUN-OFF BASICS 406

PLANNING WITH STORAGE CABINET FOR HEIGHT-ADJUSTABLE RUN-OFF 407

STORAGE CABINET CAPACITIES 408

GRAIN/PATTERN DIRECTIONS – STORAGE CABINET 409

understanding height-adjustability

Height-Adjustable Run-Offs, hiSpace or Navigate Height-Adjustable Tables can be used to provide different height-adjustable solutions in Expansion Cityline.

EZ compatible

Table collections listed below are compatible with Desk Structure and EZ Fence Structure. Refer to the EZ Fence Structure section of the application guide if planning with EZ Fence

- All height-adjustable products must be specified separately
- Expansion Cityline offers three height-adjustable tables collections:
  - Run-Off
  - hiSpace
  - Navigate

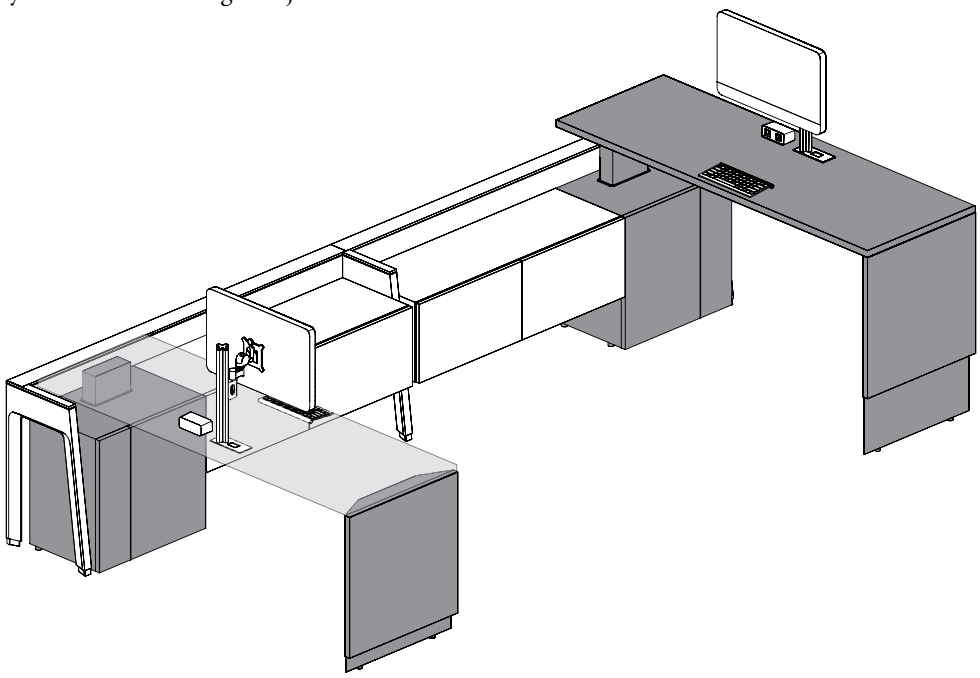

height-adjustable run-off

Height-Adjustable Run-Off (JNHB) combined with storage cabinet for Height-Adjustable Run-Off (JNHSC) create individual workstations with enhanced function and aesthetic.

A light, open look is achieved by planning multi-layered workstations off the beam. Its unique Bevel Base design dissimulates height-adjustable mechanism and provides a casegoods look and feel. On the other side, a cover maintains a clean aesthetic while hiding and managing cables from storage to worksurface.

Run-Off is available with three different switches, including the Toggle Display Switch equipped with Bluetooth.

Height-Adjustable Run-Off with Bevel Base uses Piezo collision detection technology, a hardware-based sensor that is integrated in the height-adjustable lifting column. Travel speed of 1 inch per second complies with safety standards. Refer to Complements Price and Product Guide for more details.

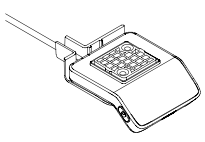

signature toggle display switch

Signature Toggle Display Switch provides is four programmable memory settings and is equipped with Navigate GPS™, a sit/stand tool designed to facilitate table adjustment and healthy sit/stand routines. Advanced features include integrated QR codes that readily link users to how-to guides and FAQs. Bluetooth® connectivity permits adjustment via mobile device using LINAK desk control app with Autodrive™.

understanding height-adjustability (continued)

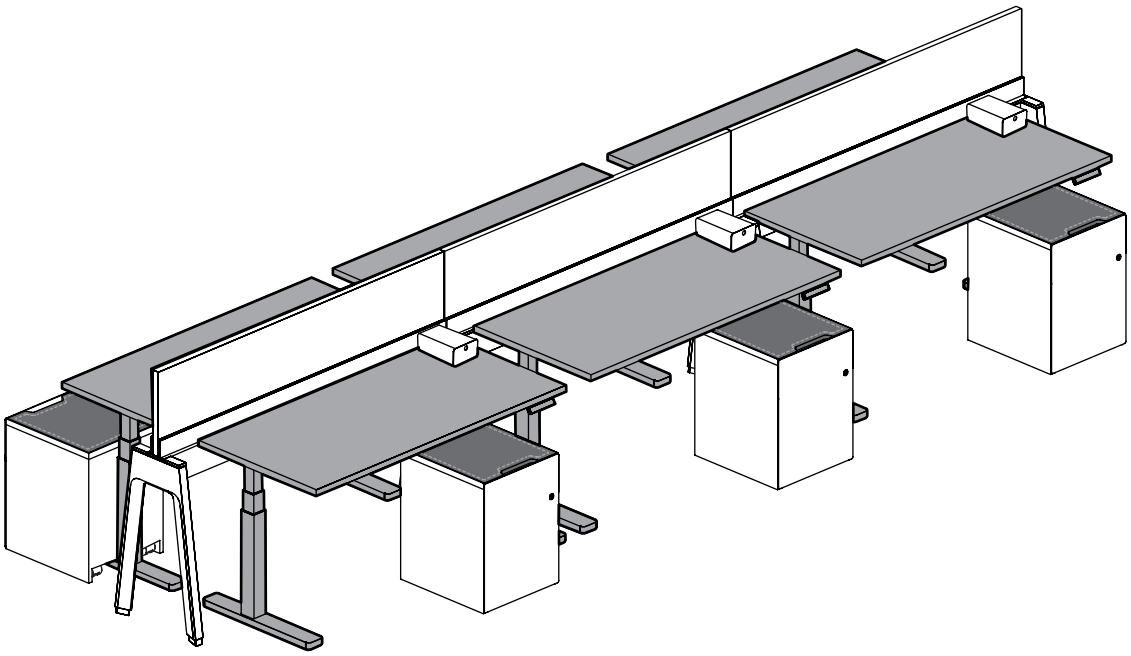

hispace

The height-adjustable mechanism offers a true value proposition to create different workstation designs. hiSpace is built by selecting a worksurface and a Height-Adjustable Mechanism, available in rectangular or 120˚ shape. Offered in limited options of finishes, sizes, switches and height-adjustable range. hiSpace Quick Connect includes a gyroscope-based collision detection system and meets BIFMA compliant height-adjustment range.

hiSpace features a unique user-friendly Quick Connect technology and goes from pallet and boxes to a completely assembled and functional table in under five minutes. There are three primary features at the heart of the new design:

– A Quick Connect "Connection Kit" top frame comes pre-installed on the worksurface.

– Slide and Lock leg columns that use such a simple slide feature to connect the legs to the worksurface and a cam lock to secure them in place.

– Power Pak is available in option in a prewired kit that uses the Cable Organizer with Felt Cover to manage the table cables and controls.

hiSpace and Navigate tables in Expansion Cityline use a gyroscope based collision detection technology. In compliance with safety standards, the travel speed in downward direction has been reduced to 1 in per sec. for the last 5 inches of travel. Please refer to Complements Price and Product Guide for more details.

understanding height-adjustability (continued)

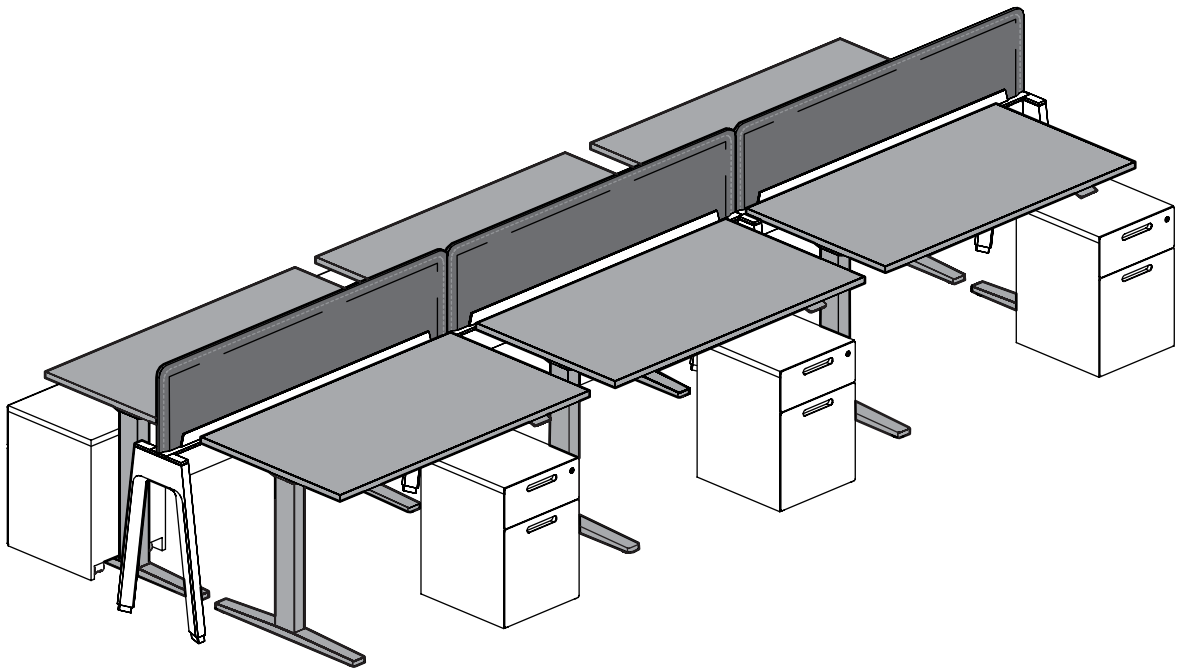

navigate

Navigate Height-Adjustable Tables provide a sturdy construction and a refined aesthetic with no visible fasteners. Rectangular and 120˚ tables are offered with multiple options of integrated power below the worksurface. Each table requires only one plug and accessories for electrics ensure effective cable management.

Available in all Teknion finishes, and is a available with three different switch options, including the Toggle Display Switch equipped with Bluetooth.

Navigate and hiSpace tables in Expansion Cityline use a gyroscope based collision detection technology. In compliance with safety standards, the travel speed in downward direction has been reduced to 1 in per sec. for the last 5 inches of travel. Please refer to Complements Price and Product Guide for more details.

understanding height-adjustability (continued)

table orientation

hiSpace or Navigate Height-Adjustable Table can be used parallel or perpendicular with Expansion Cityline Desk or EZ Fence Structure

1. Parallel application can require specific worksurface dimension to fit in Desk or EZ Fence Structure. Refer to hiSpace Worksurfaces with Quick Connect Kit or Worksurfaces Navigate for Base on this section
2. Perpendicular application does **not** require specific worksurface dimension

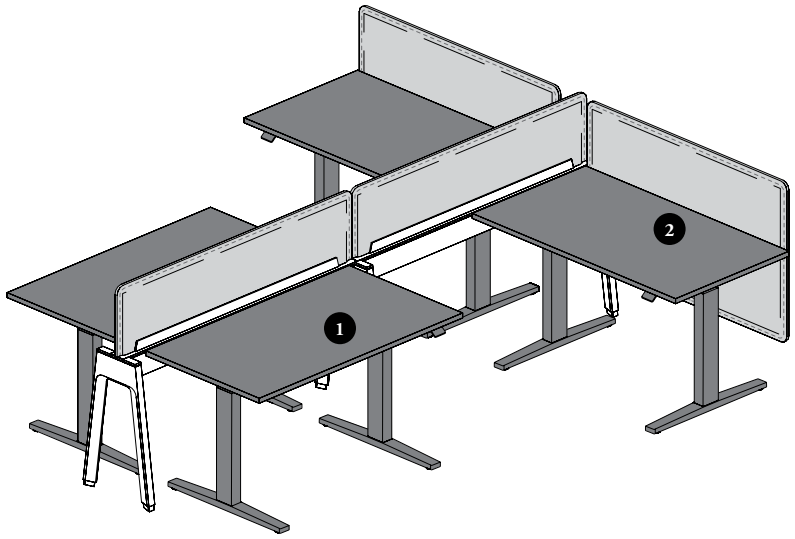

space division

The space division with hiSpace or Navigate Height-Adjustable Table can be accomplished in two manners with their proper characteristics:

1. Space division mounted directly on beam to provide a consistant screen height
2. Space division mounted on hiSpace or Navigate Height-Adjustable Table follows the worksurface height

Space division must be specified separately. For more details, refer to Heigh-Adjustable Table Screens section for screens on Height-Adjustable Tables, Workstation Screens section for screens on Desk Structure or EZ Fence Screens section for screens on EZ Fence Structure

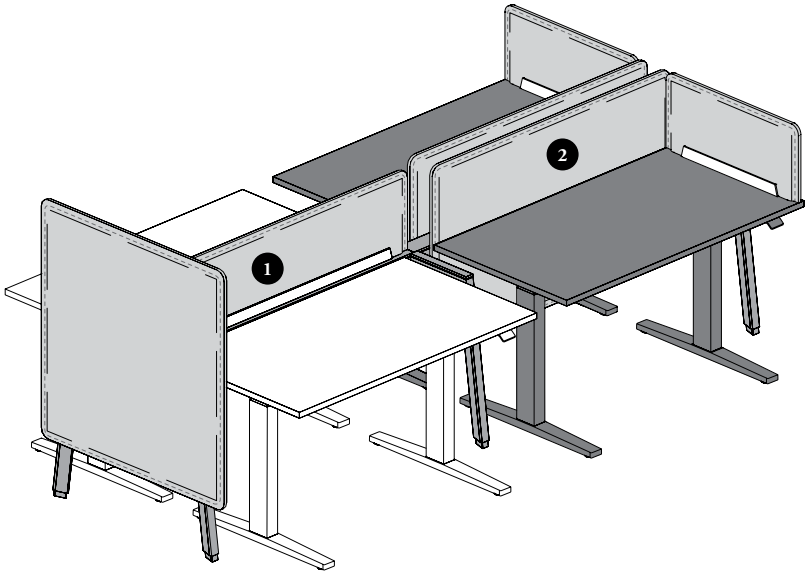

height-adjustable run-off overview

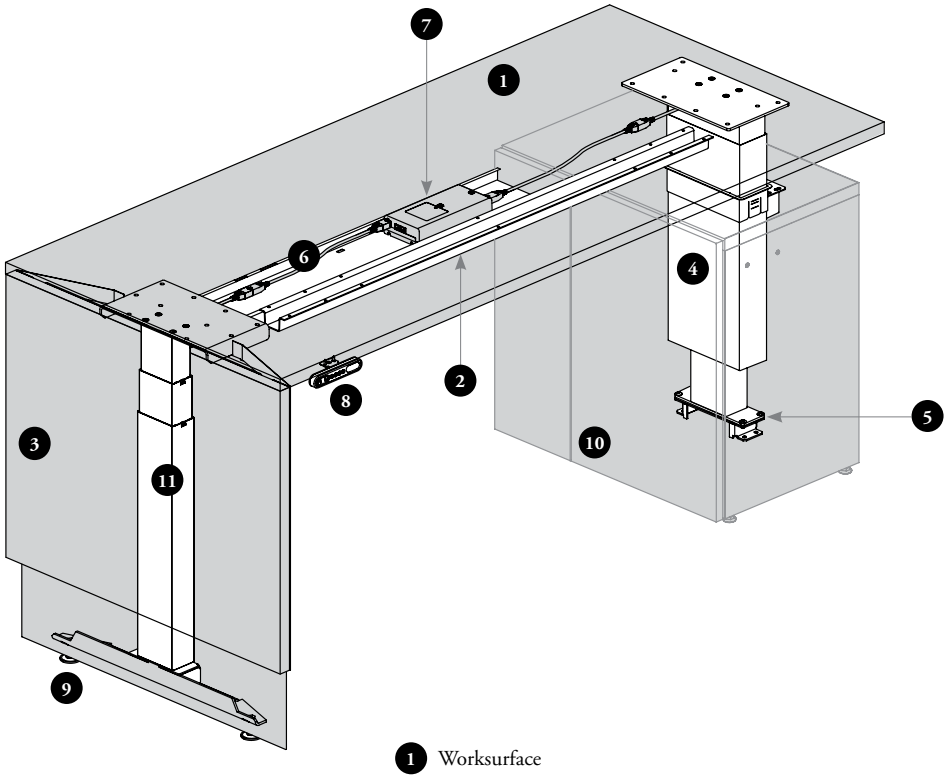

1. Worksurface
2. Reinforcing Bar
3. **Height-Adjustable Bevel Base** is included with Height-Adjustable Run-Off. The leg is composed of two metal skins that hide Height-Adjustable Mechanism
4. **Height-Adjustable Mechanism with Cover** is included with Height-Adjustable Run-Off. The cover also allows electricity management
5. **Column Base** comes with run-off and allows to mount the Height-Adjustable Mechanism inside the Storage Cabinet for Height-Adjustable Run-Off
6. **Power Tray**
   • Manage wires below the worksurface
7. **Electric Control Box**
   • Is concealed in the center Power Tray
   • Plugs directly on Power Module – Storage for Height-Adjustability (JNEPMH)
   • Maximum Power draw is 300 Watts
   • 0.1 Watt resting Power draw
8. **Switch** can placed on-site left or right
9. **Levelers** are included with base and height-adjustable mechanism and have an adjustment range of 3"
10. **Storage for Height-Adjustable Run-Off** is used to hide and mount Height-Adjustable Mechanism. It is also used to attach the run-off to the structural beam
11. The **Height-Adjustable Mechanism** uses a PIEZO™ from Linak product. The adjustable run-off shall feature the PIEZO™ hardware based technology from Linak. A sensor integrated in the lifting column reacts to any obstruction when raising or lowering the run-off, then halts and reverses to prevent material damages. In spite of the PIEZO™ technology being in place, there may still be a risk of pinching in exceptional cases. Close supervision is necessary when this furniture is used by individual with limited physical, sensory or mental abilities, or with a lack of experience

Cable Tray and Dual Wire Management Clips
• A Power Bar (JNEPP) can be specified separately. It can be clipped into the Cable Tray or Dual Wire Management Clips

run-off adjustment range

- Can be easily adjusted to fit the individual and support multiple working styles
- Enables working in both seated and standing postures, supporting neutral postures, movement and comfort preferences throughout the work day
- All dimensions are nominal

Extended Range Electric Configuration (E)

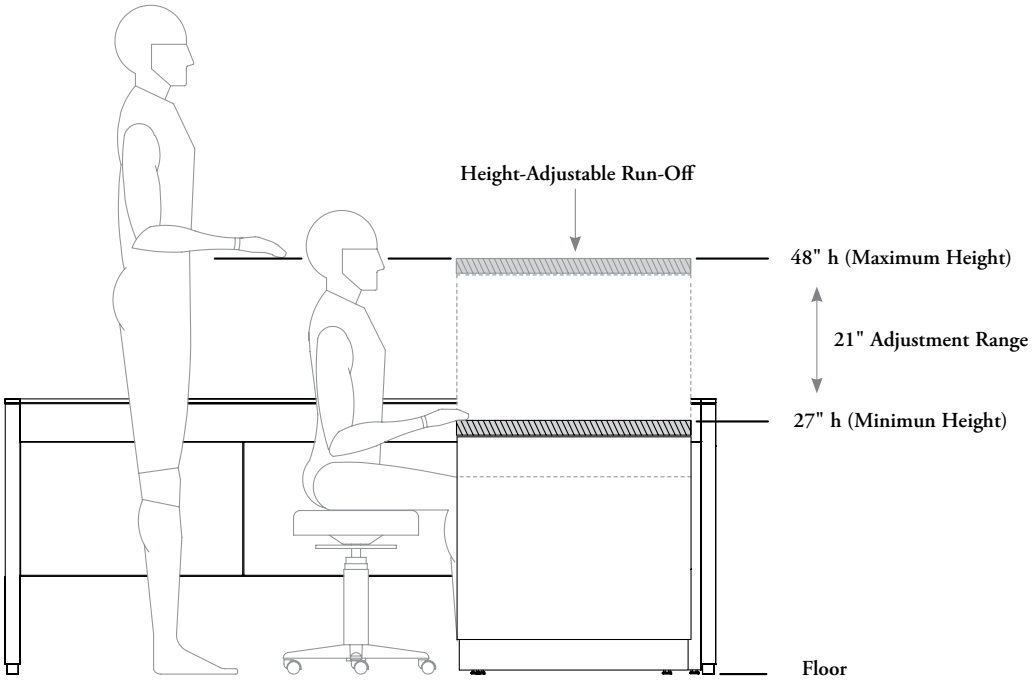

Weight Capacity *

1 3/16" thick Solid Top with Mechanism:

– 150 lbs

* **Note** that all additions on Height-Adjustable Run-Off – Bevel Base must be considered (ie: MAST Monitor Arm, Computer Display, Modesty Panel, Elevated Screen)

hispace height-adjustable tables overview

A hiSpace Height-Adjustable Table consists of two components which are ordered separately:
– Worksurface
– Height-Adjustable Mechanism

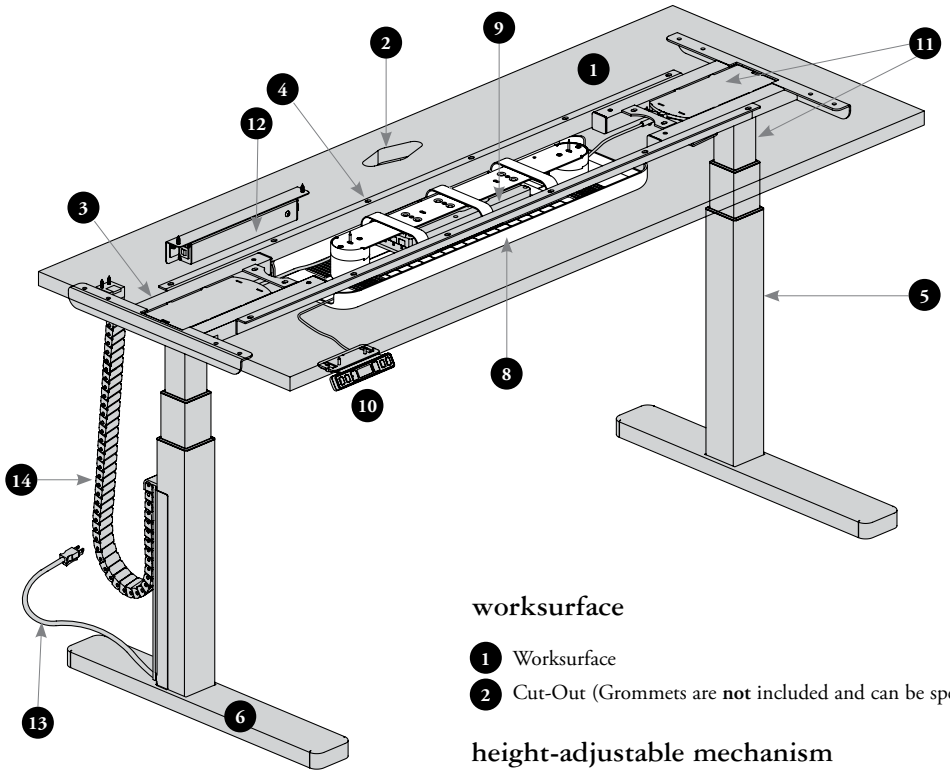

worksurface

1. Worksurface
2. Cut-Out (Grommets are **not** included and can be specified separately)

height-adjustable mechanism

3. Pre-installed Connection Kit Collar
4. Pre-installed Connection Kit Stretcher Bar
5. Leg Column
6. **Foot with Levelers** have an adjustment range of 1/2"
7. Corner Foot with Leveler

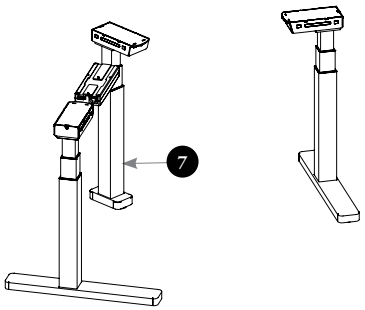

Power Pak (Two styles are available):
- **Knocked-Down Power Pak** includes a Control Box, a Switch, a Power Cord and Motor Cables.
- **Pre-Assembled Power Pak – Cable Organizer with Felt Cover** includes a Cable Organizer with Felt Cover, a pre-wired Control Box to a Switch, Power Cord and Motor Cables.

8. **Cable Organizer with Felt Cover** manages the Electric Control Box wires below the worksurface
9. **Electric Control Box with DC Power Output**
   - Is concealed in the Cable Organizer with Felt Cover
   - Plugs directly on building wall
   - Power draw is 300 Watts
   - 0.2 Watt resting Power draw
   - Current draw is 3.6A for 2-leg products and 5A for 3-leg products
   - Consumption is 5 Amps
10. **Switch** can be placed on-site left or right
11. The **Height-Adjustable Mechanism** uses a Collision Detection feature. In spite of this feature being in place, there may still be a risk of pinching. Close supervision is necessary when this furniture is used by individual with limited physical, sensory or mental abilities, or with a lack of experience
12. **External Power Bar** with Worksurface Bracket
13. Power Cord
14. **Vertical Wire Carrier (ordered separately)** manages all other wires below the worksurface to the floor

hispace tables adjustment range

- Can be easily adjusted to fit the individual and support multiple working styles
- Enables working in both seated and standing postures, supporting neutral postures, movement and comfort preferences throughout the work day
- All dimensions are nominal
- For Rectangular or 120° Height-Adjustable Table, each base is operated independently
- **No** casters are available for hiSpace Height-Adjustable Tables

Extended Range Electric – Extended Configuration (9E)

For safety, a 1" gap must be keep between the table and the Structural Beam and Legs

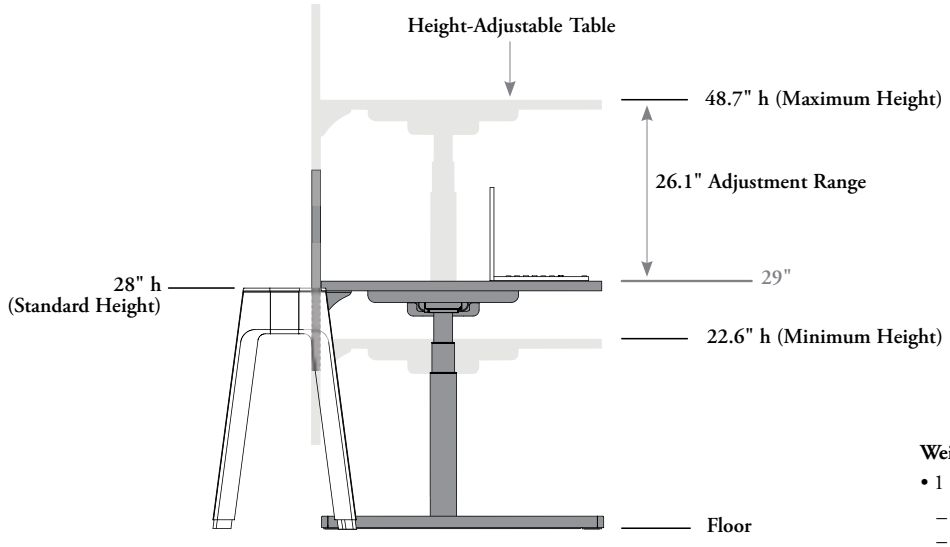

Weight Capacity

- 1 3/16" thick Solid Top with Mechanism:
  - Rectangular Height-Adjustable Table: 200 lbs*
  - 120° Height-Adjustable Table: 300 lbs*
- Mounted acessories reduce table weight capacity (Height-Adjustable Table Screen, Suspended Storage, Monitor Arm, etc.) Combination must be validated with the Weights & Volumes document

* **Note:** Load must **not** exceeded 100 lbs on a single motor. All additions on height-adjustable worksurfaces must be considered (ie: Computer, Keyboard Support, Display, Monitor Arm, Privacy Height-Adjustable Table Screen, Casual Drawer and other accessories...)

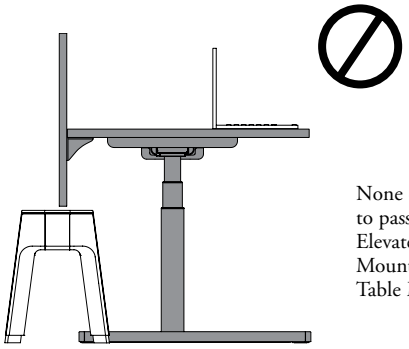

None of hiSpace height range allow the table to pass over the fence structure when used with Elevated Screen – Height-Adjustable Table Mounted. Add-On Screens – Height-Adjustable Table Mounted can be used

hispace tables adjustment range (continued)

hiSpace adjustment range with mobile pedestal/credenza

Extended Range Electric – with Riser Configuration (9U)

When a 21" high Mobile Pedestal with Seat is used with a hiSpace Height-Adjustable Table, the **Extended Range Electric – with Riser Configuration (9U) (25" to 51.1")** needs to be specified

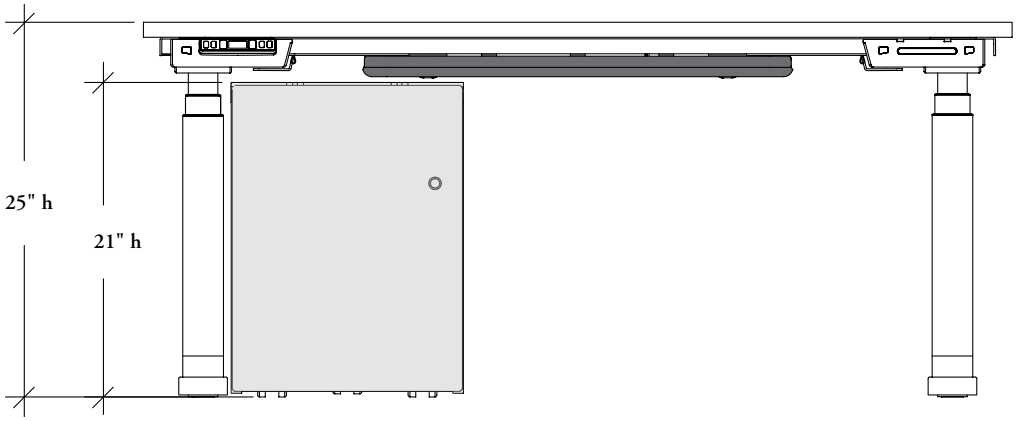

A 23" high Mobile Pedestal or Mobile Credenza **cannot** be installed under a hiSpace Height-Adjustable Table with (9E or 9U Configuration) because they would hit each other along the adjustment range

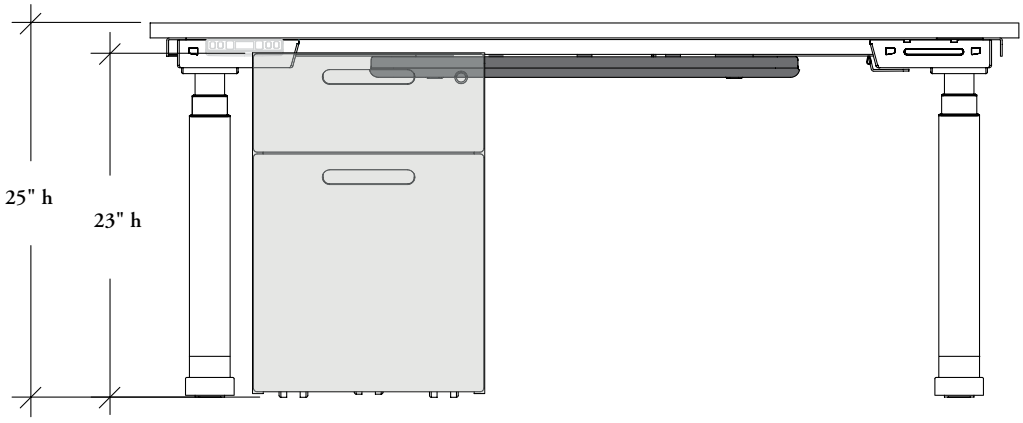

navigate height-adjustable tables overview

A Navigate Height-Adjustable Table consists of two components which are ordered separately:
– Worksurface
– Height-Adjustable Base

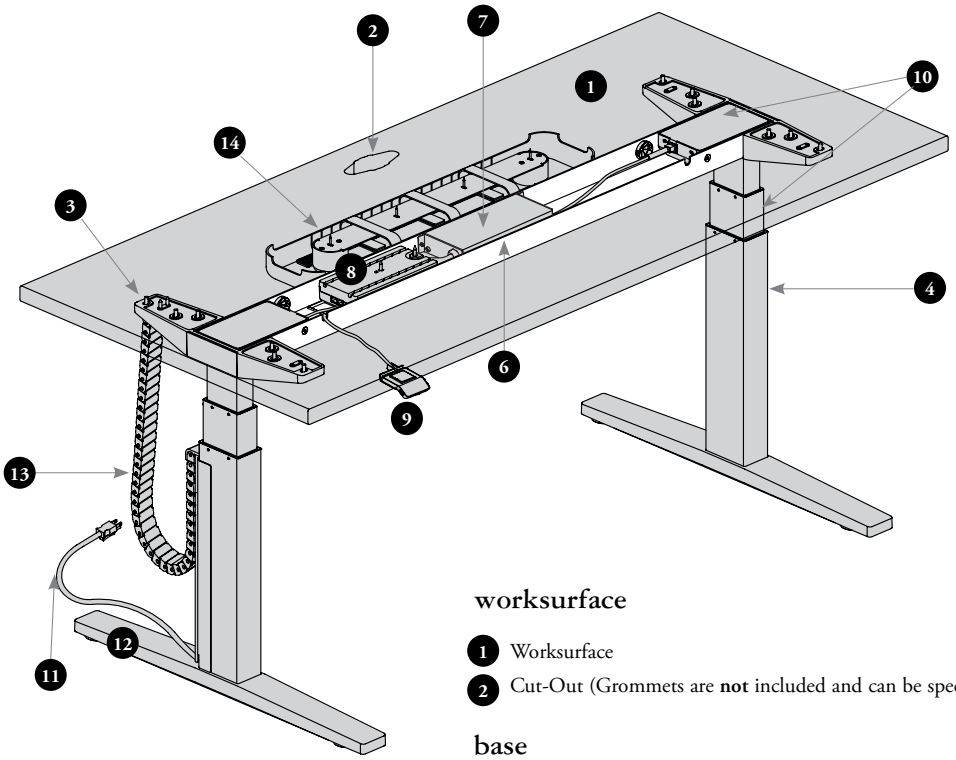

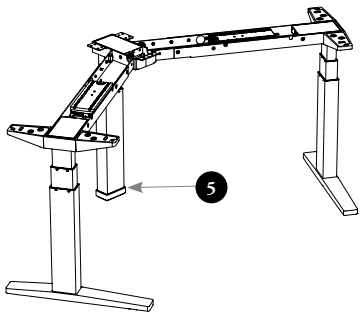

worksurface

1. Worksurface
2. Cut-Out (Grommets are **not** included and can be specified separately)

base

3. Worksurface Strut
4. **Leg Bezel** is included with table. The leg is composed of three metal skins that hide Height-Ajustable Mechanism
5. Corner Foot with Leveler
6. **Cross Channel**
   • Manage the Electric Control Box wires below the worksurface only
7. Cross Channel Integrated Powerbar (optional)
8. **Electric Control Box with DC Power Output**
   • Is concealed in the Cross Channel (for majority of Height-Adjustable Tables)
   • Plugs directly on building wall
   • Maximum Power draw is 300 Watts
   • 0.1 Watt resting Power draw
9. **Switch** can be placed on-site left or right
10. • The **Height-Adjustable Mechanism** uses a Collision Detection feature. In spite of this feature being in place, there may still be a risk of pinching. Close supervision is necessary when this furniture is used by individual with limited physical, sensory or mental abilities, or with a lack of experience
    • Consumption for 2 motors is 300 Watts and for 3 motors is 450 Watts
11. Power Cord
12. **Foot with Levelers** have an adjustment range of 1/4"
13. **Vertical Wire Carrier (ordered separately)** manages all other wires below the worksurface to the floor
    Cable Organizer with Felt Cover
14. **Cable Tray (ordered separately) and Dual Wire Management Clips**
    • A Power Bar (JNEPP) can be specified separately. It can be clipped into the Cable Tray or Dual Wire Management Clips

navigate tables adjustment range

- Can be easily adjusted to fit the individual and support multiple working styles
- Enables working in both seated and standing postures, supporting neutral postures, movement and comfort preferences throughout the work day
- All dimensions are nominal
- For rectangular or 120° Height-Adjustable Table, each base is operated independently
- **NOTE:** When casters are used, add 1 3/4" to stated height range for the height-adjustable table
- Two height ranges are available:

Extended Range Electric – Extended Configuration (9E)

Is recommended to be used to benefit of maximum height-adjustable range. With Standard-Height Beam, the table must always be positioned at least 1" from Structural Beam and Legs. With Low-Height Beam allows to position table above the beam when used with no screen

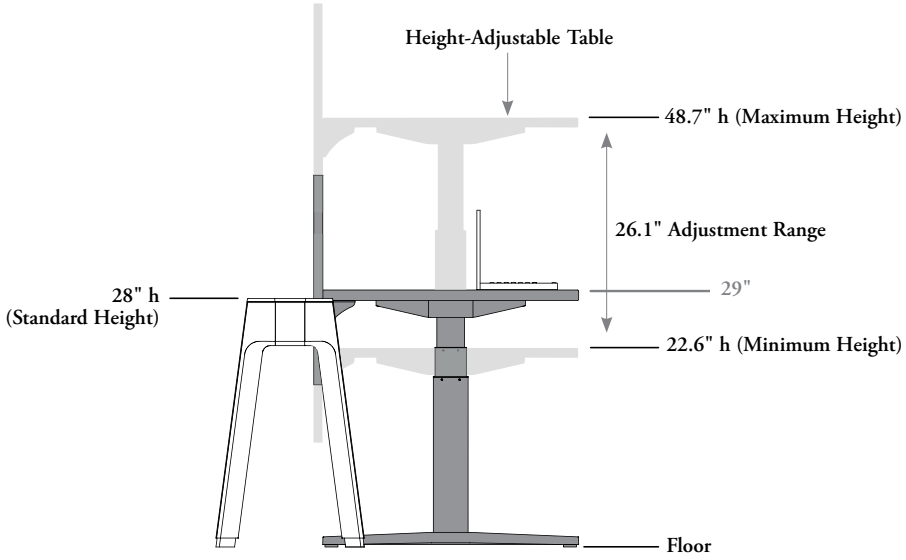

Extended Range Electric – Cityline Restricted Configuration (9M)

Is recommended to be used to avoid interference when used in the following configuration:

– Low-Height Fence in combination of a table with Elevated Screen – Height-Adjustable Table Mounted

– Standard-Height Fence with Facing Side electrical in combination of table with no Elevated Screen

– Mobile or fixed storage stored below the worksurface. Refer to Freestanding Storage section fore more details

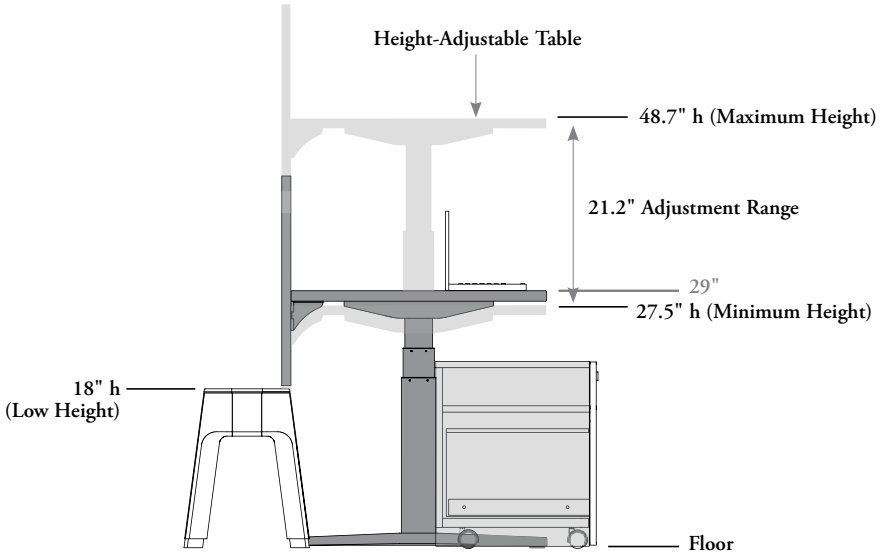

Weight Capacity

- 1 3/16" thick Solid Top with Mechanism:
  - – Rectangular Height-Adjustable Table: 200 lbs*
  - – 120° Height-Adjustable Table: 300 lbs*
- Mounted accessories reduce table weight capacity (Height-Adjustable Table Screen, Suspended Storage, Monitor Arm, etc.) Combination must be validated with the Weights & Volumes document

* **Note:** Load must not exceeded 100 lbs on a single motor. All additions on height-adjustable worksurfaces must be considered (ie: Computer, Keyboard Support, Display, Monitor Arm, Privacy Height-Adjustable Table Screen, Casual Drawer and other accessories...)

table switches

Switch for Height-Adjustable Mechanism/Base

- Supports sit-to-stand height-adjustment
- Can be placed on-site left or right
- Five underworksurface switches can be specified:

Can be used with Run-Off or Navigate Height-Adjustable Tables only

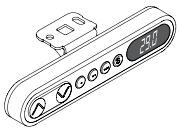

Display with Up/Down Memory (D)

- Basic up/down function
- Display
- Three programmable memory settings
- Error code read-out

Finish:
Ebony Coordinate

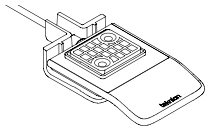

Toggle Up/Down (F, G or H)

- Basic up/down function
- Soft touch material
- Contoured shape for ease of use

Finishes:
Platinum (F), Crisp Grey (G) or Anthracite (H)

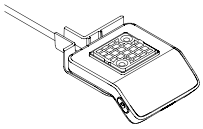

Display Toggle with Memory (M, N or O)

- Large display
- Four programmable memory settings
- GPS: Teknion's Sit/Stand Guidens and Reminders Aid
- Soft touch material
- Can be reprogrammed using Teknion Switch Configuration software
- Error code read-out with QR code

Finishes:
Platinum (M), Crisp Grey (N) or Anthracite (O)

Can be used with hiSpace Height-Adjustable Tables only

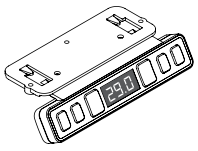

Programmable Display with Up/Down Memory Switch

- Basic up/down function
- Display
- Three programmable memory settings
- Error code read-out

Finish:
Platinum Coordinate

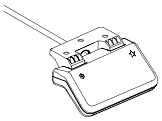

Toggle Display with Memory (A)

- Up-Down Toggle for Intuitive Adjustment (Push down of lift switch to move table up and down)
- Digital display for height indication
- Two programmable memory settings

Finish:
Black

NOTE

Display switches include the ability to change units from metric/imperial and the display height to reflect the actual height once installed.

Switch Positions Underworksurface

Switch Style	Laminate Edge
Toggle Display with Memory (A)	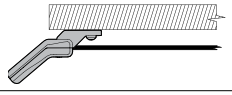 for hiSpace
Display with Up/Down Memory (D)	for hiSpace OR for Navigate
Toggle Up/Down (F, G or H)	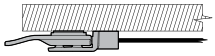
Display Toggle with Memory (M, N or O)	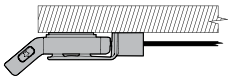 for Navigate

height-adjustable run-off – bevel base basics

The following outlines the features of the Height-Adjustable Run-Off – Bevel Base.

- Bevel Base is included with run-off and is the only support style available
- Optional Suspended Modesty Panels (JNASMG, JNASML) can be specified separately. For specifying the appropriate modesty panel, refer to the Desk Accessories section

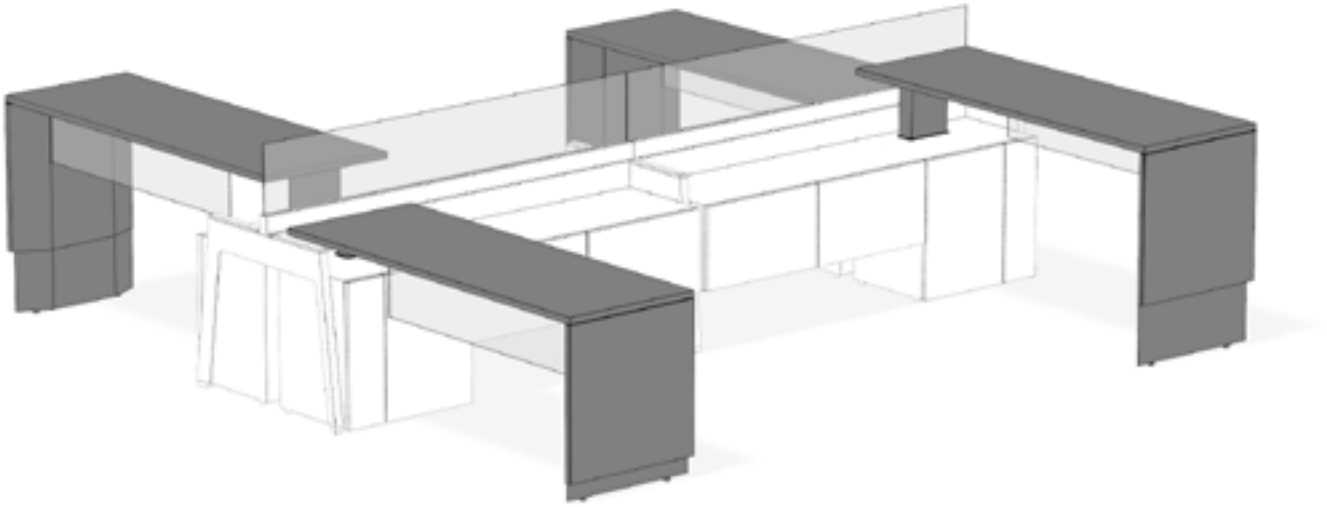

Finishes

Worksurface: Foundation Laminate
Edge Trim Styles: Flat Trim (1.5 mm) and/or Straight Trim (3 mm)
Edge Trim Finishes: Edge Trim colors
End Panel: Source Laminate
Grommet Finish: Foundation, Mica and Accent
Height-Adjustable Mechanism, Metal Bevel Base with Levelers and Hardware: Foundation, Mica and Coordinate Colors. Levelers will match the Metal Bevel Base color

* **Coordinate Colors** are solid colors that can be used to match wood print: Royal Cherry (M8), Ivory Birch (NB), Provincial Oak (NC), Coastal Elm (ND), Espresso Reflect (Q4), Stainless (Q6), Walnut Cathedralgrain (Q7), Mercurial Walnut (Q9), Java Walnut (R7), Urban Walnut (R8), Choice Maple (R9), Estate Cherry (V1), Campus Oak (VD), Flax Reflect (VL), Pecan Reflect (VV), Cocoa Brown Reflect (W8) and Sycamore Reflect (W9)

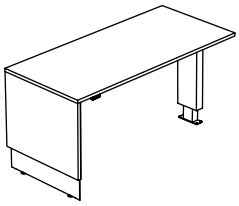

Height-Adjustable Run-Off – Bevel Base (JNHB)

- Comes with one 1 3/16" thick laminate worksurface, one Height-Adjustable Bevel Base with 1" thick laminate End Panel and one Height-Adjustable Mechanism
- Can be specified on Single- (S) or Double-Sided (D) Structural Beam (JNDBB or JNDCB), EZ Fence Beam (JZSBB, JZSBS, JZSCB or JZSCS)
- Available in widths from 60" to 84" (6" increments)
- Available in depths 24" or 30"
- Can be specified Left or Right handed
- Grommet option can be specified None (N) or with Rectangular Grommet. Two positions are available: Center (G) or Offset (H)
- Rectangular Grommet can also be combined with a Square Cut-Out. Two position styles are available: Square Cut-Out & Grommet Center (S) or Square Cut-Out & Grommet Offset (T)
- Offset grommet locations are handed configurations
- Gap between Height-Adjustable Run-Off and Storage Cabinet for Height-Adjustable Run-Off is 1 9/16"

height-adjustable run-off – bevel base – basics (continued)

height-adjustable run-off – bevel base worksurface dimensions

Single-Sided Lateral Beam Configuration

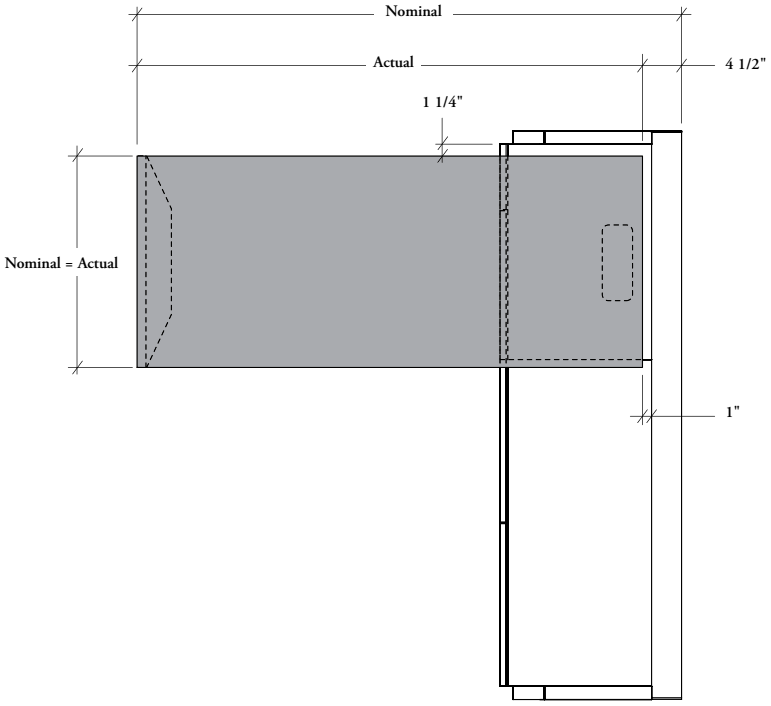

Double-Sided Lateral Beam Configuration

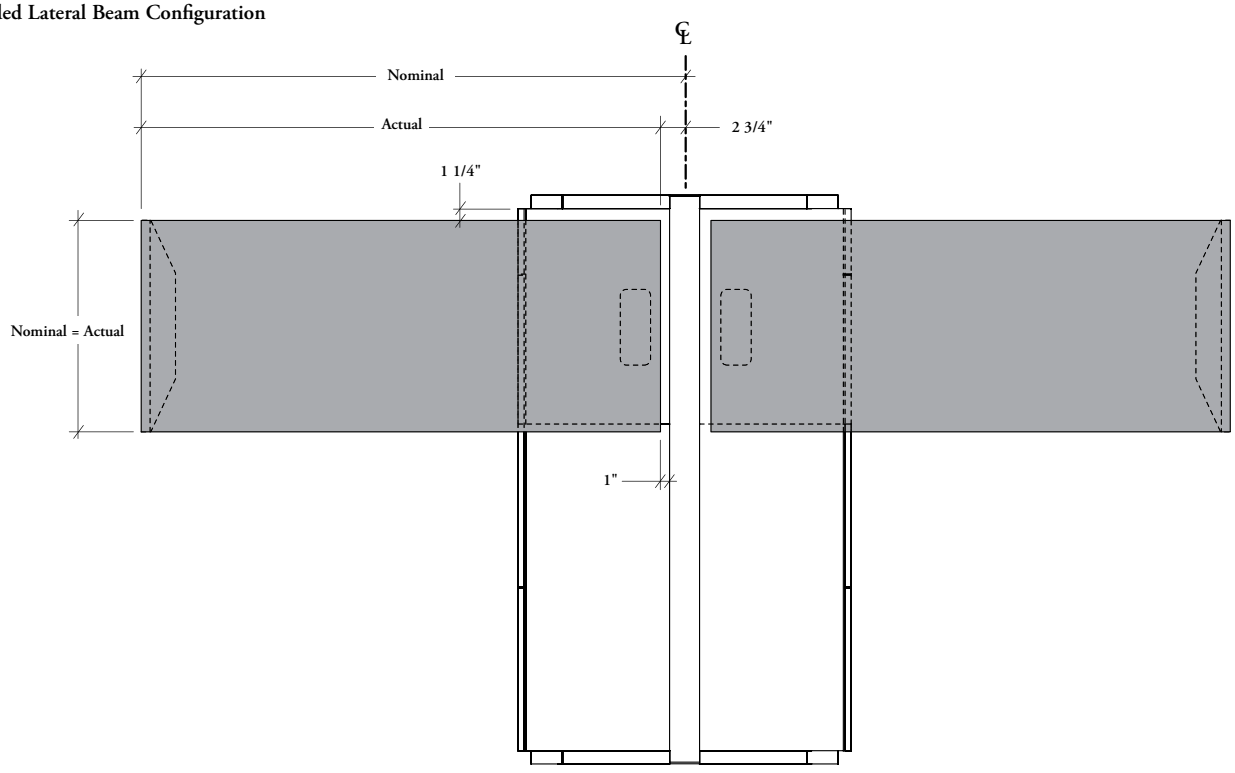

planning with height-adjustable run-off – bevel base

The following should be considered when planning with Expansion Cityline Height-Adjustable workstations.

- Enables L-Shaped configurations only
- One end must always be mounted inside a Storage Cabinet for Height-Adjustable Run-Off in a semi-suspended application
- Suspended Storage **cannot** be mounted under Height-Adjustable Run-Offs
- Mounted Storage and Accessories **cannot** be mounted on Height-Adjustable Run-Offs

linear and cubicle planning

Linear and cubicle plannings are allowed with Height-Adjustable Run-Off as long as each Single-Sided Structural Leg is stabilized

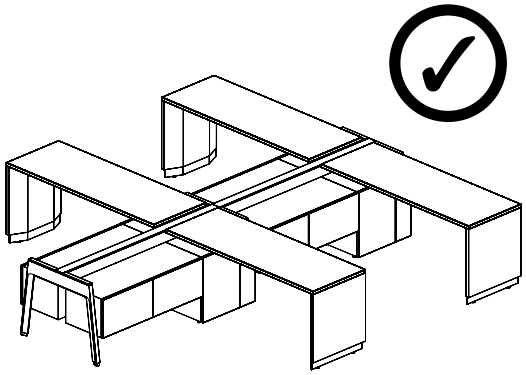

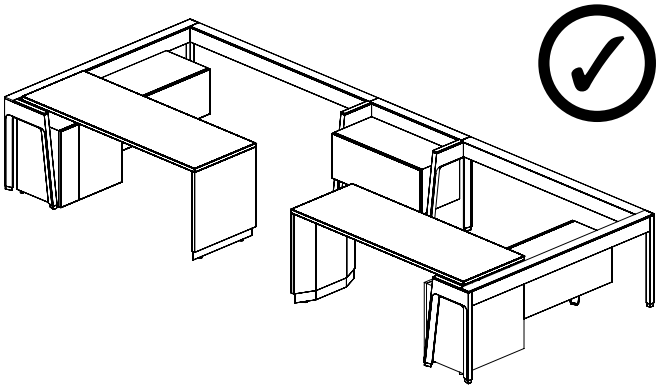

suspended modesty panel

Only the Suspended Modesty Panel (JNASMG, JNASML) can be used with Height-Adjustable Run-Offs

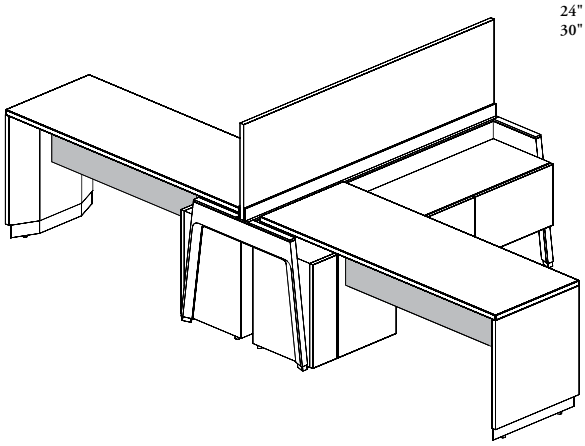

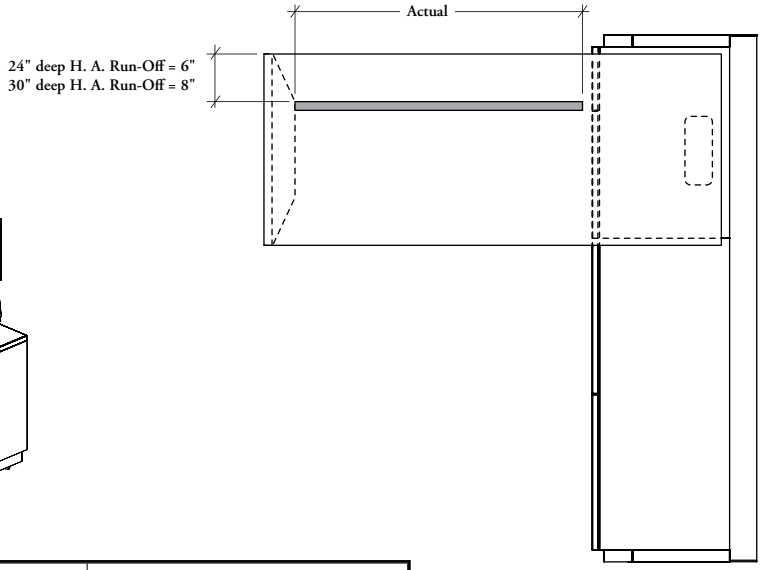

Storage Cabinet for Height-Adjustable Run-Off	Modesty panel width compared to run-off width
18" deep	- 24"
24" deep	- 30"

planning with height-adjustable run-off – bevel base – (continued)

screens

Sit and Slide Screens (JNSSM, JNSSE), except Sit and Slide with Accessory (JNSSA), and Casual Boards (JNSCG, JNSCE) can be used in front of Height-Adjustable Run-Off

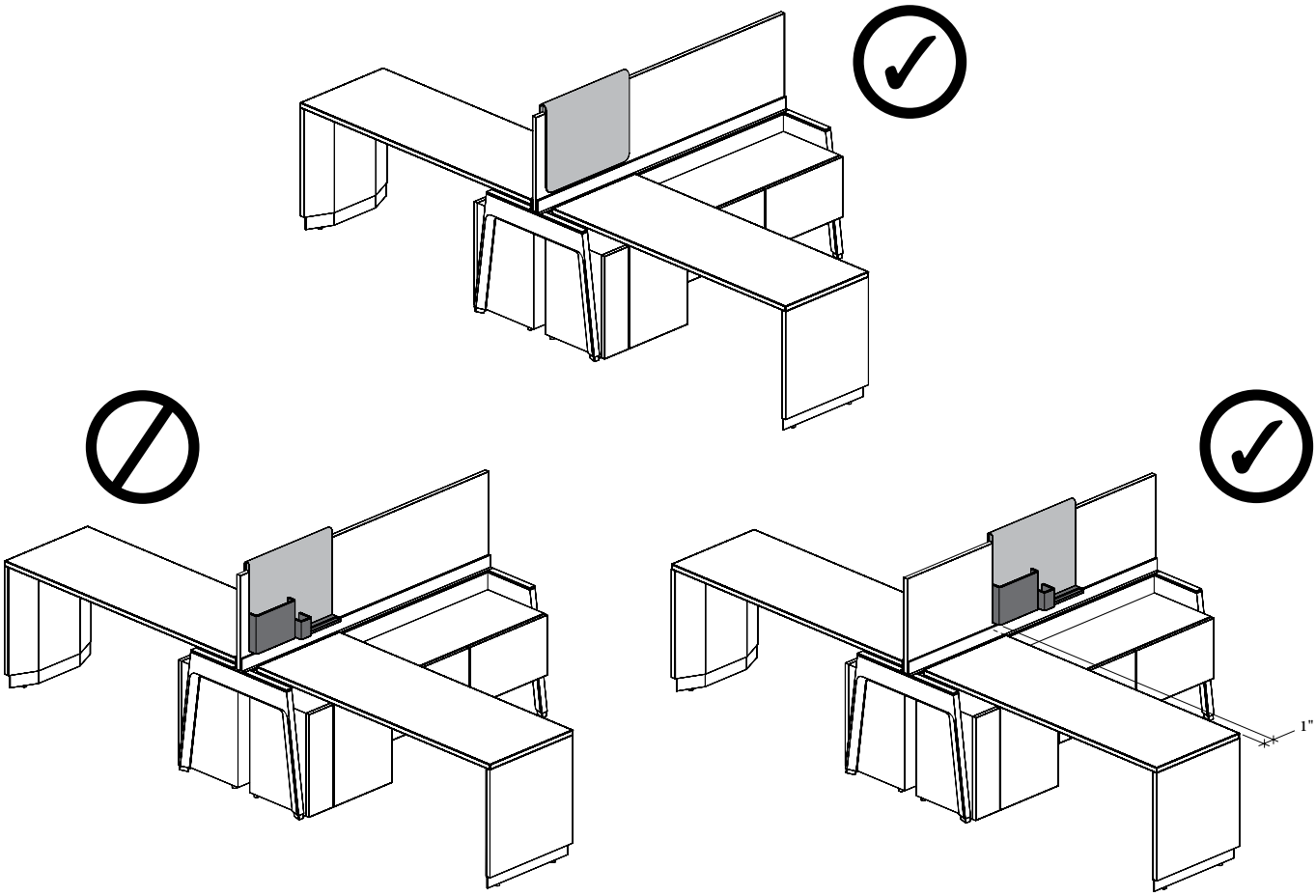

Elevated Screens – Leg-Mounted and Corner Elevated Screens (JNSECF) **cannot** be mounted on Height-Adjustable Run-Off Bevel Base

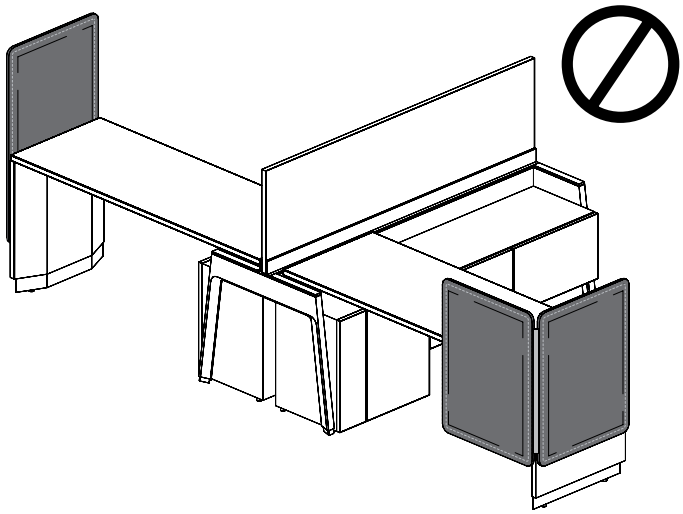

planning with height-adjustable run-off – bevel base – (continued)

screens (continued)

- Elevated Screens – Worksurface-Mounted or Height-Adjustable Table Mounted can be installed on the back edge of the run-off
- The maximum width of an elevated screen is obtained by substracting the corresponding value for each storage cabinet depth in the chart below. Additional recess is possible by substracting the desired value from the elevated screen maximum width

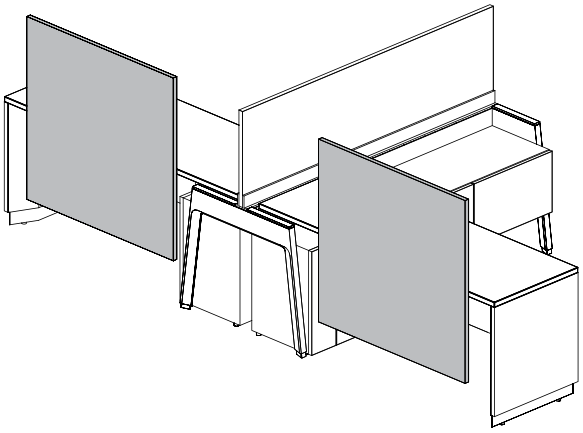

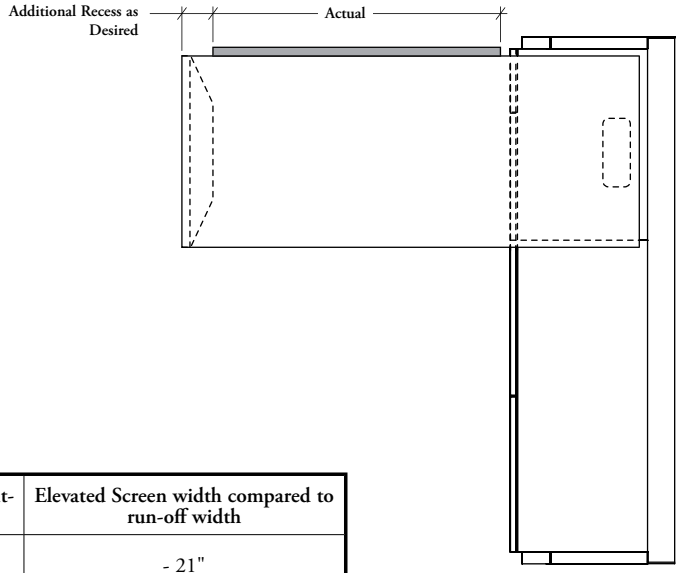

Storage Cabinet for Height-Adjustable Run-Off	Elevated Screen width compared to run-off width
18" deep	- 21"
24" deep	- 27"

power box and receptacle outlets

- Receptacle Outlets (JNEPRO) and outlets from the Chicago Power Box (JNECPB) **cannot** be mounted toward height-adjustable mechanism. There will be an interference. The power box and outlets can only be facing side on the opposite side of the Height-Adjustable Run-Off
- The Facing Down configuration of Power Box (JNEPBD) and Chicago Power Box (JNECPBD) **cannot** be mounted behind the Storage Cabinet for Height-Adjustable Run-Off or behind the credenza

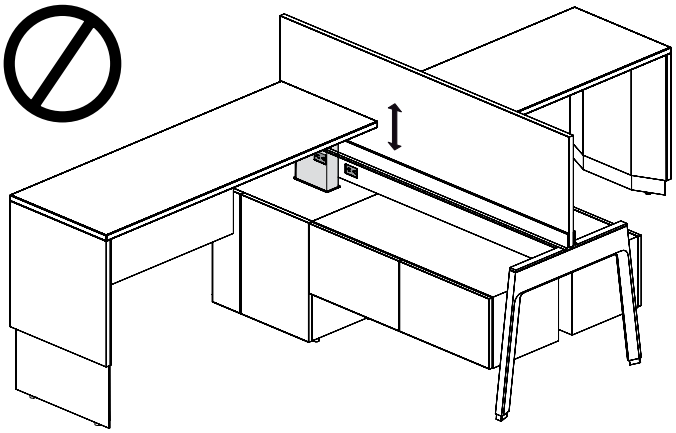

complements

- CPU Holder **cannot** be mounted under Height-Adjustable Run-Off
- Keyboard Support **cannot** be mounted under Height-Adjustable Run-Off
- Lamps can be used on Height-Adjustable Run-Offs. An Underworksurface Plug-In Power Bar (JNEPP) or a Power Qube (JNEPC) must be used with the Height-Adjustable Run-Off to provide power for the user's equipment

planning grommets & cut-outs on height-adjustable run-off

The following should be considered when planning grommets and cut-outs in Expansion Cityline Height-Adjustable workstations.

- All worksurfaces are available with or without grommet option
- Rectangular Grommet cut-outs provide an opening for routing electrical wiring and communication cables through the worksurface and allow the installation of Mast Monitor Arm. Can be combined with Square Cut-Out for the mounting of a Power Qube
- Grommet and square cut-out positions are **not** all available depending on worksurface dimensions; see individual product page for details

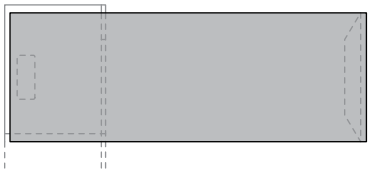

None (NN)

Grommet Positions

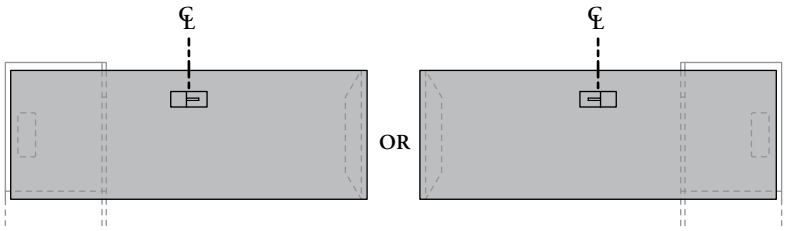

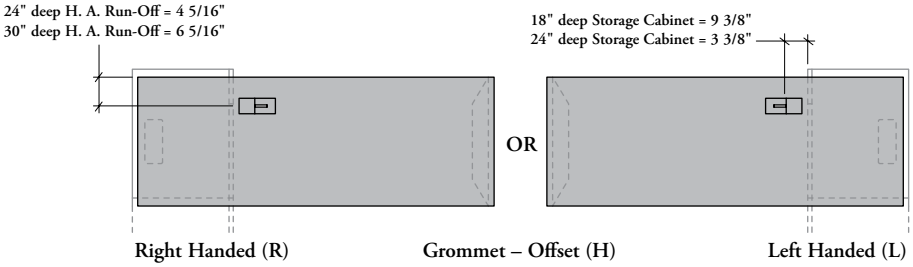

Square Cut-Out/Grommet Positions

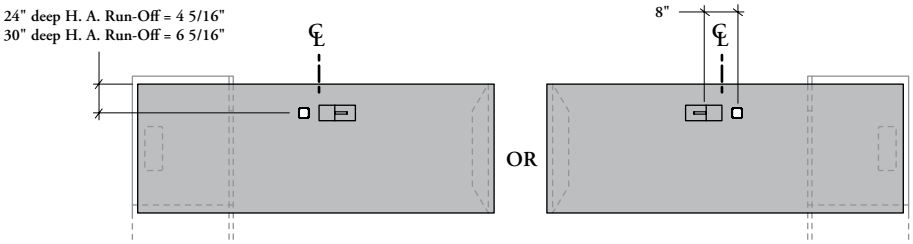

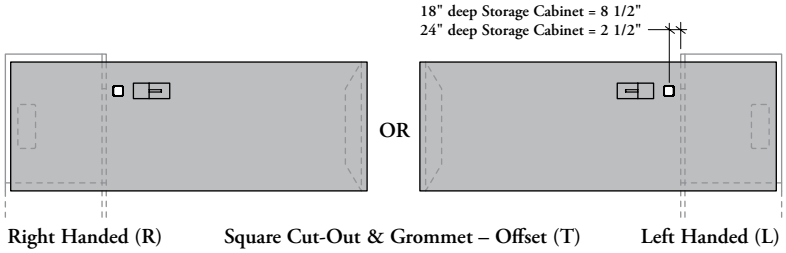

Square Cut-Out

- Combined with Rectangular Grommet, the Square Cut-Out comes with a Soft Gris coordinate grommet ring. The Power Qube (JNEPC) must be specified to complete the installation. For details, refer to the Lighting, Electrics & Communications section
- Provide direct acces to Power, Data or USB above the worksurface of Height-Adjustable Run-Off

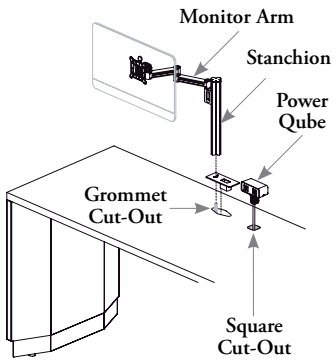

MAST and Swerv monitor arms

- Are designed for various levels of technology support (see Complements products)
- The Rectangular Grommet on worksurfaces can be replaced by a MAST Monitor Arm for Expansion Grommet (mounting option 5) or by a Swerv Monitor Arm for Diamond Grommet (mounting option 4)
- Left (shown below) and right rectangular grommet positions are optimized for monitor arms and prevent interference of mounting hardware with Storage Cabinet for Height-Adjustable Run-Off
- MAST Stanchions are limited to Single-Height only
- A maximum of two monitors can be mounted on Height-Adjustable Run-Offs
- Edge-clamped monitor arms can only be mounted in the open width between the Bevel Base and the Storage for Height-Adjustable Run-Off

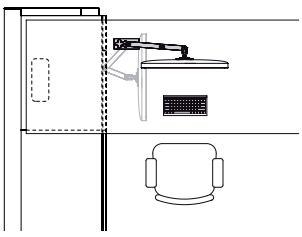

hispace worksurface with quick connect kit basics

Worksurfaces are available for hiSpace Height-Adjustable Mechanism – Rectangular or 120°.

- A hiSpace Height-Adjustable Table consist of two components: worksurface and height-adjustable mechanism which are ordered separately
- An Expansion Cityline Modesty Panel **cannot** be installed under a hiSpace Height-Adjustable Table. Only a Complement Modesty Panel can be installed in some configurations, refer to specification software for compatibility
- All dimensions are actual sizes to allow for propper gapping between worksurfaces or structure
- 120° Height-Adjustable Tables are **not** compatible with EZ Fence Structure

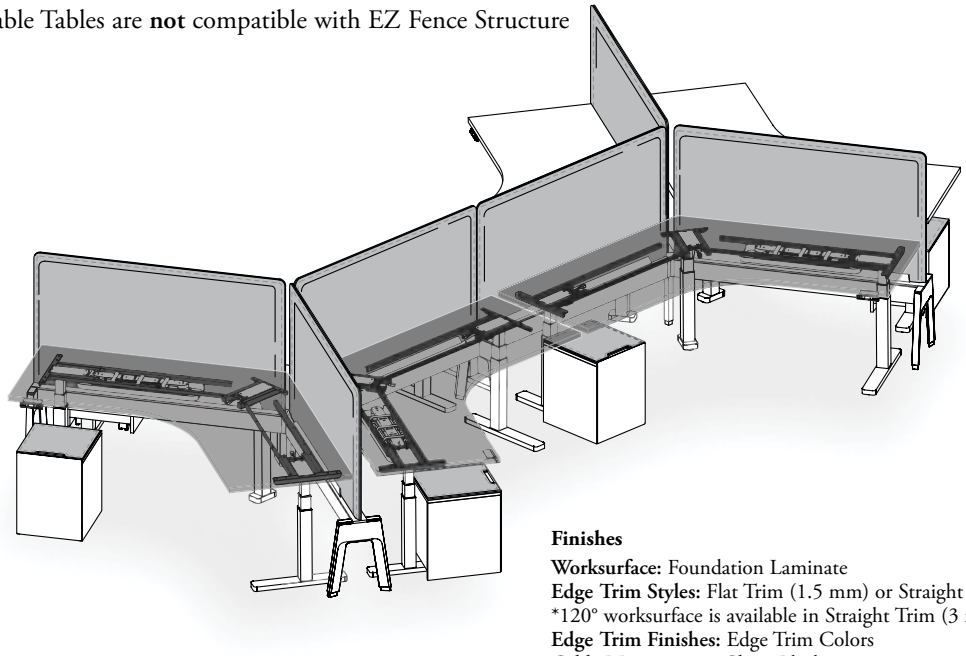

Finishes
Worksurface: Foundation Laminate
Edge Trim Styles: Flat Trim (1.5 mm) or Straight Trim (3 mm)*
*120° worksurface is available in Straight Trim (3 mm) style only
Edge Trim Finishes: Edge Trim Colors
Cable Management Clips: Black

- Can be specified for C-Leg application (CC) only
- Comes with 1 3/16" thick laminate worksurface
- Nine Cut-Out styles are available: Diamond & Square – Left (CL), Diamond & Square – Right (CR), Diamond – Center (DC), Diamond – Left (DL), Diamond – Right (DR), None (NN), Square – Center (SC), Square – Left (SL) or Square – Right (SR)
- Can be specified with Pre-Installed Connection Kit (P) only
- Available with Curved or Standard corner detail

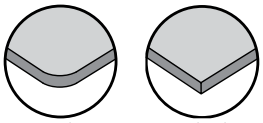

Curved (C) **Standard (S)**

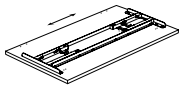

hiSpace Rectangular Worksurface with Quick Connect Kit (JNXRW)

- Available in widths from 46" to 70" (3" increments)
- Available in 23" or 29" depth
- Four Single Wire Management Clips are included

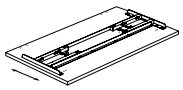

hiSpace Rectangular Worksurface with Quick Connect Kit – Cross Grain (JNXCRW)

- Available in widths from 46" to 58" (3" increments)
- Available in 23" or 29" depth
- Four Single Wire Management Clips are included

hiSpace 120° Worksurface with Quick Connect Kit (JNXV)

- Available in width A and width B from 43" to 58" (3" increments)
- Available in 23" or 29" depth A or depth B
- Six Single Wire Management Clips are included

worksurface for navigate base basics

Worksurfaces are available for Navigate Height-Adjustable Base – Rectangular or 120°.

- A Navigate Height-Adjustable Table consist of two components: worksurface and base which are ordered separately
- A Modesty Panel **cannot** be installed under a Navigate Height-Adjustable Table
- All dimensions are actual sizes to allow for propper gapping between worksurfaces or structure
- 120° Height-Adjustable Tables are **not** compatible with EZ Fence Structure

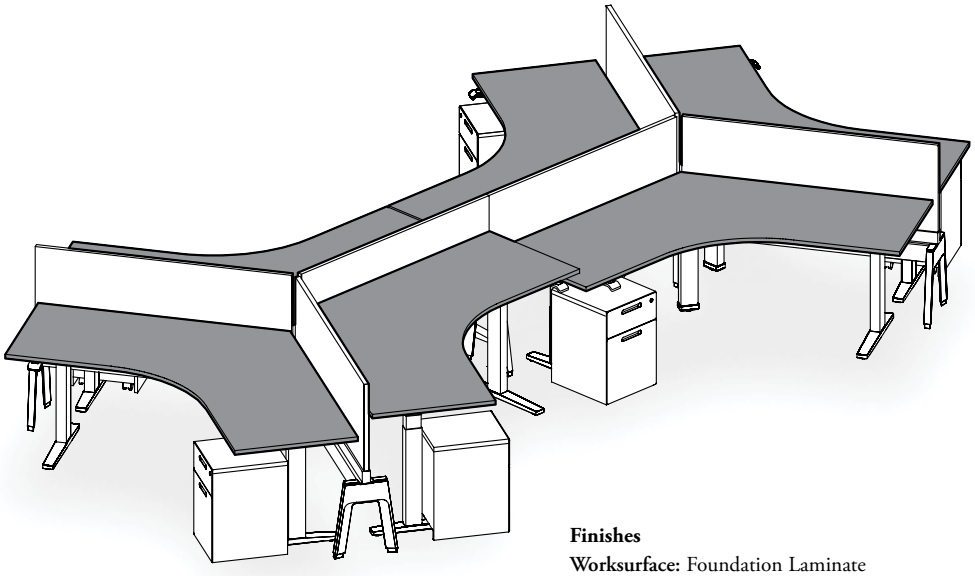

Finishes
Worksurface: Foundation Laminate
Edge Trim Styles: Flat Trim (1.5 mm) or Straight Trim (3 mm)*
*120° worksurface is available in Straight Trim (3 mm) style only
Edge Trim Finishes: Edge Trim colors
Cable Management Clips: Black

- Comes with 1 3/16" thick laminate worksurface
- Nine Cut-Out styles are available: Diamond & Square – Left (CL), Diamond & Square – Right (CR), Diamond – Center (DC), Diamond – Left (DL), Diamond – Right (DR), None (NN), Square – Center (SC), Square – Left (SL) or Square – Right (SR)
- Available with Curved or Standard corner detail

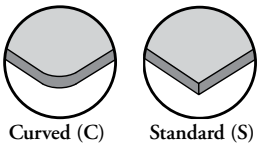

Curved (C) **Standard (S)**

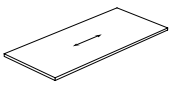

Rectangular Worksurface for Navigate Base (JNHWRF)

- Rectangular worksurface style can be specified for C- (CC) or T-Leg (TT) application depending of the worksurface depth
- Available in widths from 46" to 82" (3" increments)
- Available in 23" or 29" depth
- Four Single Wire Management Clips are included

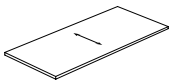

Rectangular Worksurface for Navigate Base – Cross Grain (JNHCWRF)

- Rectangular worksurface style can be specified for C- (CC) or T-Leg (TT) application depending of the worksurface depth
- Available in widths from 46" to 58" (3" increments)
- Available in 23" or 29" depth
- Four Single Wire Management Clips are included

120° Worksurface for Navigate Base (JNHV)

- 120° worksurface style can be specified for C-Leg application (CC) only
- Available in width A and width B from 43" to 64" (3" increments)
- Available in 23" or 29" depth A or depth B
- Six Single Wire Management Clips are included

planning with hispace or navigate worksurfaces

hiSpace or Navigate Worksurfaces require special dimensional considerations.

- Worksurface width must be specified according with the Desk or EZ Fence Structure height and configurations
- All worksurfaces must have a minimum of 1" clearance around the sides and back for safety reasons
- The use of Elevated Screen – Height-Ajustable Table Mounted may require the use of smaller worksurface width

worksurface clearance – standard height ez fence structure application

Rectangular Worksurface – EZ Fence Legs Application

When used with a EZ Fence Structure (no matter the fence height), the worksurface width must be reduced by 2" from nominal EZ Fence Beam width to allow proper clearance between worksurfaces. Refer EZ Fence Structure section for more details

Example: 72" wide EZ Fence Beam equal 70" wide worksurface

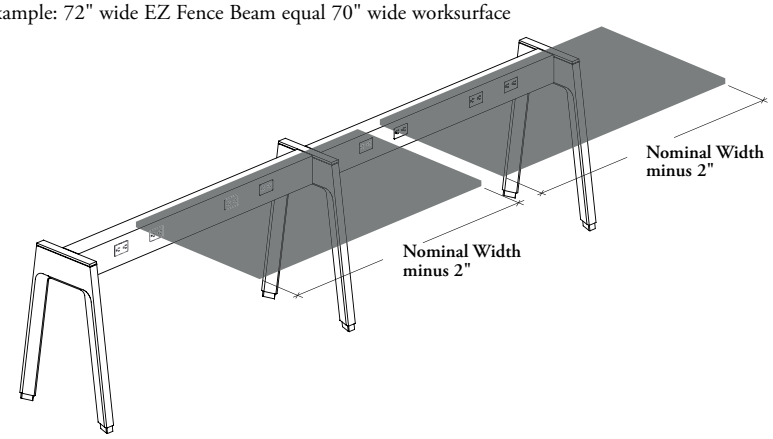

Rectangular Worksurfaces only

worksurface clearance – low-height desk or ez fence structure application

Rectangular or 120° Worksurface – Double-Sided Application

Due to the low height of desk structure, the worksurface width must be reduced by 2" from nominal Structural Beam width to allow proper clearance between worksurfaces

Example: 72" wide Structural Beam equal 70" wide worksurface

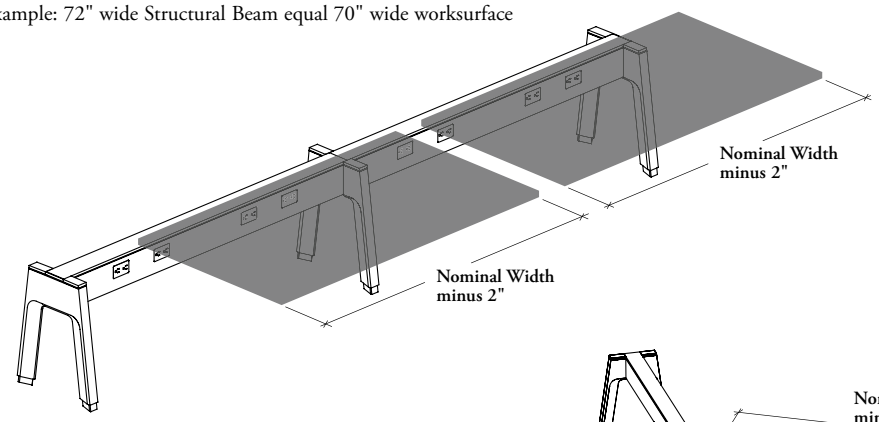

Rectangular Worksurfaces

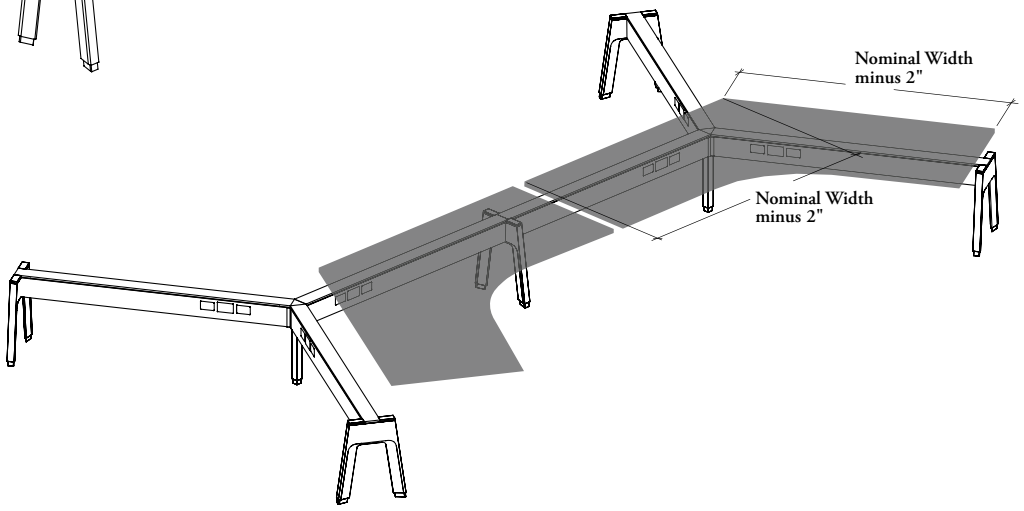

120° Worksurfaces

planning with hispace or navigate worksurfaces (continued)

worksurface clearance – standard height desk structure application

Due to the standard height of desk structure, the worksurfaces can interfere with desk structure. hiSpace or Navigate Worksurfaces used parallel to the Structural Beam must be reduced in width depending of their position in the desk structure to allow proper clearance from structure components

Rectangular Worksurface – Double-Sided Structural Legs and Structural Beam Application

For a Height-Adjustable Table placed between Structural Legs (end or in-line position) and for a Height-Adjustable Table placed beside a Double-Sided Structural Beam, the worksurfaces width must be reduced by 5" from nominal Structural Beam width

Example: 72" wide Structural Beam equal 67" wide worksurface

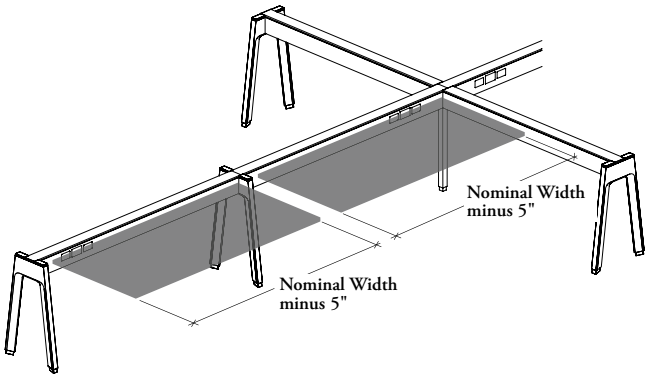

Rectangular Worksurface – Single-Sided Structural Beam Application

For a Height-Adjustable Table placed beside a Single-Sided Structural Beam, the worksurfaces width must be reduced by 8" from nominal Structural Beam width

Example: 72" wide Structural Beam equal 64" wide worksurface

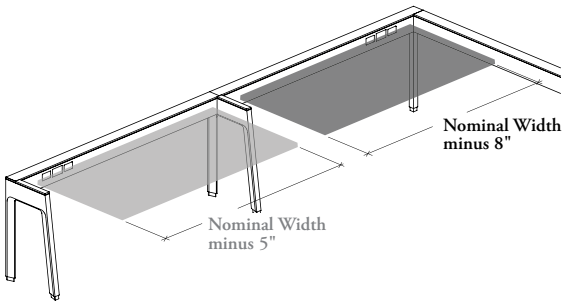

The following example show the **actual gaps** between desk structure and Height-Adjustable Table. **NOTE:** When Elevated Screens for Height-Adjustable Table are mounted on back edge, the side gaps are **not** affected

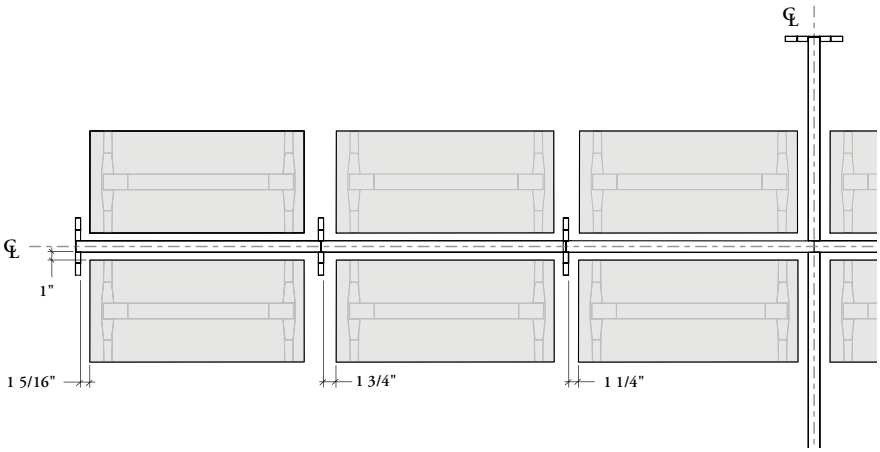

Rectangular Worksurface Restriction

Rectangular Height-Adjustable Tables **cannot** be placed between two Structural Legs – End. A minimum of two Structural Beams are required to allow 1" minimal clearance between furniture

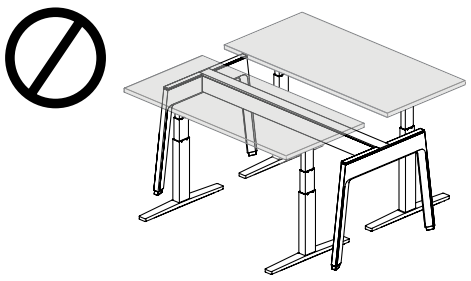

planning with hispace or navigate worksurfaces (continued)

worksurface clearance – standard height desk structure application (continued)

Rectangular Worksurface with Beam-Mounted Cabinet – Double-Sided Application

When Height-Adjustable Tables are placed between Structural Legs (end (shown) or in-line position) or a Double-Sided Structural Beam, and beside a Beam-Mounted Cabinet (single- or double-sided) the worksurfaces width must be reduced by 14" from nominal Structural Beam width

Example: 72" wide Structural Beam equal 58" wide worksurface

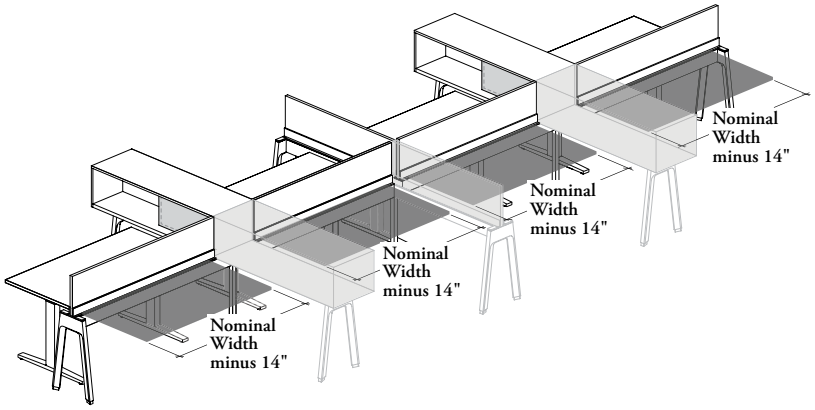

Rectangular Worksurface with Beam-Mounted Cabinet – Single-Sided Application

When Height-Adjustable Tables are placed between a Single-Sided Structural Beam and a Beam Mounted Cabinet (single- or double-sided), the worksurfaces width must be reduced by 17" from nominal Structural Beam width

Example: 72" wide Structural Beam equal 55" wide worksurface

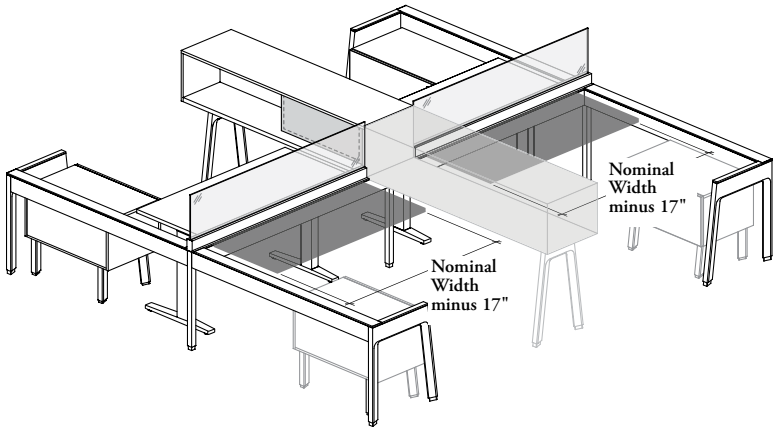

The following example show the actual gaps between desk structure and Height-Adjustable Table. **NOTE**: When Elevated Screens for Height-Adjustable Table are mounted on back edge, the side gaps are **not** affected

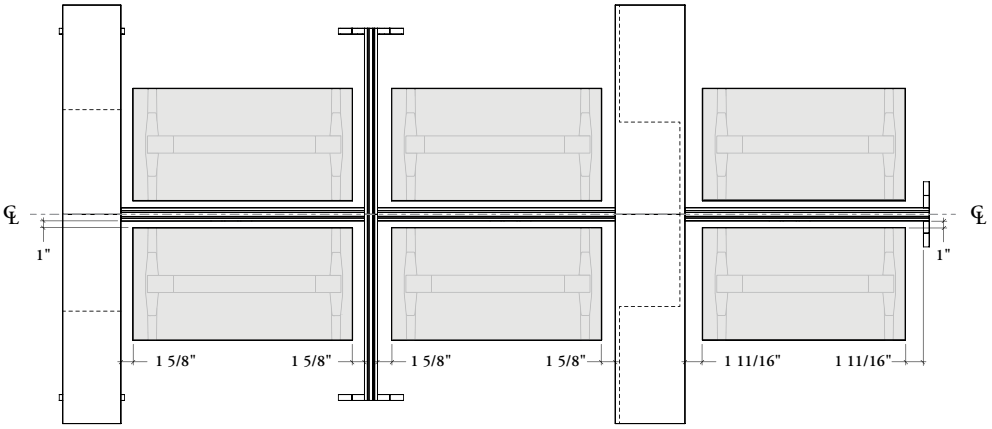

Rectangular Worksurface with Writable Glass Worksurface – Center Beam-Mounted

When combined with Writable Glass Worksurface – Center Beam-Mounted, Height-Adjustable Table width must be reduced by the support on each side and the excess of Writable Glass Worksurface overlapping on the beam

Example: 72" wide Structural Beam minus 5" (between Structural Legs), minus 3"(overlapping worksurface) equals 64" wide worksurface

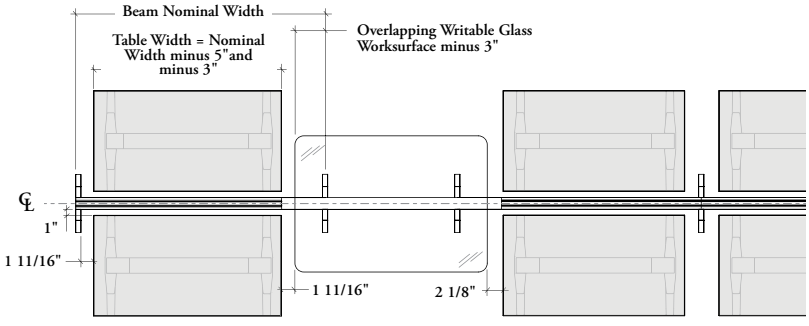

planning with hispace or navigate worksurfaces (continued)

worksurface clearance – standard height desk structure application (continued)

120° Worksurface – Double-Sided Application

For a Height-Adjustable Table placed between Structural Legs (end or in-line position) and for a Height-Adjustable Table placed beside a Double-Sided Structural Beam, the worksurfaces width must be reduced by 5" from nominal Structural Beam width to allow clearance between desk structure

Example: 66" wide Structural Beam equal 61" wide worksurface

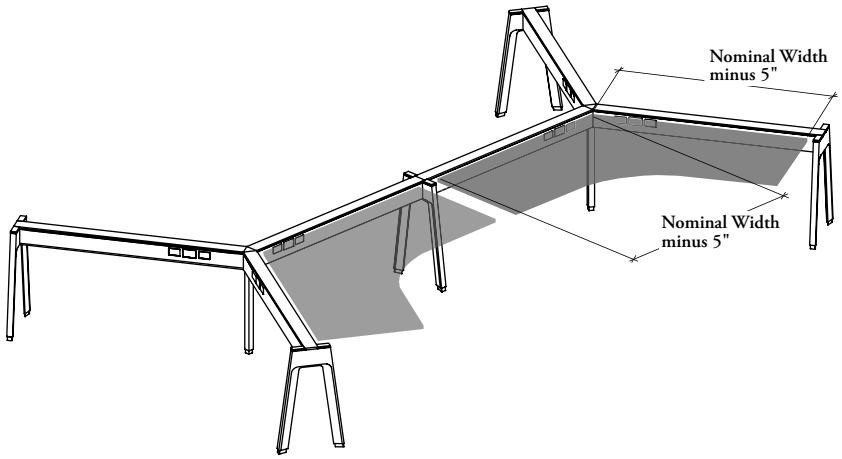

The following example show the actual gaps between desk structure and Height-Adjustable Tables. **Note:** When Elevated Screens for Height-Adjustable Table are mounted on back edge, the side gaps are reduced

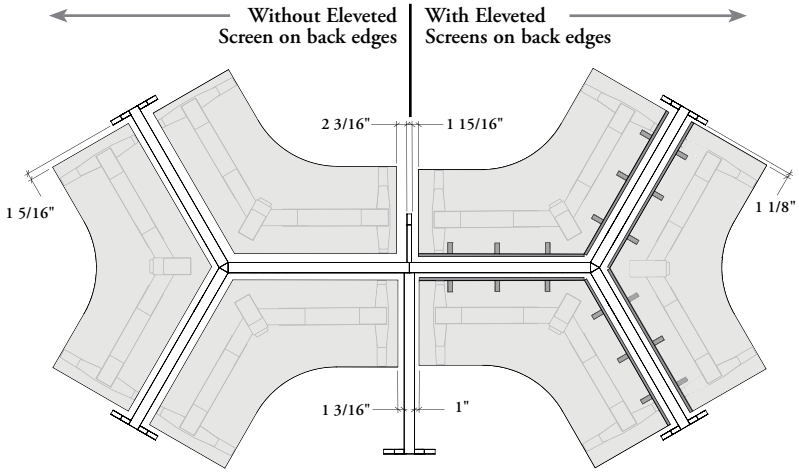

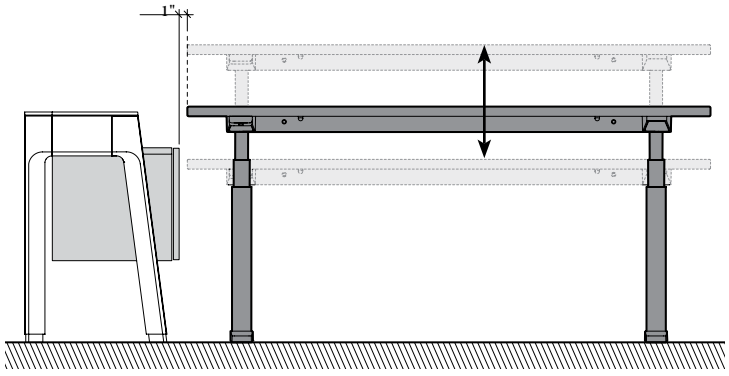

- All worksurfaces must have a 1" clearance around the sides and back for safety reasons
- When planning with freestanding, suspended or semi-supended credenza, the Height-Adjustable Table must be positioned at least 1" from credenza to avoid collision

planning with worksurface cut-outs for hispace or navigate height-adjustable tables

The following should be considered when planning cut-out positions on Height-Adjustable Table.

- Cut-outs provide easy and aesthetically pleasing pass-through wire management beneath a worksurface
- All worksurfaces are available with factory-made cut-outs
- Two cut-out options are available:

diamond shaped cut-out

- Provides an opening for routing electrical wiring and communication cables through the worksurface and allows the installation of MAST and Swerv Monitor Arms
- Diamond cut-out can be closed with a **Rectangular Grommet (JNEGR)** that can be specified separately. For more details, refer to Lighting, Electrics or Communications section

square shaped cut-out

- Provides an opening for routing electrical wiring and communication cable through the worksurface
- Allows the installation of Power Qubes that provides direct access to power/data and or USB charger ports above the worksurface
- **Dual or Quad Power Qube (JNEPC)** must be specified to complete the installation. For details, refer to the Lighting, Electrics & Communications section
- Comes with grommet ring and comes in Coordinate Soft Gris only
- Square cut-out can be closed with a **Square Grommet (JNEGQ)** that can be specified separately. For more details, refer to Lighting, Electrics or Communications section

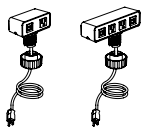

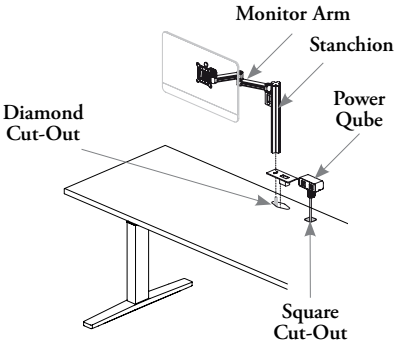

MAST and Swerv Monitor Arms

- Are designed for various levels of technology support (see Complements products)
- A MAST Monitor Arm for Expansion Grommet (mounting option 5) or a Swerv Monitor Arm for Diamond Grommet (mounting option 4) can be placed in the Diamond Cut-Out on worksurfaces
- A maximum of two monitors can be mounted on a Height-Adjustable Table
- MAST Stanchions are limited to single height only
- When a Monitor Arm is used in combination with a back screen, there may be an interference. Refer to specification software to validate the compatibility

- **NOTE**: Swerv IC (YMSZ) (Integrated Cerebro) can be in interference with other furniture depending of the workstation planning. Contact Teknion's Technical Support to validate the workstation planning

planning with worksurface cut-outs for hispace or navigate height-adjustable tables (continued)

cut-out locations

- Cut-outs will always be 3 1/2" from the back edge of the worksurface height-adjustable table
- **Not** all configurations are available depending of the worksurface width, for details refer to individual product pages

Rectangular Worksurface (JNXRW, JNXCRW, JNHWRF or JNHCWRF)

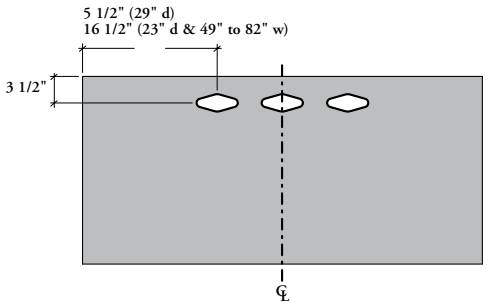

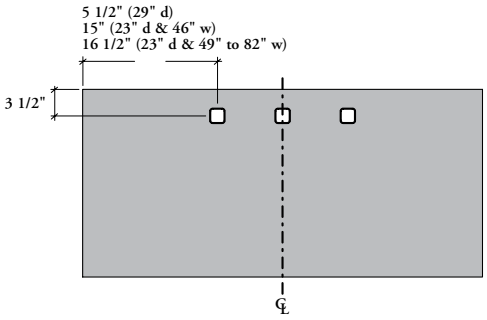

Nine cut-out styles are available:

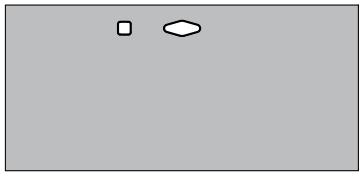

Diamond & Square Cut-Outs – Left (CL)

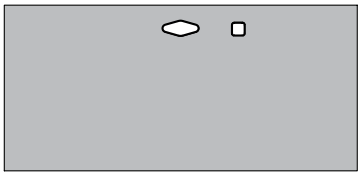

Diamond & Square Cut-Outs – Right (CR)

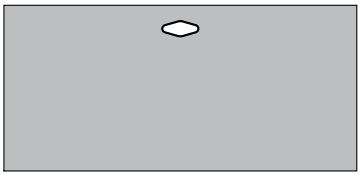

Diamond Cut-Out – Center (DC)

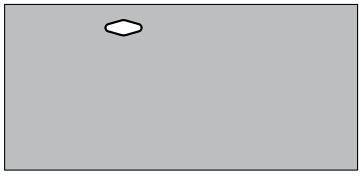

Diamond Cut-Out – Left (DL)

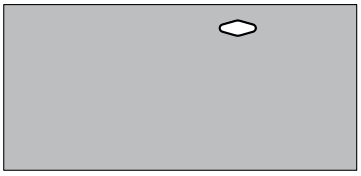

Diamond Cut-Out – Right (DR)

None (NN)

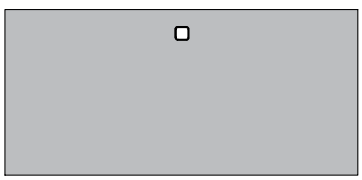

Square Cut-Out – Center (SC)

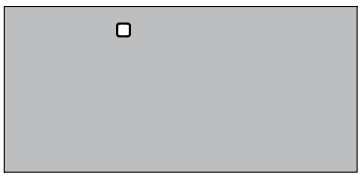

Square Cut-Out – Left (SL)

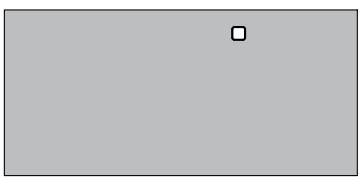

Square Cut-Out – Right (SR)

planning with worksurface cut-outs for hispace or navigate height-adjustable tables (continued)

cut-out locations (continued)

120° Worksurface (JNXV or JNHV)

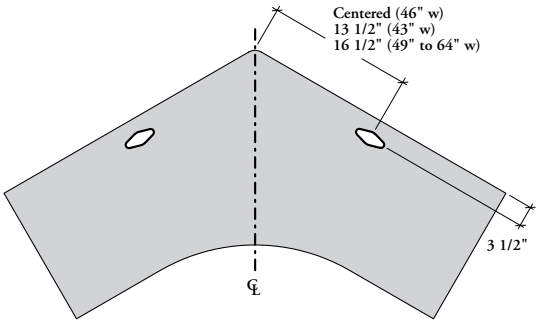

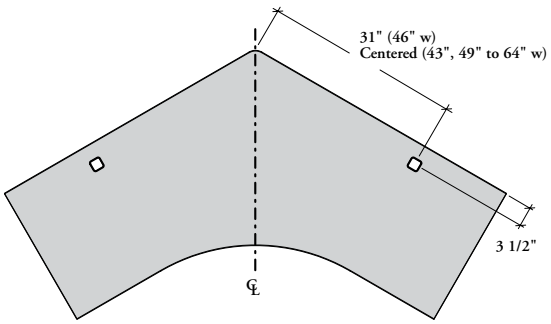

Seven cut-out styles are available:

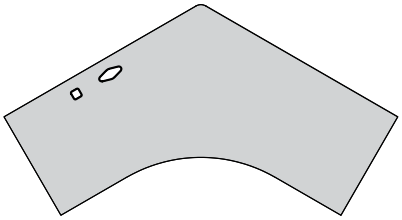

Diamond & Square Cut-Outs – Left (CL)

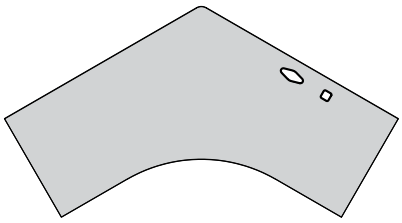

Diamond & Square Cut-Outs – Right (CR)

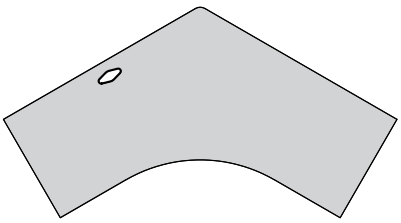

Diamond Cut-Out – Left (DL)

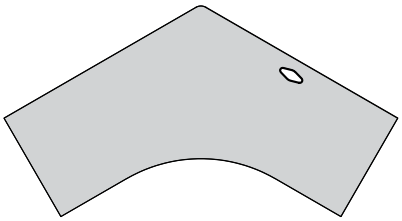

Diamond Cut-Out – Right (DR)

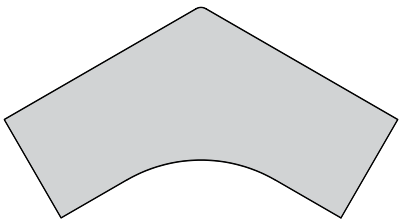

None (NN)

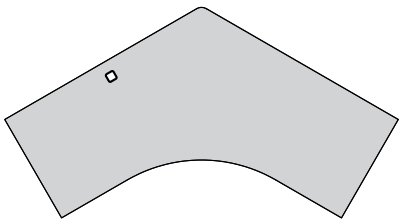

Square Cut-Out – Left (SL)

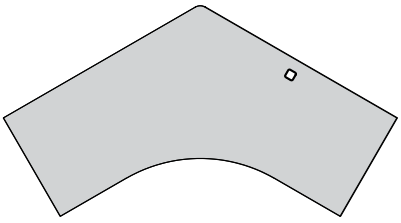

Square Cut-Out – Right (SR)

grain/pattern direction & edge trim styles – hispace or navigate worksurfaces

Attention to grain/pattern direction is important when planning worksurfaces.

- Grain direction is an important factor when planning workstation, if a different grain direction is required, please contact Teknion Customer Service Representative
- The pattern direction is **not** centered and grain direction can appear in different orientation from side-to-side worksurface
- Shading indicates specified edges, all other edges are 1.5 mm Flat Trim

worksurface grain/pattern direction and user edges

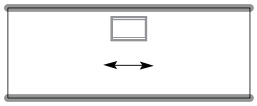

JNHB

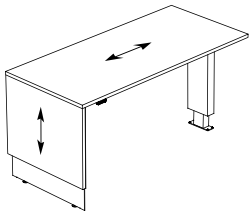

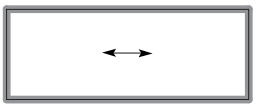

JNXRW or
JNHWRF

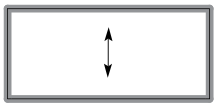

JNXCRW or
JNHCWRF

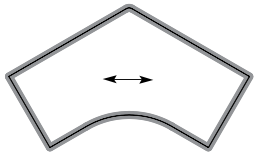

JNXV or
JNHV

hiSpace

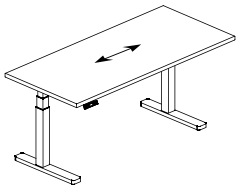

Navigate

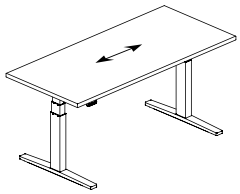

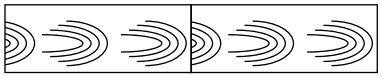

Laminate = = Grain Direction = 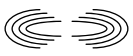

edges trim styles

		Foundation Laminate Surface
Flat (8) All Edges (**Not** available with 120° Worksurface and with worksurface with corner details)		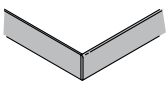
Straight (6) (All edges for hiSpace or Navigate Rectangular and 120° Height-Adjustable Worksurfaces) User edges for Height-Adjustable Run-Off – Bevel Base)	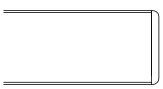	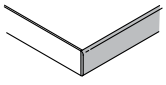

hispace quick connect height-adjustable mechanism basics

The following outlines the features of the hiSpace Quick Connect Height-Adjustable Mechanism.

- A hiSpace Height-Adjustable Table consists of two components: worksurface and height-adjustable mechanism which are ordered separately
- Casters **cannot** replace the Levelers included with height-adjustable legs

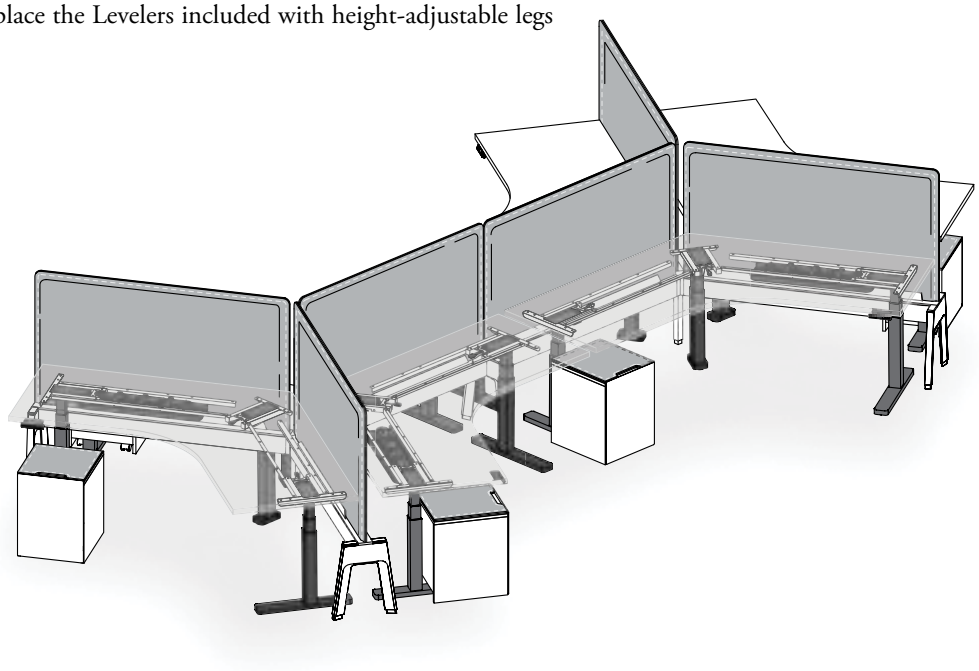

Finishes

Base Finish: Ebony, Platinum or Very White
Leveler Finish: Grey
Cable Organizer with Felt Cover Finish (if applicable): Grey

- Two Powerbar styles can be specified: External Powerbar (E) or None (N)
- Single Wire Management Clips are included with the worksurface. When Pre-Assembled Power Pak – Cable Organizer with Felt Cover is specified, it allows supplementary cable management for user cables. Other wire management solutions are available and can be ordered separately. For more details, refer to Lighting, Electrics & Communications section

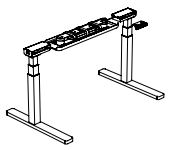

hiSpace Quick Connect Height-Adjustable Mechanism – Rectangular (JNXRMH)

- Comes with two height-adjustable legs with mechanisms
- Can be specified with C-Legs (CC) only
- Available in widths from 46" to 70" (3" increments)
- Available in 23" or 29" depth

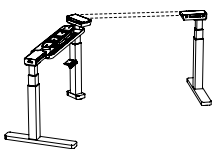

hiSpace Quick Connect Height-Adjustable Mechanism – 120° (JNXH)

- Comes with three height-adjustable legs with mechanisms
- Can be specified C-Legs (CC) only
- Available in widths A and widths B from 43" to 58" (3" increments)
- Available in 23" or 29" depth A and depth B

planning with hispace quick connect height-adjustable mechanisms

The following should be considered when planning with hiSpace Quick Connect Height-Adjustable Mechanism.

leg styles

- Only C-Leg type is available on hiSpace workstation tables
- Levelers have an adjustment range of 1/2"

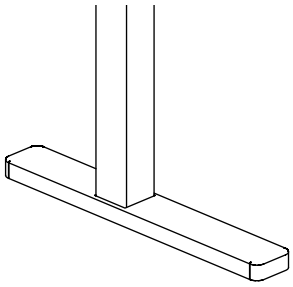

C-Leg (CC)

Two worksurface styles can be specified with this leg:

– hiSpace Rectangular Workurface with Quick Connect Kit (JNXRW and JNXCRW)

– hiSpace 120° Workurface with Quick Connect Kit (JNHV)

height-adjustment types

- Only an Electric Height-Adjustment Mechanism is available
- Display Switch with programmable memory setting push button activation or toggle activation
- Two Base Mechanism styles are available:
  – Extended Electric – Extended (22.6" to 48.7") (9E)
  – Extended Electric – with Riser (25" to 51.1") (9U)

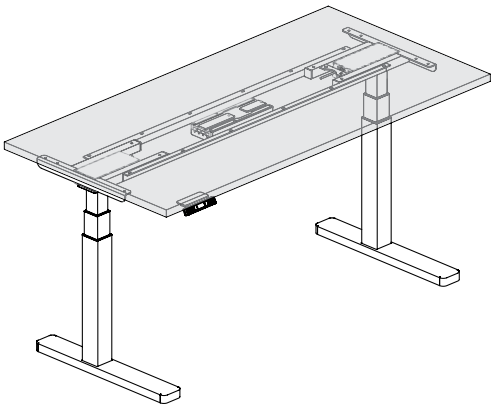

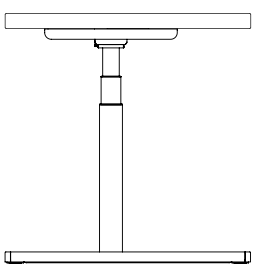

Extended Range Electric
– Extended

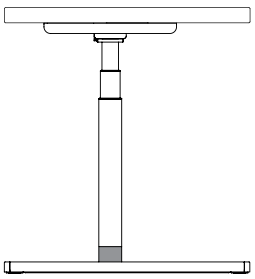

Extended Range Electric
– with Riser

For more details on Extended Range Electric, refer on page 367

planning with hispace quick connect height-adjustable mechanisms (continued)

Powerbars for hiSpace Height-Adjustable Table **cannot** be daisy chained

powerbar option with hiSpace mechanism

The following power options are available below the worksurface. Each can be specified as an option on hiSpace Quick Connect Height-Adjustable Mechanisms – Rectangular and 120°

Two powerbar styles are available:

– External Powerbar (E)
– None (N)

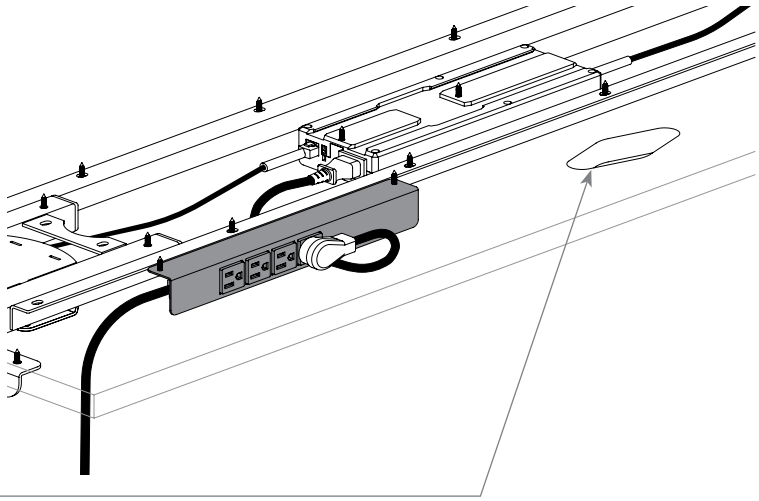

External Powerbar (E)

- Mounts outside the Stretcher Bars due to space restrictions
- Four outlets: Three open and one occupied with a control box power extension cable that provides power to the table controls
- Available with Rectangular or 120° Height-Adjustable Table
- The position of the powerbar will depend on the grommet option and the accessories (Screen Brackets, Monitor Arm, etc.) installed on the table

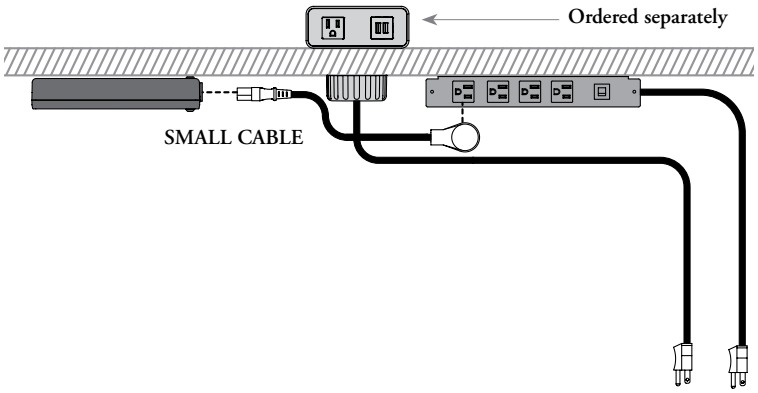

None (N)

- Powerbar can be added in the futur for a rectangular table mechanism in widths 52" to 82" for a 120° table mechanism in widths 49" to 64"

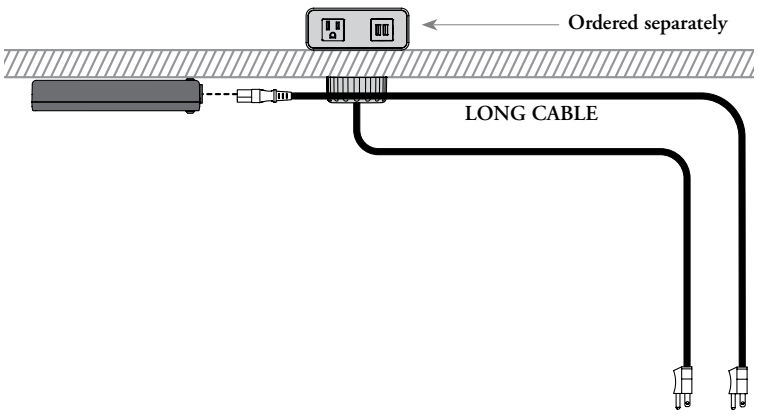

planning with width configurations for hispace quick connect height-adjustable mechanisms

The following should be considered when planning with Width Configurations for hiSpace Quick Connect Height-Adjustable Mechanisms.

- hiSpace Quick Connect Height-Adjustable Mechanisms are offered with two Width Configurations to respond to different applications
- The available knee space will vary depending on the depth and width of the hiSpace Worksurface, on the width configuration of the hiSpace Quick Connect Height-Adjustable Mechanism and also on accessories mounted under the worksurface
- For more details on Screen and Accessory applications, refer to respective section

standard width configuration

- Applicable with hiSpace Quick Connect Height-Adjustable Mechanism – Rectangular or 120°
- Only mounting style Height-Adjustable Table Frame Recessed (N) must be specified
- Only height-adjustable mechanism **Centered on Worksurface** is available
- Must be positioned between two struts of the table

The suspended personal storage **cannot** be mounted on the outside of the leg of a rectangular or 120° table

hiSpace Quick Connect Height-Adjustable Mechanism – Rectangular

With Pre-Assembled Power Pak – Cable Organizer with Felt Cover (P)

46" to 55" width configurations **cannot** be combined with a Cable Organizer with Felt Cover, because the storage will prevent the opening of the cover

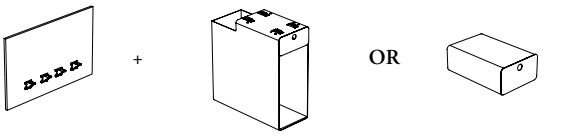

Elevated Screen – Height-Adjustable Table Mounted (lateral edges) or an Infinity Screen*

+ **Suspended Personal Storage** (JNAUODN or JNAUEDN)

OR **Drawer Module – Pocket** (JNAMDP)

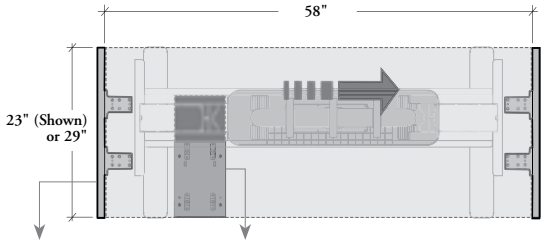

A Suspended Personal Storage can be combined with a Cable Organizer with Felt Cover, but the felt cover will need to be moved sideways under the 58" wide worksurface only

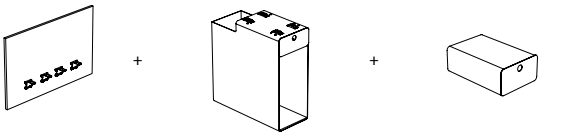

Elevated Screen – Height-Adjustable Table Mounted (lateral edges) or an Infinity Screen*

+ **Suspended Personal Storage** (JNAUODN or JNAUEDN)

+ **Drawer Module – Pocket** (JNAMDP)

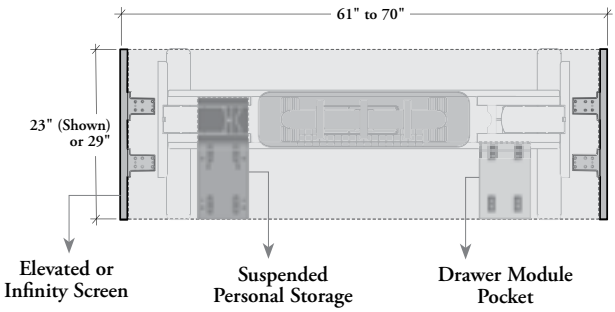

Suspended Personal Storage can be combined with a Centered Cable Organizer with Felt Cover without any interference

*For details on Infinity Screens, see Height-Adjustable Table Screens section

hiSpace Quick Connect Height-Adjustable Mechanism – 120°

With Knocked-Down Power Pak (K) or
With Pre-Assembled Power Pak – Cable Organizer with Felt Cover (P)

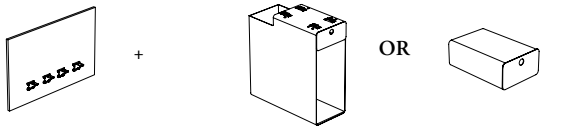

Elevated Screen –Height-Adjustable Table Mounted (lateral edges) or an Infinity Screen*

Not applicable with User Optimized Width configuration)

+ **Suspended Personal Storage** (JNAUODN or JNAUEDN)

OR **Drawer Module – Pocket** JNAMDP)

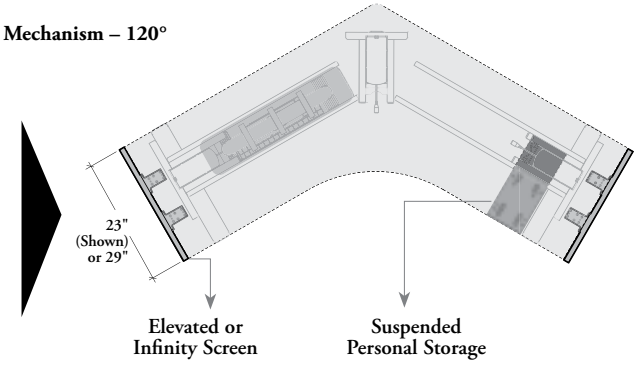

A Suspended Personal Storage can be installed under all 120° worksurface. The felt tray needs to be install on the opposite side of the Suspended Personal Storage

planning with width configurations for hispace quick connect height-adjustable mechanisms (continued)

user optimized width (accessory restriction) configuration

- Applicable with hiSpace Quick Connect Height-Adjustable Mechanism – Rectangular only
- Only height-adjustable mechanism **Centered on Worksurface** is available
- **No** Height-Adjustable Table Screen is allowed on side edges

With Pre-Assembled Power Pak – Cable Organizer with Felt Cover (P)

46" or 49" width configurations **cannot** be combined with a Cable Organizer with Felt Cover, because the storage will prevent the opening of the cover

hiSpace Quick Connect Height-Adjustable Mechanism – Rectangular

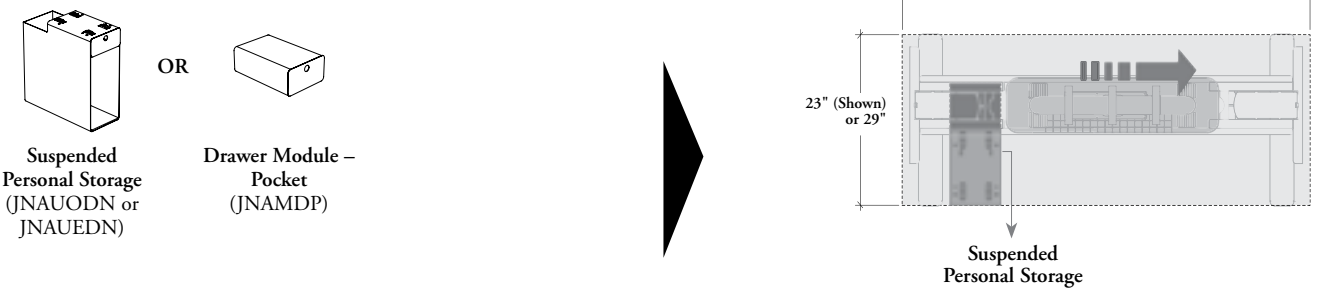

Suspended Personal Storage (JNAUODN or JNAUEDN)

Drawer Module – Pocket (JNAMDP)

Suspended Personal Storage

A Suspended Personal Storage can be combined with a Cable Organizer with Felt Cover, but the felt cover will need to be moved sideways under the 52" or 55" wide worksurface only

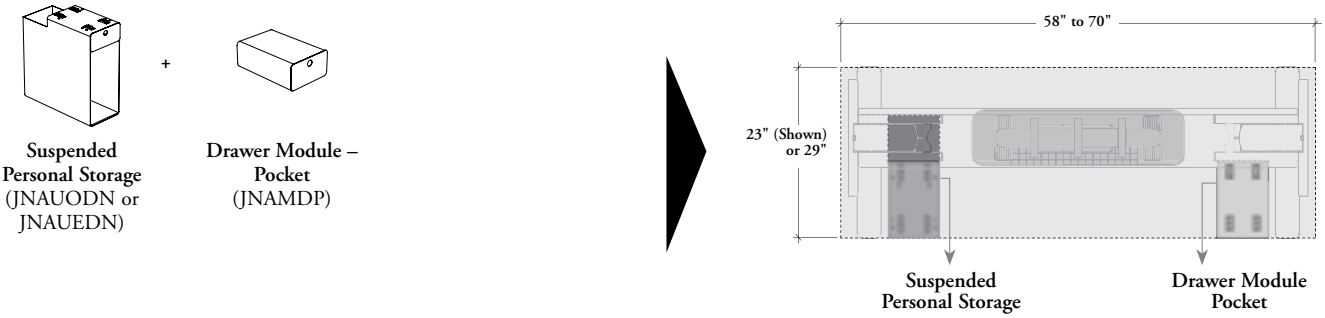

Suspended Personal Storage (JNAUODN or JNAUEDN)

Drawer Module – Pocket (JNAMDP)

Suspended Personal Storage

Drawer Module Pocket

Suspended Personal Storage can be combined with a Centered Cable Organizer with Felt Cover without any interference

standard width or user optimized width (accessory restriction) configuration

hiSpace Quick Connect Height-Adjustable Mechanism – Rectangular (Shown) or 120°

With Knocked-Down Power Pak (K)

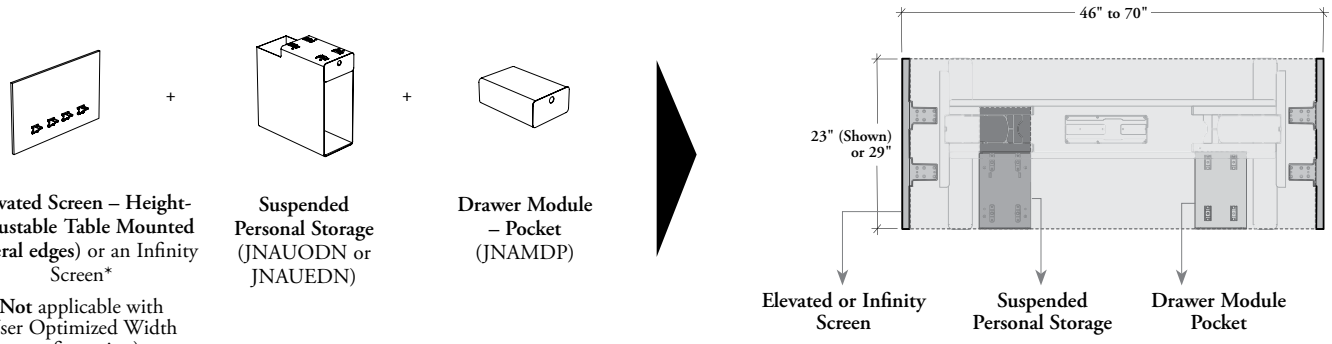

Elevated Screen – Height-Adjustable Table Mounted (lateral edges) or an Infinity Screen*

Not applicable with User Optimized Width configuration)

Suspended Personal Storage (JNAUODN or JNAUEDN)

Drawer Module – Pocket (JNAMDP)

Elevated or Infinity Screen

Suspended Personal Storage

Drawer Module Pocket

*For details on Infinity Screens, see Height-Adjustable Table Screens section

planning with height-adjustable table screens for hispace height-adjustable tables

The following should be considered when planning with Height-Adjustable Table Screens for hiSpace Height-Adjustable Tables.

Attention must be paid to the selection of height-adjustable table screen height and material to ensure the stability of hiSpace Height-Adjustable Tables

stability restrictions

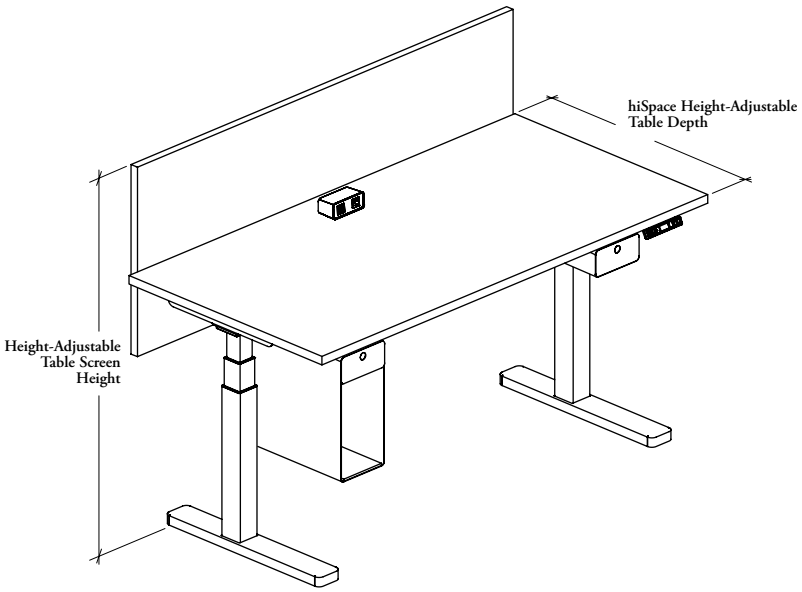

HISPACE HEIGHT-ADJUSTABLE TABLE DEPTH	HEIGHT-ADJUSTABLE TABLE SCREEN HEIGHT			
	42" high Glass Screen	51" high Glass Screen	42" high Other Substrates	51" high Other Substrates
23" deep on levelers	✓	No	✓	No
29" deep on levelers	✓	Restricted*	✓	✓

*Only the Glass Add-On Screens – Height-Adjustable Table Mounted are allowed

planning with hispace worksurfaces & quick connect height-adjustable mechanisms

The following should be considered with hiSpace Worksurfaces & Quick Connect Height-Adjustable Mechanism.

- The available knee space will vary depending on the depth and width of the worksurface
- The following chart outlines the distance between two struts/legs for each table width

space dimensioning for electric base

A = Distance between two struts, which increases as the table width increases

B = Distance between strut end to non-user edge of worksurface

C = Distance between stretcher bar to non-user edge of worksurface

D = Distance between stretcher bar to user edge of worksurface

rectangular worksurface with 23" deep C-Legs

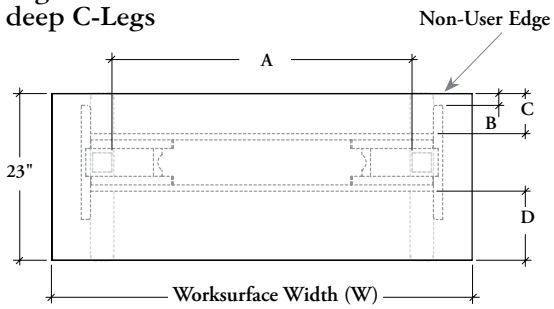

As worksurface width (W) increases to next size (+3"), (A) increases 3". (B), (C) and (D) remains consistent for all 23" deep C-Leg tables

	Worksurface Width (W)	Distance between... (A)	(B)	(C)	(D)
Standard Width	46"	29 1/4"	1 5/8"	6 1/4"	10 1/4"
User Optimized Width	46"	35 1/4"	1 5/8"	6 1/4"	10 1/4"
				Without Felt Tray	

rectangular worksurface with 29" deep C-Legs

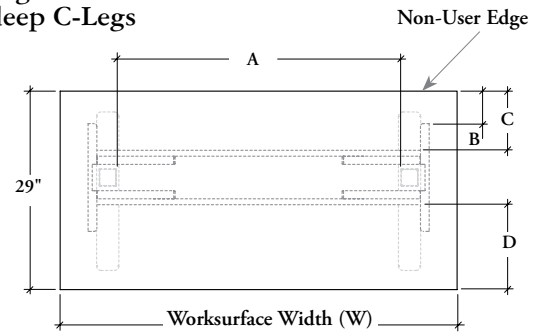

As worksurface width (W) increases to next size (+3"), (A) increases 3". (B), (C) and (D) remains consistent for all 29" deep C-Leg tables

	Worksurface Width (W)	Distance between... (A)	(B)	(C)	(D)
Standard Width	46"	29 1/4"	4 3/4"	9 3/8"	13 1/8"
User Optimized Width	46"	35 1/4"	4 3/4"	9 3/8"	13 1/8"
				Without Felt Tray	

120° worksurface with 23" deep C-Legs

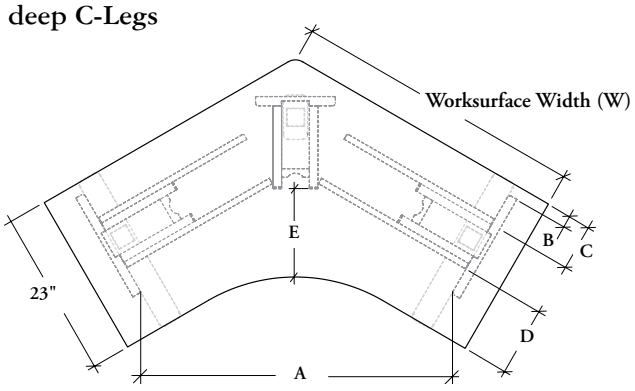

As worksurface width (W) increases to next size (+3"), (A) increases 5 3/16". (B), (C) and (D) remains consistent for all 23" deep C-Leg tables

	Worksurface Width (W)	Distance between... (A)	(B)	(C)	(D)	(E)
Standard Width	43"	47 3/4"	1 5/8"	6 1/4"	10 1/4"	13 1/8"
				Without Felt Tray		

120° worksurface with 29" deep C-Legs

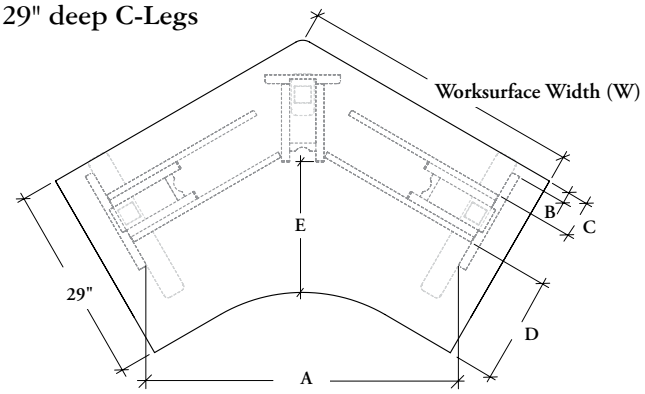

As worksurface width (W) increases to next size (+3"), (A) increases 5 3/16". (B), (C) and (D) remains consistent for all 29" deep C-Leg tables

	Worksurface Width (W)	Distance between... (A)	(B)	(C)	(D)	(E)
Standard Width	43"	47 3/4"	1 5/8"	6 1/4"	16 1/4"	20"
				Without Felt Tray		

navigate height-adjustable base basics

The following outlines the features of the Navigate Height-Adjustable Base.

A Navigate Height-Adjustable Table consists of two components: worksurface and base which are ordered separately

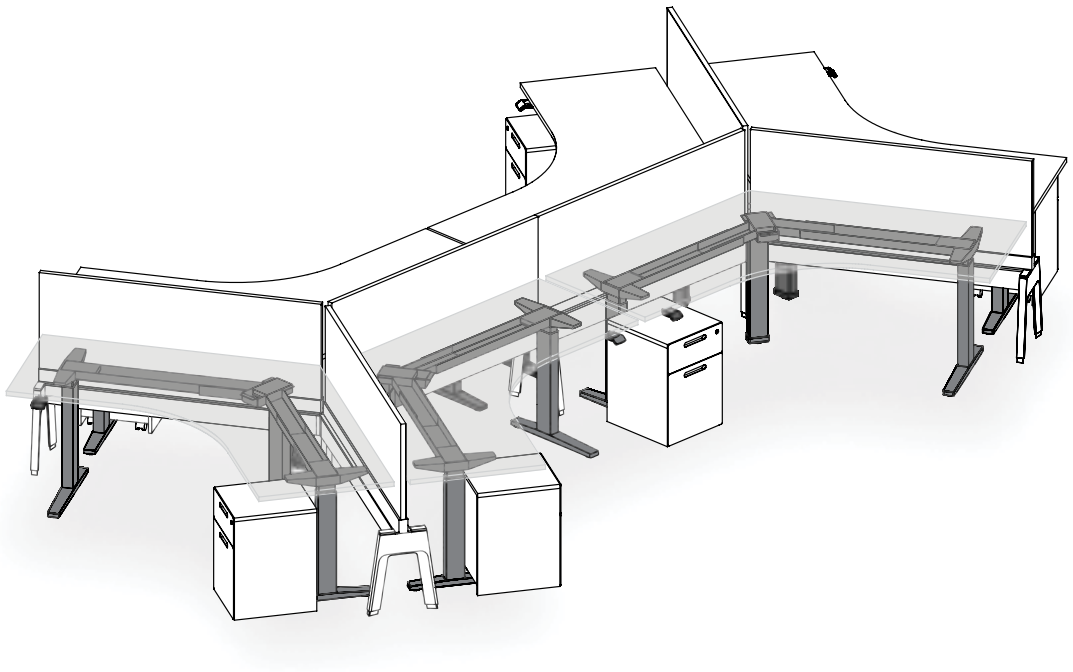

Finishes

Base Finish (leg bezels, worksurface struts and cross channel: Foundation, Mica and Accent
Leveler Finish: Grey

- Four Powerbar styles can be specified: External Powerbar (E), Frame Integrated Powerbar (I), Frame Integrated Powerbar with IEC Outlet (P) or None (N)
- No underworksurface cable management is provided with the table base. Single Wire Management Clips are included with the worksurface. Other wire management solutions are available and can be ordered separately. For more details, refer to Lighting, Electrics & Communications section

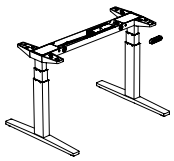

Navigate Height-Adjustable Base – Rectangular (JNHTRF)

- Comes with two height-adjustable legs with mechanisms
- Can be specified with T-Legs (TT) or C-Legs (CC)
- Available in widths from 46" to 82" (3" increments)
- Available in 23" or 29" depth

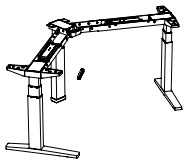

Navigate Height-Adjustable Base – 120° (JNTV)

- Comes with three height-adjustable legs with mechanisms
- Can be specified C-Legs (CC) only
- Available in widths A and widths B from 43" to 64" (3" increments)
- Available in 23" or 29" depth A and depth B

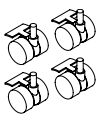

Height-Adjustable Table Caster Kit (JNHCA)

- Casters can replace the Levelers included with Navigate Height-Adjustable Legs only and can be specified separately
- Casters are lockable

Finish: Grey

planning with navigate height-adjustable bases

The following should be considered when planning with Navigate Height-Adjustable Bases.

leg styles

- Two leg-types are available on Navigate workstation tables:
  - T-Leg
  - C-Leg
- Levelers have an adjustment range of 1/4"

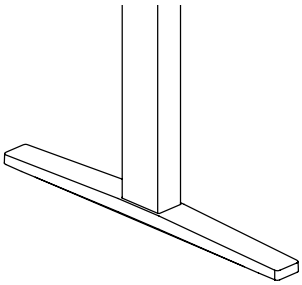

T-Leg (TT)

Only the following worksurface styles can be specified with this leg:

- Rectangular Workurface for Navigate Base (JNHWRF)
- Rectangular Workurface for Navigate Base – Cross Grain (JNHCWRF)

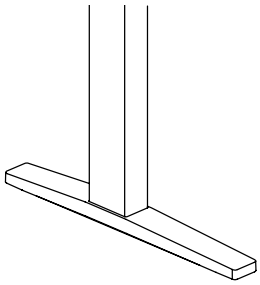

C-Leg (CC)

Only the following worksurface styles can be specified with this leg:

- Rectangular Workurface for Navigate Base (JNHWRF)
- Rectangular Workurface for Navigate Base – Cross Grain (JNHCWRF)
- 120° Workurface for Navigate Base (JNHV)

height-adjustment types

- Only a Electric Height-Adjustment Mechanism is available
- Display Switch with programmable memory setting push button activation **or toggle activation**
- Two Base Mechanism styles are available:
  - Extended Electric – Extended (22.6" to 48.7") (9E)
  - Extended Electric – Cityline Restricted (27.5" to 48.7") (9M)

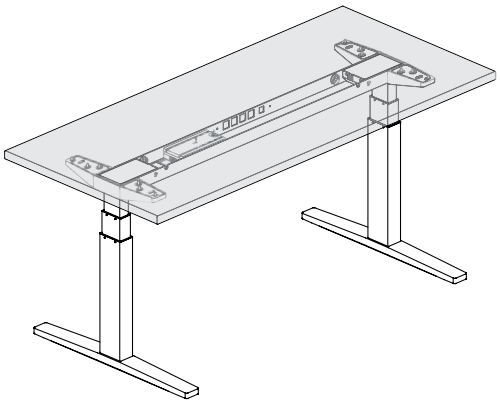

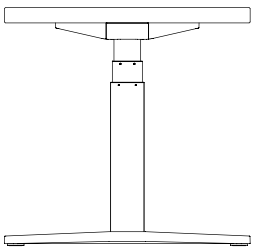

Extended Range Electric

- Extended
- Cityline Restricted

For more details on Extended Range Electric, refer on page 370

planning with navigate height-adjustable bases (continued)

Powerbars for Navigate Height-Adjustable Table **cannot** be daisy chained

base frame powerbar

The following options are available for base integrated power below the worksurface. Each can be specified as an option on Rectangular and 120° Navigate Height-Adjustable Bases

Four powerbar styles are available:

– External Powerbar (E)
– Frame Integrated Powerbar (I)
– Frame Integrated Powerbar with IEC Outlet (P)
– None (N)

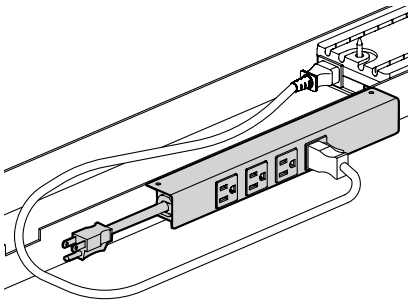

External Powerbar (E)

- Mounts outside the Cross Channel due to space restrictions
- Four outlets: Three open and one occupied with a control box power extension cable that provides power to the table controls
- Available in rectangular table base widths 46" and 49" only
- Available in 120° table base widths 43" and 46" only

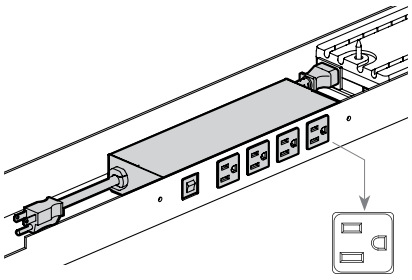

Frame Integrated Powerbar (I)

- Mounts inside the Cross Channel
- Four outlets and one internal cord that continues power through to the Control Box
- Available in rectangular table base widths 52" to 82"
- Available in 120° table base widths 49" to 64"

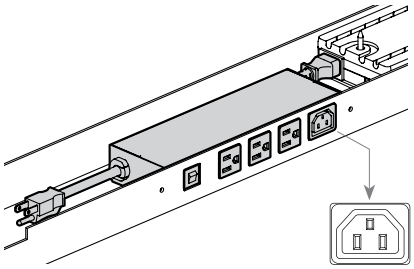

Frame Integrated Powerbar with IEC Outlet (P)

- Mounts inside the Cross Channel
- Three outlets, one IEC outlet and one internal cord that continues power through to the Control Box
- IEC Outlet allows installation of the Power Qube with IEC Connector option that reduces the cable management underneath a worksurface and also removes the cable management outside the table
- Available in rectangular table base widths 52" to 82"
- Available in 120° table base widths 49" to 64"

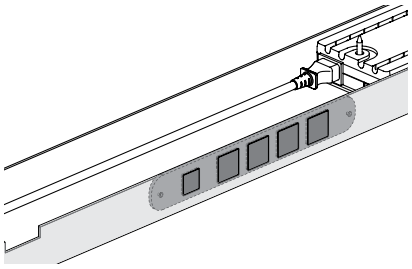

None (N)

- When None Powerbar (N) is specified, a cover will be in place where electrics can be added
- Powerbar can be added in the futur for a rectangular table base widths 52" to 82" or a 120° table base widths 49" to 64"

planning with width configurations for navigate height-adjustable bases

The following should be considered when planning with Width Configurations for Navigate Height-Adjustable Bases.

- Navigate Height-Adjustable Bases are offered with Width Configurations that can be placed at different positions on worksurface to respond to different applications
- The available knee space will vary depending on the depth and width of the Worksurface for Navigate Base, on the width configuration of the Navigate Height-Adjustable Base and also on accessories mounted on worksurface
- For more details on Height-Adjustable Table Screen and Accessory applications, refer to respective section

standard width configuration

- Applicable with Navigate Height-Adjustable Base – Rectangular or 120°
- Two positions are available:

– Centered on Worksurface
– Left or Right Recessed on Worksurface

Navigate Height-Adjustable Base – Rectangular

When base is **Centered on Worksurface**, it allows the mounting of:

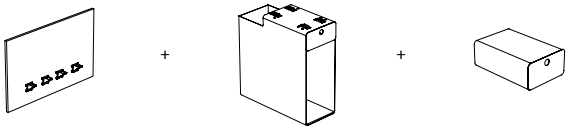

Elevated Screen – Height-Adjustable Table Mounted (lateral edges) or an Infinity Screen*

Suspended Personal Storage – Height-Adjustable Table Frame Recessed mounting style (JNAUODN or JNAUEDN)

Drawer Module – Pocket (JNAMDP) can be positioned between two struts

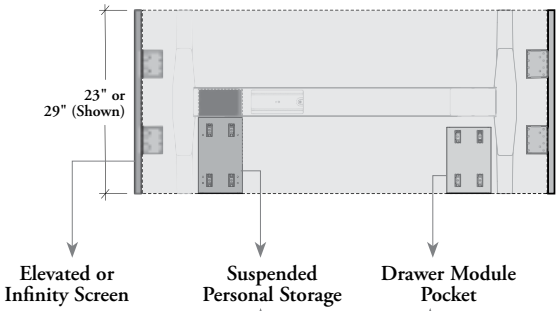

*For details on Infinity Screens, see Height-Adjustable Table Screens section

When base is **Left (Shown) or Right Recessed on Worksurface**, it allows the mounting of:

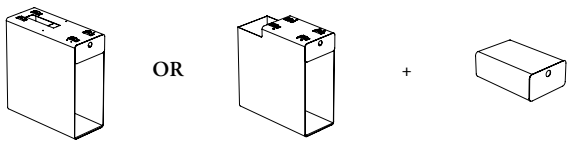

Suspended Personal Storage – Standard mounting style (JNAUODS or JNAUEDS) on recessed side

Suspended Personal Storage – Height-Adjustable Table Frame Recessed mounting style (JNAUODN or JNAUEDN) between two struts

Drawer Module – Pocket (JNAMDP) can be positioned on recessed side or between two struts

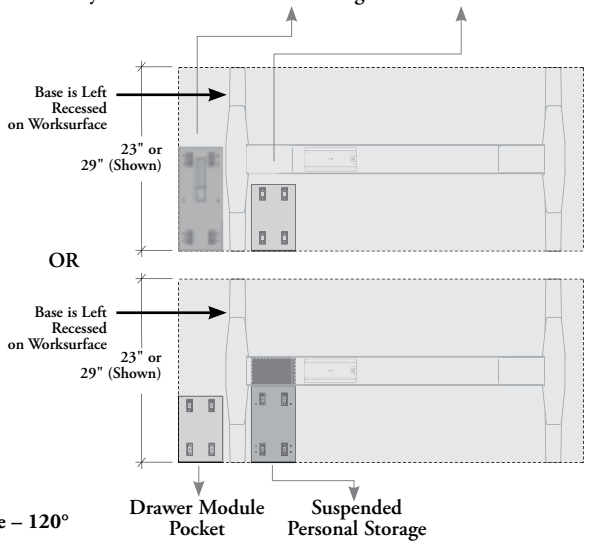

Navigate Height-Adjustable Base – 120°

When base is **Centered on Worksurface**, it allows the mounting of:

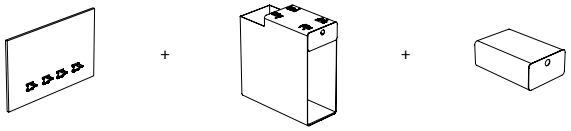

Elevated Screen – Height-Adjustable Table Mounted (lateral edges) or an Infinity Screen*

Suspended Personal Storage – Height-Adjustable Table Frame Recessed mounting style (JNAUODN or JNAUEDN)

Drawer Module – Pocket (JNAMDP) can be positioned between two struts

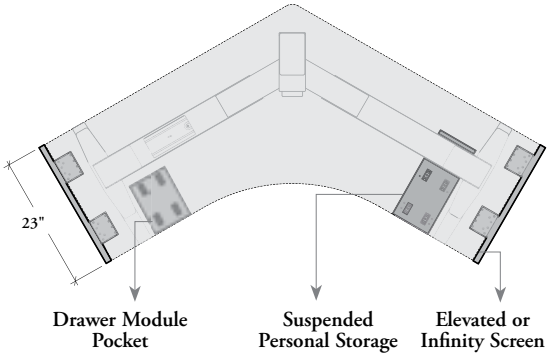

*For details on Infinity Screens, see Height-Adjustable Table Screens section

planning with width configurations for navigate height-adjustable bases (continued)

standard width configuration (continued)

Navigate Height-Adjustable Base – 120°

- Recessed side can be interchanged on site
- When base is **Left (Shown) or Right Recessed on Worksurface**, it allows the mounting of:

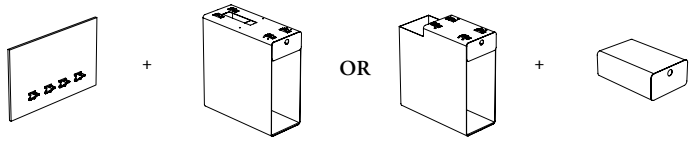

Elevated Screen – Height-Adjustable Table Mounted (lateral edges) or an Infinity Screen*

Suspended Personal Storage – Standard mounting style (JNAUODS or JNAUEDS) on recessed side

Suspnded Personal Storage – Height-Adjustable Table Frame Recessed mounting style (JNAUODN or JNAUEDN) between two struts (for 23" deep Worksurface only)

Drawer Module – Pocket (JNAMDP) can be positioned on recessed side or between two struts

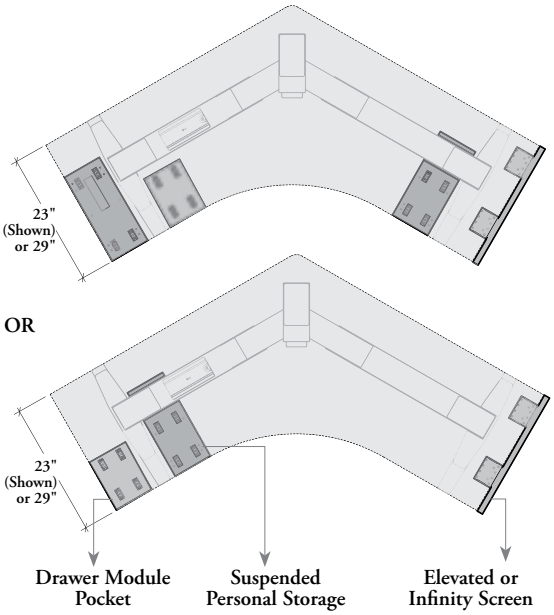

*For details on Infinity Screens, see Height-Adjustable Table Screens section

user optimized width (accessory restriction) configuration

- Applicable with Navigate Height-Adjustable Base – Rectangular only
- Only Centered on Worksurface position is available
- This base configuration gives 6" more in width for the user space than standard width configuration
- **No** Height-Adjustable Table Screen is allowed on side edges

Navigate Height-Adjustable Base – Rectangular

When base is **Centered on Worksurface**, it allows the mounting of:

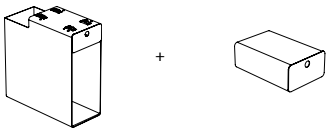

Suspended Personal Storage – Height-Adjustable Table Frame Recessed mounting style (JNAUODN or JNAUEDN)

Drawer Module – Pocket (JNAMDP) can be positioned between two struts

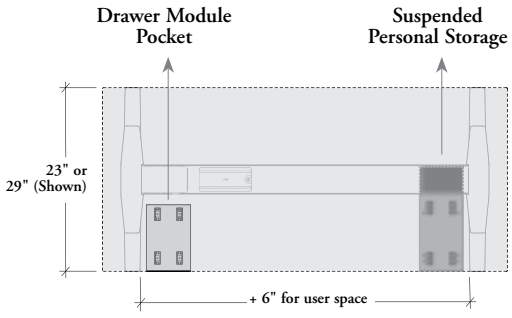

planning with height-adjustable table screens for navigate tables

The following should be considered when planning with Height-Adjustable Table Screens for Navigate Tables.

- Attention must be paid to the selection of screen height and material to ensure the stability of Navigate Height-Adjustable Tables
- For more details on Height-Adjustable Tables Mounted Elevated Screens restrictions, refer to Height-Adjustable Table Screens section

stability restrictions

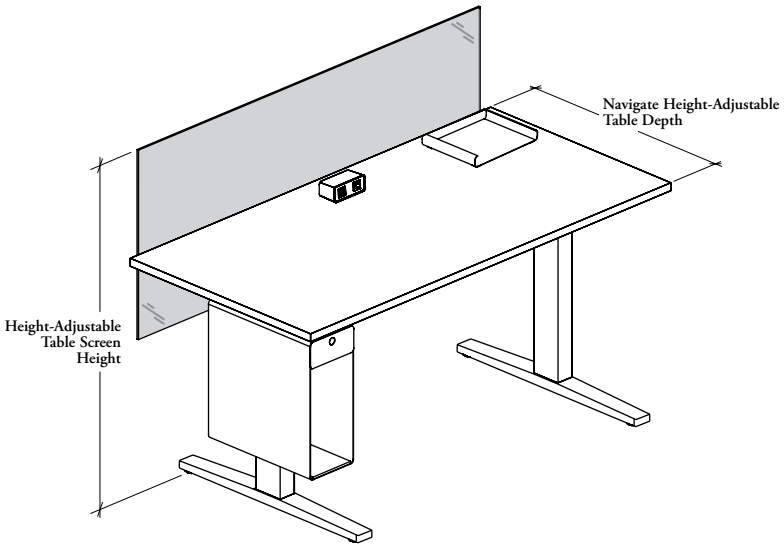

NAVIGATE HEIGHT-ADJUSTABLE TABLE DEPTH	HEIGHT-ADJUSTABLE TABLE SCREEN HEIGHT			
	42" high Glass Screen	51" high Glass Screen	42" high Other Substrates	51" high Other Substrates
23" deep on levelers	✓	No	✓	No
29" deep on levelers	✓	Restricted*	✓	✓
23" deep on casters	No	No	✓	No
29" deep on casters	✓	Restricted*	✓	✓

*Only the Glass Add-On Screens – Height-Adjustable Table Mounted are allowed

planning with worksurfaces & navigate height-adjustable bases

The following should be considered with Worksurfaces & Navigate Height-Adjustable Bases.

- The available knee-space will vary depending on the depth and width of the Worksurface for Navigate Base
- The following chart outlines the distance between two struts/legs for each table width

space dimensioning for electric base

A = Distance between two struts, which increases as the table width increases

B = Distance between strut end to non-user edge of worksurface

C = Distance between cross channel to non-user edge of worksurface

D = Distance between cross channel to user edge of worksurface

rectangular worksurface with 23" deep C-Legs

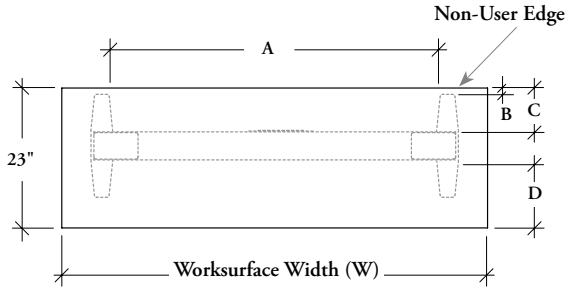

As worksurface width (W) increases to next size (+3"), (A) increases 3". (B), (C) and (D) remains consistent for all 23" deep C-Leg tables

	Worksurface Width (W)	Distance between... (A)	(B)	(C)	(D)
Standard Width	46"	30"	1"	7 1/4"	11 1/4"
User Optimized Width	46"	36"	1"	7 1/4"	11 1/4"

rectangular worksurface with 29" deep T-Legs

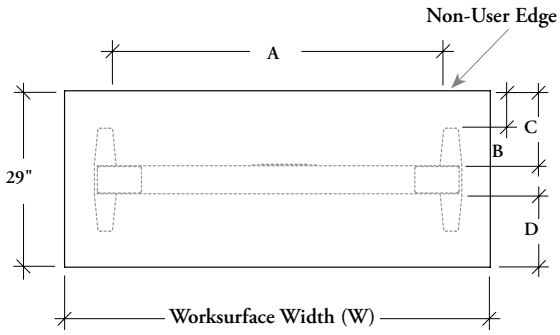

As worksurface width (W) increases to next size (+3"), (A) increases 3". (B), (C) and (D) remains consistent for all 29" deep T-Leg tables

	Worksurface Width (W)	Distance between... (A)	(B)	(C)	(D)
Standard Width	46"	30"	6"	12 1/4"	12 1/4"
User Optimized Width	46"	36"	6"	12 1/4"	12 1/4"

120° worksurface with 23" deep C-Legs

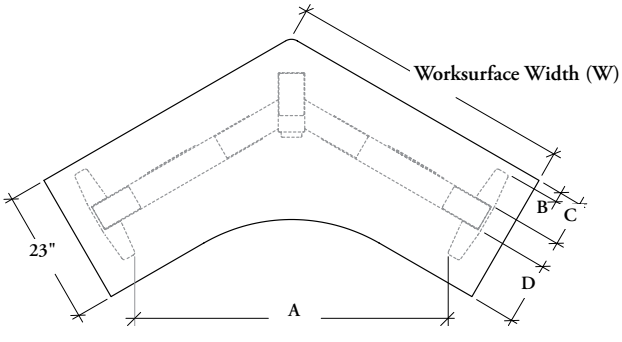

As worksurface width (W) increases to next size (+3"), (A) increases 5 3/16". (B), (C) and (D) remains consistent for all 23" deep C-Leg tables

	Worksurface Width (W)	Distance between... (A)	(B)	(C)	(D)
Standard Width	46"	48 1/2"	1"	7 1/4"	11 1/4"
Standard Width – Recessed on Left or Right	46"	46"	1"	7 1/4"	11 1/4"

120° worksurface with 29" deep C-Legs

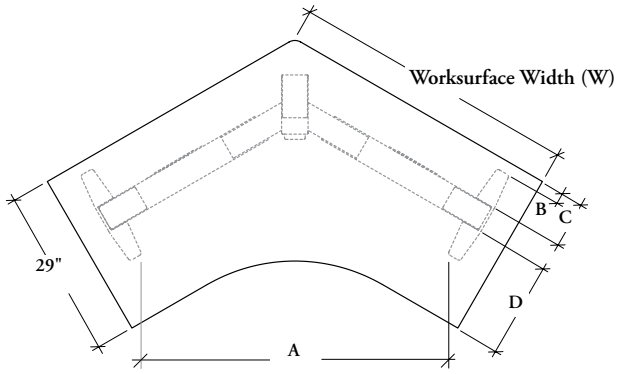

As worksurface width (W) increases to next size (+3"), (A) increases 5 3/16". (B), (C) and (D) remains consistent for all 29" deep C-Leg tables

	Worksurface Width (W)	Distance between... (A)	(B)	(C)	(D)
Standard Width	46"	48 1/2"	1"	7 1/4"	17 1/4"
Standard Width – Recessed on Left or Right	46"	46"	1"	7 1/4"	17 1/4"

wire management for hispace or navigate height-adjustable tables

wire management options

The following options are available for wire management below the worksurface

Wire management products included with a Navigate Height-Adjustable Table

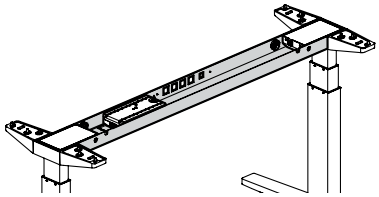

Cross Channel

- Routes Control Box cables inside the channel only
- Integrated on Navigate Height-Adjustable Base
- Non-user cables can be managed inside channel

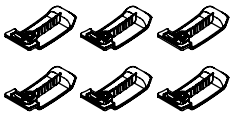

Single Wire Management Clips

- Manage and conceal power and data wire underneath the worksurface
- Four Single Wire Management Clips are included with Rectangular Worksurfaces for Navigate Base (JNHWRF or JNHCWRF)
- Six Single Wire Management Clips are included with 120° Worksurface for Navigate Base (JNTV)

Finish: Black

Wire management products included with a hiSpace Height-Adjustable Table

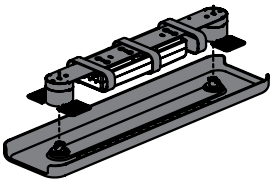

Pre-Assembled Power Pak – Cable Organizer with Felt Cover

- Provides a unique and residential solution for cable management under the worksurface
- Optional on hiSpace Height-Adjustable Mechanisms (JNXRMH or JNXH)
- Includes all the necessary hardware to wind the cables under the hiSpace worksurface
- The Control Box for the hiSpace table is pre-install inside Cable Organizer with Felt Cover
- **Not** available with 46" or 49" Standard Width for Rectangular Height-Adjustable Mechanism
- **Not** available with 43" or 46" Standard Width for 120° Height-Adjustable Mechanism
- Cable Organizer with Felt Cover can also be specified separately

Finish: Grey

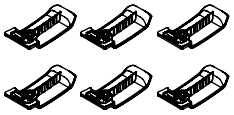

Single Wire Management Clips

- Manage and conceal power and data wire underneath the worksurface
- Four Single Wire Management Clips are included with hiSpace Rectangular Worksurfaces with Quick Connect Kit (JNXRW or JNXCRW)
- Six Single Wire Management Clips are included with hiSpace 120° Worksurface with Quick Connect Kit (JNXV)

Finish: Black

wire management for hispace or navigate height-adjustable tables (continued)

Wire management products not included Height-Adjustable Tables

Each product can be specified separately. Refer to Lighting, Electrics & Communications section, for more details

Dual Wire Management Clips (JNEWC)

- Manage and conceal power and data wire underneath the worksurface
- Open section is for big cables and flexbible section is for small cables

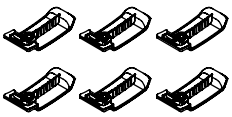

Single Wire Management Clips (JNEWCS)

Also available separately

Cable Tray (JNEWPT)

Is mounted underneath worksurface to manage cables coming from the worksurface level

Small Cable Organizer (01)

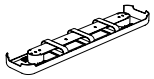

Large Cable Organizer (03)

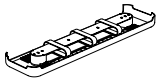

Cable Organizer with Felt Cover (JNEWYA)

- Two Configurations are available:
  - – Small Cable Organizer: 28" wide by 6" deep
  - – Large Cable Organizer: 28" wide by 7 1/2" deep

Finish: Grey

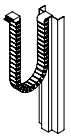

Vertical Wire Carrier (JNHEA)

- The vertical wire carries power and data cables from under worksurface to the floor
- Mounts to either leg of a height-adjustable base
- Three styles are available:

– Navigate Freestanding (NF)
– hiSpace – Standard Range (22.6" to 48.7") (HE)
– hiSpace – with Riser (25" to 51.1") (HU)

Finishes: Ebony Coordinate, Platinum Coordinate or Very White Coordinate

understanding storage cabinet for height-adjustable run-off

Storage Cabinet for Height-Adjustable Run-Off is mandatory to integrate height-adjustable workstation in Expansion Cityline.

storage cabinet

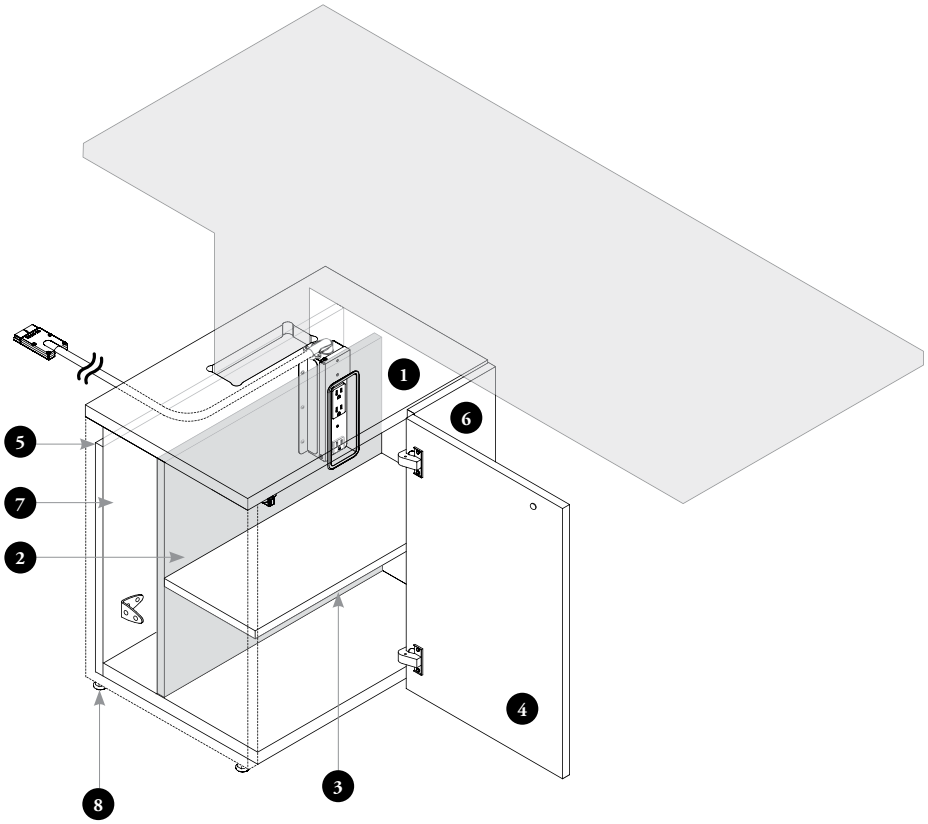

1. Case can be specified 24" high (actual size is 24 1/4")
2. **Storage Divider** comes with Cable Pass-Through cut-out to allow access to Power Module (JNEPMH). It is removable to allow the installation of Height-Adjustable Mechanism and Power Module
3. Comes with one **Adjustable Shelf** and have holes in 1 1/4" intervals on the inside walls for shelf height adjustment. This product will **not** allow storing two rows of standard letter-size binders. For inside clearance, see chart on page 408
4. **Front Door** comes with hinges allowing the door to open up to 94°. The hinged front door has no pull. It can be opened by the user activating the touch-latch. No lock available
5. **Back-Panel** is shortened to allow routing the connecting harness of the Power Module – Storage Cabinet for Height Adjustability (JNEPMH)
6. **Fixed Front Panel**
   - When 24" wide case is specified, comes with a 8 1/4" wide panel
   - When 30" wide case is specified, comes with a 10 1/4" wide panel
7. **Power Module – Storage Cabinet for Height-Adjustability**
   - Is mandatory, **not** included and must be specified separately. Mounts along the back-panel to provide power to Height-Adjustable Mechanism
   - Uses an i-Connector (JNEPIC) or a Four-Way Splitter (JNEPDB) to route current from main line
8. **Levelers** are included and provide an adjustment range of 3"

storage cabinet for height-adjustable run-off basics

Storage Cabinet for Height-Adjustable Run-Off provides built-in height-adjustability mounting capacity within Expansion Cityline workstations.

Storage Cabinet for Height-Adjustable Run-Off is mandatory under a Height-Adjustable Run-Off

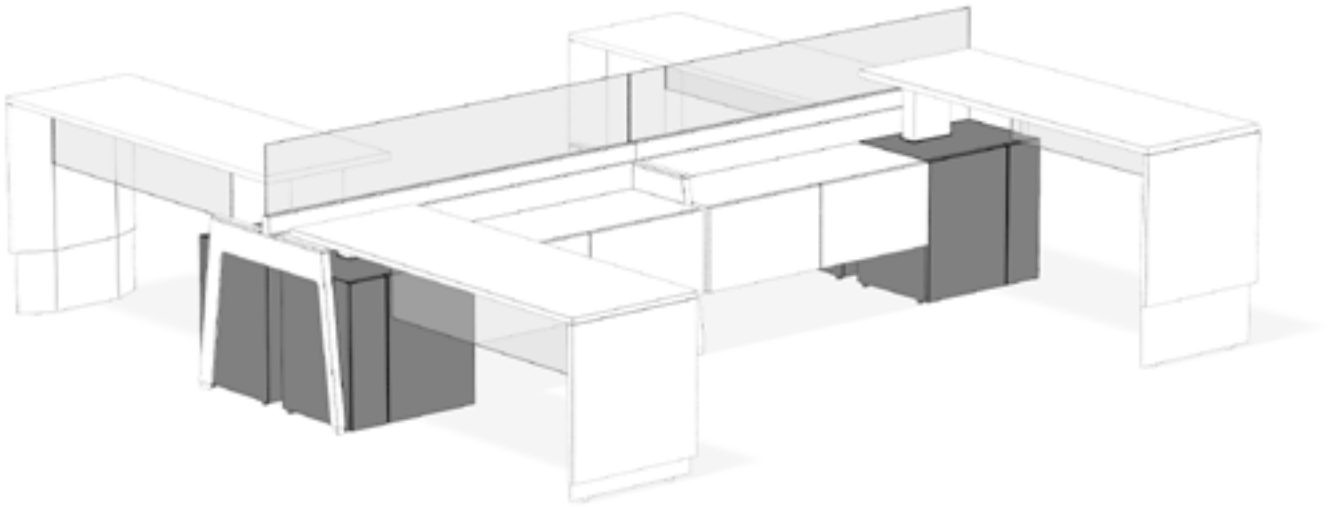

Finishes

Front Finish: Source Laminate and Foundation Laminate
Edge Trim Finishes: Edge Trim Colors
Case Finish: Source Laminate
Cable Pass-Through Ring: Platinum Coordinate

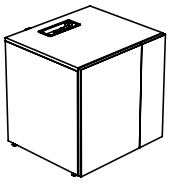

Storage Cabinet for Height-Adjustable Run-Off (JNHSC) EZ compatible

- Provides support and hides the Height-Adjustable Run-Off Mechanism
- Provides installation location for Power Module – Storage for Height Adjustability (JNEPMH) or Chicago Power Module – Storage for Height Adjustability (JNECPH)
- Can be specified with Single- (S) or Double-Sided (D) Structural Beam (JNDBB or JNDCB), EZ Fence Beam (JZSBB, JZSBS, JZSCB or JZSCS)
- Available 18" or 24" deep and 24" high
- Widths include 24" or 30"
- Can be specified Left or Right handed. Handedness is determined by the location of the fixed panel
- Can only be used for one Height-Adjustable Run-Off. For double-sided application, another Storage Cabinet must be specified
- Must be attached to a Structural Leg or EZ Structural Leg
- Must always be specified the same depth than the leg on which it is mounted

  Example: 18" deep cabinet on a 18" single-sided leg or 24" deep cabinets on each side of a 48" double-sided leg
- Storage divider comes with factory-made Cable Pass-Through cut-out for power access. A Cable Pass-Through Ring is also included

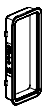

planning with storage cabinet for height-adjustable run-off

The following should be considered when planning grommets and cut-outs on Expansion Cityline Height-Adjustable workstations.

- A Power Module – Storage Cabinet for Height-Adjustability must be specified into cabinet to provide power for the Height-Adjustable Mechanism and for an additional power source for the user's equipment
- **Cannot** be used to hide a CPU tower
- Edge-clamped accessories **cannot** be positioned above the Storage Cabinets for Height-Adjustable Run-Off

clearances

Position and dimensions of Height-Adjustable Run-Off – Bevel Base (JNHB) allow enough clearance for the security of the user

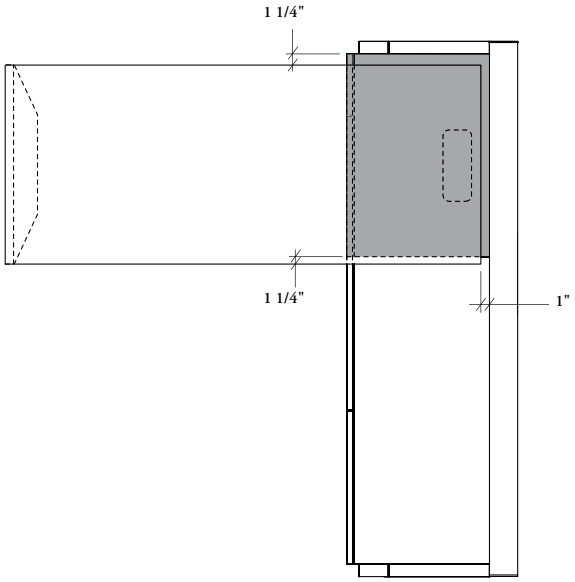

- Can be used alone. When installed on a Single-Sided Structure, make sure all supports are stabilized. Refer to Desk Structure or EZ Fence Structure section for more solutions to stabilize single-sided leg
- Can also be used in combination with a Suspended Credenza (JNBSF, JNBSO, JNBSOO or JNBSC) to fill the workstation. Suspended Credenza must be specified accordingly with the frame configuration and dimensions. For more details, refer to Beam-Mounted Storage section

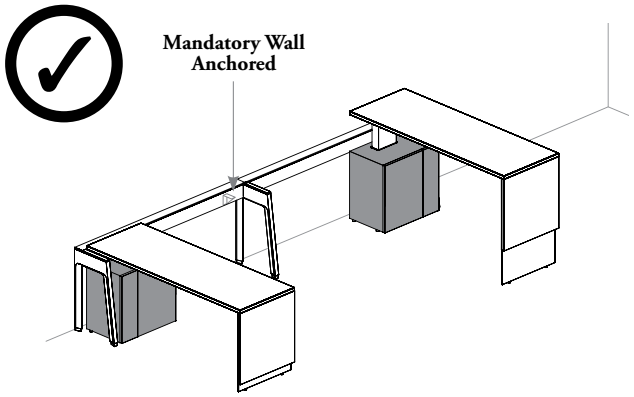

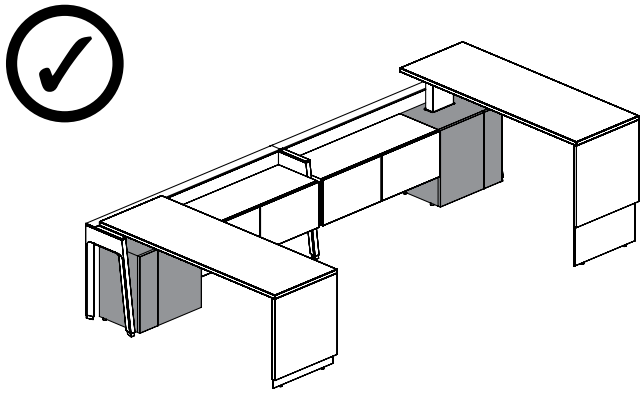

storage cabinet capacities

Storage Cabinet for Height-Adjustable Run-Off capacities are shown below.

The dimensions listed below are internal

storage cabinet depths

Single-Sided Beam Configuration

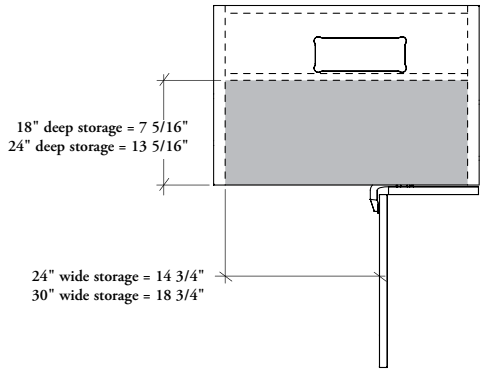

Double-Sided Beam Configuration

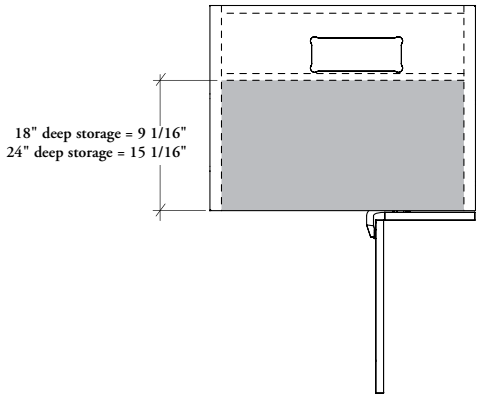

storage cabinet heights

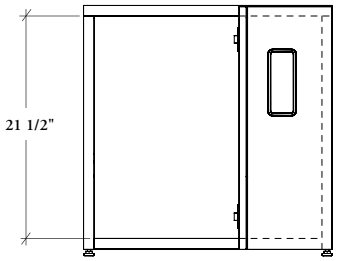

Total Utility Space (without Adjustable Shelf)

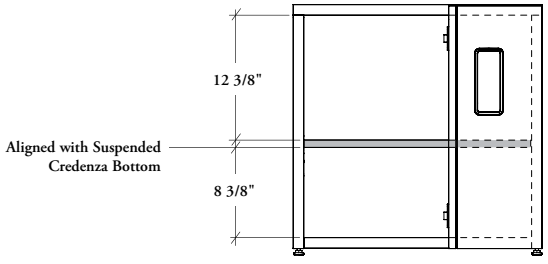

Adjustable Shelf – Lower Position

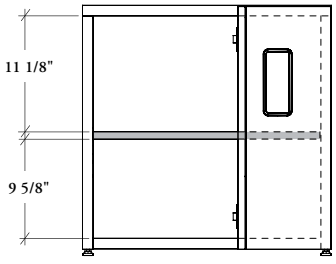

Adjustable Shelf – Middle Position

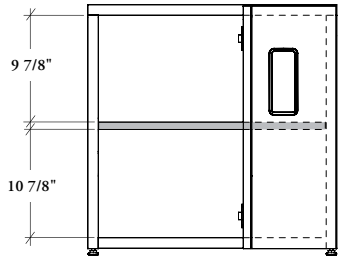

Adjustable Shelf – Upper Position

grain/pattern directions – storage cabinet

Storage Cabinet for Height-Adjustable Run-Off fronts and case grain/pattern directions will match with combined Suspended Credenzas (JNBSF, JNBSO, JNBSOO, JNBSC)

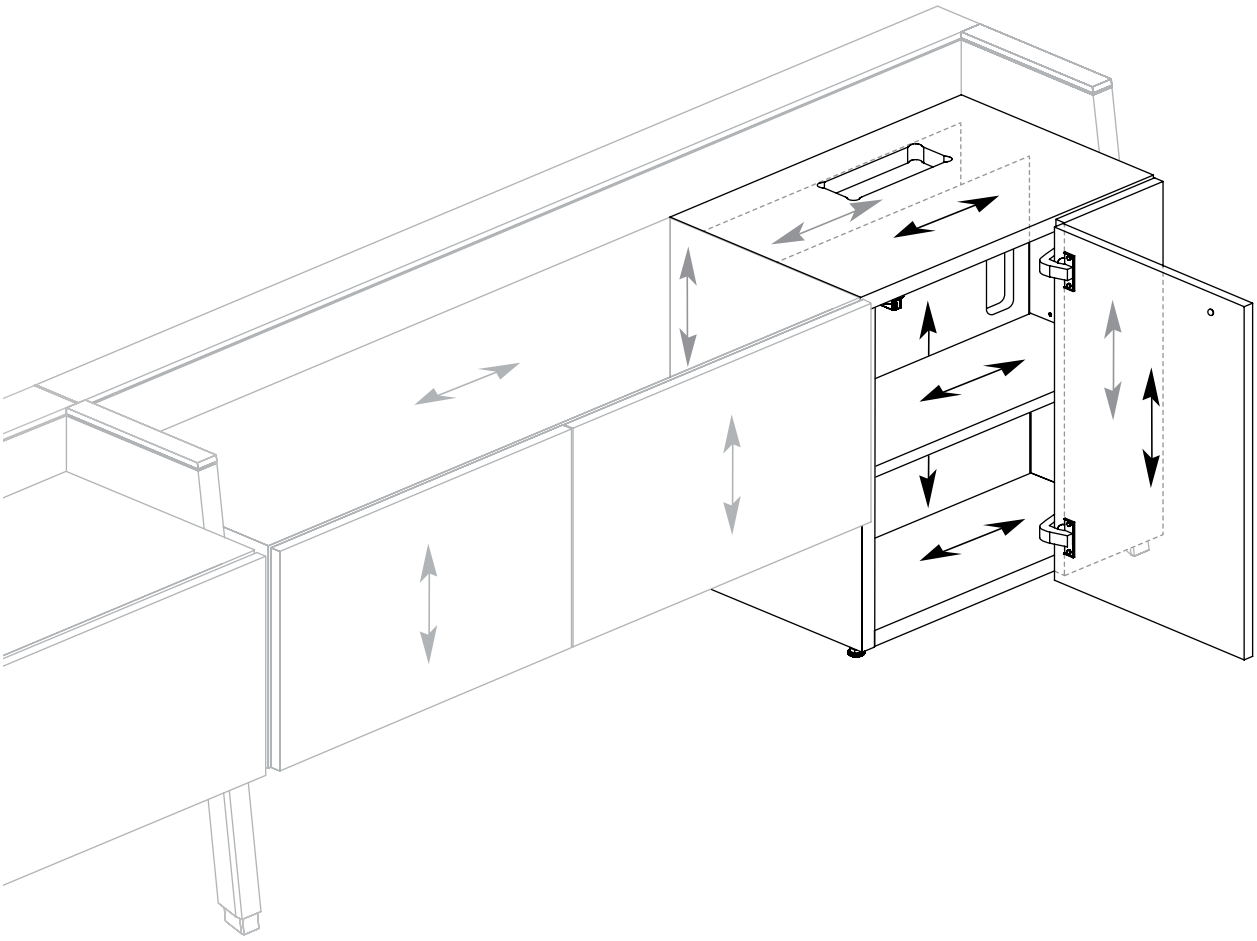

tables

tables

UNDERSTANDING MEETING TABLES 412

LAMINATE MEETING TABLE BASICS 413

WRITABLE GLASS MEETING TABLE BASICS 414

GRAIN/PATTERN DIRECTION – MEETING TABLES 416

MEETING TABLE POWER & DATA BASICS. 417

understanding meeting tables

Meeting Tables outfit in between workstation spaces and are ideal for collaboration.

- Provide a meeting area in a variety of shapes and power modules cut-outs
- Expansion Cityline offers two worksurface finishes of the Meeting Tables: Laminate or Writable Glass

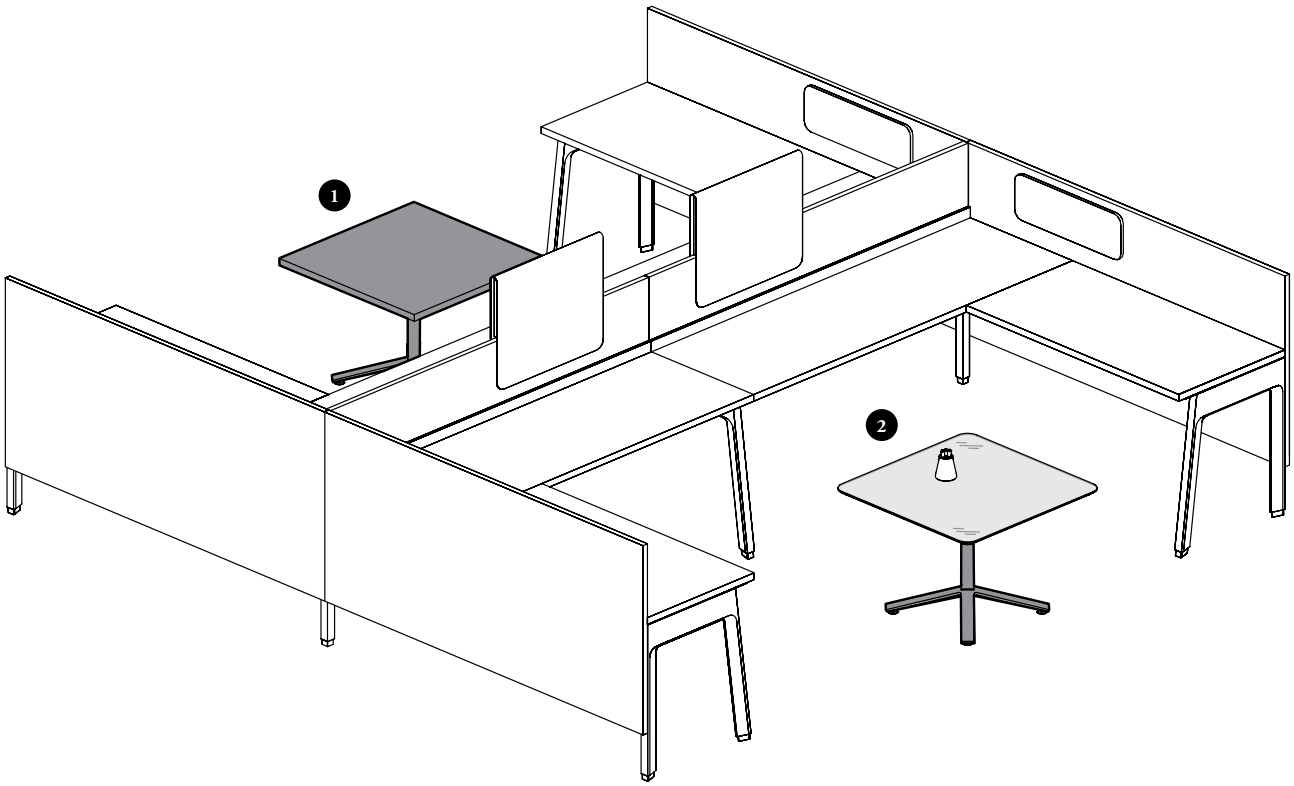

1 laminate meeting tables

- Laminate Meeting Tables offer a freestanding collaborative worksurface between workstations
- Blade Star Base is included
- Available in two shapes: round or square

2 writable glass meeting tables

- Writable Glass Meeting Tables offer a freestanding writable worksurface ideal for collaboration between workstations
- Blade Star Base is included
- Only available in square glass surface with Metal Tapered Edge

laminate meeting table basics

Laminate Meeting Tables offer a freestanding collaborative worksurface between workstations.

- Power Modules are **not included** and must be specified separately
- All dimension are nominal, widths are reduced by a 0.5 % factor

Laminate Meeting Tables
- Total surface thickness of 1 3/16"
- Two shapes are available:

Round Worksurface

Square Worksurface

- Two Corner Details can be specified with square laminate worksurfaces:
  - Curved (C)
  - Standard (S)

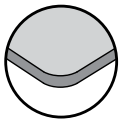

Curved (C)

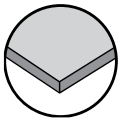

Standard (S)

Finishes:
Worksurface: Foundation Laminate
Edge Trim Styles: Straight Trim (3 mm)
Edge Trim: Edge Trim colors
Support Finish: Foundation, Accent and Mica

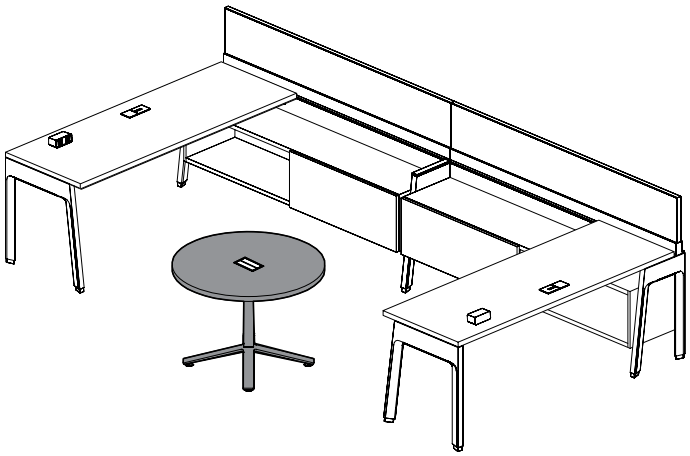

No Wire Management (N)

With Wire Management (P)

Dual (PD)

Quad (PQ)

Power Pill (BLEPP)

Compact 8" (LC)

Linear Power Module (BLELP)

Power Modules Cut-Outs
Worksurfaces are available with or without cut outs for Power Modules illustred above:

Blade Star Base
- Two base styles are available:
  - With Wire Management (P)
  - No Wire Management (N)
- 29 "from floor to top of finished worksurface
- Include levelers with a 1" adjustment range
- When a Power Module Cut-Out (PD, PQ or LC) is specified, the Blade Star Base comes With Wire Management (P). When No Power Module Cut-Out (NN), the base comes with No Wire Mangement (N)

tables & configuration supports

		Blade Star Base	Cut-out for Power Pill OR	OR	Cut-Out for Linear Power Module
		One size only	2 Outlets	4 Outlets	3 Outlets (Compact 8")
Round Meeting Worksurface (JNTOSB					
	36" W	1	1	1	1
	42" W	1	1	1	1
	48" W	1	1	1	1
Square Meeting Worksurface (JNTSSB)					
	36" W	1	1	1	1
	42" W	1	1	1	1
	48" W	1	1	1	1

*** The Power Pill or Linear Power Module position is the same that the grain direction.

writable glass meeting table basics

Writable Glass Meeting Tables outfit in between workstation spaces and are ideal for collaboration.

- Power Modules are **not included** and must be specified separately. Writable Glass Worksurface cut-out must be specified and **cannot** be drilled on-site
- Writable Glass Worksurface **do not** accept product with clamp-on fixation
- All dimension are nominal, widths are reduced by a 0.5 % factor

Writable Glass Meeting Tables

- Consist a of back-painted writable glass mounted on a 1" thick low pressure laminate (LPL) and finished with Metal Tapered Edge shape, for a total thickness of 1 3/16"
- Available with a 5/32" (4 mm) thick tempered glass
- The Metal Tapered Edge shape give a unic look to the writable glass worksurface and invite to the collaboration
- Only one shape is available:

Square Worksurface

Curved

- Only available with Curved Corner Details
- A Table Companion Marker Kit is included with writable glass worksurface
- **Not** all optical computer mouse are compatible on glass worksurface, Desk Pad (YPDP) is recommended (see Complements products)

Finishes:
Glass Worksurface: Back-Painted
Metal Tapered Edge and Support: Foundation, Accent and Mica

No Wire Management (N)

With Wire Management (P)

Blade Star Base

- Two base styles are available:
  - With Wire Management (P)
  - No Wire Management (N)
- 29 3/32" from floor to top of finished worksurface
- Include levelers with a 1" adjustment range
- When a Power Module Cut-Out (PD, PQ or LC) is specified, the Blade Star Base comes With Wire Management (P). When No Power Module Cut-Out (NN), the base comes with No Wire Mangement (N)

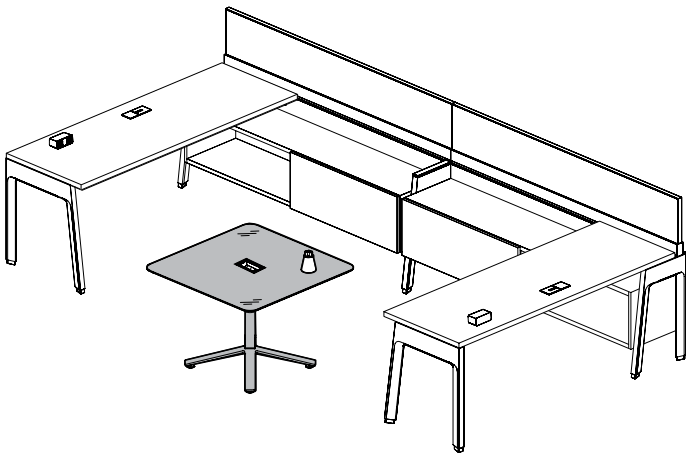

Dual (PD)

Quad (PQ)

Power Pill (BLEPP)

Compact 8" (LC)

Linear Power Module (BLELP)

Power Modules Cut-Outs
Worksurfaces are available with or without cut outs for Power Modules illustred above:

tables & configuration supports

	Blade Star Base	Cut-out for Power Pill OR OR		Cut-Out for Linear Power Module
	One size only	2 Outlets	4 Outlets	3 Outlets (Compact 8")

Square Meeting Worksurface (JNGSSB

		Number of Cut-Out		
36" W	1	1	1	1
42" W	1	1	1	1
48" W	1	1	1	1

writable glass meeting table basics (continued)

writable glass worksurface profile

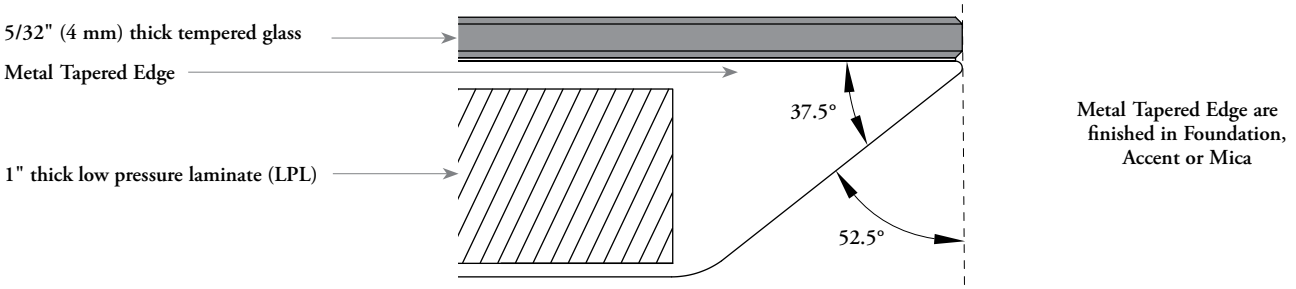

Only available with Curved Corner Detail on Square Writable Glass Meeting Table (JNGSSB)

table companion marker kit

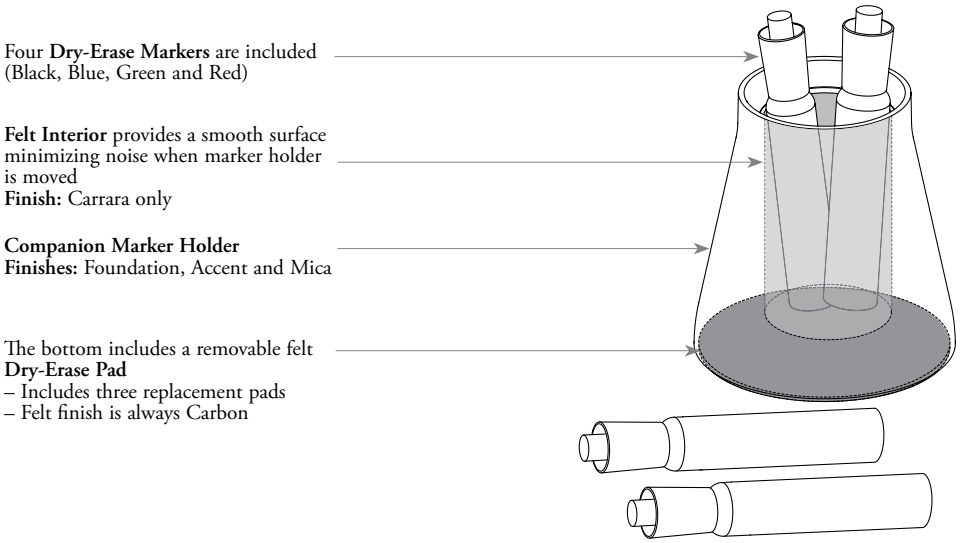

grain/pattern direction – meeting tables

Attention to grain/pattern direction is important when planning worksurface.

- The pattern direction is **not** centered and grain direction can appear in different orientation from side-to-side worksurface
- Shading indicate user edge

worksurface grain/pattern direction and user edges

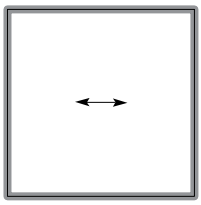

JNTSSB

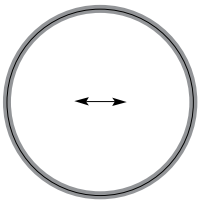

JNTOSB

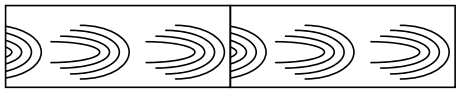

Laminate = ⟷ = Grain Direction =

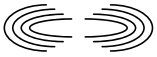

user edges for writable glass worksurfaces

JNGSSB

edges

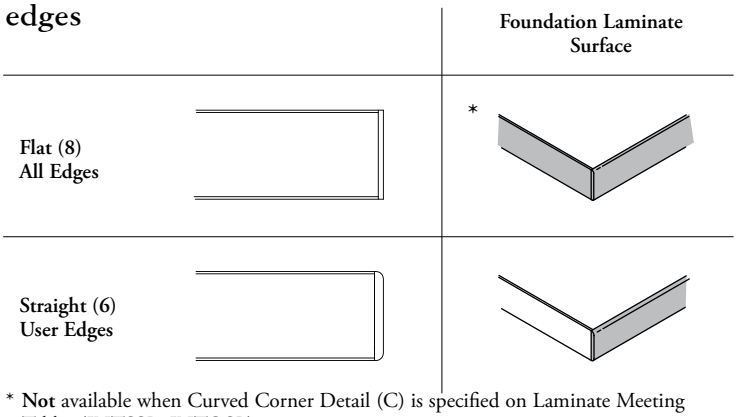

* **Not** available when Curved Corner Detail (C) is specified on Laminate Meeting Tables (JNTSSB, JNTOSB)

meeting tables power & data basics

The illustration below shows how Power/Data is incorporated into Expansion Cityline Meeting Tables.

blade star base

Blade Star Base with Wire Management (P) option only

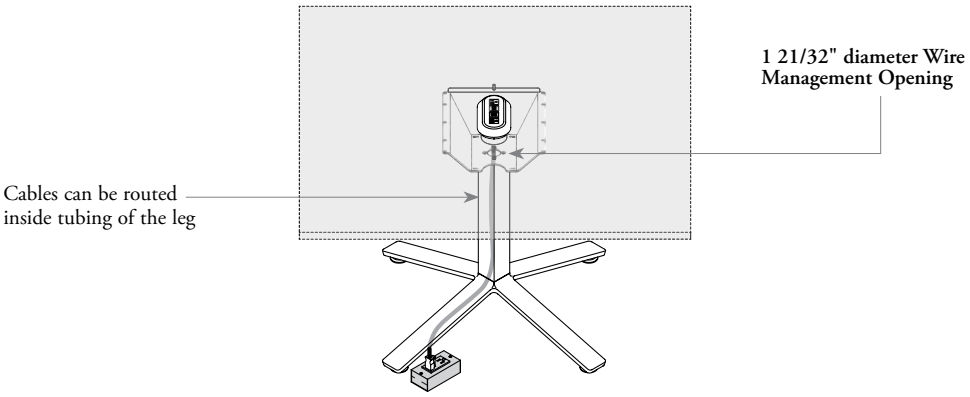

Wire opening details on foot

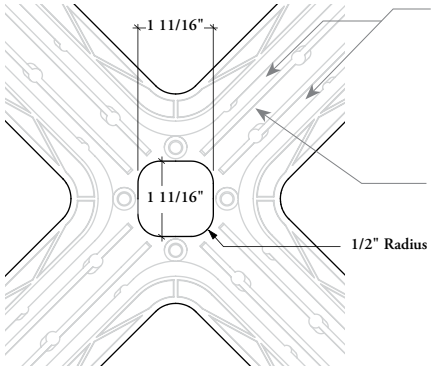

Data Cable can be routed at the bottom of the foot

Up to one power cable and two data cables Cat6 or one data cable Cat6a can be inserted by blade

Dia. 3/8" Power Cable

Bottom View

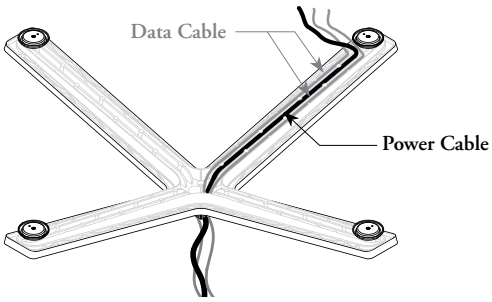

desk accessories

desk accessories

UNDERSTANDING FREESTANDING SUPPORTS 420

FREESTANDING SUPPORT BASICS 425

PLANNING WITH FREESTANDING LEGS 427

PLANNING WITH FREESTANDING LEG – LATERAL CABINET . . . 428

PLANNING WITH FREESTANDING LEG – PENINSULA 429

PLANNING WITH PENINSULA MONOPOD BASE 431

UNDERSTANDING MODESTY PANELS 432

MODESTY PANEL BASICS 434

PLANNING WITH SUSPENDED MODESTY PANELS 435

PLANNING BEAM-MOUNTED MODESTY PANEL 437

understanding freestanding supports

Freestanding supports are required to support one end of worksurfaces or cabinets in unstructured return configurations.

EZ compatible

Only Modesty Panels (JNASMG, JNASML and JNABMS) are compatible with EZ Fence Structure, refer to EZ Fence Structure section for more details. All other Desk Accessories products **cannot** be used with EZ Fence Structure products.

freestanding legs

The information listed below is only applicable to Freestanding Legs (JNALS, JNALD)

Are available in Single- (Shown) and Double-Sided styles

Can be specified: Left or Right (single-sided) or End (double-sided)

Installed flush at the end of a return worksurface

1 Come with connection plate to attach the worksurface

Come with levelers for a leveling range of 3" (-3/16", +2 13/16")

Single-Sided leg comes with two vertical leg profiles: one angled 2 and one straight 3 (Shown) Double-Sided leg comes with an angled profile 2 on both sides

Come with a Leveler Cover 4 to hide the black leveler for aesthetic look. The Leveler Cover will match with the leg finish

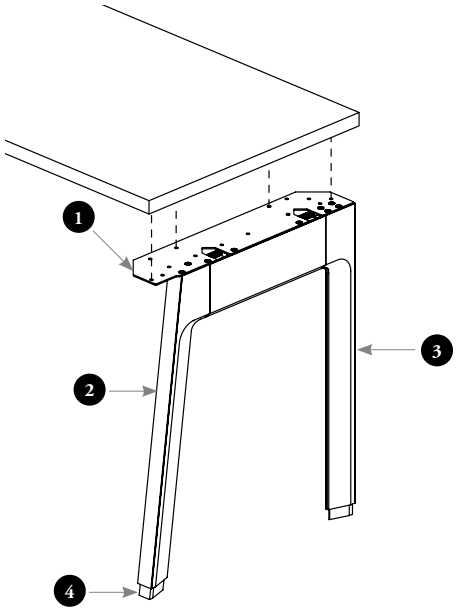

understanding freestanding supports (continued)

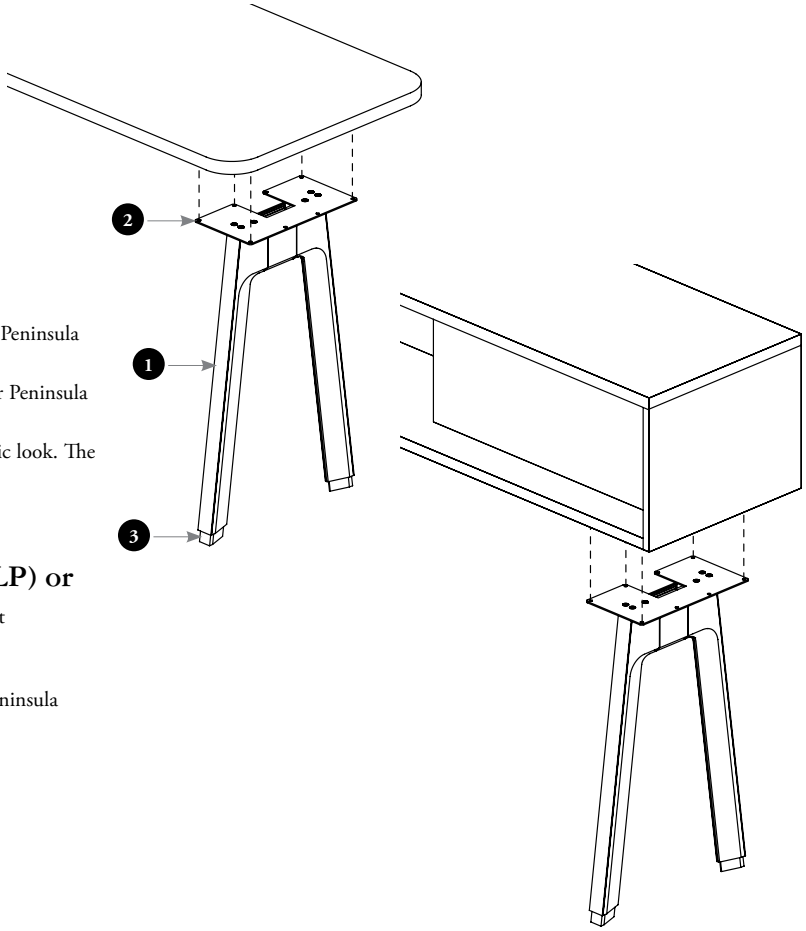

1. Always come with two angled vertical leg profiles on both sides
2. Universal connection can be mounted under lateral cabinets or Peninsula Worksurface

   Always positioned recessed from the end of a Lateral Cabinet or Peninsula Worksurface
3. Come with a Leveler Cover to hide the black leveler for aesthetic look. The Leveler Cover will match with the leg finish

   Levelers provide a leveling range of 3" (-3/16", +2 13/16")

freestanding leg – lateral cabinet (JNALP) or

Always positioned 6" recessed from the end of a Lateral Cabinet

freestanding leg – peninsula (JNAPP)

Can be positioned 6", 12" or 18" recessed from the end of a Peninsula Worksurface

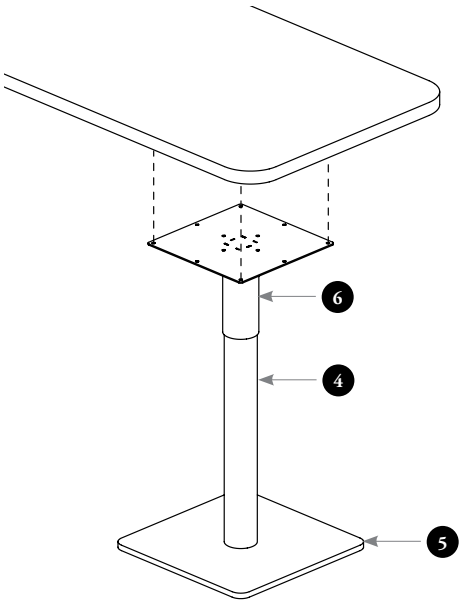

peninsula monopod base – round

Designed with cylindrical post 4 and square base 5

6. Provide a leveling range of 3 1/2" (-1/4", +3 1/4")

   36" and 42" high monopod bases can be used with High Peninsula Worksurface only, 29" high can be used on all other Peninsula Worksurfaces (Laminate and Writable Glass)

understanding freestanding supports (continued)

freestanding legs

Two styles are available and can be specified separetely:

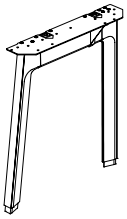

Freestanding Leg – Single-Sided (JNALS)
Left (Shown) or Right Configuration

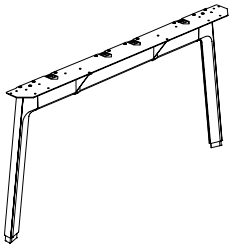

Freestanding Leg – Double-Sided (JNALD)
End Configuration

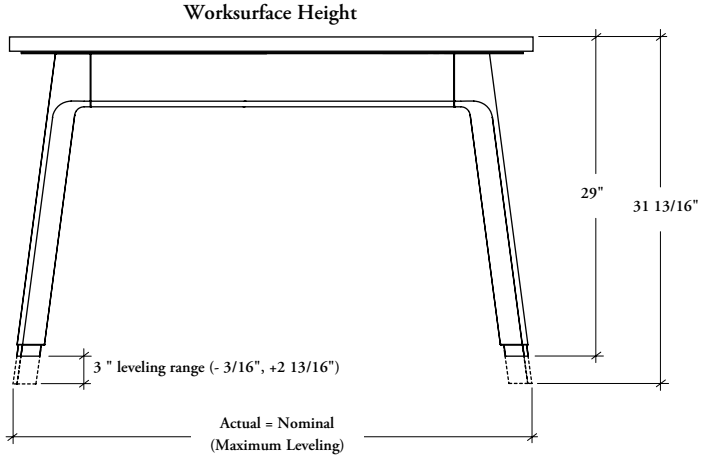

Groove on horizontal part

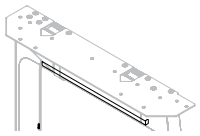

Slots on vertical parts

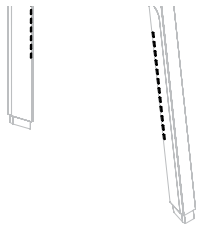

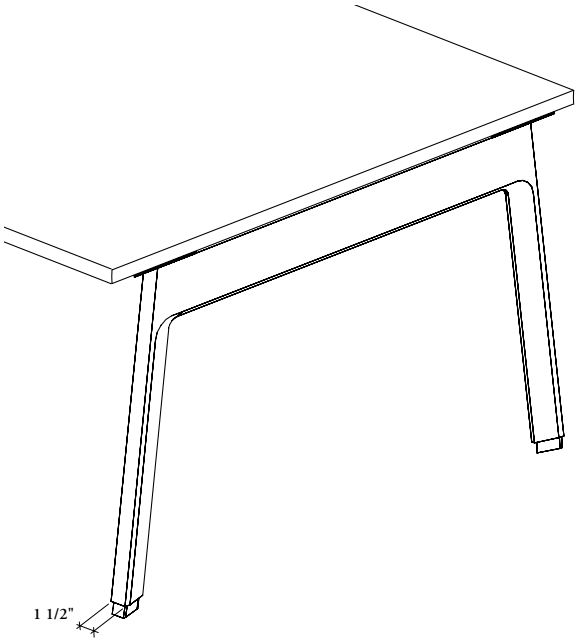

- Support rectangular worksurface styles, suspended pedestal/cubby and leg-mounted screens
- Two attachment features are available:

  The upper horizontal part comes with a bottom groove which contributes to support the following products:

  – Suspended Pedestal/Cubby (JNBP, JNBC)
  – Leg-Mounted Elevated Screens (JNSESL, JNSEGL, JNSEFL, JNSEEL)

  The vertical parts come with integrated slots which contribute to support the following products:

  – Suspended Pedestal/Cubby (JNBP, JNBC)
  – Leg-Mounted Floor Screens (JNSFSL, JNSFST, JNSFGO, JNSFGT)
  – Leg-Mounted Floor Screens with Metal Towers (JNSFOL, JNSFOT, JNSFDL, JNSFDT, JNSFTL, JNSFTT)

  The slots can be hidden with a groove trim (included) when they are not used. The trims come in the best match possible for the Foundation and Mica finishes, and they come in a Soft Gris coordinate for Accent colors

understanding freestanding supports (continued)

freestanding leg – lateral cabinet

Only one style available and can be specified separetely

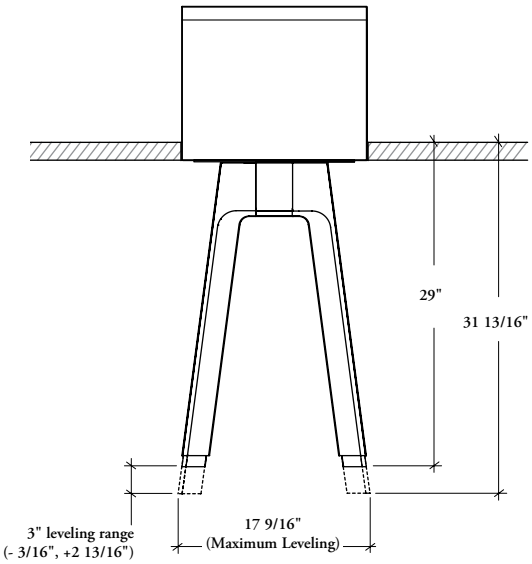

Freestanding Leg – Lateral Cabinet (JNALL)

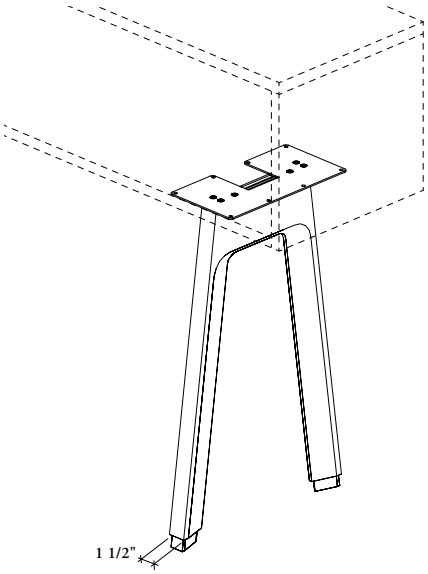

- Support Lateral Hang-On Cabinets perpendicularly in casual applications only
- Single-Sided and Shared Hang-On Cabinets are both centered on the Freestanding Leg – Lateral Cabinet
- Cabinets **cannot** support worksurfaces and need a Structural Leg – Fence and a Beam at the other end
- In-line fence leg can be centered or justified under cabinet, end fence leg can only be justified

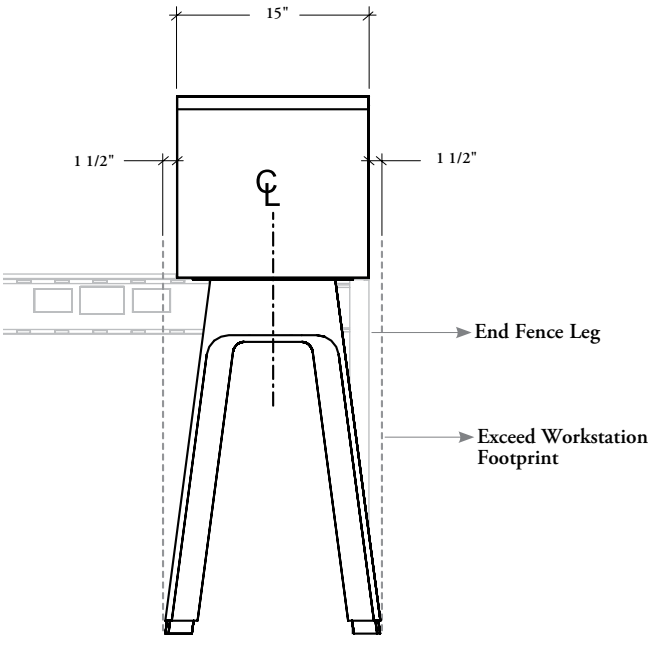

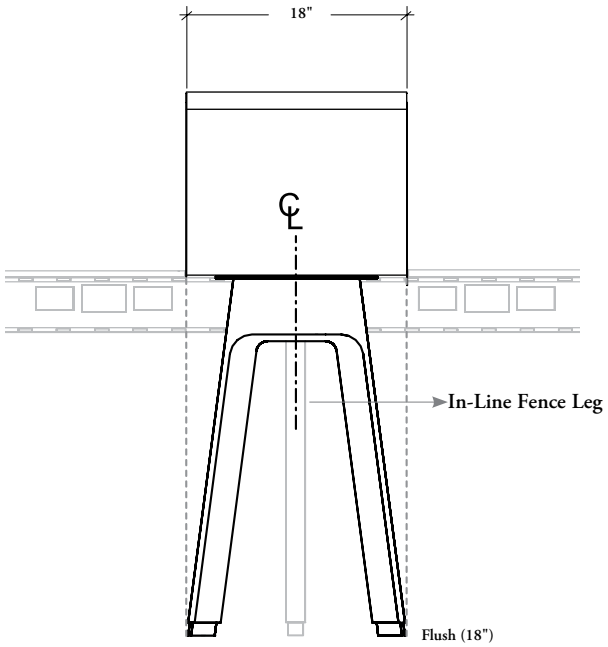

single-sided application

- Used in end or middle of casual stations only
- The 15" deep single-sided Lateral Hang-On Cabinet (JNBDLO) must be mounted perpendicularly to a beam and over a fence leg. For details, refer to the Beam-Mounted Storage section

double-sided application

- Used in end or middle of casual stations only
- The 18" deep shared Lateral Hang-On Cabinet (JNBDLO) must be mounted perpendicularly to a beam and over a fence leg. For details, refer to the Beam-Mounted Storage section

understanding freestanding supports (continued)

freestanding leg – peninsula

Only one style available and can be specified separetely

Freestanding Leg – Peninsula (JNALP)

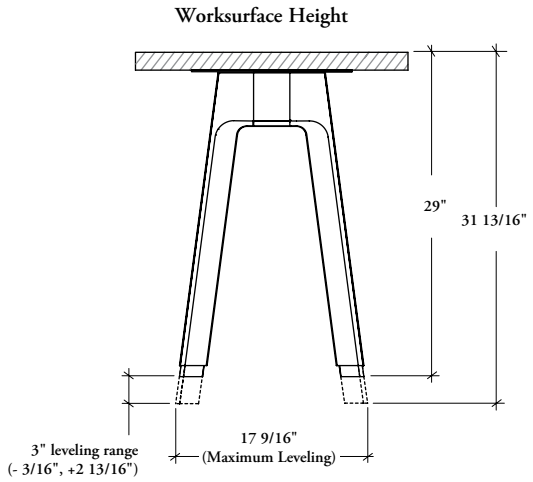

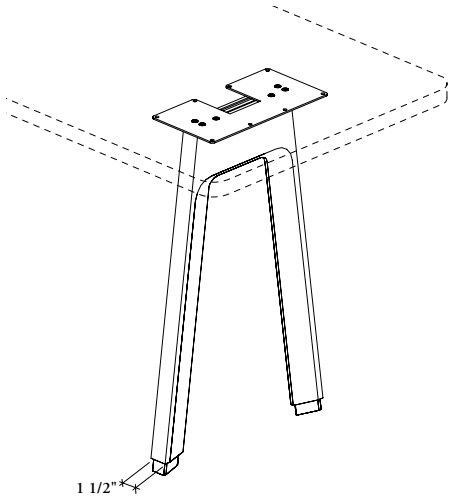

peninsula monopod base – round

- Only one style available and can be specified separetely
- Each height provides a leveling range of 3 1/2" (-1/4", +3 1/4")

Peninsula Monopod Base – Round (JNAPP)

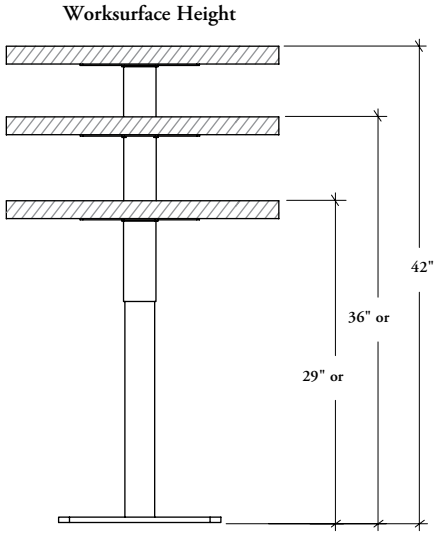

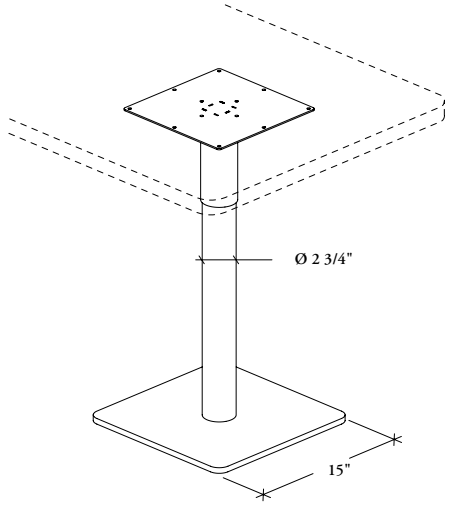

freestanding support basics

The following outlines the features of each of the freestanding supports available in Expansion Cityline.

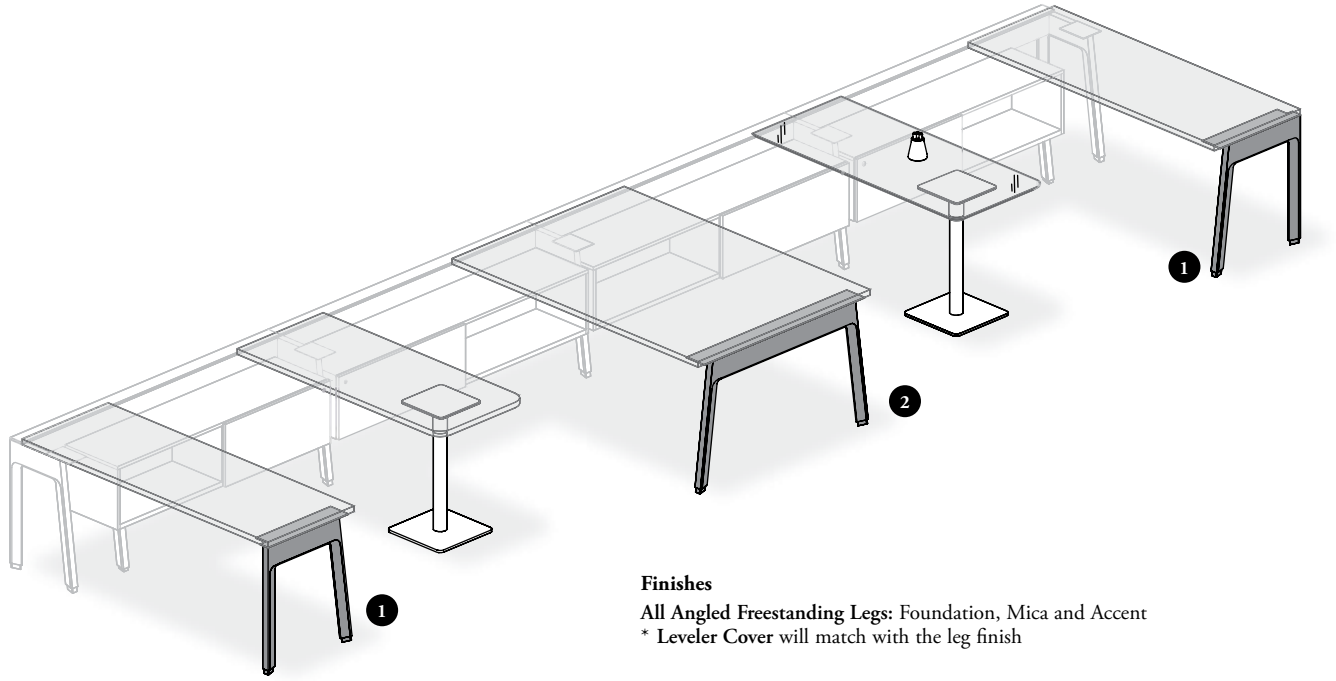

Finishes

All Angled Freestanding Legs: Foundation, Mica and Accent
* **Leveler Cover** will match with the leg finish

- Can be used in return applications only
- Only available with Angled (A) profile
- Height is 29" from the finished floor to the top of the finished worksurface with a leveling range of 3"
- Come with Leveler Cover to hide the black leveler for aesthetic look

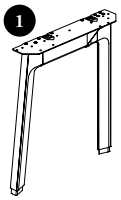

Left (L) (Shown) or Right (R)

Freestanding Leg – Single-Sided (JNALS) or Freestanding Leg – Double-Sided (JNALD)

- Provides support for one end of Single- or Double-Sided Rectangular Worksurfaces
- Available in depths 24" or 30" (single-sided) or 48" or 60" (double-sided)
- Can be specified Left (L) or Right (R) for single-sided configuration or End (E) for double-sided configuration

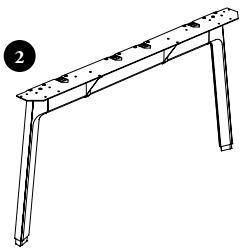

End (E)

freestanding support basics (continued)

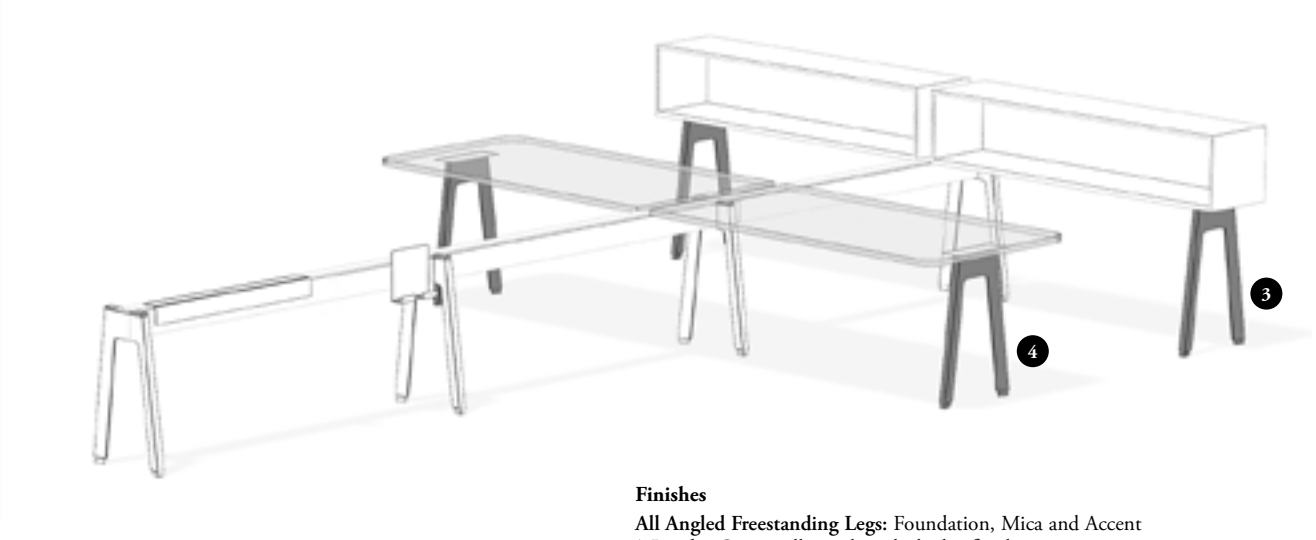

Finishes

All Angled Freestanding Legs: Foundation, Mica and Accent
* **Leveler Cover** will match with the leg finish

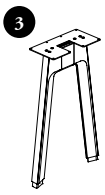

For Lateral Cabinet

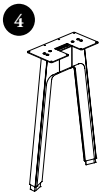

For Peninsula

Freestanding Leg – Lateral Cabinet (JNALL) or Freestanding Leg – Peninsula (JNALP)

- Provides support for Lateral Hang-On Cabinet or for Peninsula Worksurfaces
- Only available in 18" depth

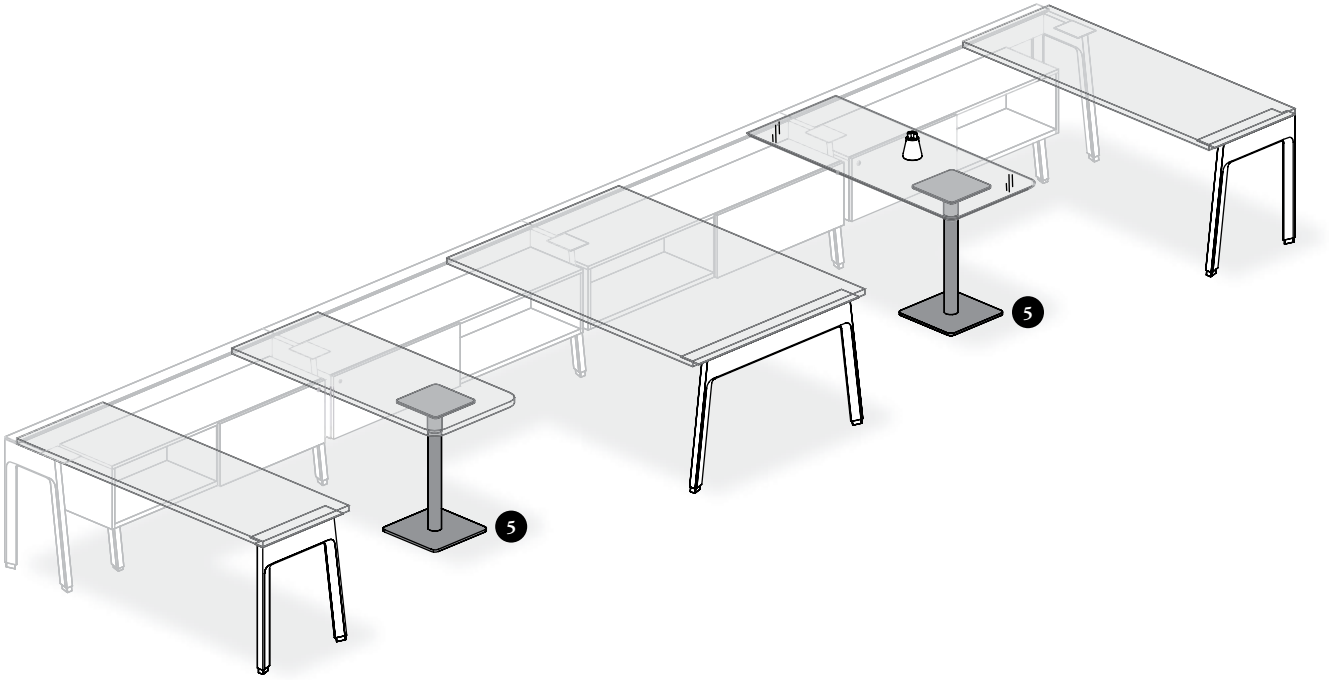

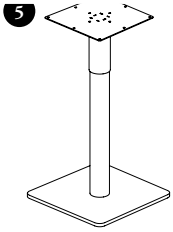

Peninsula Monopod Base – Round (JNAPP)

- Provides support for one end of Peninsula Worksurfaces (29") or High Peninsula Worksurfaces (36" and 42")
- Only available in heights 29", 36" or 42" with adjustable range of 3 1/2"

Base Finish: Foundation, Mica or Accent

planning with freestanding legs

The following should be considered when planning with Freestanding Legs Single- or Double-Sided.

- Must be specified full worksurface depth
- Can be specified on unstructured returns or run-offs only

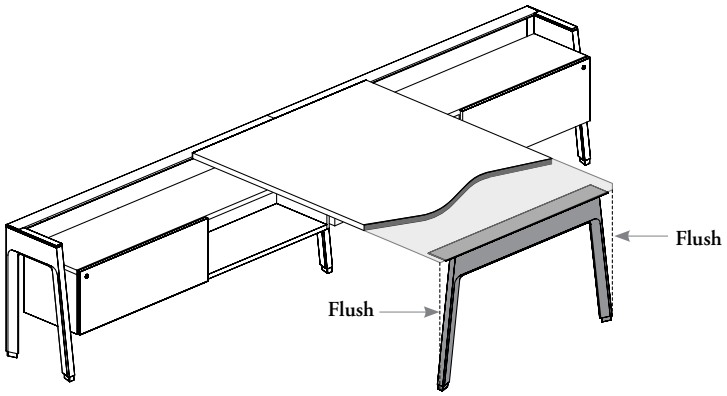

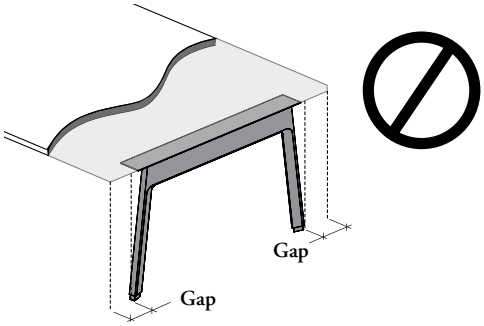

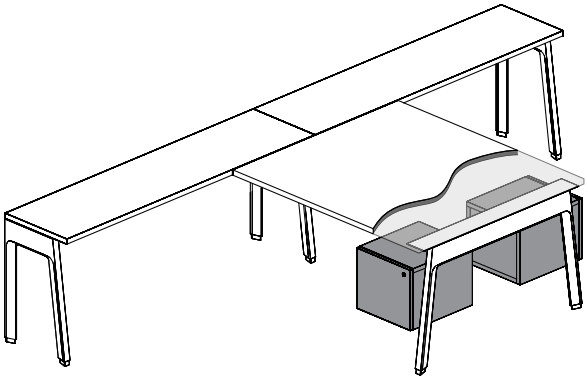

Suspended Storage
Only the Suspended Pedestal/Cubby can be supported by a Freestanding Leg

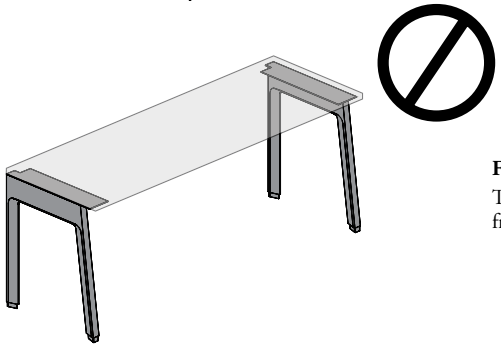

Freestanding Application
Two Freestanding Legs **cannot** be specified to create a freestanding table

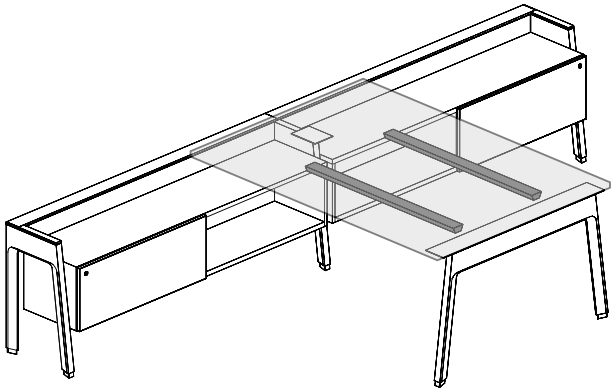

Worksurface Reinforcement Channel (JNWRC)
ATTENTION must be given to channel location when they are used in conjunction with Freestanding Legs. Refer to the Worksurfaces section for more details

planning with freestanding leg – lateral cabinet

The following should be considered when planning with Freestanding Leg – Lateral Cabinet.

- Can be used in perpendicular planning only
- Only the Lateral Hang-On Cabinet – Open (JNBDLO) can be used with this leg

restrictions

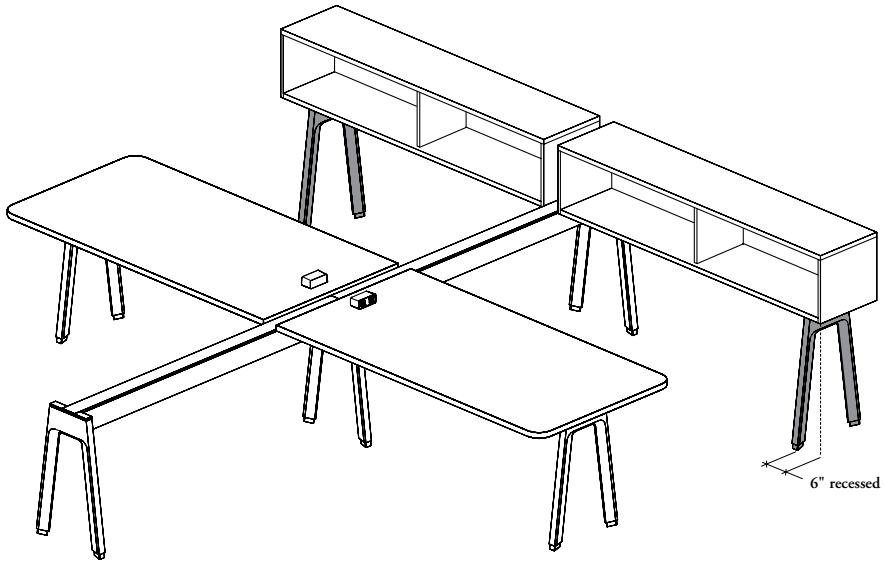

Must be positioned recessed 6" from end of lateral cabinet

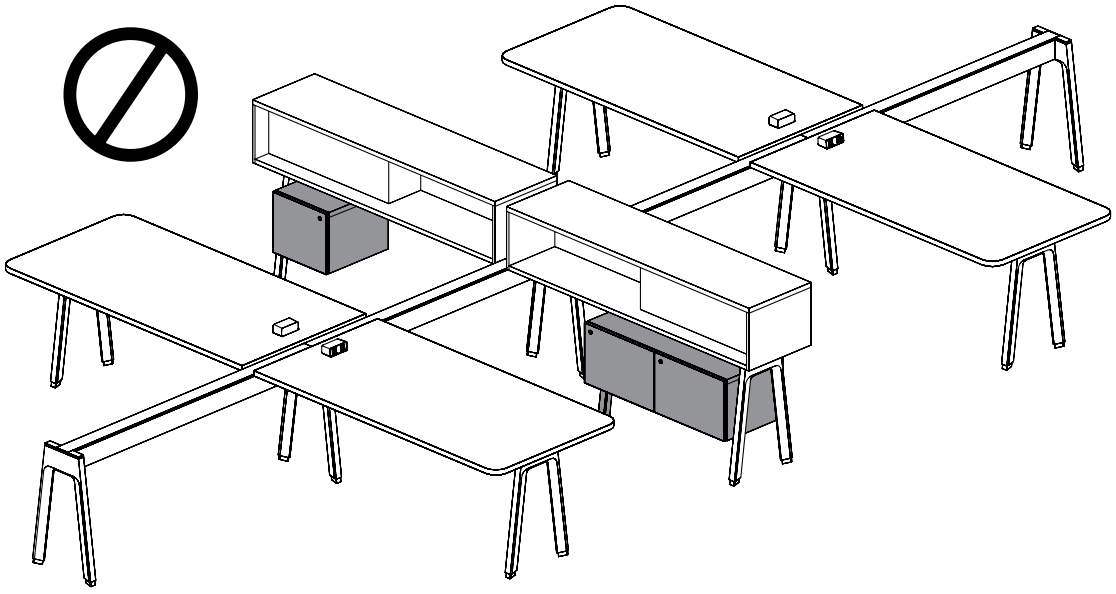

The suspended or semi-suspended storage **cannot** be used with this leg

planning with freestanding leg – peninsula

The following should be considered when planning with Freestanding Leg – Peninsula.

Three recess applications are allowed:

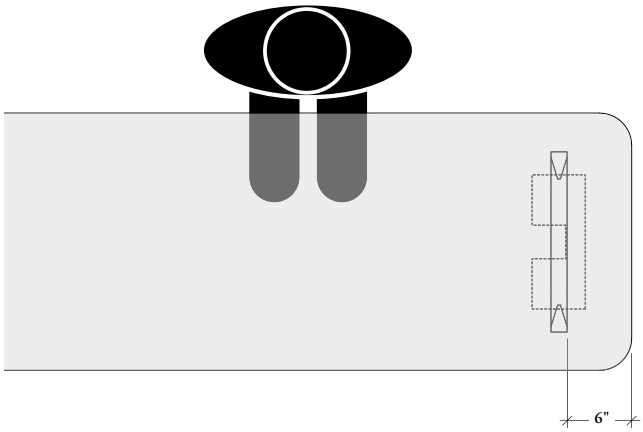

6" recessed

- Optimizes user space
- Aligns with Lateral Hang-On Cabinet

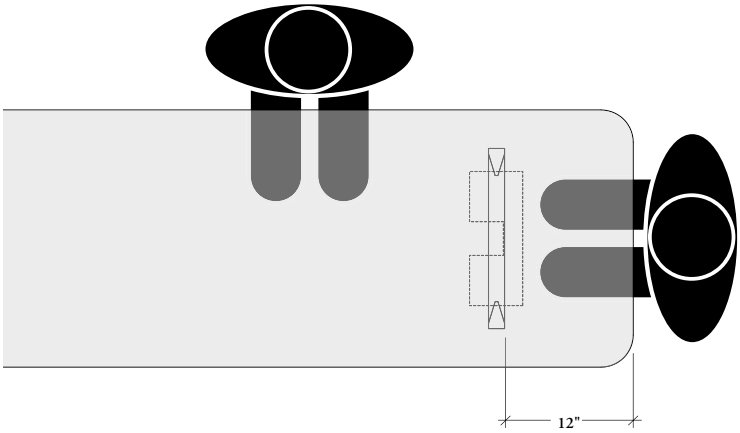

12" recessed

- Optimizes both user and visitor spaces
- Virtually centers the leg on 24" deep Peninsula Worksurface

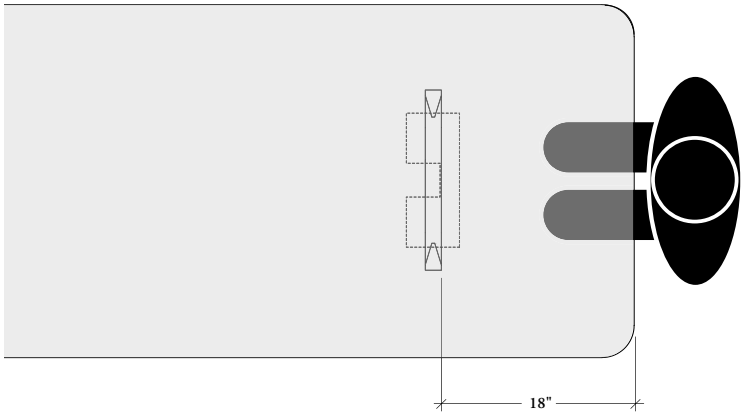

18" recessed

- Optimizes visitor space
- Virtually centers the leg on 36" deep Peninsula Worksurface

planning with freestanding leg – peninsula (continued)

- Can be used in perpendicular planning only
- Only the Peninsula Worksurfaces (JNWPSN, JNWPSE, JNWPCN, JNWPCE, JNWPGN, JNWPGE) can be used with this leg
- Peninsula Worksurface can be supported with Freestanding Leg Peninsula. However the leg can be replaced by a Structural Beam (JNDBB or JNDCB) with Structural Leg – Peninsula (JNDLP) or a Peninsula Monopod Base – Round (JNAPP)

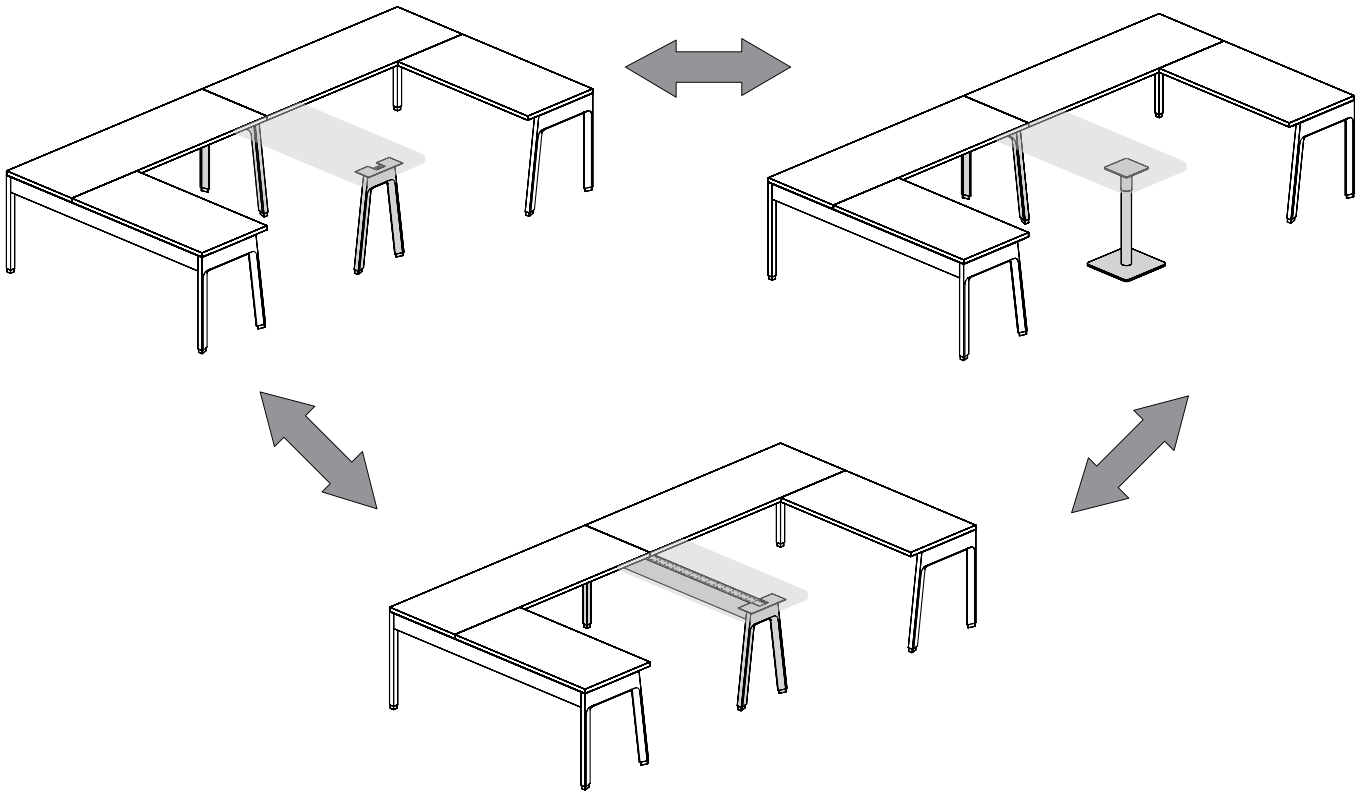

Leg **cannot** support a Suspended Pedestal/Cubby or a Suspended or Semi-Suspended Credenza

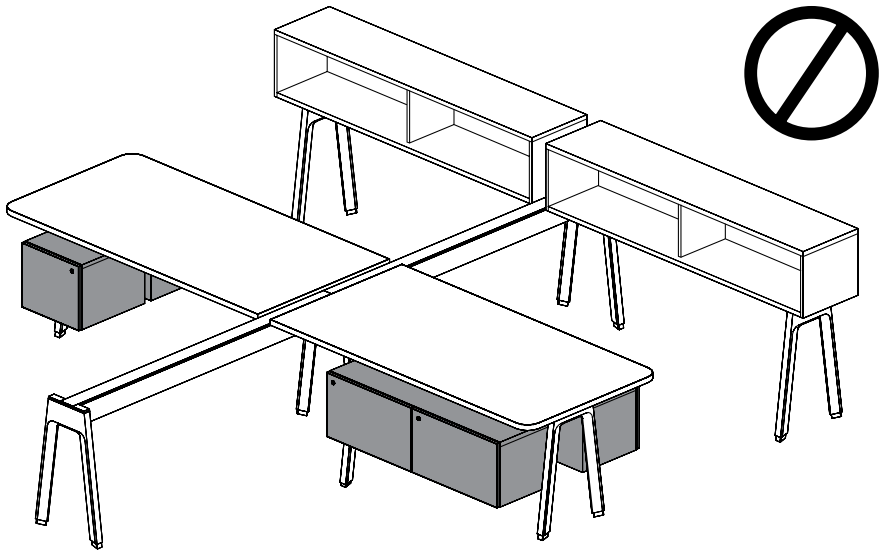

planning with peninsula monopod base

The following should be considered when planning with Peninsula Monopod Base – Round.

- Can be used in perpendicular planning only
- Peninsula Worksurface can be supported by a Peninsula Monopod Base – Round. However the base can be replaced by a Structural Beam (JNDBB or JNDCB) with Structural Leg – Peninsula (JNDLP) or a Freestanding Leg – Peninsula (JNALP). See the illustration on previous page
- 36" and 42" high legs can only be used with High Peninsula Worksurface (JNWPH)
- Optimized for collaboration all around the worksurface
- Three recess applications are allowed and varies with worksurface depth specified

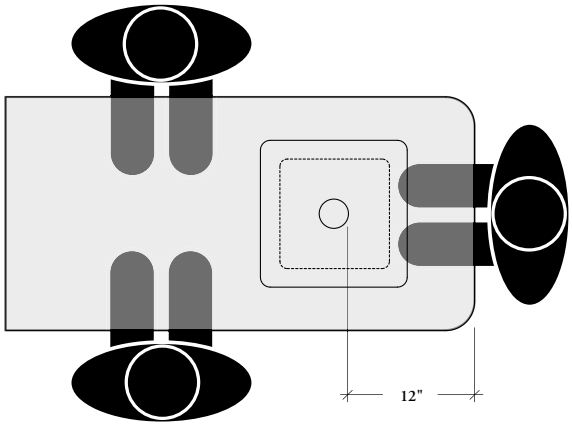

recessed for 24" deep worksurface

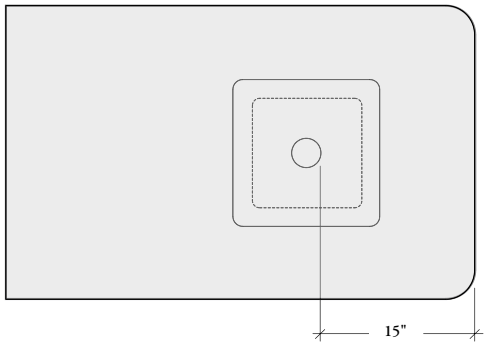

recessed for 30" deep worksurface

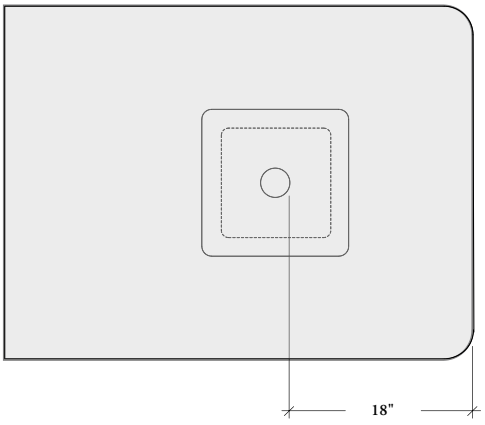

recessed for 36" deep worksurface

understanding modesty panels

Two Modesty Panel types are available:

suspended modesty panel

- Can be specified in Glass or Laminate
- Can be mounted under unstructured returns, run-offs, peninsulas, height-adjustable run-off and run-off for EZ fence

With Returns, Run-Offs, Peninsulas and Height-Adjustable Run-Off Applications

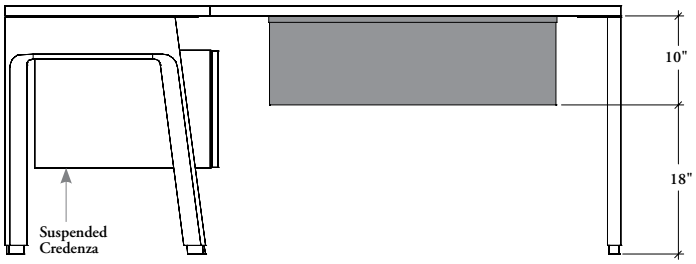

Modesty & Floor Height (Front View)

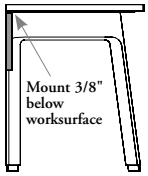

Flush Position with Single-Sided Configuration (Side View)

Positioned flush with the back edge of the worksurface

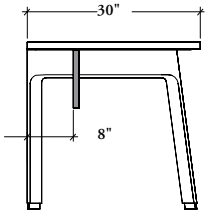

8" recessed with Single-Sided Configuration (Side View)

A 8" recessed from the back edge is allowed with 30" deep worksurfaces only

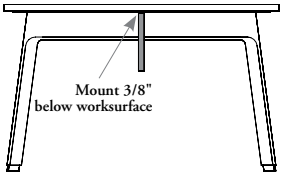

Centered with Double-Sided Configuration (Side View)

Positioned centered on the worksurface

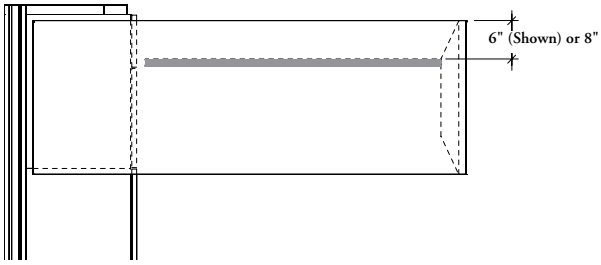

6" or 8" recessed under Height-Adjustable Run-Off with Bevel Base (JNHB) (Bottom View)

A 6" recess from the back edge is allowed on 24" deep worksurfaces or
A 8" recess on 30" deep worksurfaces

With Run-Off EZ Fence Applications

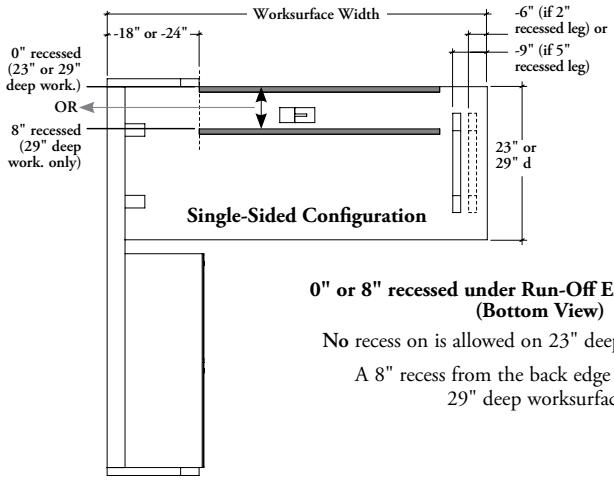

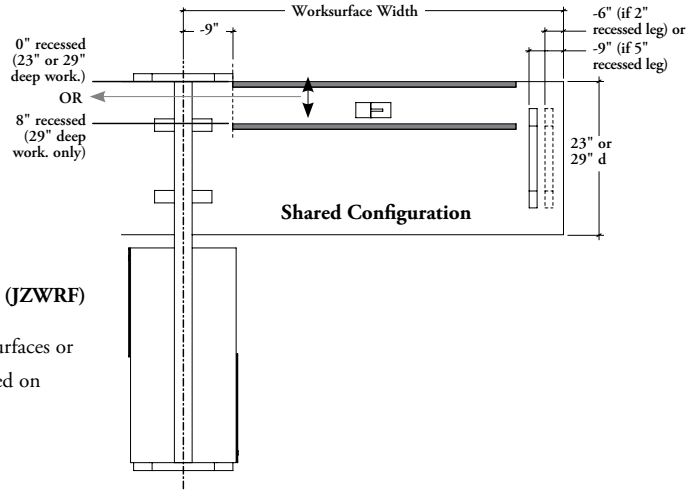

0" or 8" recessed under Run-Off EZ Fence (JZWRF) (Bottom View)

No recess on is allowed on 23" deep worksurfaces or

A 8" recess from the back edge is allowed on 29" deep worksurfaces

understanding modesty panels (continued)

beam-mounted modesty panel

- Can be specified Laminate only
- Can be used under Single- or Double-Sided Structural Beam (JNDBB or JNDCB), EZ Fence Beam (JZSBB or JZSCB) or EZ Fence Beam for Corridor (JZSBS or JZSCS)

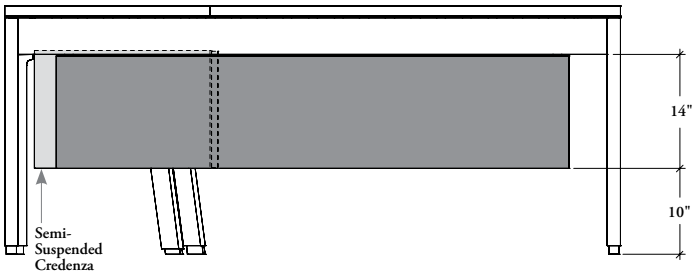

Modesty & Floor Height (Front View)
Align with a Suspended or Semi-Suspended Credenza

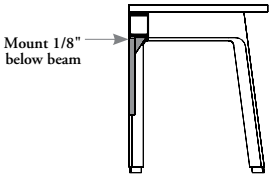

Flush Position with Single-Sided Configuration (Side View)
Positioned flush with the back side of the beam

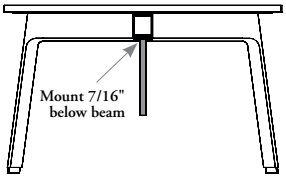

Centered with Double-Sided Configuration (Side View)
Positioned centered on the beam

modesty panel basics

The following outlines the features of the Modesty Panels.

No Grommet on modesty panels

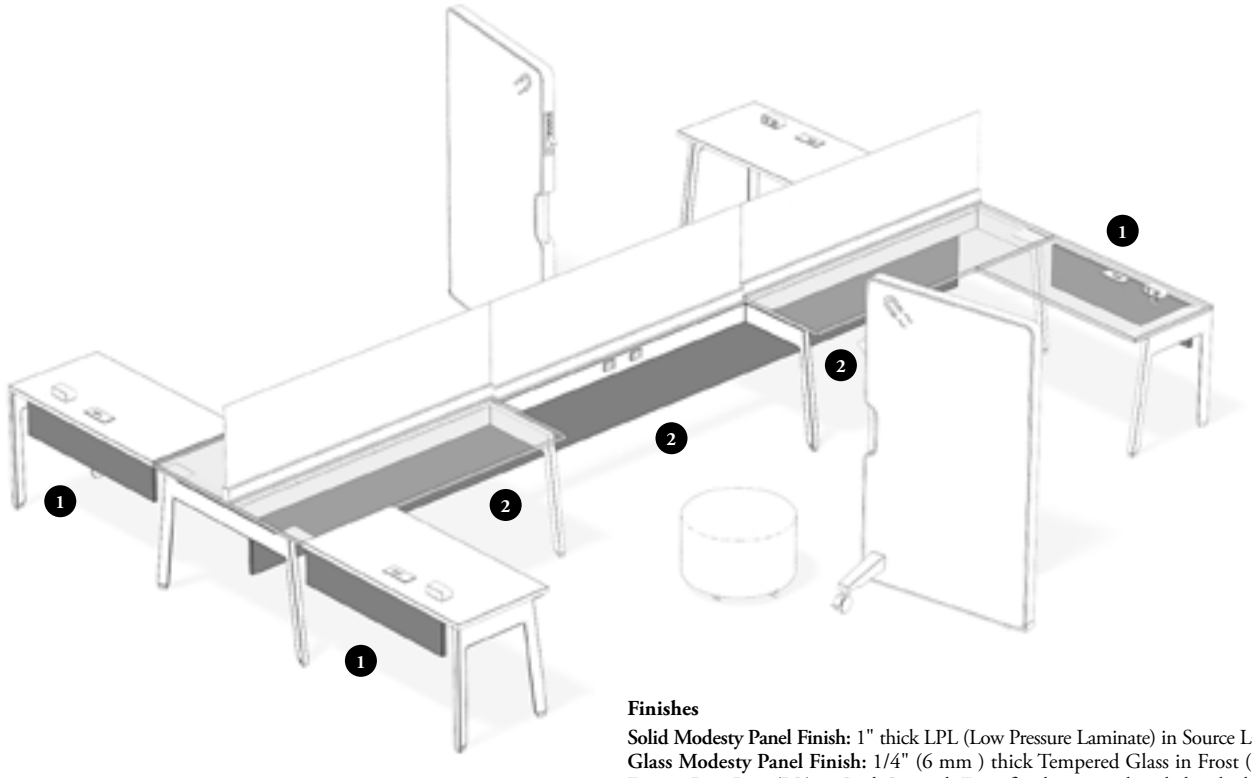

Finishes

Solid Modesty Panel Finish: 1" thick LPL (Low Pressure Laminate) in Source Laminate
Glass Modesty Panel Finish: 1/4" (6 mm) thick Tempered Glass in Frost (FT), Frost – Low Iron (LB) or Back Painted. Frost finish is a single-sided etched tempered glass which is facing inward of workstation

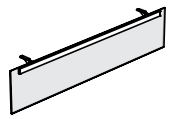

Glass

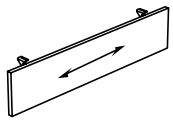

Solid

1 Suspended Modesty Panel – Glass (JNASMG) or Suspended Modesty Panel – Solid (JNASML)

- Provide visual privacy below worksurface
- Can be positioned off-module
- Available in widths 24" to 78" (3" increments)
- Available 10" high
- Available in Standard (S) mounting style
- The Modesty Panel is 18" above finished floor
- Grain direction on Solid Modesty Panel is horizontal

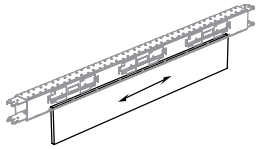

2 Beam-Mounted Modesty Panel – Solid (JNABMS) E-Z compatible

- Provides visual privacy below beam
- Can be placed off-module in 3" increments
- Available in widths 24" to 84" (6" increments)
- Available 14" high
- Can be specified in Single- (S) or Double-Sided (D) configuration
- The Modesty Panel is 10" above finished floor
- Grain direction on Solid Modesty Panel is horizontal

Solid Modesty Panel Finish: 1" thick LPL (Low Pressure Laminate) in Source Laminate

planning with suspended modesty panels

The Suspended Modesty Panel can be mounted under unstructured worksurfaces with various support styles.

- A Beam-Mounted Modesty Panel (JNABSM) is **not** interchangeable with a Suspended Modesty Panel (JNASML or JNASMS)
- The information listed below is applicable with a Single- or Double-Sided Worksurfaces

returns, run-offs, peninsulas & height-adjustable run-off applications

- The modesty panel can be centered and off-module in the open space between freestanding supports and/or freestanding storage
- Are available in 3" increments
- The appropriate width of a Suspended Modesty Panel is determined by substracting the corresponding value of a support style for each end of the worksurface from the open width underneath the worksurface. Use the specification software for a better fit
- The following support styles need a minimum 3" gap:
  - Freestanding Legs – Single- or Double-Sided (JNALS or JNALD)
  - Freestanding Legs – Lateral Cabinet or Peninsula (JNALL or JNALP)
  - Peninsula Monopod Base – Round (JNAPP)
- Storage components, except Storage Cabinet for Height Adjustable Run-Off do **not** need a gap

single-sided configuration

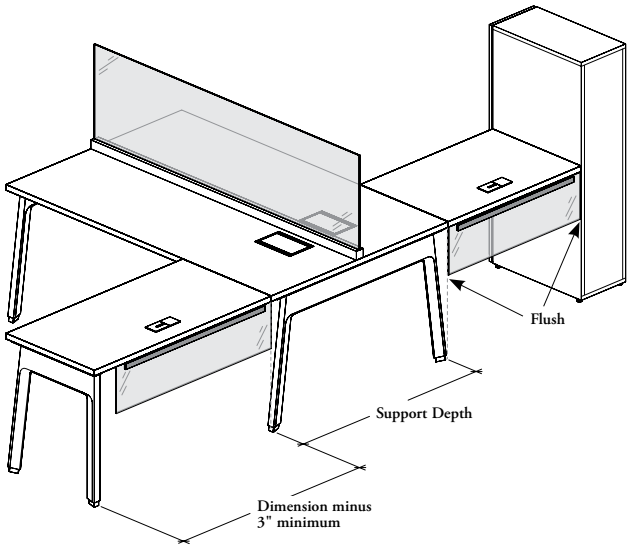

double-sided configuration

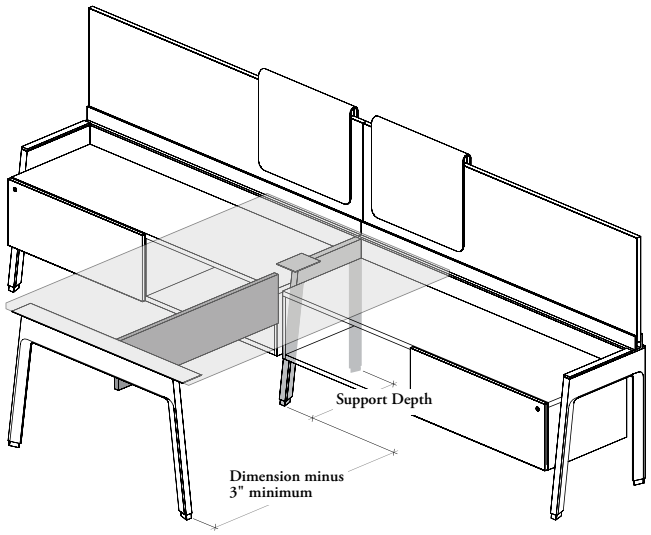

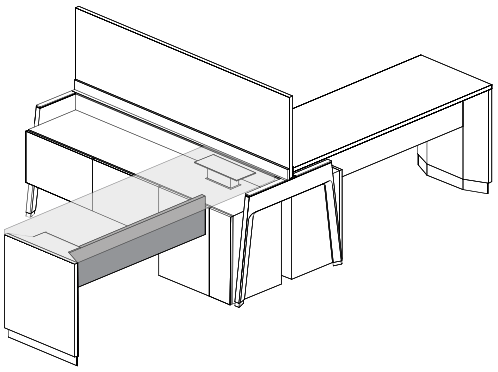

On height adjustable run-offs, the Suspended Modesty Panel must be specified accordingly with the width reductions listed below:

– 18" deep Storage Cabinet for Height-Adjustable Run-Off minus 24"
– 24" deep Storage Cabinet for Height-Adjustable Run-Off minus 30"

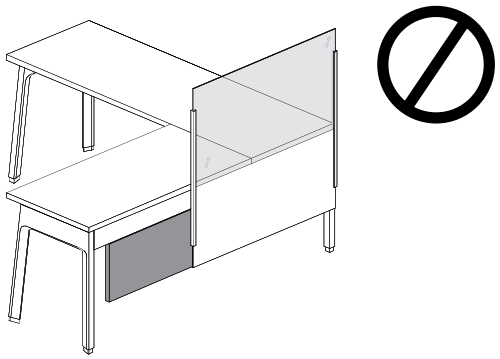

Edge Screens, Elevated Screens, Floor Screens Worksurface- or Beam-Mounted or Corner Elevated Screens **cannot** be used in combination with a Suspended Modesty Panel or Beam-Mounted Modesty Panel

planning with suspended modesty panels (continued)

ez fence run-off applications

- The modesty panel can be centered and off-module in the open space between EZ Fence support
- Are available in 3" increments
- The Suspended Modesty Panel must be positioned in the opening between the fence supporting leg and the run-off support. The width is determined by substracting the appropriate values of each of them. Use the specification software for an optimal fit

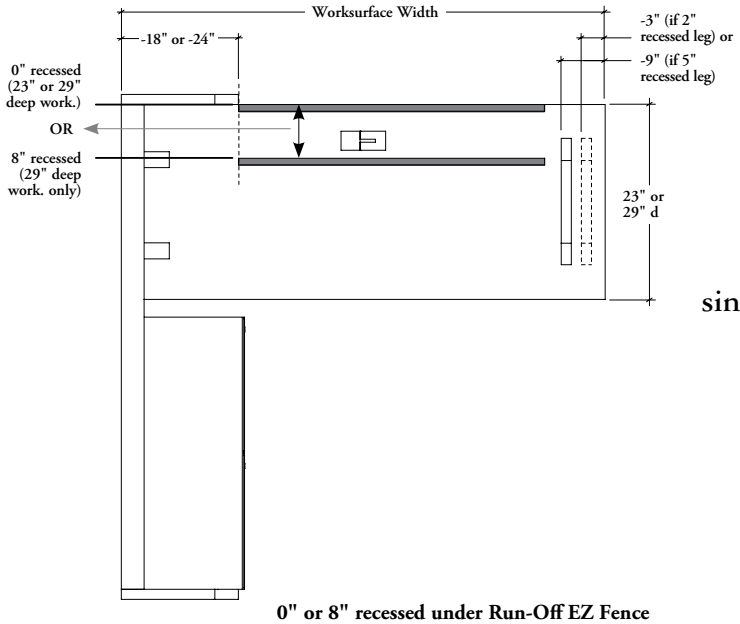

single-sided configuration

0" or 8" recessed under Run-Off EZ Fence (JZWRF) (Bottom View)

No recess on is allowed on 23" deep worksurfaces

or

A 8" recess from the back edge is allowed on 29" deep worksurfaces

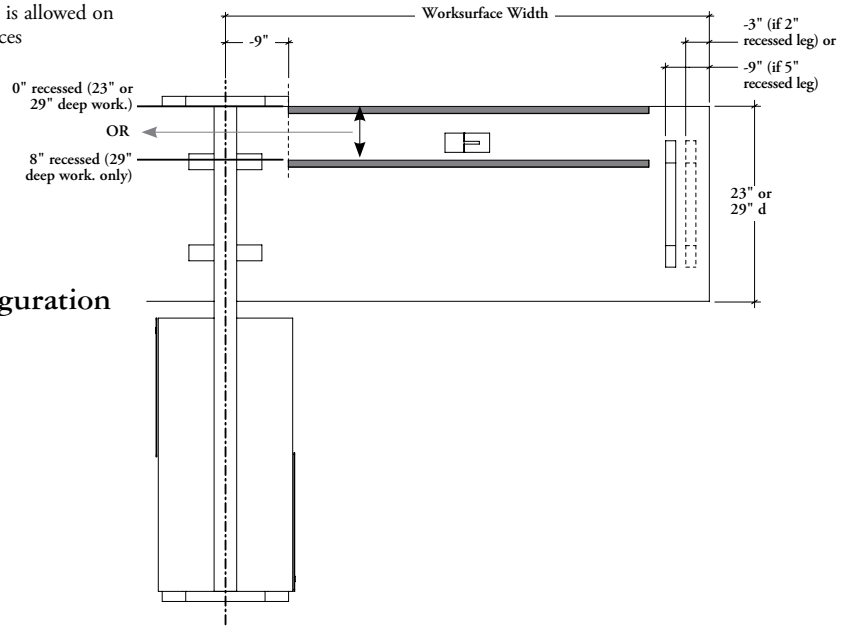

shared configuration

planning with beam-mounted modesty panel

The beam-mounted modesty panel can be mounted under Structural Beams or EZ Fence Beams with various support styles.

A Suspended Modesty Panel (JNASML or JNASMS) is **not** interchangeable with a Beam-Mounted Modesty Panel (JNABMS)

desk structure applications

- The modesty panel can be centered and off-module with 3" increments in the open space between structural supports
- Are available in 6" increments
- The appropriate width of a Beam-Mounted Modesty Panel is determined by substracting the corresponding value of a support style for each end of the Structural Beam from nominal width of the beam. Use the specification software for a better fit

single-sided configuration

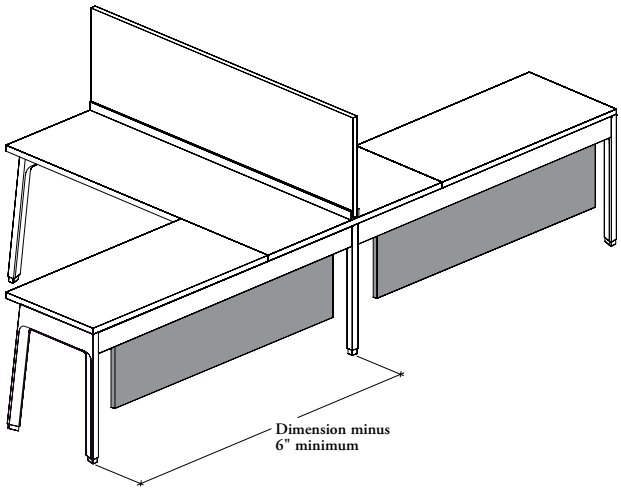

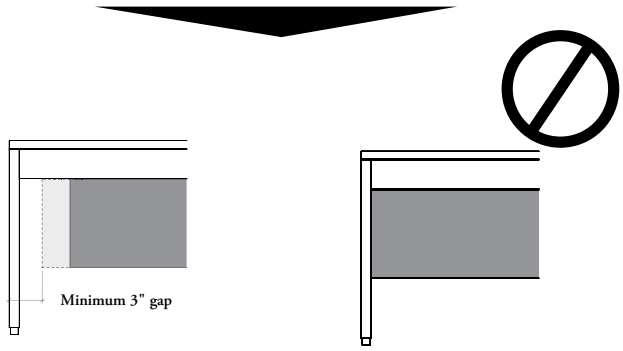

The following support styles need a minimum 3" gap:

– Structural Post (JNDPU)
– Structural Post with Front Leg (JNDPF)
– Structural Leg – Single-Sided (JNDLS)

double-sided configuration

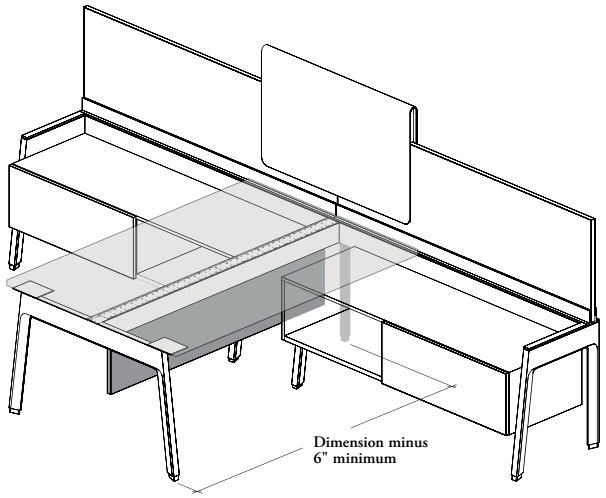

When specified Full Width with End Leg

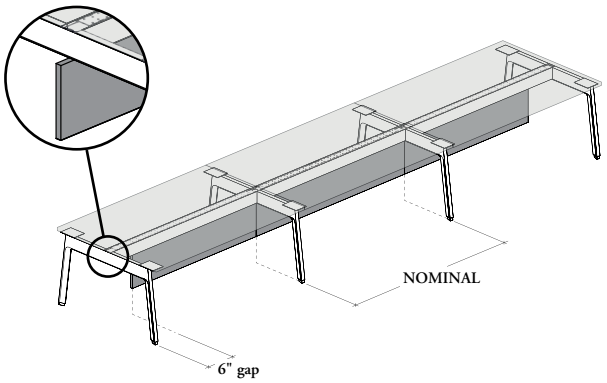

When between two of the following supports, the modesty panel can be specified full width. For an aesthetic look in end of runs, unless a screen is covering the end leg, a 6" gap is recommended:

– End Structural Leg – Double-Sided (JNDLD)
– End Structural Legs – Fence, Beam-Mounted Cabinet or Peninsula (JNDLF, JNDLL or JNDLP)
– In-Line Structural Leg – Double-Sided (JNDLD)
– In-Line Structural Leg – Fence (JNDLF)

planning with beam-mounted modesty panel (continued)

ez fence structure applications

- The modesty panel can be centered and off-module in the open space between EZ Fence supports
- Are available in 6" increments
- The recommended width for the Beam-Mounted Modesty Panel is the same than the EZ Fence Beam
- The following support styles **do not** need a width reduction:
  – Standard EZ Fence Leg (JZSFS)
  – EZ Structural Legs – Single- or Double Sided (JZSLS or JZSLD)
- When used with EZ Fence Post (JZSPS) the modesty panel needs to be specified 6" shorter

single-sided configuration

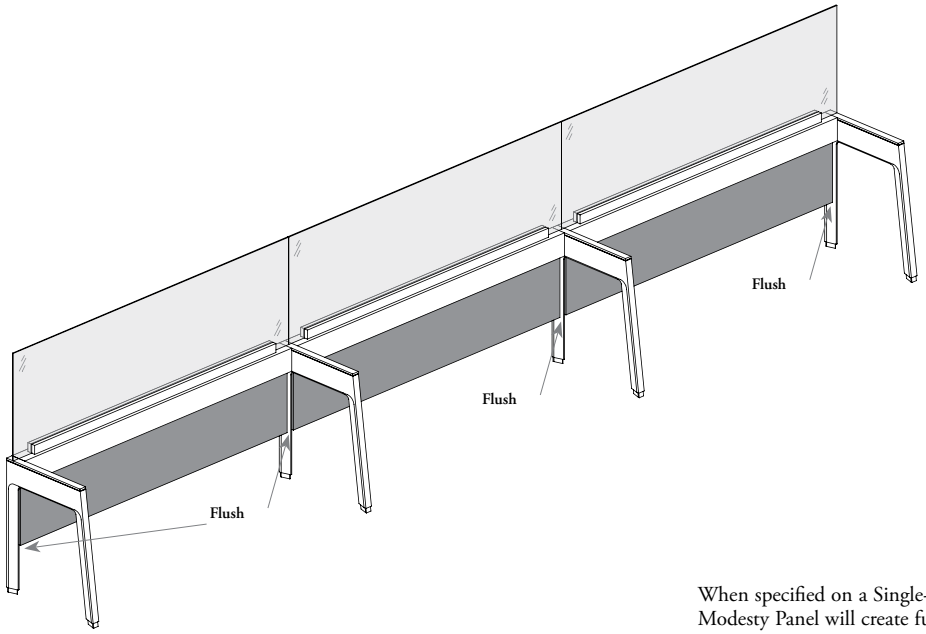

When specified on a Single-Sided EZ Fence Structure, the Beam-Mounted Modesty Panel will create full privacy between the supports

planning with beam-mounted modesty panel (continued)

shared configuration

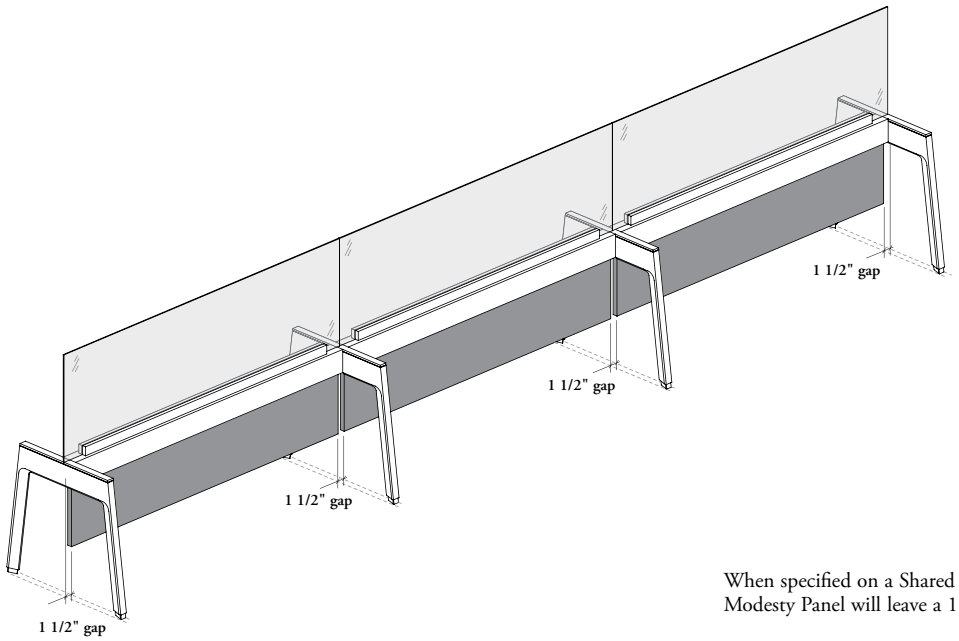

When specified on a Shared EZ Fence Structure, the Beam-Mounted Modesty Panel will leave a 1 1/2" gap at each support

single-sided or shared configuration

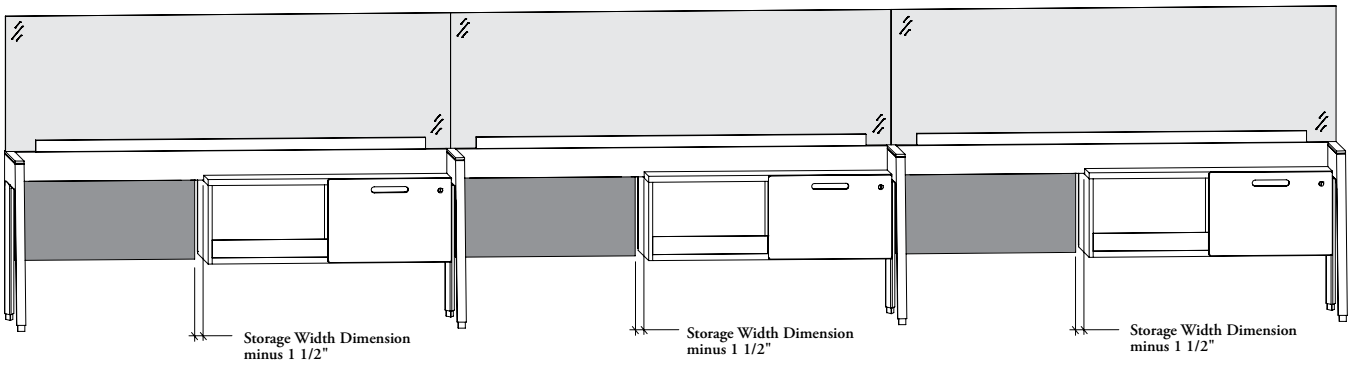

When specified on next to a EZ Fence Suspended Storage, the Beam-Mounted Modesty Panel should be reduced by the width of the storage. It will leave 1 1/2" gap between the Modesty Panel and the storage

workstation screens

workstation screens

UNDERSTANDING WORKSTATION SCREENS 446

ADD-ON SCREEN – BEAM- OR WORKSURFACE-MOUNTED BASICS . . 447

UNDERSTANDING WIDTH REDUCTION FOR LATERAL APPLICATION – WORKSURFACE-MOUNTED 450

PLANNING WITH ADD-ON SCREEN – WORKSURFACE-MOUNTED . . 454

UNDERSTANDING WIDTH REDUCTION FOR ADD-ON SCREEN – BEAM-MOUNTED 458

PLANNING WITH ADD-ON SCREEN – BEAM-MOUNTED 460

GLASS EDGE SCREEN – WORKSURFACE-MOUNTED BASICS 463

PLANNING WITH GLASS EDGE SCREEN – WORKSURFACE-MOUNTED . 464

ELEVATED SCREEN – BEAM- OR WORKSURFACE-MOUNTED BASICS. 466

UNDERSTANDING BEAM- OR WORKSURFACE-MOUNTING STYLE FOR ELEVATED SCREENS. 470

UNDERSTANDING WIDTH EXTENSION FOR CORNER APPLICATION – ELEVATED SCREENS – BEAM- OR WORKSURFACE-MOUNTED . . . 472

UNDERSTANDING ELEVATED SCREEN – BEAM- OR WORKSURFACE-MOUNTING STYLE SPECIFICATION. 473

workstation screens (continued)

PLANNING WITH ELEVATED SCREENS – BEAM- OR WORKSURFACE-MOUNTED 475

FELT CORNER ELEVATED SCREEN BASICS 479

UNDERSTANDING BEAM- OR WORKSURFACE-MOUNTING STYLE FOR FELT CORNER ELEVATED SCREEN. 481

PLANNING WITH FELT CORNER ELEVATED SCREENS. 482

FELT END SCREEN – WORKSURFACE-MOUNTED BASICS 483

PLANNING WITH FELT END SCREEN – WORKSURFACE-MOUNTED . 484

FLOOR SCREEN – BEAM- OR WORKSURFACE-MOUNTED BASICS . . 485

UNDERSTANDING BEAM- OR WORKSURFACE-MOUNTING STYLE FOR FLOOR SCREENS 488

UNDERSTANDING WIDTH EXTENSION FOR CORNER APPLICATION – FLOOR SCREENS – BEAM- OR WORKSURFACE-MOUNTED . . . 489

UNDERSTANDING FLOOR SCREEN – BEAM- OR WORKSURFACE-MOUNTING STYLE SPECIFICATION. 490

PLANNING WITH FLOOR SCREENS – BEAM- OR WORKSURFACE-MOUNTED 492

workstation screens (continued)

PLANNING WITH FLOOR SCREENS – WORKSURFACE-MOUNTED – CABLE PASS-THROUGH 497

SCREEN ACCESSORY BASICS 498

PLANNING WITH LINKING DEVICES 499

understanding workstation screens

Expansion Cityline offers a variety of workstation screens for space division. They provide user visual and territorial privacy and a lighter aesthetic for both divisional and complementary applications.

Screens in this section are **NOT** compatible with EZ Fence Structure.

Alignment of two contiguous screens is enhanced by different devices for Laminate, Fabric and Glass screen materials. Expansion Cityline also allows mixing screen styles and materials in the same workstation given that product dimensioning has been taken into account for that purpose. However, alignment of consecutive screens can only be done within same screen height, style and material

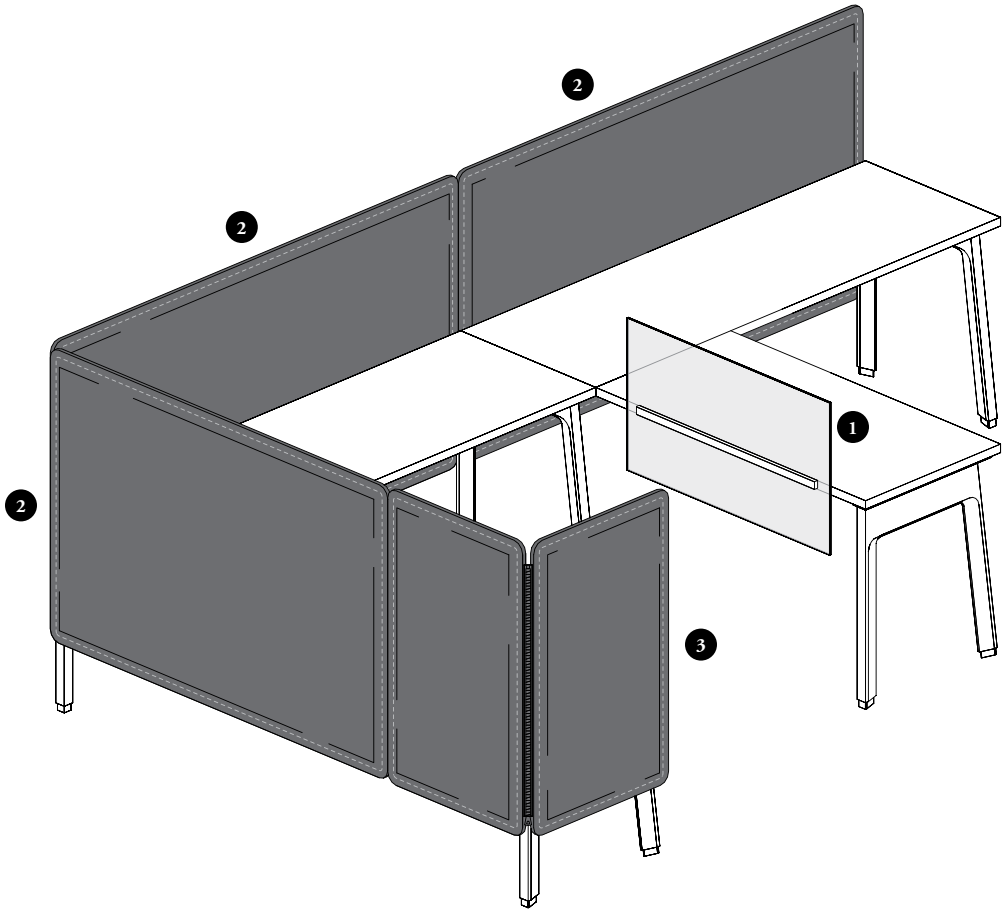

Six main applications:

Add-On Screens – Create seated privacy and space division above Structural Beams (JNDBB or JNDCB) or worksurfaces – Solid, Glass, Fabric or Felt finishes

1 **Edge Screen –** Provides a territorial screen between users when mounted to the back edge of unstructured worksurfaces – Glass finishes

Elevated Screens – Create privacy and physical separation between workstations or corridor when overlaid on Structural Beams (JNDBB or JNDCB) or worksurfaces – Solid, Glass, Fabric or Felt finishes

2 **Floor Screens –** Provide privacy from floor level when mounted to Structural Beams (JNDBB or JNDCB) or worksurfaces – Solid screen with or without Glass finishes

3 **Felt Corner Elevated Screen –** Is a light-weight corner space division that is attached to the Structural Beam (JNDBB or JNDCB) & leg or worksurface edge & leg – Available in Felt finishes

Felt End Screen – Creates privacy and physical separation with corridor when mounted to the lateral edge of worksurfaces – Felt finishes

add-on screen – beam- or worksurface-mounted basics

Add-On Screens mount onto Single- or Double-Sided worksurfaces or Structural Beams. Theses screens provide visual and territorial privacy.

- Datum heights of Add-On Screens match with Datum heights of Elevated and Floor Screens
- Starting height depends on mounting style
- Three mounting styles are available:

Beam-Mounted: Can be specified 28" Standard Height (C) or 18" Low Height (L) on Single- or Double-Sided Structural Beam (JNDBB) or Chicago Structural Beam (JNDCB)

Worksurface-Mounted: Can be installed on back of Single-Sided Worksurfaces and centered on Double-Sided Worksurfaces using screen mounting holes. Other positions like ends or junctions of worksurfaces are possible but require carefulness of installers

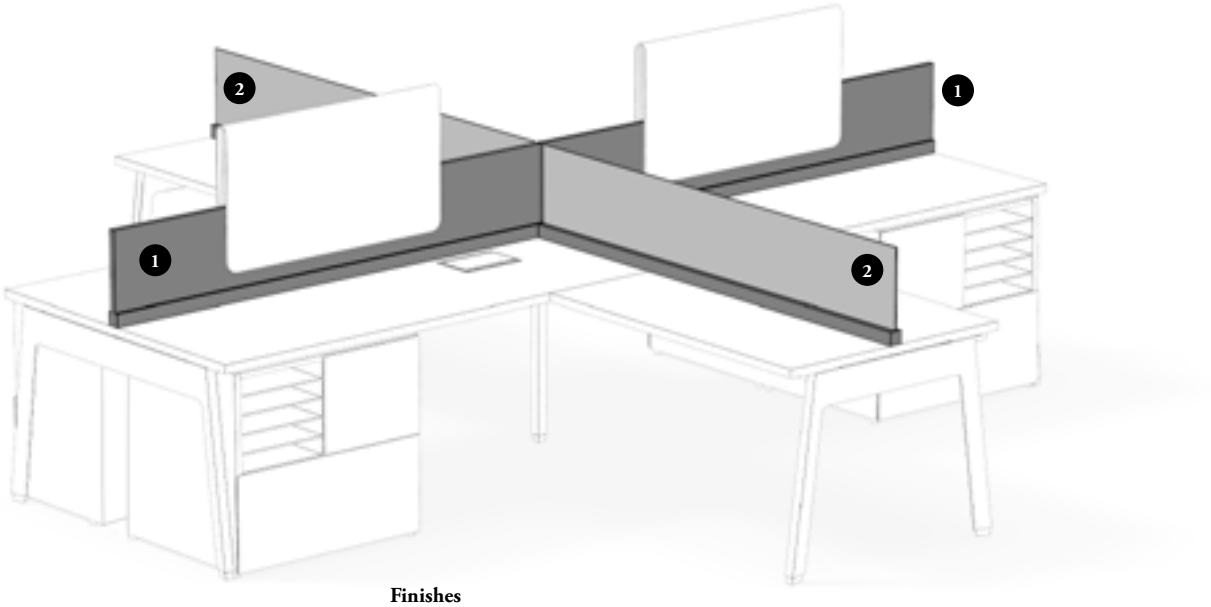

Finishes

Frame (if applicable) & Hardware Finishes: Foundation, Mica and Accent
Solid Finishes: Source Laminate
Glass Finishes: Clear (CL), Frost (FT), Satin (FB), Clear – Low Iron (LA)* or Frost – Low Iron (LB)*
* Low Iron Glass Finishes reduce the greenish render of standard glass. They should be specified anytime this product is installed on the same workstation than a Glass Elevated Screen
Fabric Finishes: Teknion Standard Panel Fabrics
Felt Finishes: Loft colors. Two-sided finished products have same finish on both sides
Stitches Finishes: Carbon Coordinate (C), Shale Coordinate (E), Carrara Coordinate (G) or Umber Coordinate (M)

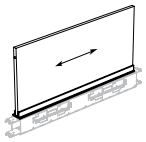

Beam-Mounted (JNSASB)

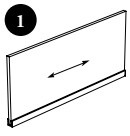

Worksurface-Mounted (JNSASW)

Solid Add-On Screen – Beam-Mounted (JNSASB) or
Solid Add-On Screen – Worksurface-Mounted (JNSASW)

- Provide solid space division, visual privacy and support for complementary screens
- Available 1" thick and two-sided finished
- When applicable, 42", 51" and 57" high datum are available
- Come with Standard Corner Details (S)
- When applicable, screen ends can be specified With (W) or Without (N) Alignment Holes to allow installation of Linking Devices
- Grain direction on Solid Add-On Screen is horizontal

Beam-Mounted only

- Widths include 24" – 84" (6" increments)

Worksurface-Mounted only

- Widths include 18" – 84" (3" increments)

add-on screen – beam- or worksurface-mounted basics (continued)

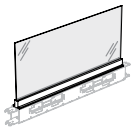

Beam-Mounted (JNSAGB)

2

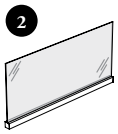

Worksurface-Mounted (JNSAGW)

Glass Add-On Screen – Beam-Mounted (JNSAGB) or Glass Add-On Screen – Worksurface-Mounted (JNSAGW)

- Provide glass space division
- Available with a 1/4" (6 mm) thick tempered glass
- Low Iron Glass Finishes reduce the greenish render of standard glass. They should be specified anytime this product is installed on the same workstation than a Glass Elevated Screen
- 42" and 51" high datum are available
- Come with Standard Corner Details (S)

Beam-Mounted only

- Widths include 24" – 84" (6" increments)

Worksurface-Mounted only

- Widths include 18" – 84" (3" increments)

- Following products provide fabric or felt space division, visual privacy and noise reduction control
- Are tackable on both sides

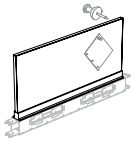

Beam-Mounted (JNSAFB)

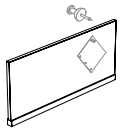

Worksurface-Mounted (JNSAFW)

Fabric Add-On Screen – Beam-Mounted (JNSAFB) or Fabric Add-On Screen – Worksurface-Mounted (JNSAFW)

- When applicable, 42", 51" and 57" high datum are available
- Come with Standard Corner Details

Beam-Mounted only

- Widths include 24" – 84" (6" increments)

Worksurface-Mounted only

- Widths include 18" – 84" (3" increments)

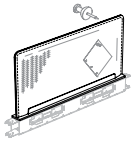

Beam-Mounted (JNSABE)

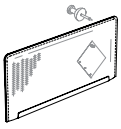

Worksurface-Mounted (JNSAEW)

Felt Add-On Screen – Beam-Mounted (JNSABE) or Felt Add-On Screen – Worksurface-Mounted (JNSAEW)

- 42", 51" and 57" high datum are available
- Come with Radius Corner Details (R)
- Three Top Cover End Cap options are available:
  - No End Cap (N)
  - One End Cap (O)
  - Two End Caps (T)

Beam-Mounted only

- Widths include 24" – 84" (6" increments)

Worksurface-Mounted only

- Widths include 18" – 84" (3" increments)

add-on screen – beam- or worksurface-mounted basics (continued)

datum heights & alignment

- Solid, Fabric or Felt Add-On Screens match Teknion standard datum heights of 42", 51" and 57" when mounted on worksurfaces or Structural Beams, except Glass Add-On Screen with Beam- or Worksurface-Mounted and Add-On Screen – with Beam-Mounted Low Height that matches standard datum height of 42" and 51" only
- Screen Mounting Holes can be specified on worksurfaces. For details, refer to page 455

Solid, Glass or Fabric Finish

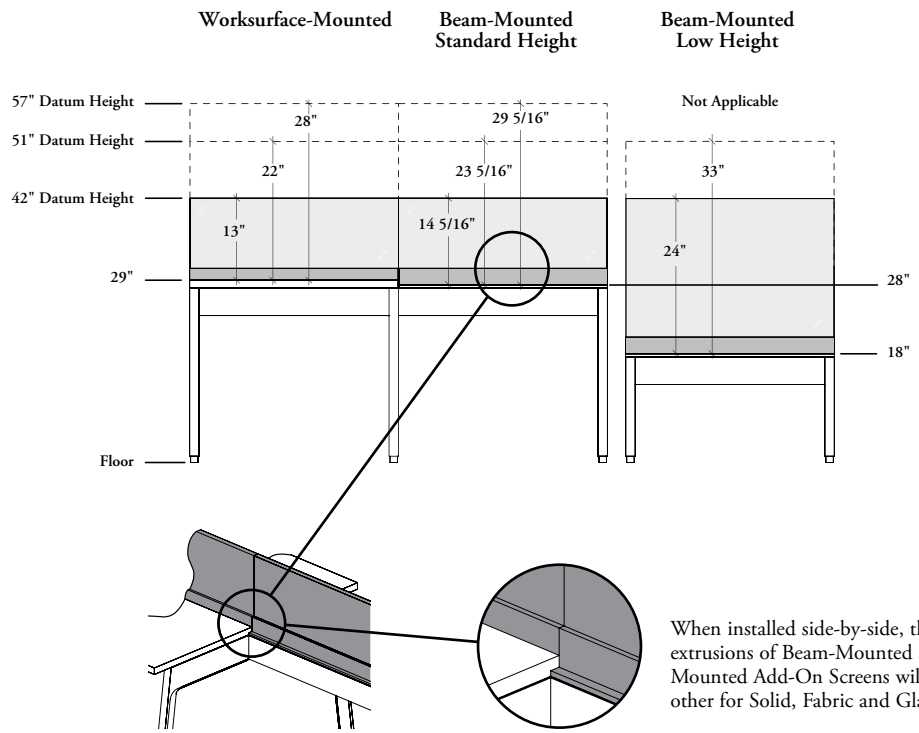

When installed side-by-side, the mounting extrusions of Beam-Mounted and Worksurface-Mounted Add-On Screens will align with each other for Solid, Fabric and Glass materials

- Alignment of two contiguous screens is enhanced by different devices for Solid, Fabric and Glass screen materials
- Alignment of consecutive screens can only be done within same screen height, style and material
- Alignment of Beam-Mounted and Worksurface-Mounted Add-On Screens of the same material is **not** always guaranteed for all workstation configurations. Refer to page 455 for details
- The Alignment Holes option must be specified on Solid Screens to allow the installation of the linking devices
- Fabric Screens always come with linking devices which can be used or not at installation
- Linking Strip for Glass Screens can be specified separately. Refer to page 499 for details
- Solid, Fabric and Glass Add-On Screens **cannot** be connected in 90° corners

Felt Finish

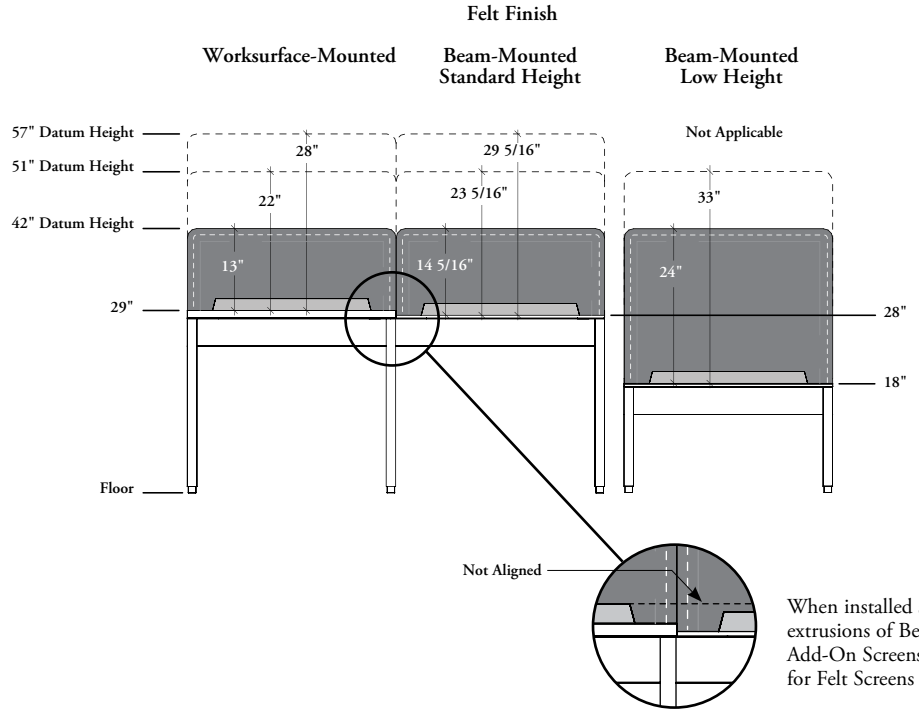

When installed side-by-side, the mounting extrusions of Beam- or Worksurface-Mounted Add-On Screens will **not** align with each other for Felt Screens

- Felt Screens have a casual look and feel and **cannot** be connected for alignment. However, they can be placed side-by-side or in contiguous combination with other screen materials
- Felt Add-On Screens **cannot** be connected in 90° corners and only provides casual fit in these applications. Refer to page 452 for details on corner specification

understanding width reduction for lateral application – worksurface-mounted

The following should considered when specifying Worksurface-Mounted Add-On Screens.

- **Cannot** span across two parallel worksurfaces but can span across two perpendicular worksurfaces
- Solid, Fabric and Glass Screen mounting extrusions are all of the same dimension, therefore, the mix of these three materials in 90° junctions is optimal when appropriate width reduction for lateral application is specified
- Gaps between two substrates in 90° junctions depend on material thicknesses
- The applications illustrated below are applicable with Solid, Glass or Fabric Worksurface-Mounted Add-On Screens that are installed on standard worksurfaces only. Refer to page 457 for specification on Exposed Beam Worksurfaces

solid, glass or fabric add-on screens

single-sided workstation applications

Below are two specification examples showing the use of Width Reduction for Lateral Application. First one is optimized against a parallel wall and second one is optimized along a corridor

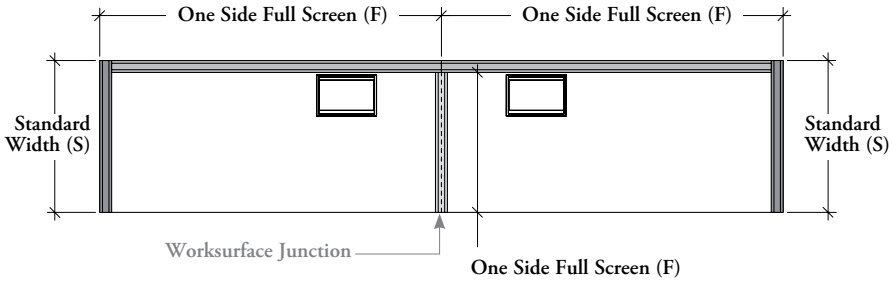

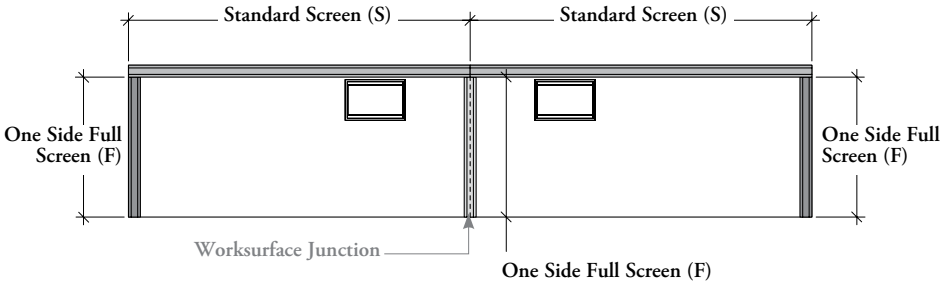

Four reduction options are available:

Standard Width (S)

- The screen comes flush on both ends. Screen matches width or depth of worksurface
- Can be specified on-module with standard worksurfaces or off-module in casual applications

One Side Full Screen or Both Sides Shared Screens (F)

- The One Side Full Screen option can be specified flush on one end and recessed of a full screen base thickness at other end
- The Both Sides Shared Screens option can be specified recessed of half of the base thickness at both ends
- These two options are combined within one configuration as the resulting dimension is the same
- This configuration enables 90° junctions and can be specified with:
  - Solid Add-On Screen Worksurface-Mounted
  - Glass Add-On Screen Worksurface-Mounted
  - Fabric Add-On Screen Worksurface-Mounted

One Side Shared Screen (H)

- The panel can be specified flush one end and recessed of half of the base thickness at other end
- This configuraiton is more often used on double-sided workstations. An example can be seen on next page
- Can be specified with:
  - Solid Add-On Screen Worksurface-Mounted
  - Glass Add-On Screen Worksurface-Mounted
  - Fabric Add-On Screen Worksurface-Mounted

understanding width reduction for lateral application – worksurface-mounted (continued)

solid, glass or fabric add-on screens (continued)

double-sided workstation applications

Below are two specification examples showing the use of Width Reduction for Lateral Application. First one demonstrates its use in conjunction with Leg-Mounted Elevated or Floor Screens (**not** shown) and second one is optimized for an all Worksurface-Mounted-Add-On-Screen application

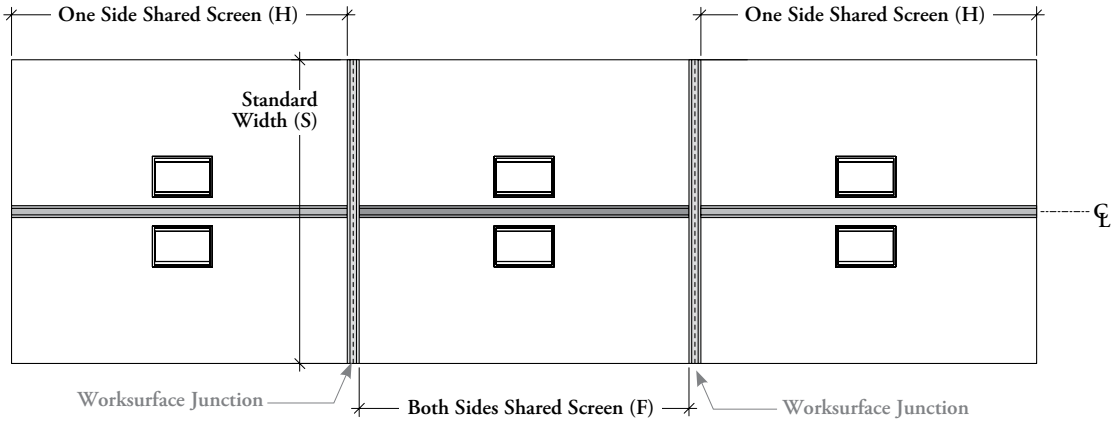

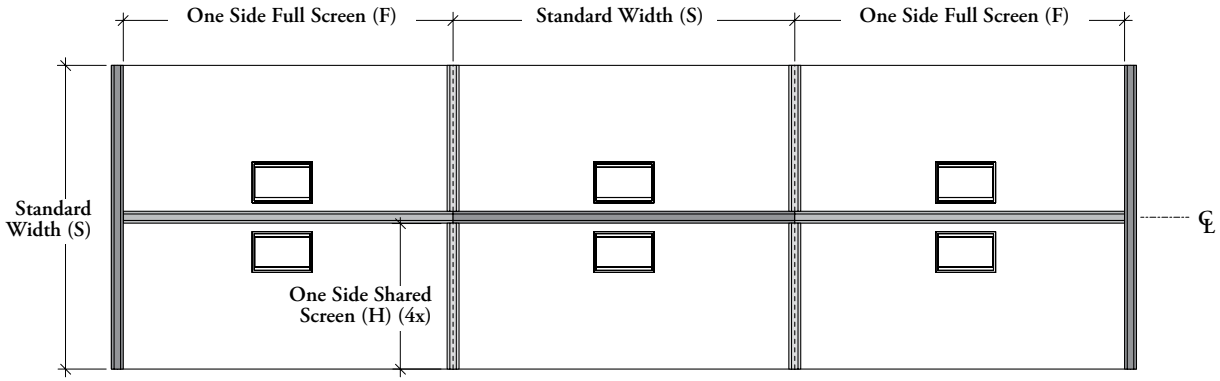

understanding width reduction for lateral application – worksurface-mounted (continued)

- Felt Add-On Screens must be specified narrower when used as perpendicular territorial screens. Width Reductions for Lateral Application are **not** available on Felt Screens
- Linear planning allows using full-width Felt Screens, however, perpendicular planning will remain casual
- The applications below show the specification of Felt Add-On Screens in Single- or Double-Sided configuration of standard worksurfaces. Refer to page 457 for specification on Exposed Beam Worksurfaces

felt add-on screens gap management – without screen mounting holes

Perpendicular felt screens are narrower than available space on worksurfaces. Different gap management can be chosen when the worksurface is specified with No Mounting Holes option

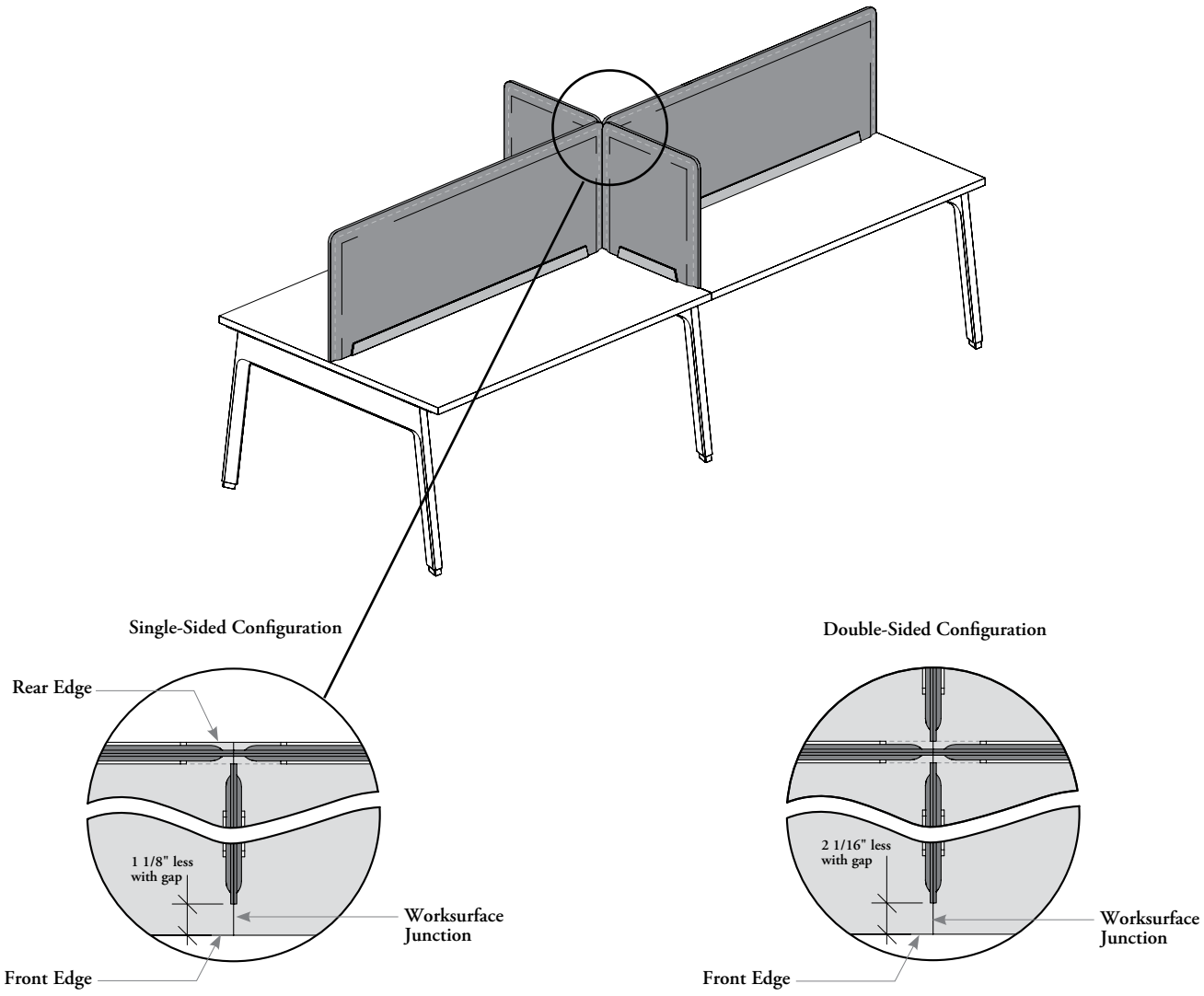

Total gap shown above can be either positioned on front edge side or back screen side when the worksurface is specified with No Mounting Holes option. It could as well be spread in two. Desired positioning should be shown on specification plan and supplied to the installers

understanding width reduction for lateral application – worksurface-mounted (continued)

felt add-on screens gap management – with screen mounting holes

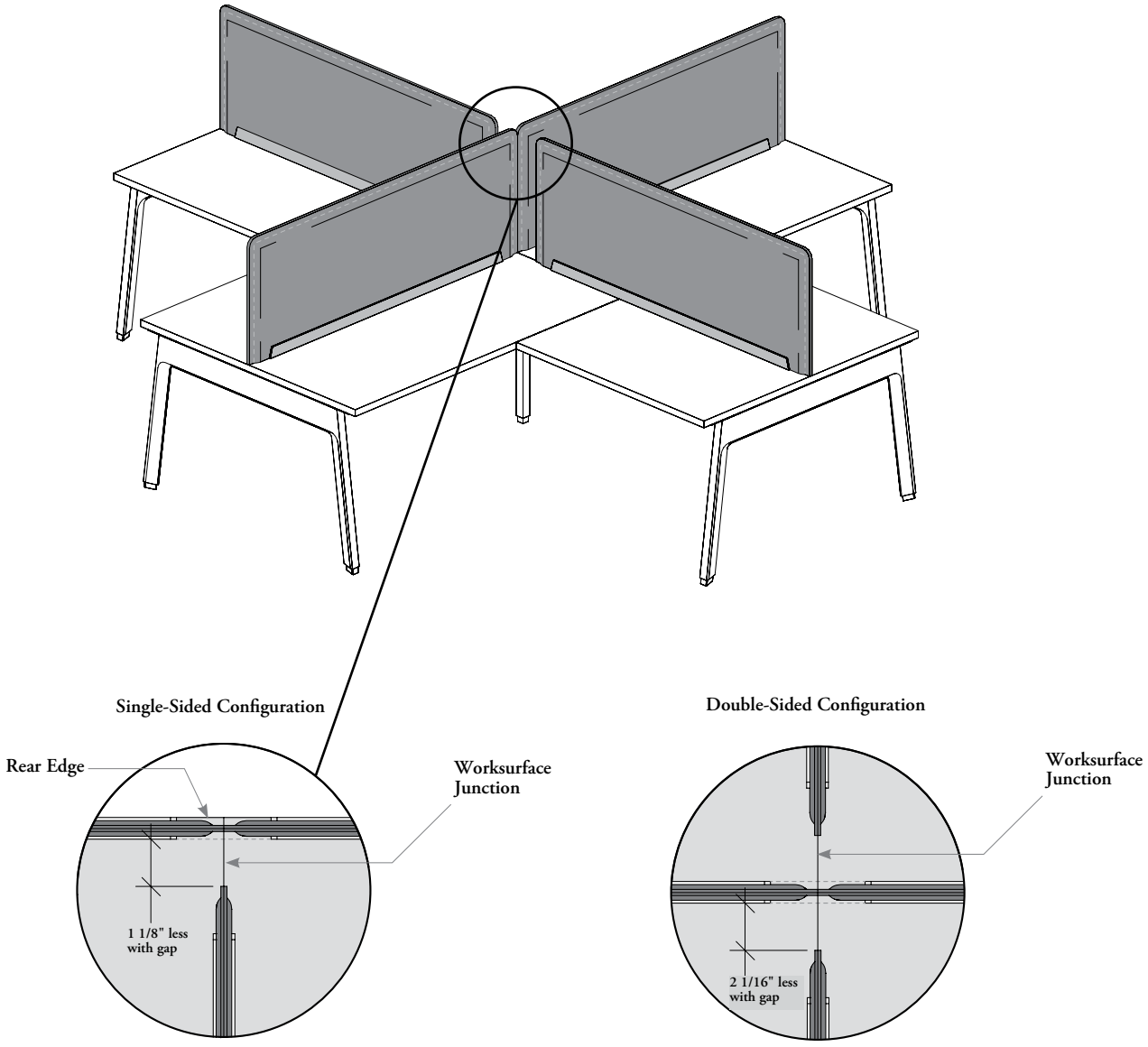

Total gap shown above will be positioned on back screen side when the worksurface is specified with With Mounting Holes option. It could be positioned differently if No Mounting Holes option is selected and desired positioning should be shown on specification plan and supplied to the installers

planning with add-on screen – worksurface-mounted

Add-On Screens – Worksurface-Mounted attach to the worksurface to provide central or lateral space division and privacy. The following should be considered when planning with Add-On Screens – Worksurface-Mounted.

- Worksurface-Mounted Add-On Screens can be used off-module on any worksurface style. On-module application is possible only on standard Rectangular Worksurfaces (Non-Exposed Beam)
- When an add-on screen is mounted on a Single-Sided Worksurface, use the Floor Screen stability rule on page 494. When it is used on a Single-Sided Worksurface in combination with a modesty panel, use the Elevated Screen stability rule on page 477.
- **Not** recommended for Peninsula Worksurfaces or Height-Adjustable Run-Offs, no mounting holes provided
- **Cannot** be mounted on Elevated or Floor Screens

with standard worksurface applications

Back or Central Territorial Screens

Add-On Screens can be mounted on- or off-module but **cannot** span across two parallel worksurfaces

Single-Sided Configuration

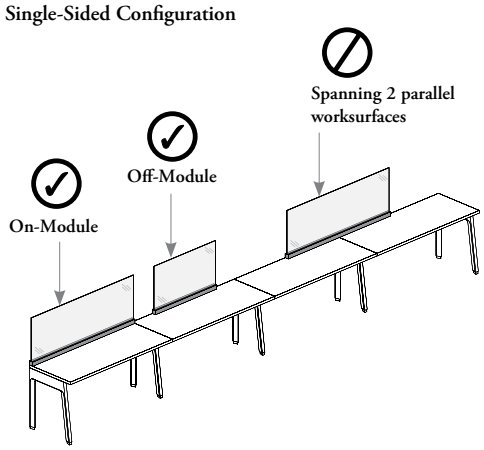

In Single-Sided configuration, screen base is mounted flush with the rear edge of worksurface

Double-Sided Configuration

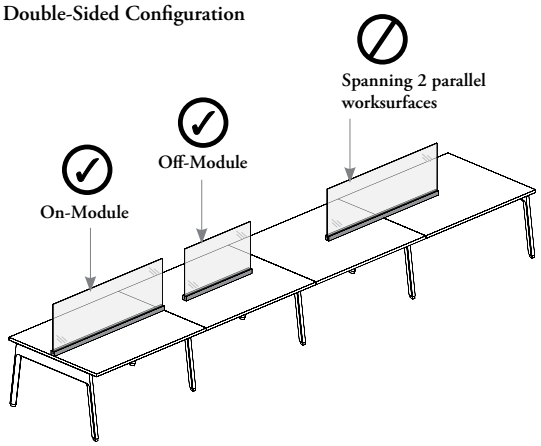

In Double-Sided configuration, the screen is centered along the worksurface

Perpendicular Territorial Screens

- Widths are available to provide partial or full depth privacy, except with Felt
- Illustrations below are applicable on Single- and Double-Sided Worksurfaces

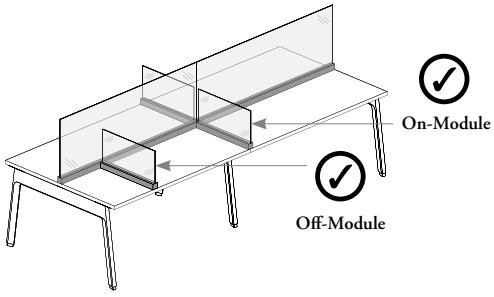

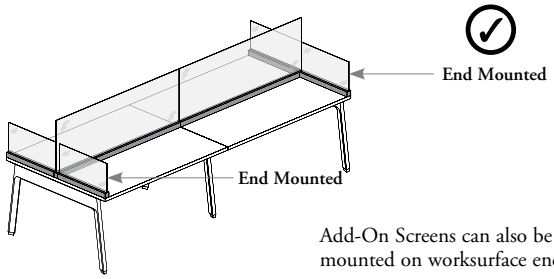

Add-On Screens can also be mounted on worksurface ends

- Add-On Screens can be mounted on- or off-module
- Add-On Screens can be mounted at the junction of two worksurfaces or anywhere on the same worksurface

Add-On Screens **cannot** be installed on Writable Glass Worksurfaces

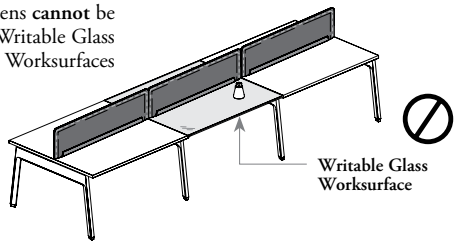

planning with add-on screen – worksurface-mounted (continued)

When a screen is installed on-module, the screen mounting holes should be specified on the worksurface. The holes improve positioning and alignment of Add-On Screens on worksurfaces. Refer to the Worksurfaces section for details

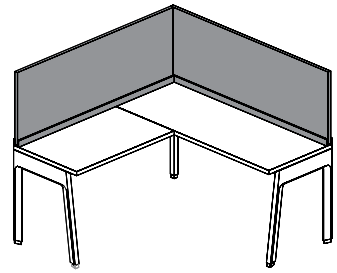

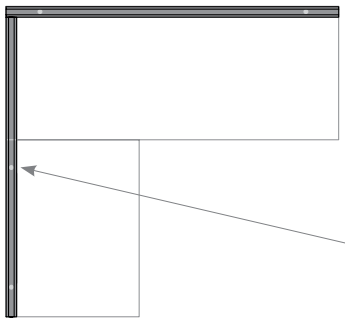

- Add-On Screens can span across two perpendicular Single- or Double-Sided Worksurfaces
- Screen Mounting Holes return worksurfaces will improve the positioning and alignment of screens

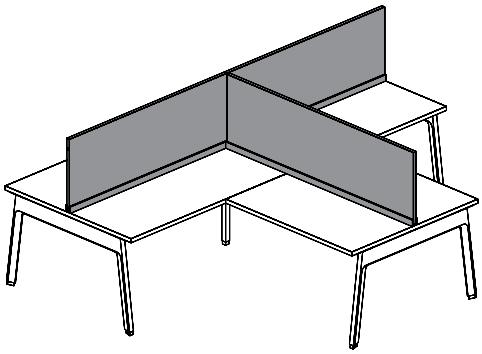

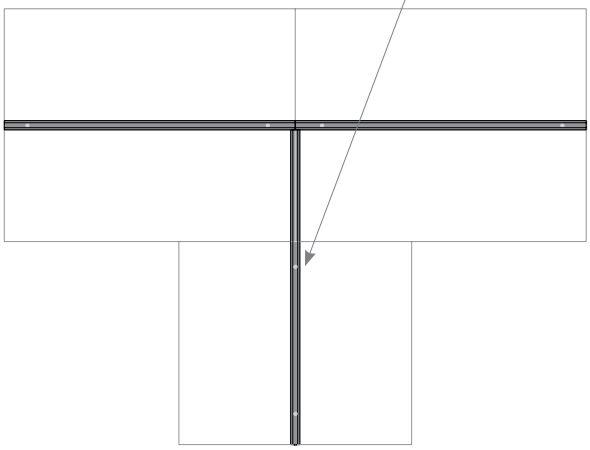

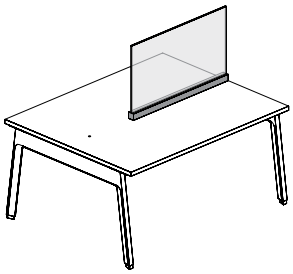

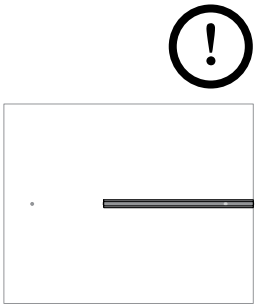

Screen mounting Holes may improve the positioning of Add-On Screens but alignment remains in the hands of installers. Caps are provided with worksurfaces for unused holes

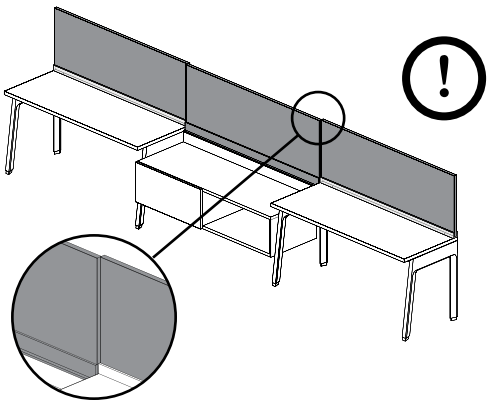

Screen Mounting Holes on Single-Sided Worksurfaces will **not** align with Beam-Mounted Add-On Screens. Worksurface-Mounted Screens can be installed aligned with Beam-Mounted screens if mounting holes and Access Door are **not** specified. This will sacrify approximately 13/16" of space on worksurface

planning with add-on screen – worksurface-mounted (continued)

Are available in various widths to provide different levels of privacy and the ability to accommodate mounted storage

with standard worksurface with mounted storage applications

single-sided mounted storage applications

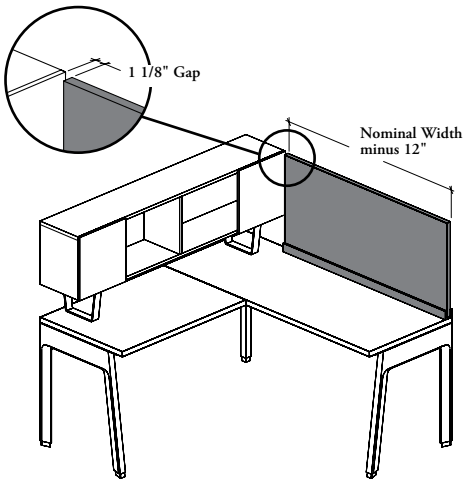

- With Single-Sided Elevated Slim Cabinets, Add-On Screens must be specified Nominal Width minus 12"
- Remaining gap is 1 1/8" with thickest Fascia Option

shared mounted storage applications

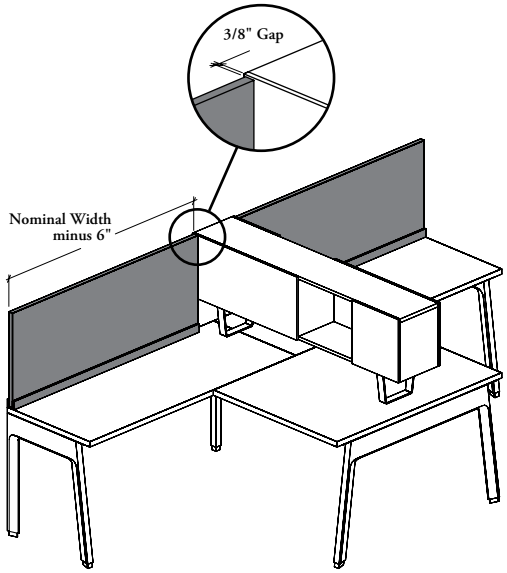

- With Shared Elevated Slim Cabinets, Add-On Screens must be specified Nominal Width minus 6"
- Remaining gap is 3/8" with thickest Fascia Option

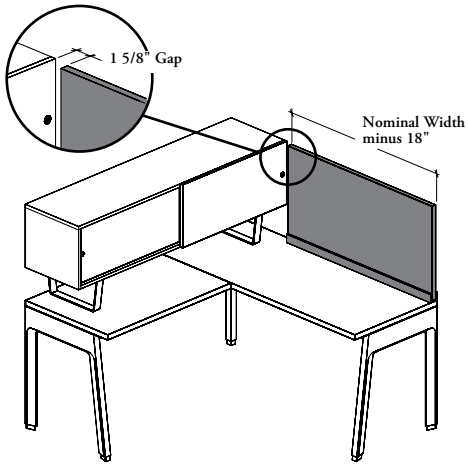

- With Single-Sided Elevated Cabinets or Desktop Cabinets, Add-On Screens must be specified Nominal Width minus 18"
- Remaining gap is 1 5/8" with thickest Door Style

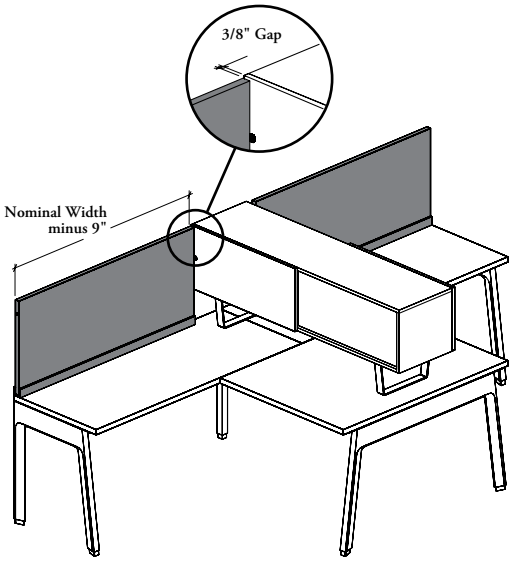

- With Shared Elevated Cabinets or Desktop Cabinets, Add-On Screens must be specified Nominal Width minus 9"
- Remaining gap is 3/8" with thickest Door Style

planning with add-on screen – worksurface-mounted (continued)

- **Worksurface**-Mounted Add-On Screens **cannot** be installed on-module with Exposed Beam Worksurfaces, screen width must be specified accordingly with the following considerations
- Screens can be installed flush with worksurface end opposite to exposed beam. In this case, mounting holes will improve positioning and alignment

with exposed beam worksurface applications

single-sided workstation applications

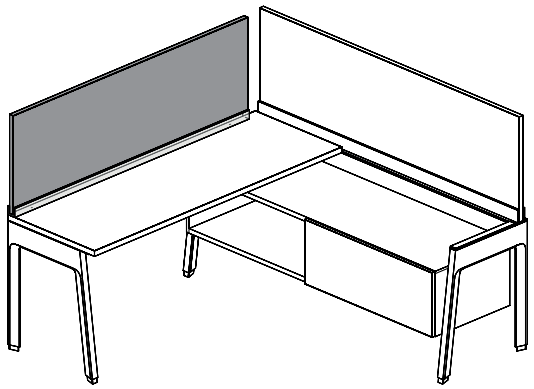

- Add-On Screens can also be specified with Exposed Single-Sided Beam Worksurfaces. Screens must be specified Nominal Width minus 6"
- Remaining gap with beam is approximately 2 3/8"
- Screens **cannot** exceed worksurfaces
- Mounting Holes should not be specified if the desired positioning is different than flush with the opposite end of the exposed beam

double-sided workstation applications

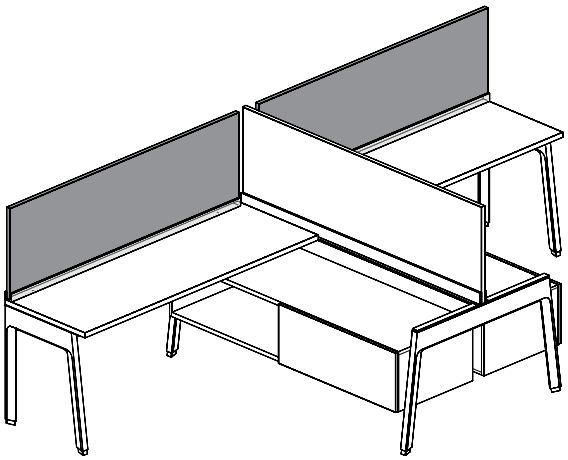

- Add-On Screens can also be specified with Exposed Double-Sided Beam Worksurfaces. Screens must be specified Nominal Width minus 3"
- Remaining gap with beam is approximately 1 1/4"
- Screens **cannot** exceed worksurfaces and **cannot** span over beam
- Mounting Holes should not be specified if the desired positioning is different than flush with the opposite end of the exposed beam

understanding width reduction for add-on screen – beam-mounted

Four Width Reduction options can be specified:

standard width (S)

The screen comes flush on both ends

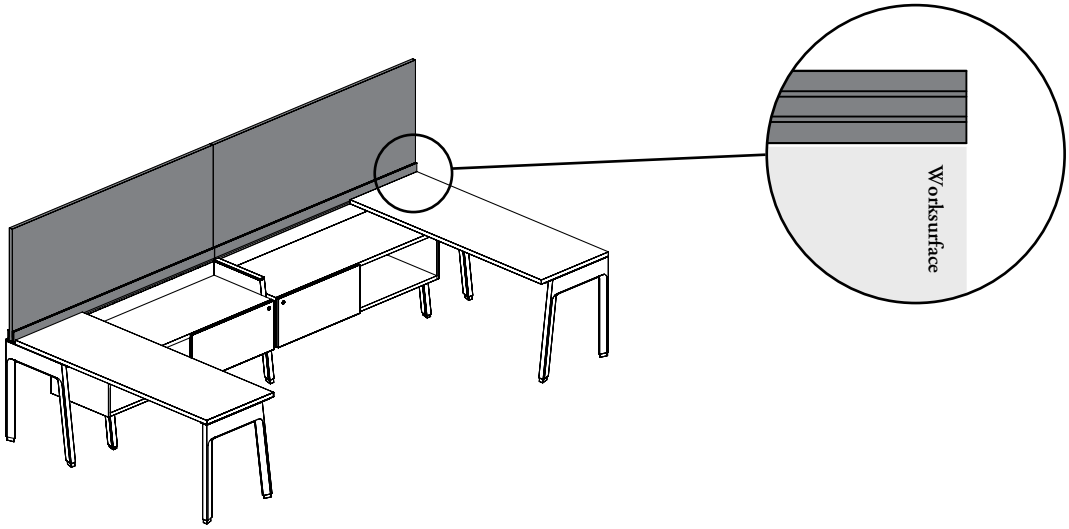

Linear Application

beam – half (A)

When perpendicular beam is crossing a Double-Sided Beam, the width of the screen has to be reduced by the beam half depth, the **Beam – Half (A)** option must be specified

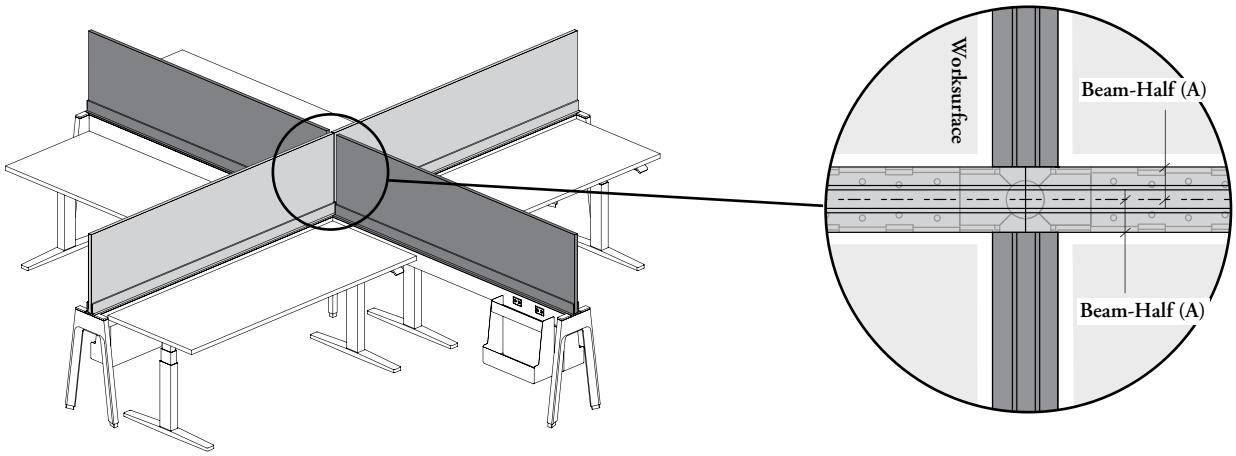

Perpendicular Application

understanding width reduction for add-on screen – beam-mounted (continued)

Four Width Reduction options can be specified (continued):

beam – full (B)

When perpendicular beam is crossing a Single-Sided Beam, the width of the screen has to be reduced by the beam full depth, the **Beam – Full (B)** option must be specified

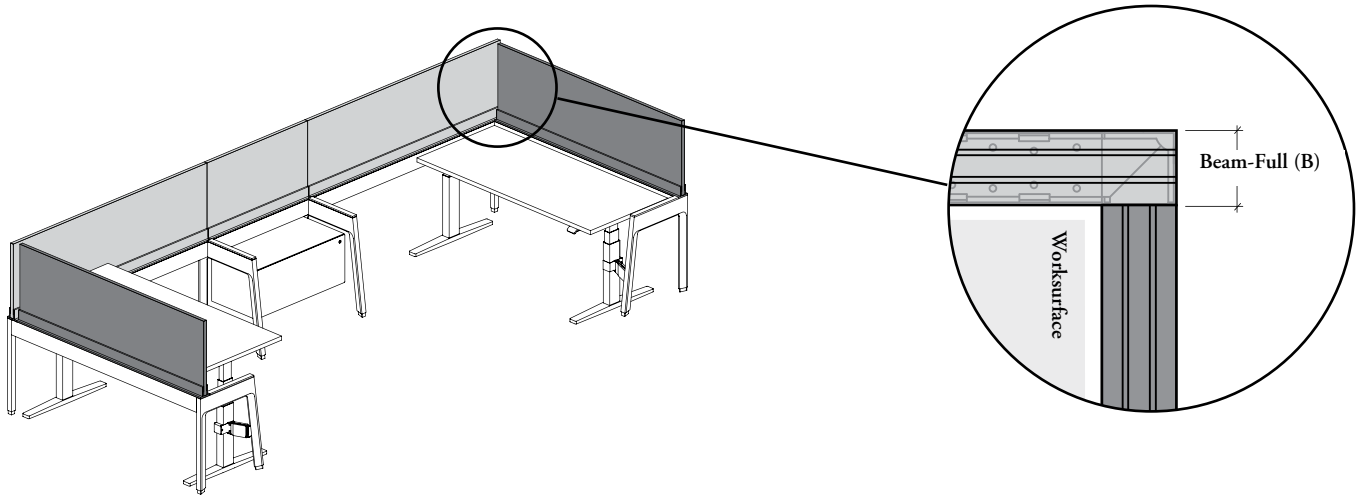

Perpendicular Application

post – 120° (Y)

When beams are crossing a 120° Strucutral Post (Two-Way Double-Sided Beam (V) or Three-Way Double-Sided Beam (Y)), the width of the screen has to be reduced by the 120° connection, the **Post – 120° (Y)** option must be specified

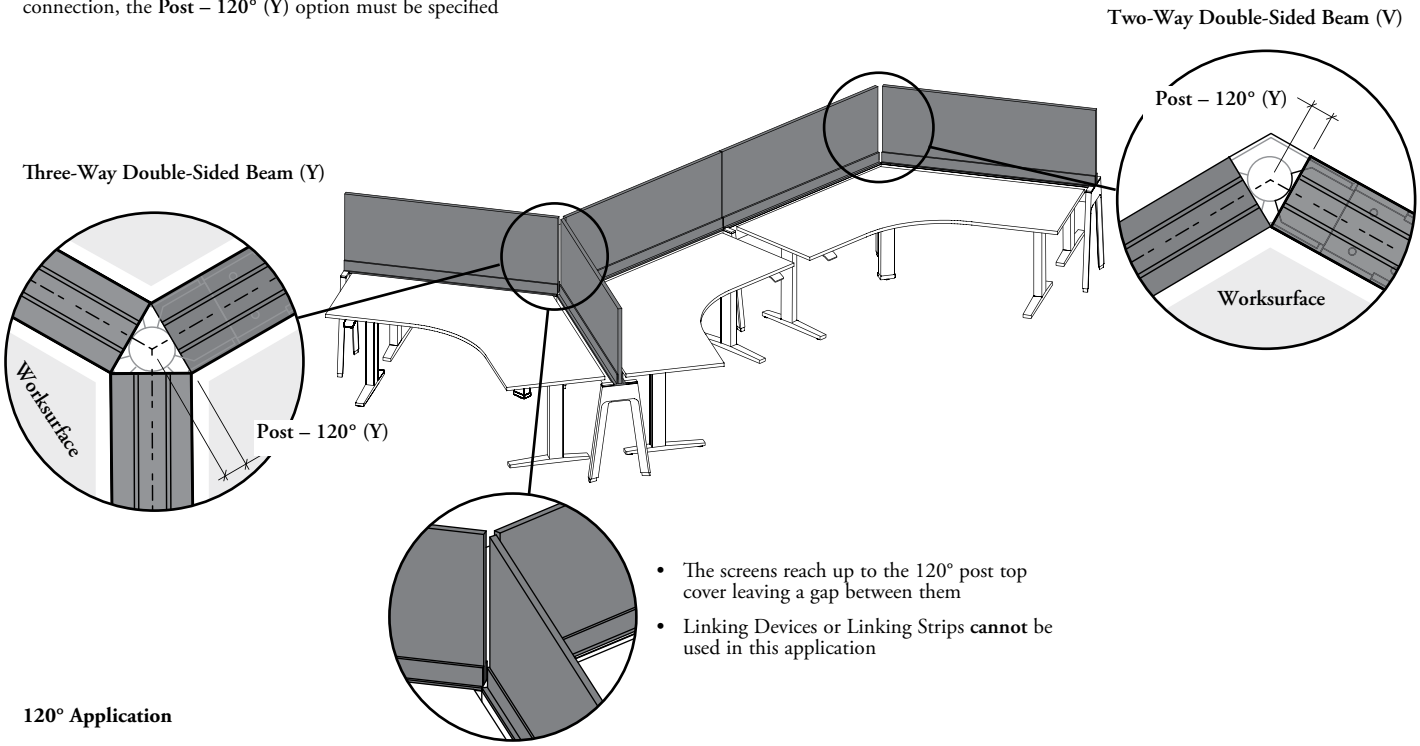

- The screens reach up to the 120° post top cover leaving a gap between them
- Linking Devices or Linking Strips **cannot** be used in this application

120° Application

planning with add-on screen – beam-mounted

Add-On Screens – Beam-Mounted are installed on Single- or Double-Sided Beams to provide central or lateral space division and privacy. The following should be considered when planning with Add-On Screens – Beam-Mounted.

- Are available in various widths to provide different levels of privacy
- For stability rules in Fence applications, refer to page 280 for more details
- Can be used contiguously only, exposed beams are allowed for linear planning only
- Can be used on-module. Off-modularity is allowed only when one end of the screen is justified with structural support or if the screen is centered over the support
- Suspended Credenzas also enables off-modularity
- A Top Cover (JNDBTC) is required to cover the exposed beam section where no screens is mounted. Refer on Desk Structures section for more details

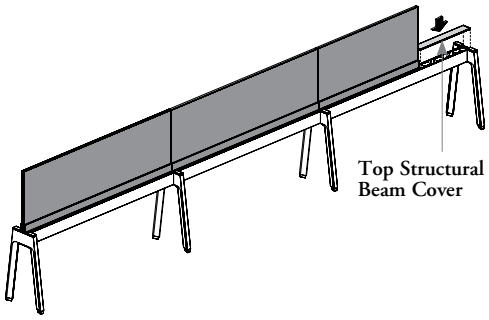

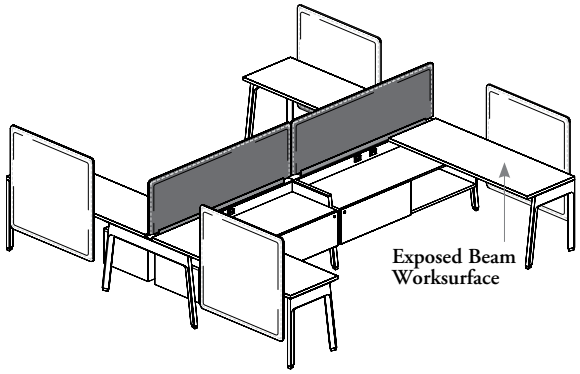

- Beam-Mounted Screen style must be specified when used in exposed beam applications
- Add-On Screens can be mounted on- (Shown) or off-module under certain conditions as shown on following illustrations

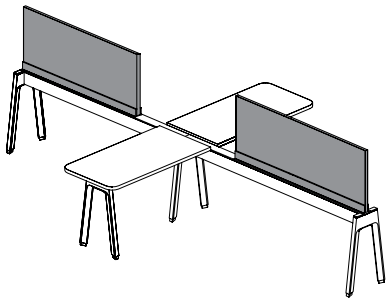

Can be positioned off-module when one end of the screen is right next to a structural support

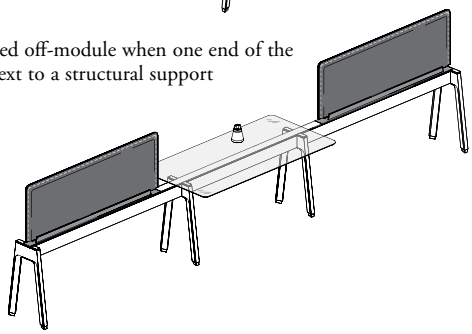

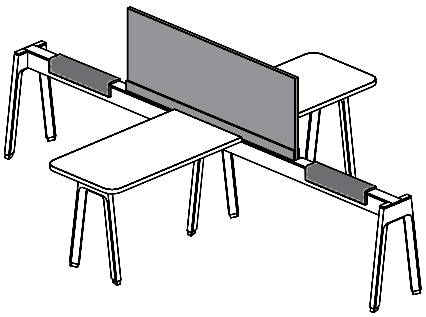

- Can be positioned off-module when centered over a structural support, except 18" wide screen
- **Cannot** be moved sideways in other positions than center

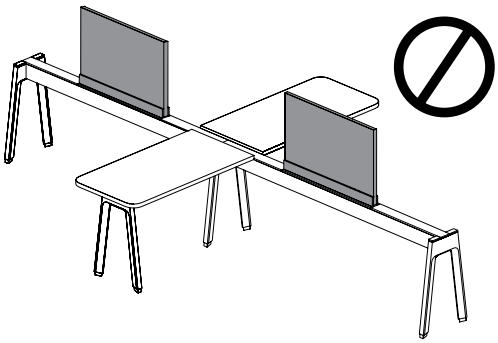

- A Suspended or Semi-Suspended Credenza must be specified when a screen is positioned off-module onto the structural beam
- The use of Credenzas prevails over other conditions

planning with add-on screen – beam-mounted (continued)

- For Felt Add-On Screen – Beam-Mounted only
- Can be specified with or without end caps

off-module application

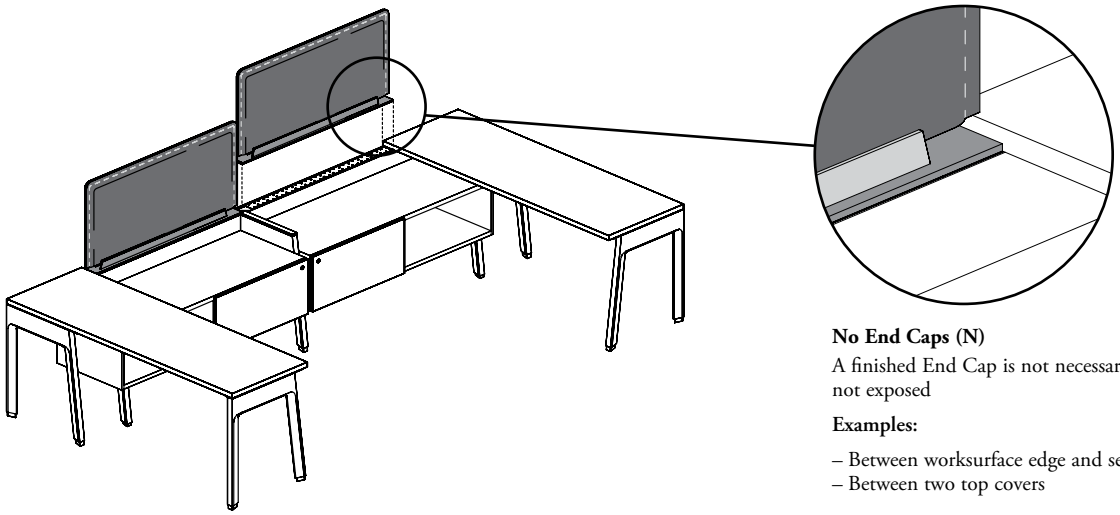

Three finished end options are available:

No End Caps (N)
A finished End Cap is not necessary when both sides are not exposed

Examples:

– Between worksurface edge and second cover (Shown)
– Between two top covers

on-module applications

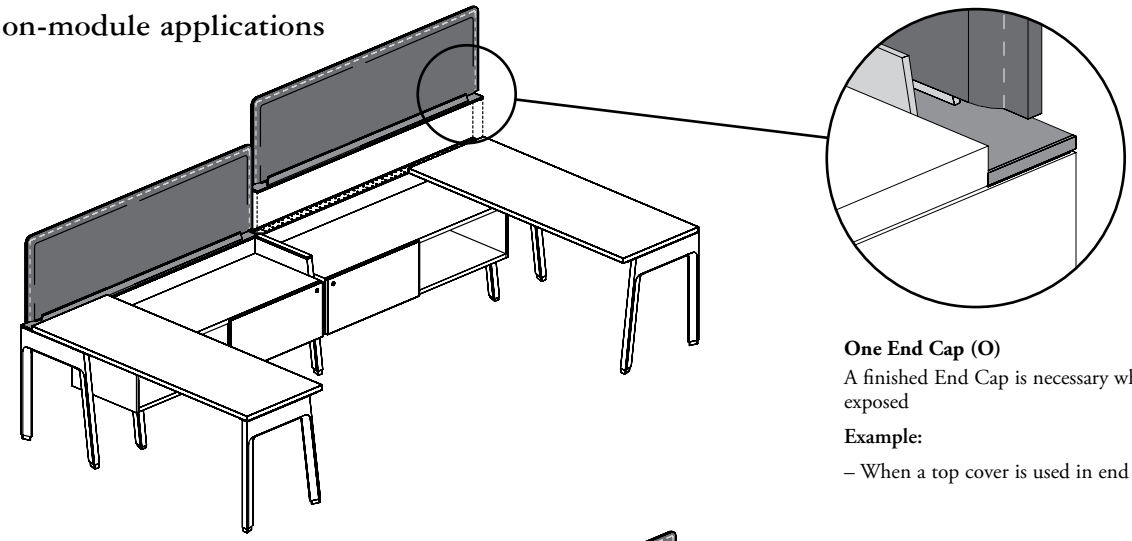

One End Cap (O)
A finished End Cap is necessary when one side is exposed

Example:

– When a top cover is used in end of runs (Shown)

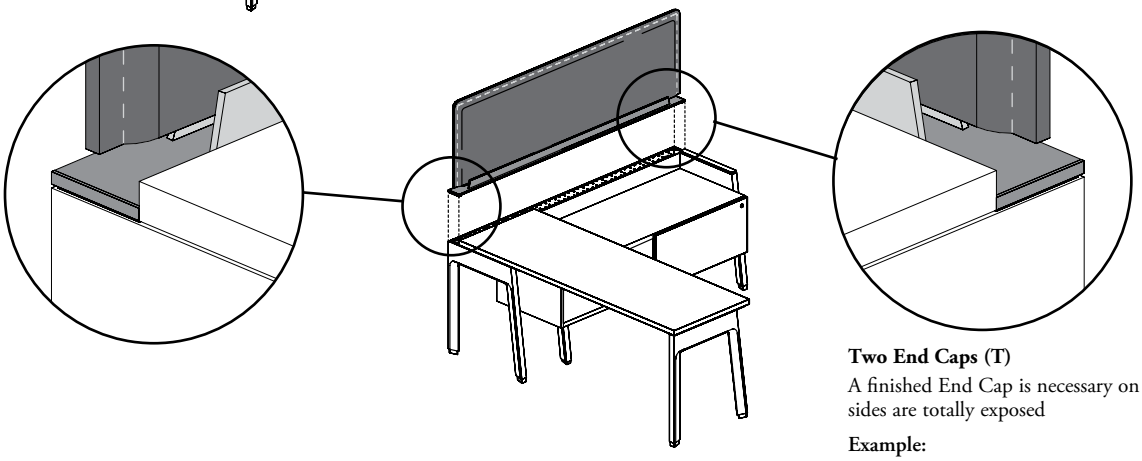

Two End Caps (T)
A finished End Cap is necessary on both ends when both sides are totally exposed

Example:

– On both ends of a workstation (Shown)

planning with add-on screen – beam-mounted (continued)

The following should considered when planning with Expansion Cityline Writable Glass Worksurface.

add-on screens – beam-mounted with writable glass worksurface – center beam-mounted

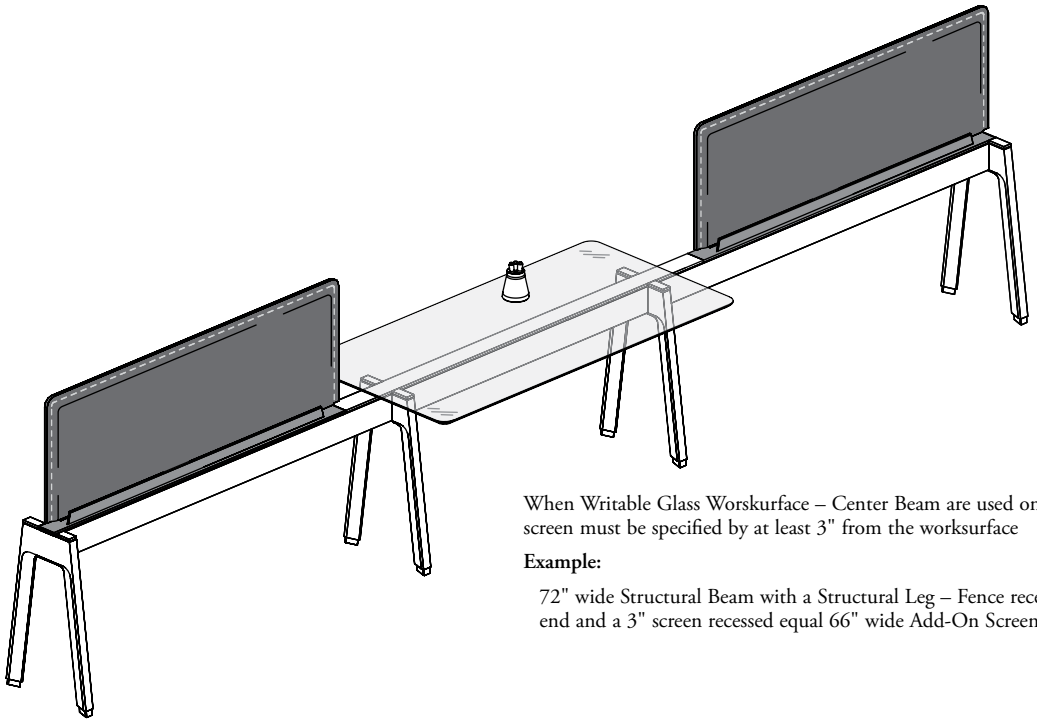

When Writable Glass Worskurface – Center Beam are used on a fence next to a screen, the screen must be specified by at least 3" from the worksurface

Example:

72" wide Structural Beam with a Structural Leg – Fence recess of 3" from the worksurface end and a 3" screen recessed equal 66" wide Add-On Screen in off-module application

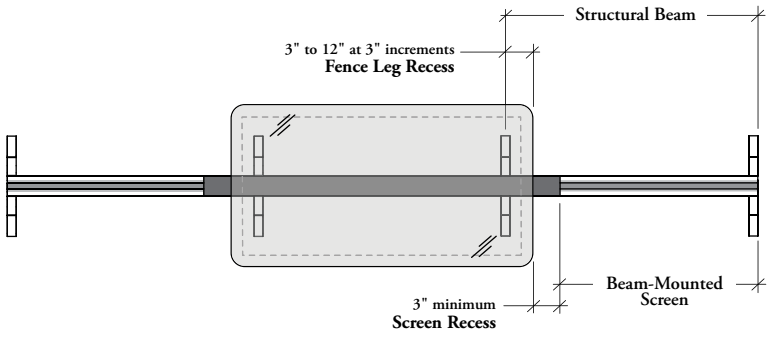

add-on screens – beam-mounted with floor or elevated screens

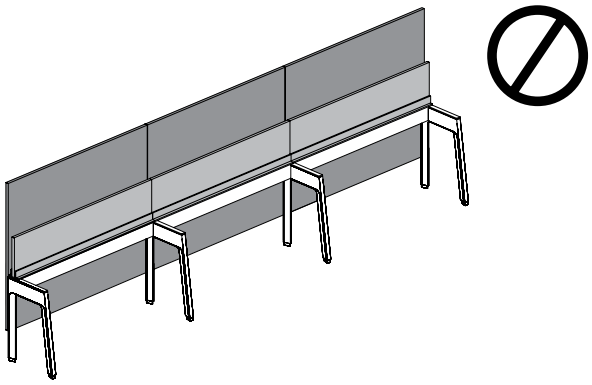

- Floor Screens and Elevated screens beam mounted **cannot** be combined on Structural Beams equipped with Add-On Screen Beam-Mounted

glass edge screen – worksurface-mounted basics

This screen can be mounted off-module on Single-Sided Rectangular Worksurfaces used as unstructured returns to provide partial privacy at 42" or 51" high.

Glass Edge Screen – Worksurface-Mounted is meant to be used casually and needs free space all around to be installed. However, the 42" and 51" datum heights will match with all other components of same datum

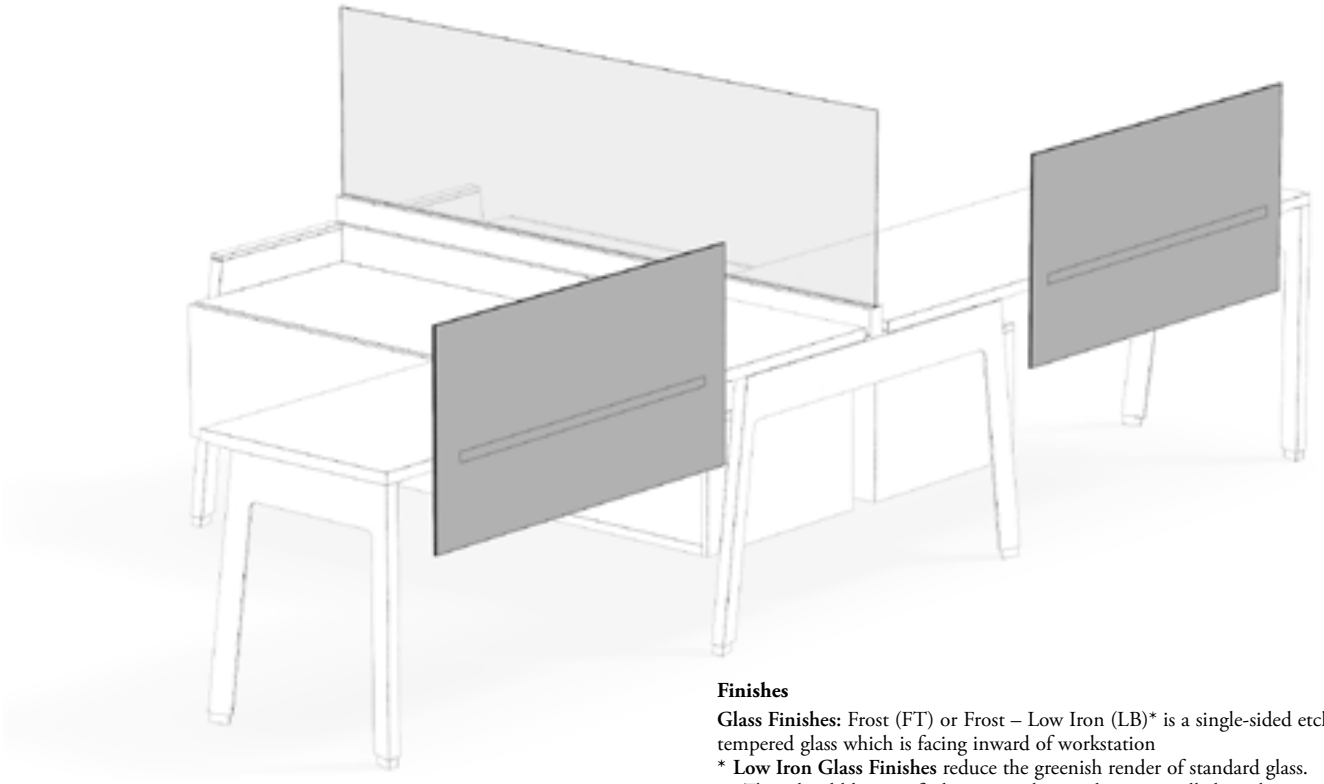

Finishes

Glass Finishes: Frost (FT) or Frost – Low Iron (LB)* is a single-sided etched tempered glass which is facing inward of workstation

* **Low Iron Glass Finishes** reduce the greenish render of standard glass. They should be specified anytime this product is installed on the same workstation than a Glass Elevated Screen

Hardware Finishes: Foundation, Mica and Accent

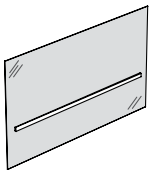

Glass Edge Screen – Worksurface-Mounted (JNSWGW)

- A territorial screen that is mounted on the back edge of a worksurface that must be free of any sub-structure
- Widths include 24" – 69" (3" increments)
- 42"or 51"high datum is allowed
- Provide partial privacy from 11" below worksurface up to 13" or 22" above worksurface
- Both Glass Finishes are 1/4" (6 mm) tempered glass

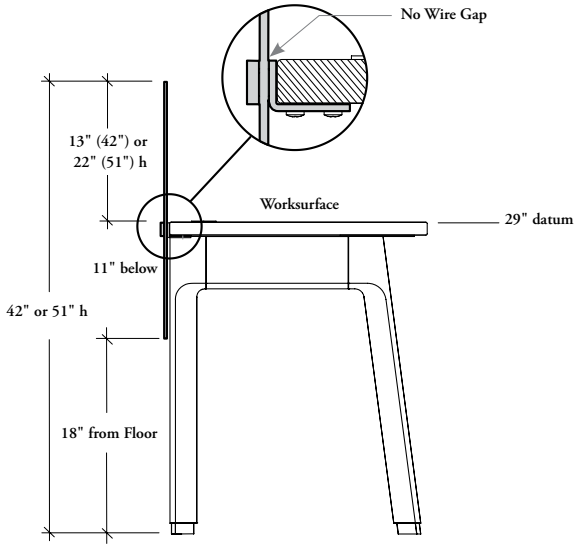

planning with glass edge – worksurface-mounted screen

The following should be considered when planning with Glass Edge Screen – Worksurface-Mounted.

- Provide partial visual privacy above and below worksurfaces
- This screen can only be attached to the back edge of unstructured Single-Sided Rectangular Worksurfaces (JNWSSN or JNWSCN), Single-Sided Rectangular Worksurfaces – Exposed Beam (JNWRSE or JNWSCE) or Height-Adjustable Run-Offs (JNHB)

restrictions

- Screens can be specified with different widths depending on the intended result
- Must be installed within open width available

Maximum width for higher privacy level

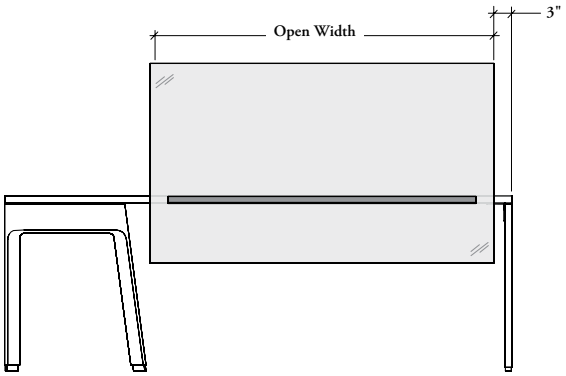

Freestanding Legs only
(Maximum width = open width minus 3")

When specifying a glass edge screen between a parallel Structural Leg and a perpendicular Freestanding Leg, the screen width must be specified 3" smaller than the open width to avoid interference with Freestanding Leg

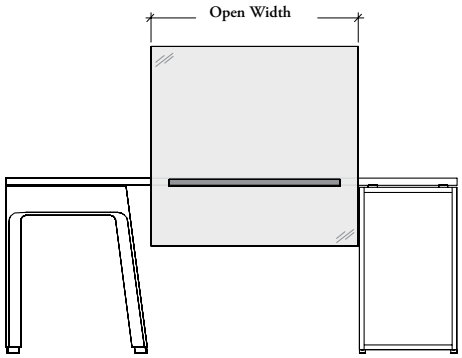

28" high Freestanding Storage only
(Maximum width = open width)

When specifying a glass edge screen between a parallel Structural Leg and a 28" high Freestanding Storage, the screen width can be equal to open width

Maximum width for higher privacy level (continued)

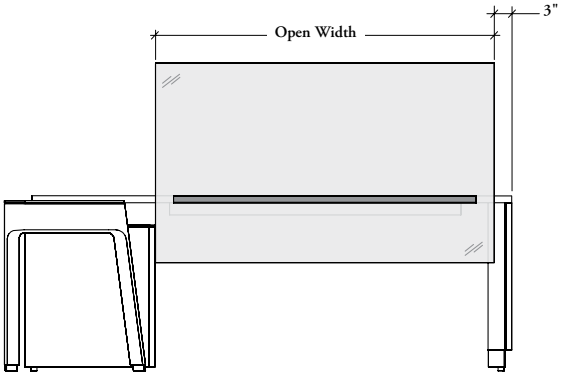

Bevel Base only
(Maximum width = open width minus 3")

When specifying a glass edge screen on Height-Adjustable Run-Offs with Bevel Base (JNHB), the screen must be specified 3" smaller than the open width between Bevel Base and Storage Cabinet for Height-Adjustable Run-Off (JNHSC)

Casual width for partial privacy

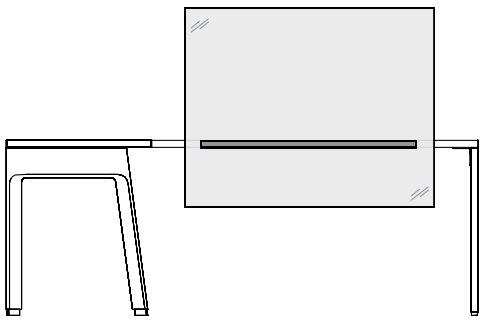

The screen can be specified shorter than of open width for casual width for partial privacy

planning with glass edge screen – worksurface-mounted (continued)

Cannot be used in combination with Suspended Modesty Panels (JNASMG or JNASML)

restrictions (continued)

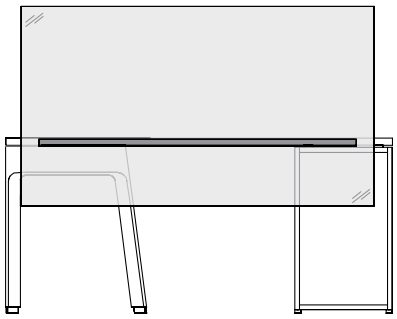

Screens **cannot** overlap legs or storage

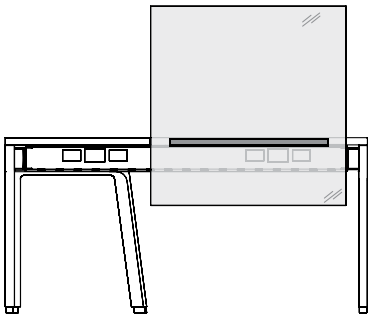

- Screens **cannot** be mounted onto a structural beam because the attachment brackets interfere with the beam
- See Elevated Screens – Beam Mounted for this applications

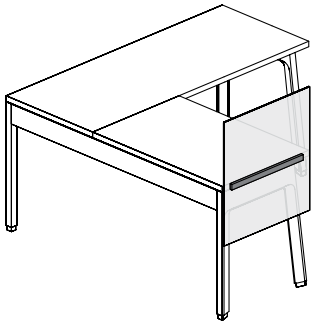

- **Cannot** be mounted onto end legs or storage
- See Elevated Screens – Leg-Mounted section for applications with legs

elevated screen – beam- or worksurface-mounted basics

The Elevated Screens create privacy and physical separation between workstations or corridor when overlaid on Structural Beams or worksurfaces.

- Elevated Screens are offered to match with Teknion standard datum heights of 42", 51" or 57", the latter not being offered with Glass Screens
- Are available in two styles:

Beam-Mounted: Mounts on- or off-module on the back side of Single-Sided Structural Beams (JNDBB) or Chicago Structural Beams (JNDCB), exposed or concealed underneath a worksurface. Can also mount on Double-Sided Structural Beams (JNDBB) or Chicago Structural Beams (JNDCB) used in Standard Fence applications but requires special attention to width and height specification

Worksurface-Mounted: Mounts on- or off-module on the back edge of Single-Sided Rectangular Worksurfaces and Height-Adjustable Run-Offs. Off-modularity may be limited with certain Mounting Styles

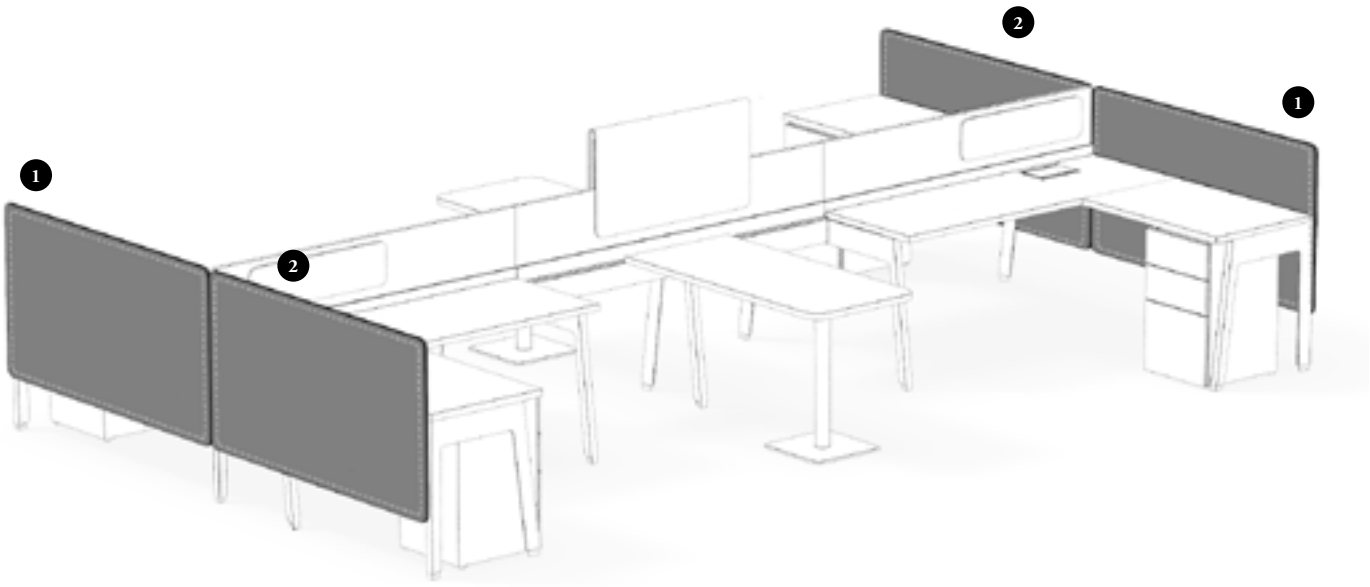

Finishes

Frame (If applicable) & Hardware Finishes: Foundation, Mica, Accent and Ebony (52)*
* When a Felt Elevated Screen is specified, only the Ebony (52) finish is available for Hardware Finish
Solid Finishes: Source Laminate
Glass Finishes: Clear – Low Iron (LA)** or Frost – Low Iron (LB)**
** **Low Iron Glass Finishes** reduce the greenish render of standard glass. Any other Glass Screen installed on the same workstation should also be specified in these finishes
Glass Finish – Modesty Height: Back-Painted
Fabric Finishes: Teknion Standard Panel Fabrics, specified separately for inner and outer sides
Felt Finishes: Loft colors. Two-sided finished products have the same finish on both sides
Stitches Finishes: Carbon Coordinate (C), Shale Coordinate (E), Carrara Coordinate (G) or Umber Coordinate (M)

elevated screen – beam- or worksurface-mounted basics (continued)

- Following products provide fabric or felt space division, visual privacy and noise reduction control
- Are tackable on both sides

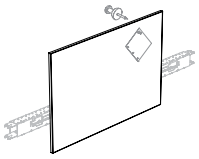

Beam-Mounted (JNSEFB)

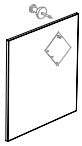

Worksurface-Mounted (JNSEFW)

Fabric Elevated Screen – Beam-Mounted (JNSEFB) or Fabric Elevated Screen – Worksurface-Mounted (JNSEFW)

- Inner and outer finishes are specified separately
- 42", 51" or 57" high datum is allowed

Beam-Mounted only

- Widths include 24" – 84" (6" increments)

Worksurface-Mounted only

- Widths include 24" – 84" (3" increments)

1

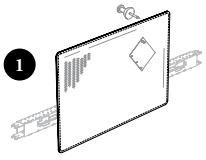

Beam-Mounted (JNSEEB)

2

Worksurface-Mounted (JNSEEW)

Felt Elevated Screen – Beam-Mounted (JNSEEB) or Felt Elevated Screen – Worksurface-Mounted (JNSEEW)

- Felt Finish is the same on both sides
- 42", 51" or 57" high datum is allowed
- Come with Radius Corner Details (R)

Beam-Mounted only

- Widths include 24" – 84" (6" increments)

Worksurface-Mounted only

- Widths include 24" – 84" (3" increments)

elevated screen – beam- or worksurface-mounted basics (continued)

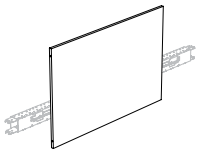

Beam-Mounted (JNSESB)

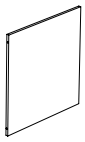

Worksurface-Mounted (JNSESW)

Solid Elevated Screen – Beam-Mounted (JNSESB or Solid Elevated Screen – Worksurface-Mounted (JNSESW)

- Available 1" thick and two-sided finished
- 42", 51" or 57" high datum are available
- Comes with Standard Corner Details (S)
- Screen ends can be specified With (W) or Without (N) Alignment Holes to allow installation of Linking Devices

Beam-Mounted only

- Widths include 24" – 84" (6" increments)

Worksurface-Mounted only

- Widths include 24" – 84" (3" increments)

grain direction

- Always runs horizontal
- The grain direction on Laminate Solid Screens is **not** directional. It may appear in different directions on side-by-side screens

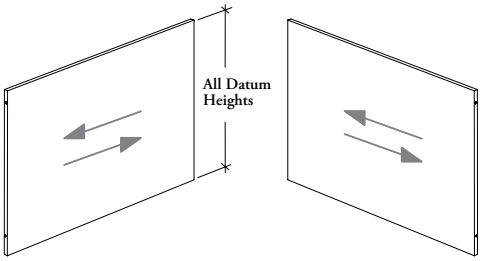

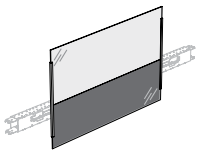

Beam-Mounted (JNSEGB)

Worksurface-Mounted (JNSEGW)

Glass Elevated Screen – Beam-Mounted (JNSEGB) or Glass Elevated Screen – Worksurface-Mounted (JNSEGW)

- Available with a 1/4" (6 mm) thick tempered Low Iron glass
- Low Iron Glass Finishes reduce the greenish render of standard glass. Any other Glass Screen installed on the same workstation should also be specified in these finishes
- Lower portion is back-painted in order to hide structures and brackets
- 42" or 51" high datum are available
- Come with Standard Corner Details (S)
- Linking Strip for Glass Screen **cannot** be installed on this product

Beam-Mounted only

- Widths include 24" – 84" (6" increments)

Worksurface-Mounted only

- Widths include 24" – 84" (3" increments)

elevated screen – beam- or worksurface-mounted basics (continued)

datum heights & alignments

- Elevated Screens match Teknion standard datum heights of 42", 51" and 57" when mounted on worksurfaces or Structural Beams or legs
- Solid (if specified) and Fabric Elevated Screens come with alignment devices. Screens of the same height and material can be linked together
- Unlike Add-On Screens, Elevated Screens can be linked together in 90° corners. This requires the appropriate specification of the Width Extension for Corner Application. Refer to page 472 for details
- Mix of different screen materials is allowed but **cannot** be linked. Width Extension for Corner Application should be specified Standard Width in these applications

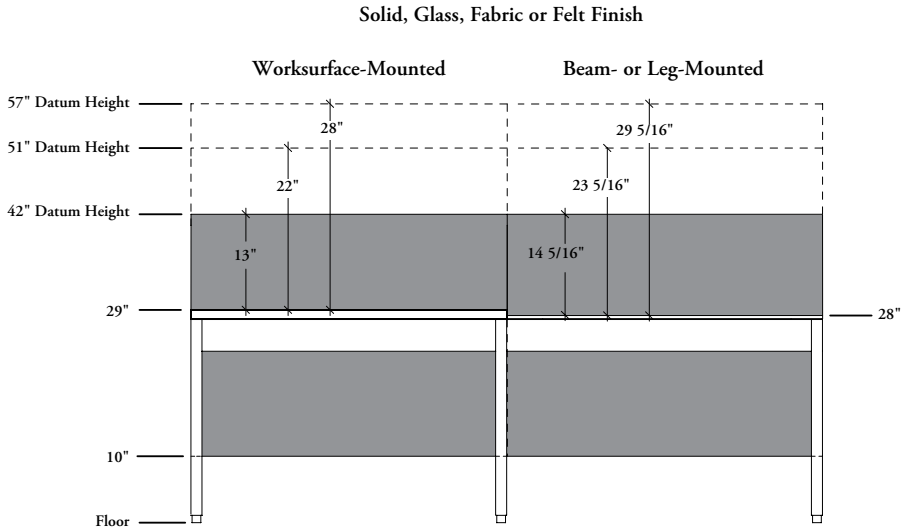

- The Alignment Holes option must be specified and is recommended on Solid Screens to allow the installation of linking devices. Caps are supplied for unused holes
- Fabric Screens always come with linking devices which can be used or not at installation
- Glass Screens have strong mounting extrusions at both ends which are easier to align with each other and prevents glass from warping. Linking Strip for Glass Screen **cannot** be used on Elevated Screens
- Felt Screens have a casual look and feel and **cannot** be connected for alignment. However, they can be placed side-by-side, in 90° corners or in combination with other screen materials
- Width Extension for Corner Application is **not** available with Felt. Gaps may occur in 90° corners. Refer to page 472 for details

base height

- 10" above floor, will block power access on wall. Add-On Screens Beam- or Worksurface-Mounted can be specified to allow access to wall outlets
- Elevated screens do **not** allow routing wires between screen and worksurface edge nor through a Pass-Through Ring. Access Door, Grommet or Cut-Out option is available on worksurfaces for that purpose
- The bottom of the Elevated Screens aligns with the following products:

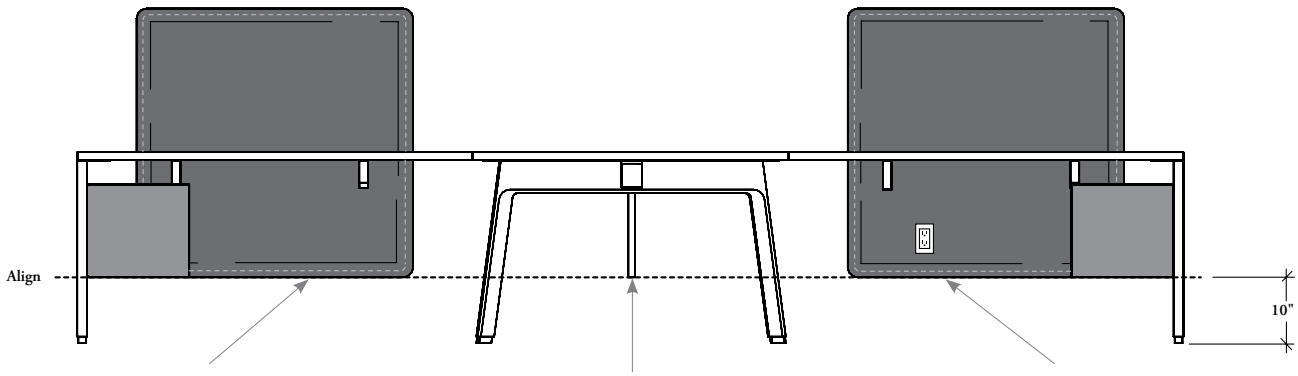

understanding beam- or worksurface-mounting style for elevated screens

Understanding the different beam- or worksurface-mounting styles is key in specifying appropriate Elevated Screens Beam- or Worksurface-Mounted.

beam-mounted configuration

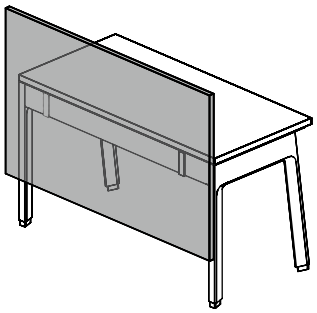

- Never exceeds a beam
- Requires a beam (JNDBB or JNDCB) for installation, hardware included
- Mounts on- or off-module on the back side of Single-Sided Beams, exposed or concealed underneath a worksurface (Shown)
- Can also mount on Double-Sided Beams used in Standard Height Fence applications but requires special attention to width and height specification
- Off-modularity is allowed under certain conditions. Refer to page 478 for details
- **Cannot** mount on Structural Beams when used in Low Height Fence application

worksurface-mounted configuration

- Requires an unstructured worksurface for installation and can exceed over next worksurface support when specified
- Three mounting style are available with Worksurface-Mounted Elevated Screens:

– Support Connection on Left (L)
– Support Connection on Right (R)
– Worksurface Only (W)

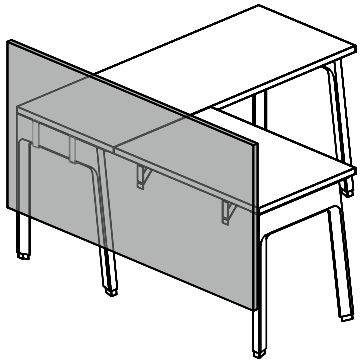

Support Connection on Left (L) or Right (R) (Shown) Mounting Style

- Support Connection on Left or Right (Shown) configuration can only be used with:
  – Single-Sided Structural Leg – End Position (JNDLS) (Shown)
  – Structural Post with Front Leg – End Position (JNDPF)
  – Double-Sided Structural Leg (JNDLD)
  – Double-Sided Freestanding Leg (JNALD) with worksurface
- Support Connection handedness is determined by the side of the support when looking at the inner side of the screen
- Single-Sided supports will be fully covered by screen, Double-Sided supports will be half-covered
- Leg (if specified) and worksurface mounting hardware is included

understanding beam- or worksurface-mounting style for elevated screens (continued)

worksurface-mounted configuration (continued)

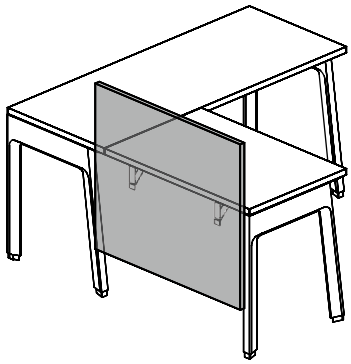

Worksurface Only (W) Mounting Style

- Never exceeds worksurface dimension
- Worksurface Only configuration (W) can be specified for installation on unstructured worksurfaces and Run-Off.
- Worksurface mounting hardware is included
- It is strongly recommended to add a Worksurface Reinforcement Channel (JNWRC) underneath worksurfaces on which a Worksurface Only Elevated Screen is mounted. This adds screen rigidity

The following supports are **not** applicable for worksurface-mounted with support connection configurations:

– Structural Legs – Fence/Beam-Mounted Cabinet/Peninsula (JNDLF, JNDLL, JNDLP)
– Freestanding Legs – Lateral Cabinet/Peninsula (JNALL, JNALP)
– Peninsula Monopod Base – Round (JNAPP)
– Bevel Base on Run-Off (JNHB)
– All 28" high Freestanding Storage

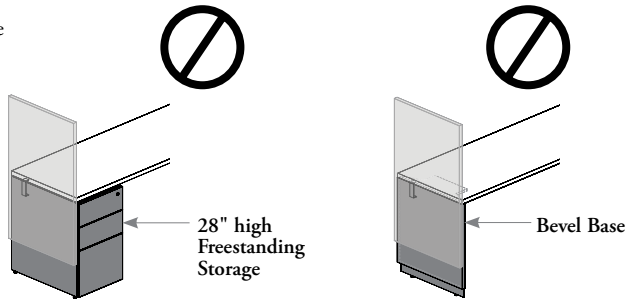

understanding width extension for corner application – elevated screens – beam- or worksurface-mounted

The following should considered when planning with Elevated Screens – Beam- or Worksurface-Mounted.

- Width extension for each material is related to its thickness and differ from one another
- Appropriate specification of this option will allow closing 90° corners made with screens of same material
- Screens of different materials can be installed on same workstation but **cannot** be linked. Width Extension for Corner Application should be specified Standard Width in these applications and corners **cannot** be closed
- Width extension are **not** offered on Felt Screen, a Felt Corner Elevated Screen is offered and may be used in some applications. Refer to page 479 for details
- The screen dimensions are **not** all available with Width Extension for Corner Application option; see individual product page for details

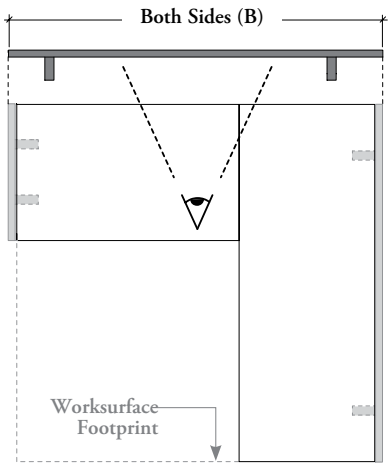

Both Sides (S)

- Both ends of screen are extended to cover the thickness of perpendicular screens of same material
- Can be specified with:
  - Solid, Glass or Fabric Elevated Screens – Beam-Mounted
  - Solid, Glass or Fabric Elevated Screens – Worksurface-Mounted

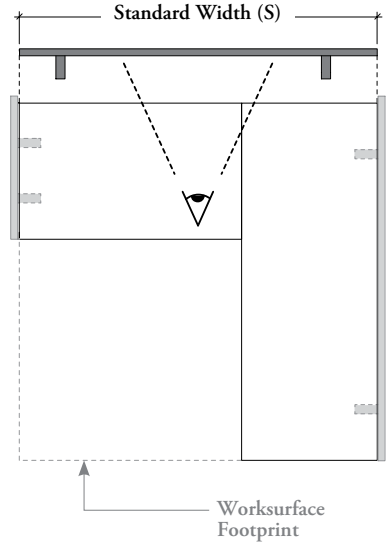

Standard Width (S)

- Both ends of screen come flush with what it is mounted to
- Can be specified with:
  - Solid, Glass, Fabric or Felt Elevated Screen – Beam-Mounted
  - Solid, Glass, Fabric or Felt Elevated Screen – Worksurface-Mounted

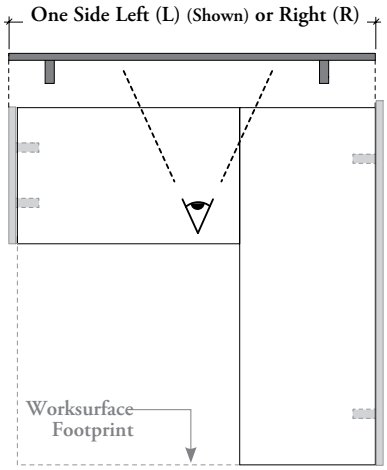

One Side – Left (L) or Right (R)

- Either left or right end of screen is extended to cover the thickness of a perpendicular screen of same material
- Handedness is determined by the extended end position when looking at the inner side of the screen
- Can be specified with:
  - Solid, Glass or Fabric Elevated Screens – Beam-Mounted
  - Solid, Glass or Fabric Elevated Screens – Worksurface-Mounted

90° Corner Application with Elevated Screen – Beam- or Worksurface-Mounted and One Side Extended (O) with Elevated Screen – Leg-Mounted

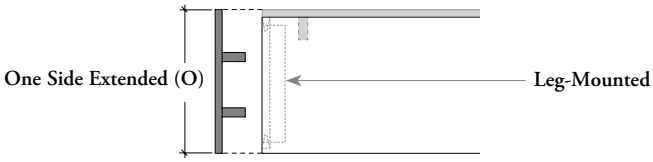

- Width extension can only be specified on the back end of Single-Sided Legs. As Legs are already handed, there is no need to specify an orientation
- Can be specified with Solid, Glass or Fabric Elevated Screens – Leg-Mounted only, refer on Leg-Mounted Screens section for more details

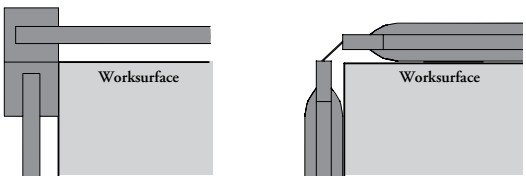

90° corners with glass screens are closed at mounting extrusion height only

90° corners with felt screens **cannot** be closed, see Felt Corner Elevated Screen on page 479 for an alternative

understanding elevated screen – beam- or worksurface-mounting style specification

Understanding Beam- or Worksurface-Mounting Styles is key in specifying the appropriate Elevated Screen – Beam- or Worksurface-Mounted.

- If a beam is involved in the mounting of an Elevated Screen, the Beam-Mounted Style must be specified. Refer to next page for illustrations
- Without beam mounting styles are easily understood by answering the following question: Is there only a leg involved? If yes, the Leg-Mounted Style must be specified; if no, one of the three Worksurface-Mounted Styles must be specified. See illustrations below

worksurface-mounted screens

Worksurface-Mounted – Support Connection on Right

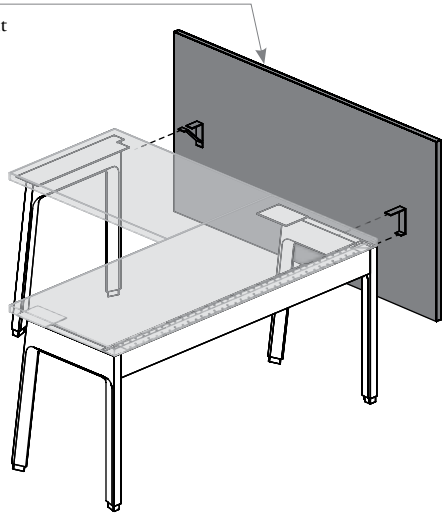

When mounted in combination with a worksurface and a leg, an Elevated Screen – Worksurface-Mounted must be specified

Worksurface-Mounted – Support Connection on Right

Leg-Mounted – Right

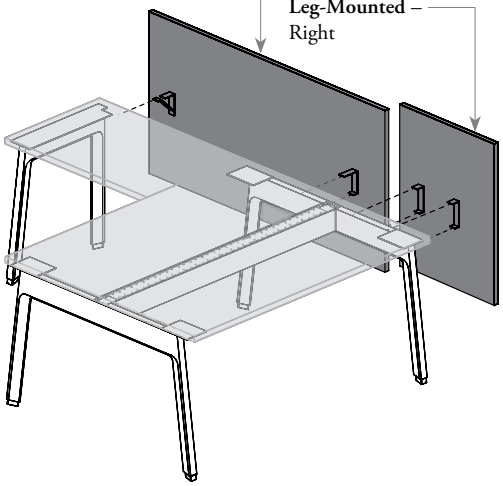

Left screen is mounted in combination with a worksurface and a leg, an Elevated Screen – Worksurface-Mounted must be specified; right screen is mounted to a leg only, an Elevated Screen – Leg-Mounted must be specified. For more details on Elevated Screen Leg-Mounting style, refer to Leg-Mounted Screens section.

Worksurface-Mounted – Support Connection on Right

Worksurface-Mounted – Support Connection on Left

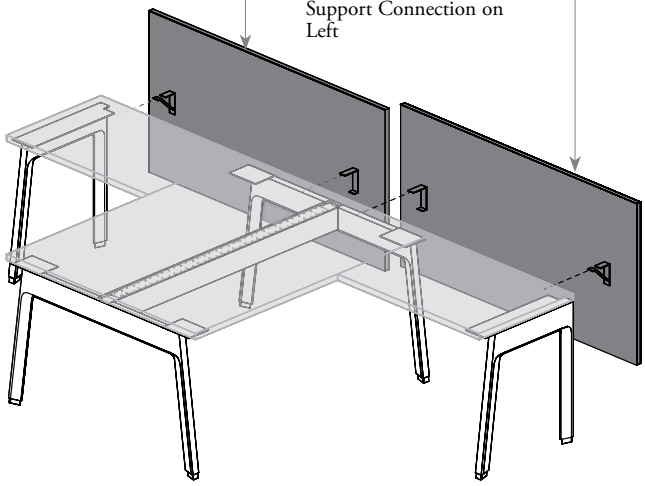

When two panels are mounted in combination with a worksurface and a leg, two Elevated Screens – Worksurface-Mounted must be specified

understanding elevated screen – beam- or worksurface-mounting style specification (continued)

Elevated Screens **cannot** span more than one structural beam

beam-mounted screens

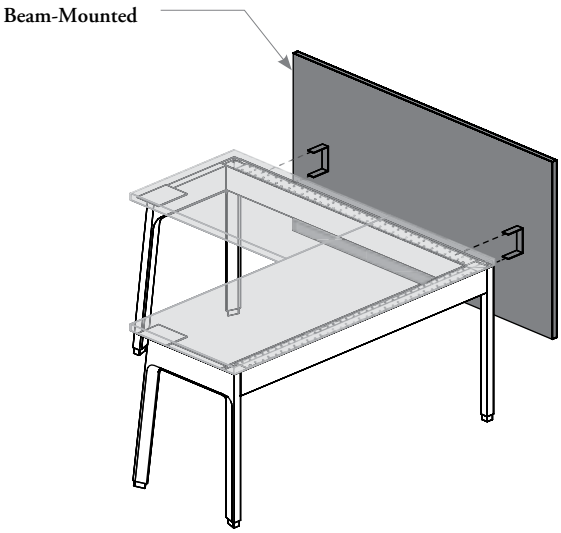

When mounted to a structural beam, an Elevated Screen – Beam-Mounted must be specified

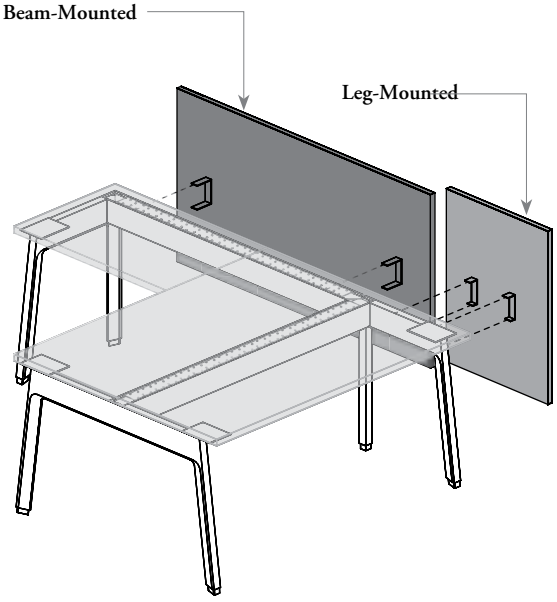

Left screen is mounted to a structural beam, an Elevated Screen – Beam-Mounted must be specified; right screen is mounted to a leg only, an Elevated Screen – Leg-Mounted must also be specified. For more details on Elevated Screen Leg-Mounting style, refer to Leg-Mounted Screens section

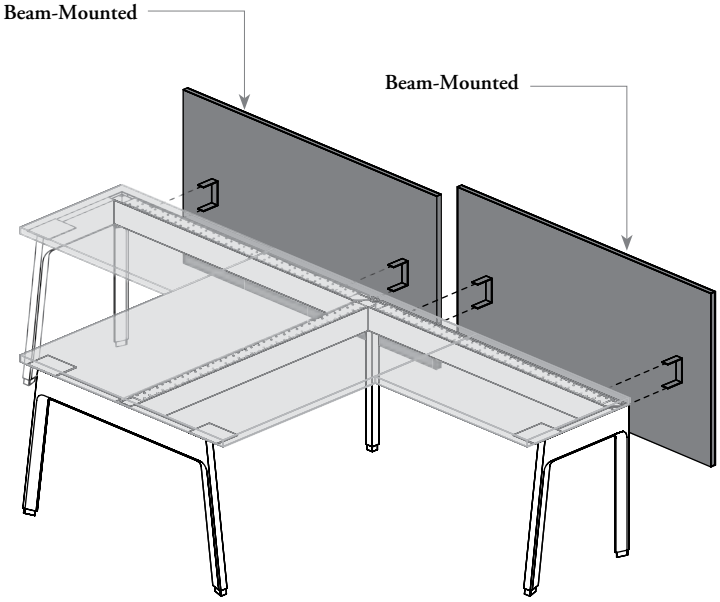

When two screens are mounted on two structural beams, two Elevated Screens – Beam-Mounted must be specified

planning with elevated screens – beam- or worksurface-mounted

worksurface-mounted – on-module applications

Worksurface-Mounted – Support Connection Application

A Worksurface-Mounted screen **cannot** span across the whole depth of a Double-Sided Leg. It must reach the rear end of a Single-Sided Leg or the middle of a Double-Sided Leg. In the case shown above, two screens are needed: best planning is with a Worksurface-Mounted – Support Connection on Right screen that covers the left workstation footprint, which is used in combination with a Leg-Mounted – Right screen that covers the footprint on right. The alternative would be to use a Worksurface-Mounted – Worksurface Only to cover the return on the workstation on left, which could be used in combination with a Leg-Mounted – Double-Sided Leg Overlay that covers the Double-Sided Leg

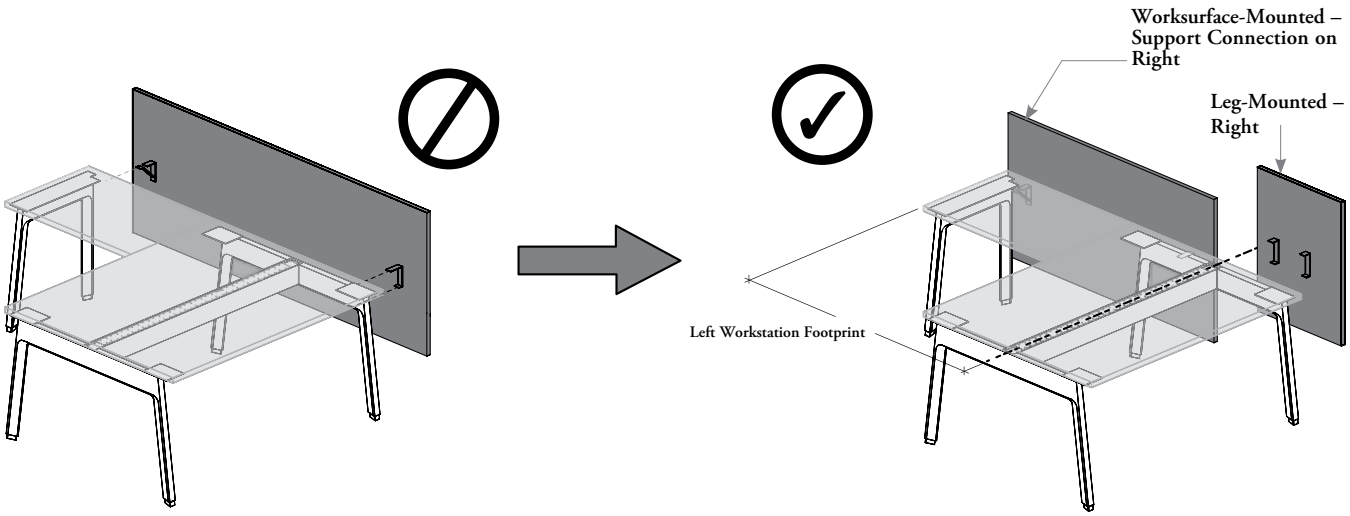

Worksurface-Mounted with 12" or 15" wide Freestanding Storage Application

- From 42" wide and up, Worksurface-Mounted Elevated Screens can span over a 12" or 15" wide pedestal or tower
- When next to a tower, an Elevated Screen can be specified at the same height or lower than the tower
- Glass Elevated Screen **cannot** be used in this application, mounting bracket **cannot** be shifted beside storage on glass

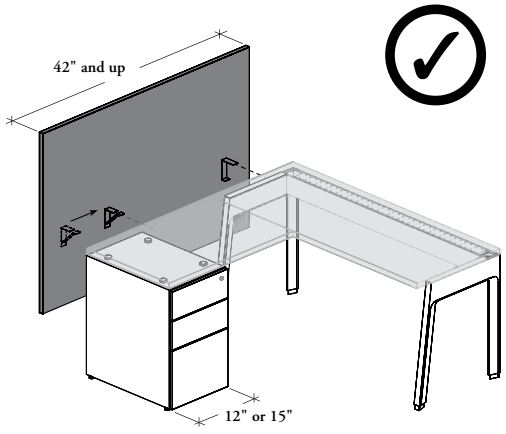

worksurface-mounted – off-module applications

Worksurface-Mounted Application

Off-modularity is allowed for Worksurface-Mounted – Support Connection style if the screen is justified with the rear end of a single-sided leg or with the middle of a double-sided leg

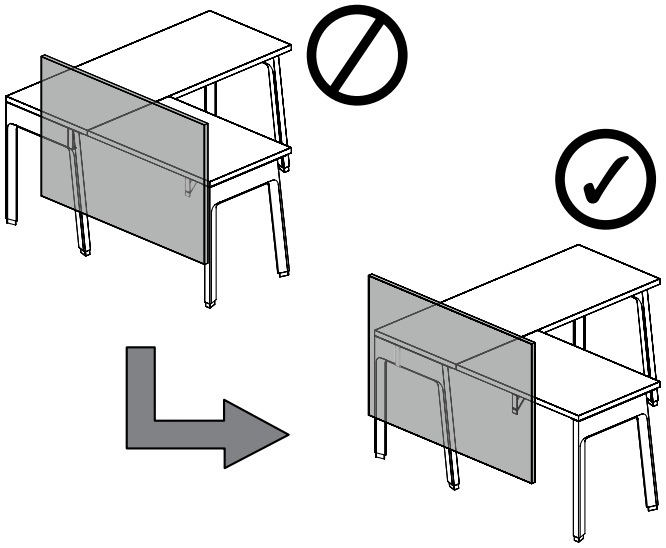

planning with elevated screens – beam- or worksurface-mounted (continued)

beam-mounted – on-module applications

Beam-Mounted Application with Double-Sided Worksurface and Two Returns

- Beam-Mounted Elevated Screens **cannot** span across two beams. Structural Posts and Legs are the beam screen boundaries
- Each workstation footprint should have its own screen. The junction of two screens in this application should be centered with Structural Post

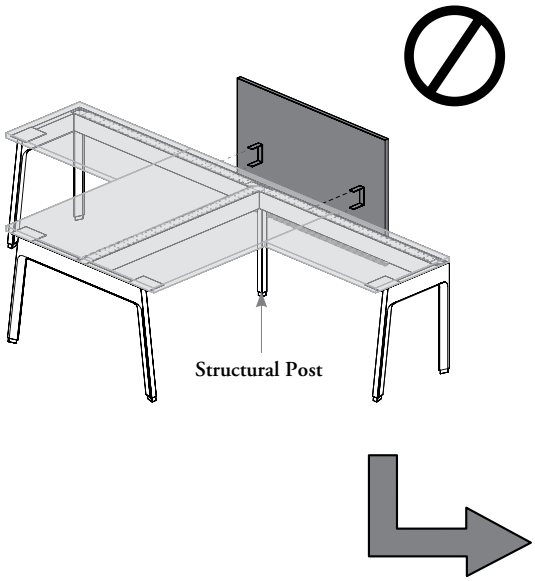

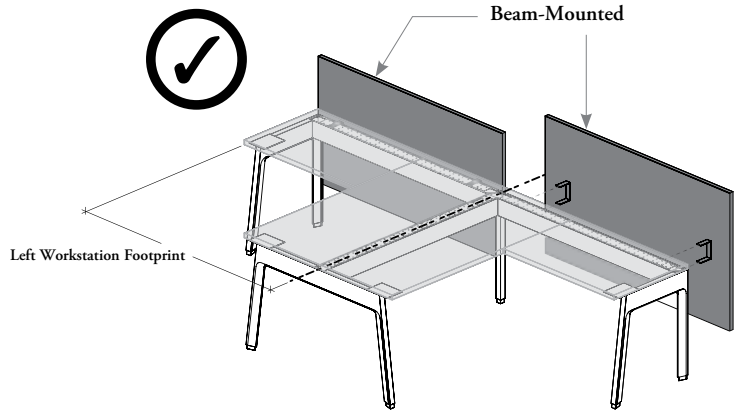

Beam- and Leg-Mounted Application

- Beam-Mounted Elevated Screens **cannot** span across Structural Post with Front Legs
- Each workstation footprint should have its own screen. The junction of two screens in this application should be centered with Structural Post. Screen on left should be Beam-Mounted, screen on right should be Leg-Mounted – Right

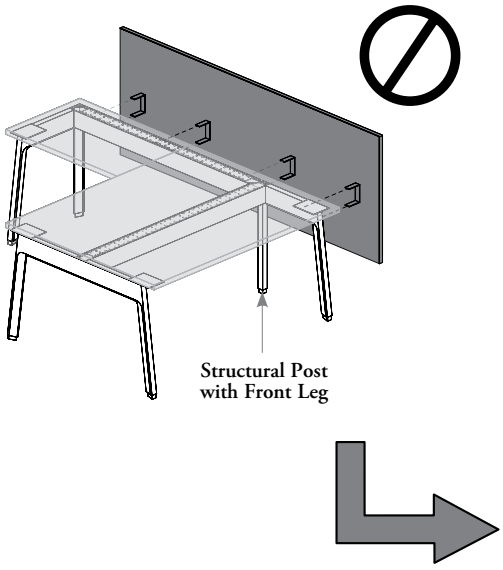

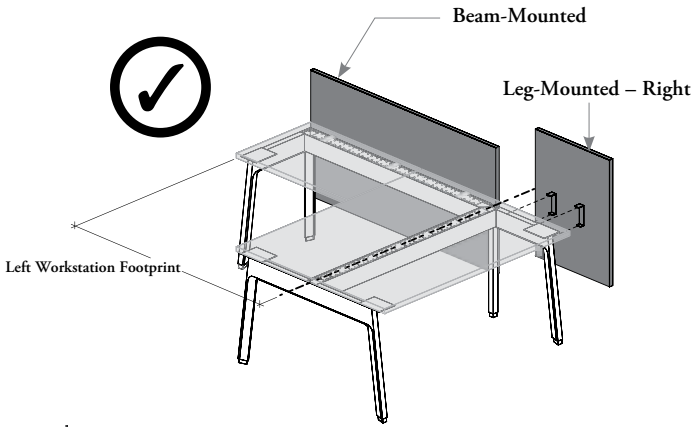

planning with elevated screens – beam- or worksurface-mounted (continued)

beam-mounted – on-module applications (continued)

Beam-Mounted Application with Casual Workstation

When Beam-Mounted Elevated Screens are specified on a structural beam mounted on Structural Legs – Fence, the screen width should be specified 6" narrower than the beam it is mounted to. The screen must be centered between legs. No other screen widths allowed

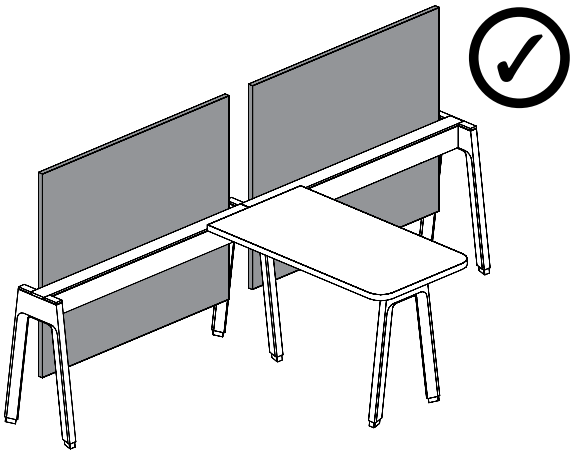

Beam-Mounted Application with Beam Tower

- From 54" wide and up, Beam-Mounted Elevated Screens can span over a 12" or 15" wide tower
- When next to a tower, an Elevated Screen can be specified at the same height or lower than the tower
- Glass Elevated Screen **cannot** be used in this application, mounting bracket **cannot** be shifted beside storage on glass

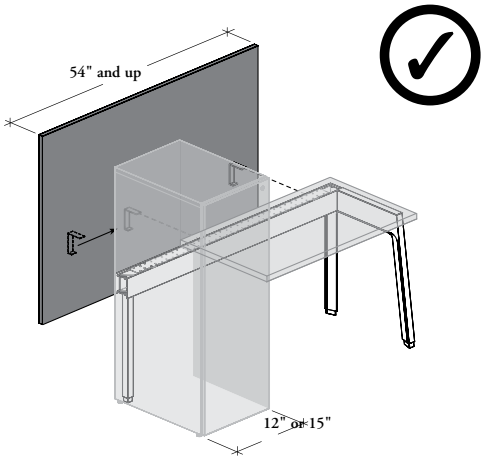

beam-mounted – on- and off-module stability

Beam-Mounted Application with Bench Workstation

The table below shows the combinations of screens heights and worksurface depth required to stabilize a single-sided bench workstation. The restricted combinations can be stabilized with the use of Suspended Credenzas or Returns

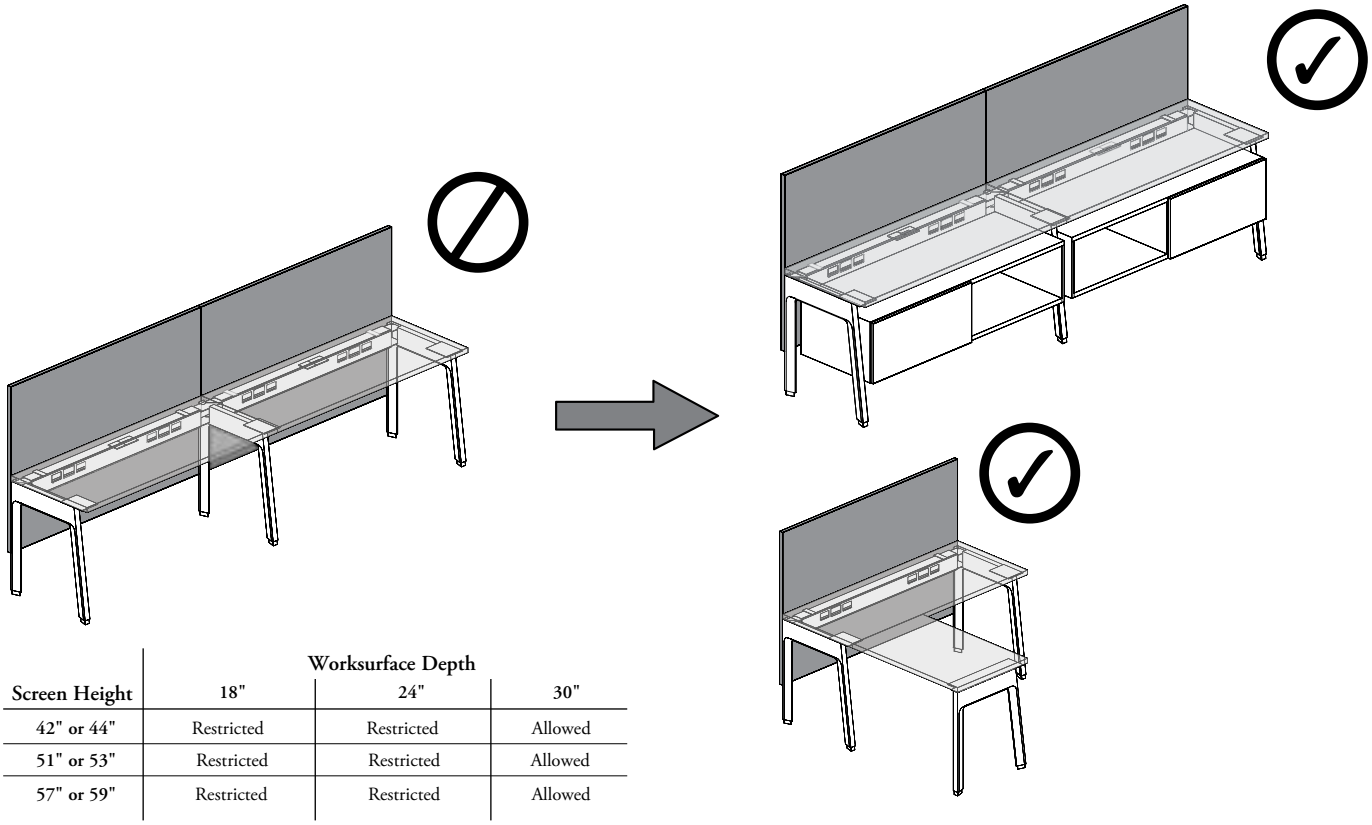

Screen Height	Worksurface Depth 18"	24"	30"
42" or 44"	Restricted	Restricted	Allowed
51" or 53"	Restricted	Restricted	Allowed
57" or 59"	Restricted	Restricted	Allowed

planning with elevated screen – beam- or worksurface-mounted (continued)

beam-mounted – off-module applications

Beam-Mounted with Off-Module Application

- Beam-Mounted Elevated Screens can be specified off-module if at least one of its ends is justified with a Structural Post or Leg
- The use of a Semi-Suspended or Suspended Credenza is mandatory when Elevated Screens must be installed off-module on both sides. This is for panel rigidity
- As shown on previous page in a Casual Workstation, an Elevated Screen specified 6" narrower than beam is not considered being specified off-module, therefore, it is allowed

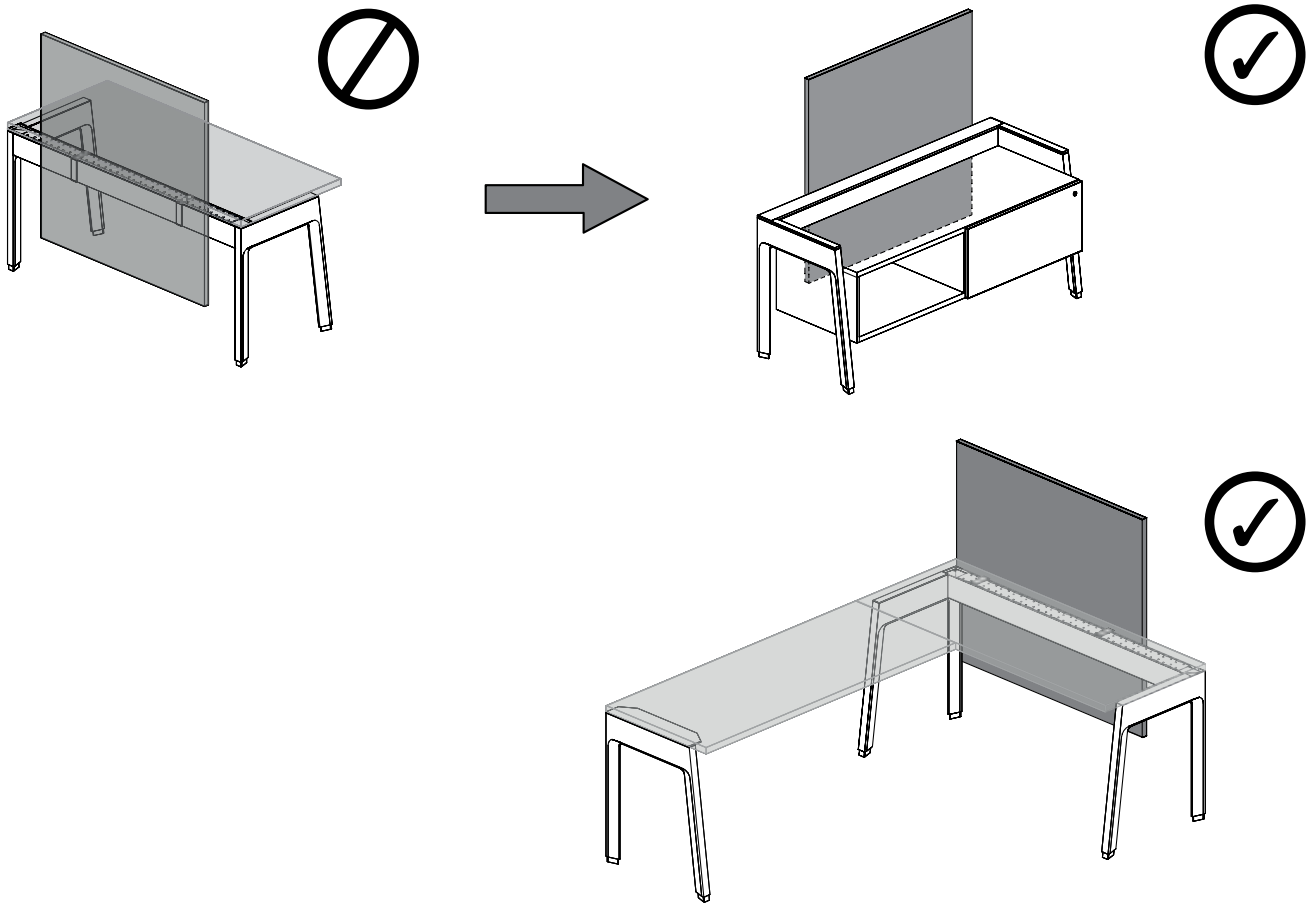

felt corner elevated screen basics

The Felt Corner Elevated Screen offers noise reduction control and provides physical separation with access pathway when mounted on workstation ends.

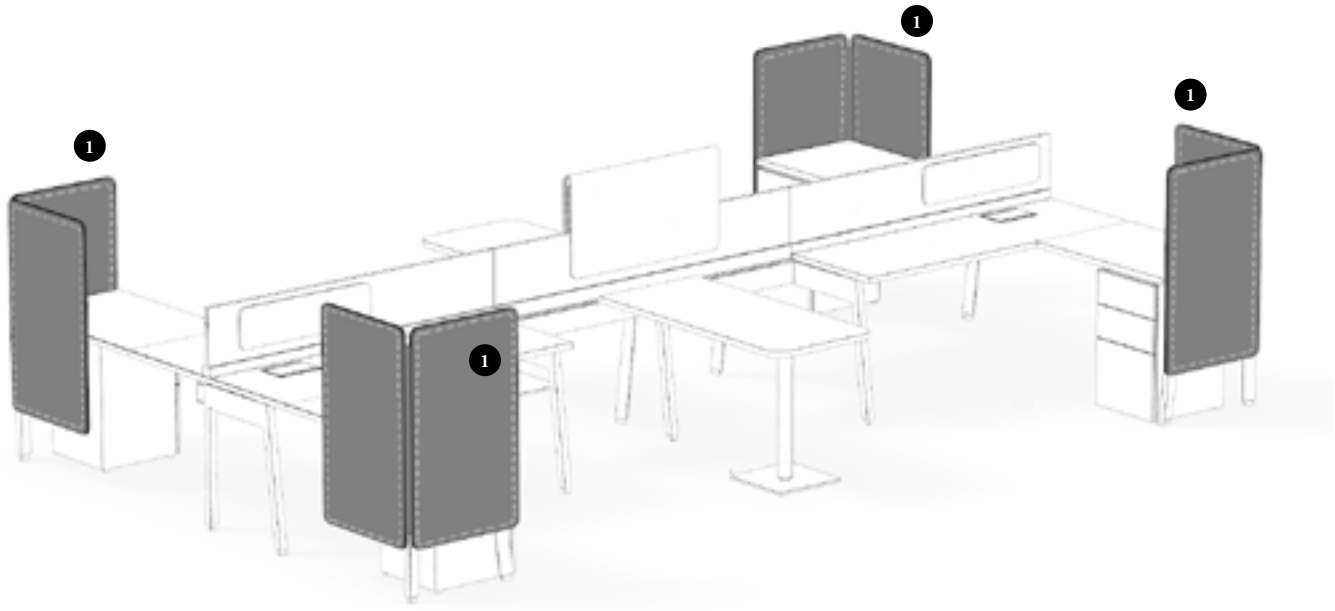

Finishes

Felt Finishes: Loft*
* Two-sided finished products have the same finish on both sides
Stitches Finishes: Carbon Coordinate (C), Shale Coordinate (E), Carrara Coordinate (G) or Umber Coordinate (M)
Zipper Finishes are available in Felt Coordinate (F) color only

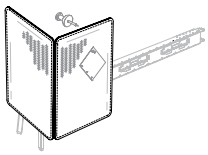

Beam-Mounted (JNSECFB)

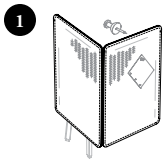

Worksurface-Mounted (JNSECFW)

Felt Corner Elevated Screen (JNSECF)

- Felt Finish is the same on both sides of the two panels
- Both panels are joined by a zipper that matches Felt Finish
- Are tackable on both sides
- Are available in Beam-Mounted (B) or Worksurface (W) mounting styles for one side, need a Leg on the other side to be mounted
- 42", 51" or 57" high datum are available
- Widths include 18" – 36" (6" increments)
- Depths include 18" – 36" (6" increments)
- Width is always same dimension than depth
- Comes with Radius Corner Details (R)

felt corner elevated screen basics (continued)

datum heights & alignments

- Corner Elevated Screens match Teknion standard datum heights of 42", 51" and 57" when mounted on worksurfaces or Structural Beams (JNDBB) or Chicago Structural Beams (JNDCB) with Leg
- Can be placed next to a Felt Elevated Screen but **cannot** be linked

Worksurface-Mounted

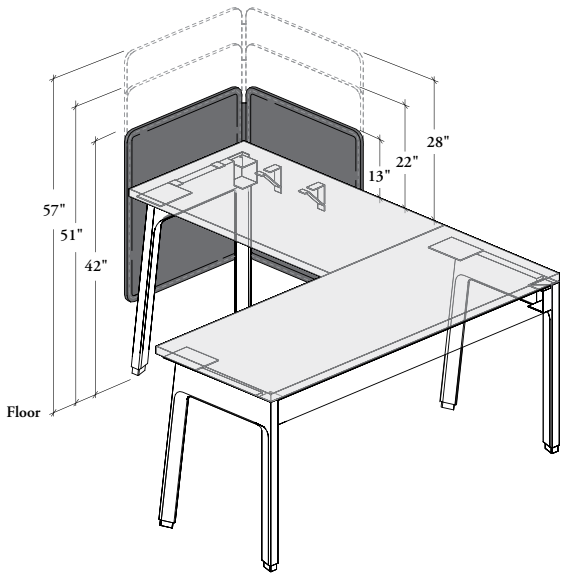

Beam-Mounted

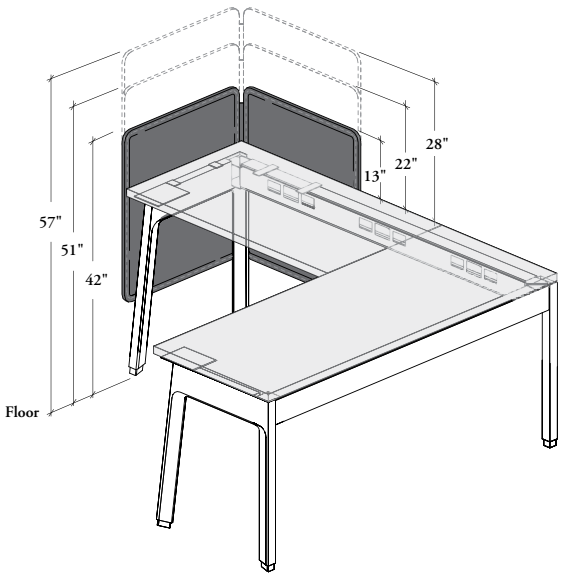

width extension for corner application

- Width extensions are **not** offered on this product. It can be specified Standard Width (S) only
- Can be specified the same dimension than the leg on which it is mounted, or can be shorter for a more casual look

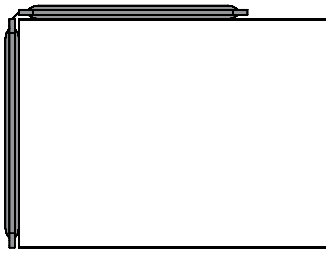

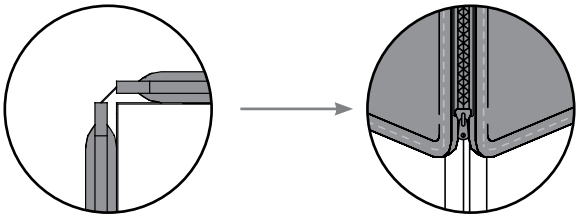

The gap usually seen at the 90° junction of two Felt Elevated Screens is closed by a zipper

understanding beam- or -worksurface-mounting style for felt corner elevated screen

Understanding Beam- or Worksurface-Mounting Styles is key in specifying Felt Corner Elevated Screens.

- Two mounting style are available with Felt Corner Elevated Screens:
  - – Beam-Mounted (B)
  - – Worksurface (W)

Both Mounting Styles dictate on what is mounted one of the panels, the second panel is always mounted on a single-sided leg

- Can be specified Leg on Left (L) or Leg on Right (R) and can only be used with:
  - – Single-Sided Structural Leg – End Position (JNDLS)
  - – Single-Sided Freestanding Leg (JNALS)

All other supports are **not** compatible

beam-mounted configuration

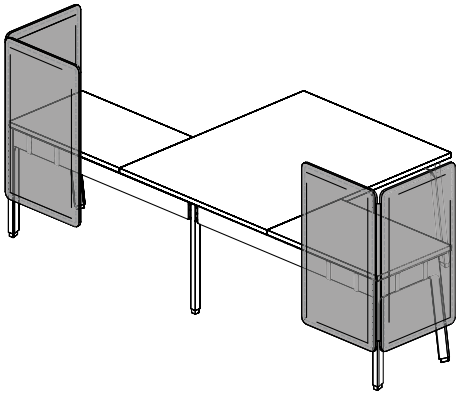

- One side is mounted to a Single-Sided Beam and other side to a Single-Sided Structural Leg – End Position
- Beam and leg mounting hardware are included for installation

worksurface-mounted configuration

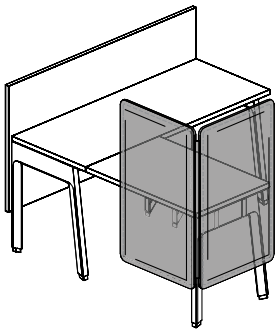

- One side is mounted to a Single-Sided Rectangular Worksurface (Standard or Exposed Beam Worksurfaces) and other side to a Single-Sided Freestanding Leg
- Worksurface and leg mounting hardware are included for installation

The following supports are **not** compatible:

– Structural Leg – Double-Sided (JNDLD)
– Structural Legs – Fence/Beam-Mounted Cabinet/Peninsula (JNDLF, JNDLL, JNDLP)
– Structural Post (JNDPU)
– Structural Post with Front Leg (JNDPF)
– Freestanding Leg – Double-Sided (JNALD)
– Freestanding Legs – Lateral Cabinet/Peninsula (JNALL, JNALP)
– Peninsula Monopod Base – Round (JNAPP)
– Bevel Base on Run-Off (JNHB)
– All 28" high Freestanding Storage

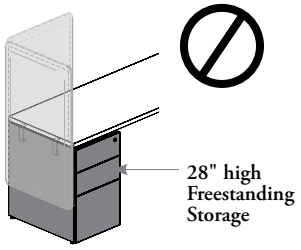

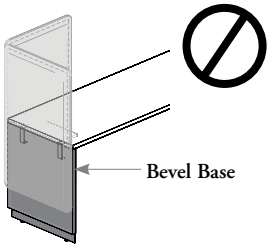

planning with felt corner elevated screens

The following should be considered when planning with Felt Corner Elevated Screens.

- Provide casual space division with various levels of privacy
- Can be mounted to a beam or an unstructured worksurface on one side, need a Leg on the other side to be mounted
- Can be mounted on Single-Sided Workstation only
- Can be installed on- or off-module
- The screen width and depth must be specified of the same dimension

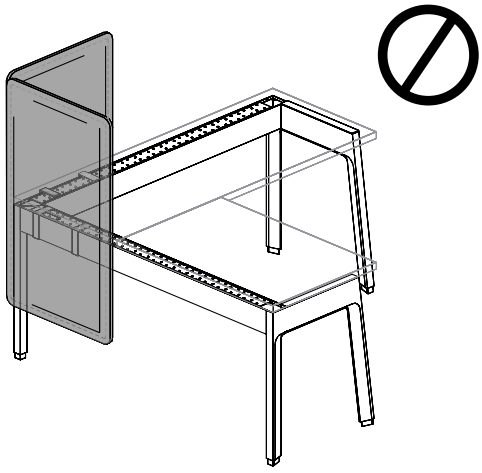

Beam-Mounted Configuration and Beam-to-Beam Application
The screen **cannot** be mounted on the 90° junction of two beams

felt end screen – worksurface-mounted basics

The Felt End Screen – Worksurface-Mounted offers noise reduction control, provides physical separation with access pathway and personal storage when mounted on workstation ends.

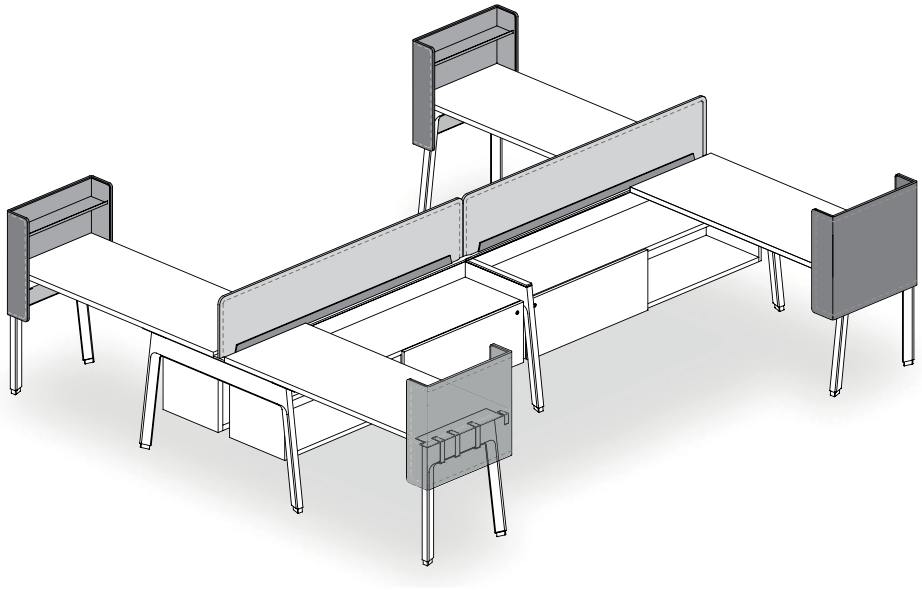

Finishes

Felt Finishes (outside screen and shelf liner): Loft
Stitches Finishes: Carbon Coordinate (C), Shale Coordinate (E), Carrara Coordinate (G) or Umber Coordinate (M)
Inside Finishes: Foundation, Mica and Accent

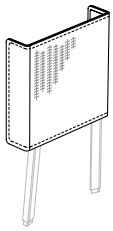

Felt End Screen – Worksurface-Mounted (JNSELE)

- Outside screen (corridor) is finished in Felt and is tackable
- Inside screen and small shelf (worksurface side edge) are finished in metal (felt liner on shelf) and is magnetic
- Are available in Angled Leg on Left (L) or Angled Leg on Right (R) mounting styles
- Only 42" high datum is available
- Widths include 24" or 30"
- Comes with Radius Corner Details (R)
- Provide partial privacy from 11" below worksurface up to 13" above worksurface

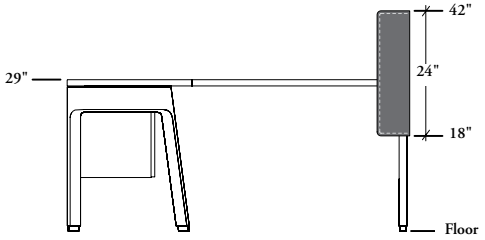

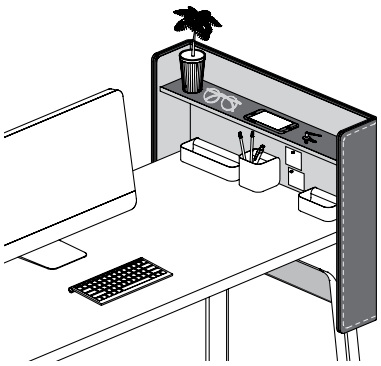

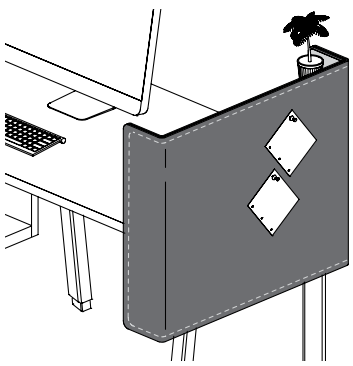

planning with felt end screen – worksurface-mounted

The following should be considered when planning with a Felt End Screen – Worksurface-Mounted.

- Must be specified on-module with the worksurface depth on which it is mounted
- Can be installed on one side of the worksurface only

angled on left (L) or right (R) applications

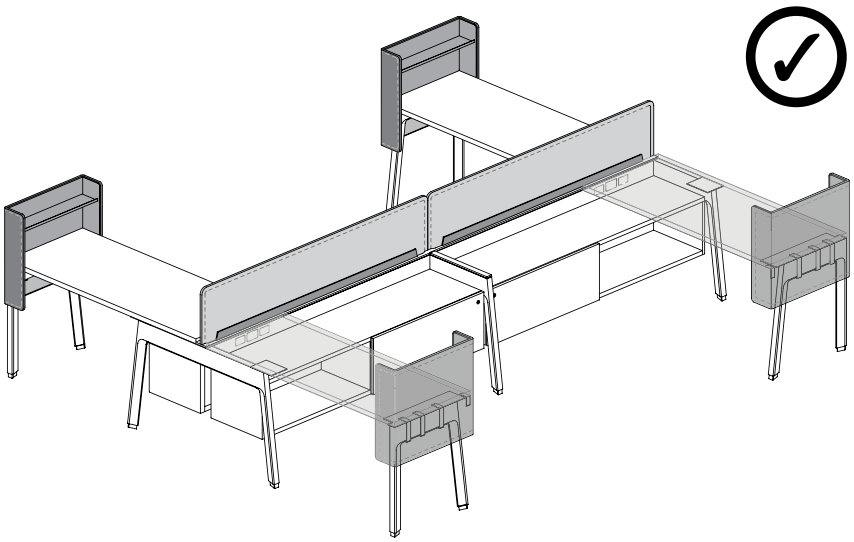

- Can be mounted on Single-Sided Workstation with a combination of a worksurface and a leg only
- Support Connection Angled on Left or Angled on Right (Shown) configuration can only be used with:
  - Single-Sided Structural Leg – End Position (JNDLS)
  - Single-Sided Freestanding Leg (JNALS) (Shown)
- Support Connection handedness is determined by the side of the support when looking at the inner side of the screen
- Leg mounting hardware is included

floor screen – beam- or worksurface-mounted basics

The Floor Screens – Beam- or Worksurface-Mounted create privacy and physical separation between workstation or the corridor when overlay on a structural beam or a worksurface.

- Floor Screens are offered to match with Teknion standard datum heights of 42", 51" or 57"
- 5/8" above the floor for complete enclosure
- Are available in two styles:

Beam-Mounted: Mounts on- or off-module on the back side of Single-Sided Structural Beams (JNDBB) or Chicago Structural Beams (JNDCB), exposed or concealed underneath a worksurface

Worksurface-Mounted: Mounts on- or off-module on the back edge of Single-Sided Rectangular Worksurfaces. Off-modularity may be limited with certain Mounting Styles

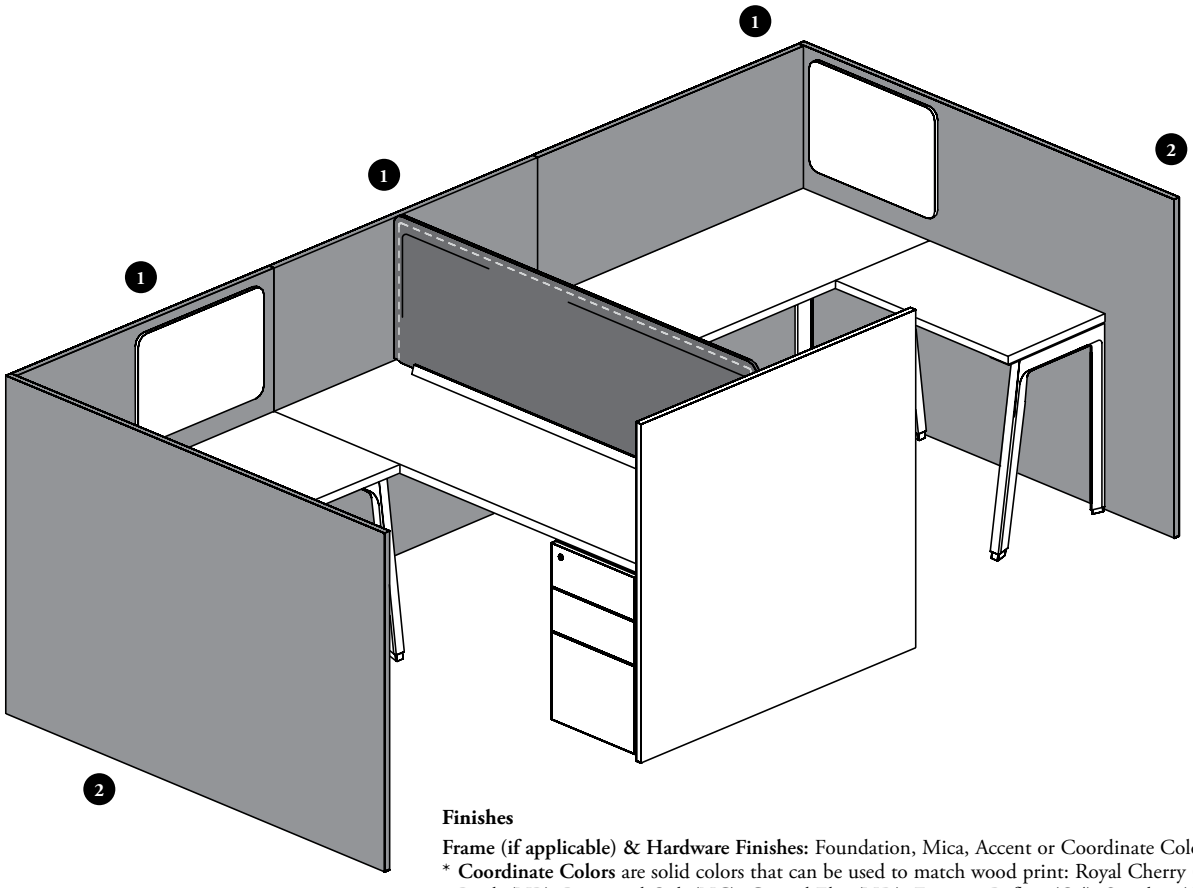

Finishes

Frame (if applicable) & Hardware Finishes: Foundation, Mica, Accent or Coordinate Colors*

* **Coordinate Colors** are solid colors that can be used to match wood print: Royal Cherry (M8), Ivory Birch (NB), Provincial Oak (NC), Coastal Elm (ND), Espresso Reflect (Q4), Stainless (Q6), Walnut Cathedralgrain (Q7), Mercurial Walnut (Q9), Java Walnut (R7), Urban Walnut (R8), Choice Maple (R9), Estate Cherry (V1), Campus Oak (VD), Flax Reflect (VL), Pecan Reflect (VV), Cocoa Brown Reflect (W8) and Sycamore Reflect (W9)

Screen Finish: Source Laminate

Glass Finishes: Clear (CL), Frost, (FT), Satin (FB), Clear – Low Iron (LA)** or Frost – Low Iron (LB)**

** **Low Iron Glass Finishes** reduce the greenish render of standard glass. They should be specified anytime this product is installed on the same workstation than a Glass Elevated Screen

Pass-Through Ring Finish: Platinum Coordinate

floor screen – beam- or worksurface-mounted basics (continued)

- 42", 51" or 57" high visual screen that provides privacy to floor level
- Does **not** provide support to the worksurface

1

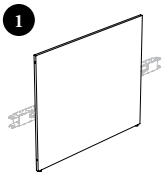

Beam-Mounted (JNSFSB)

2

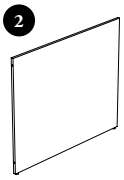

Worksurface-Mounted (JNSFSW)

Solid Floor Screen – Beam-Mounted (JNSFSB) or Solid Floor Screen – Worksurface-Mounted (JNSFSW)

- Available 1" thick and two-sided finished
- 42", 51" or 57" high datum are available
- Comes with Standard Corner Details (S)
- Screen ends can be specified With (W) or Without (N) Alignment Holes to allow installation of Linking Devices

Beam-Mounted only

- Widths include 24" – 84" (6" increments)
- Can be specified No Pass-Through (N) only

Worksurface-Mounted only

- Widths include 24" – 84" (6" increments)
- Can be specified Standard-Height Pass-Through (S) or No Pass-Through (N)

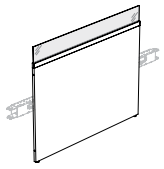

Beam-Mounted (JNSFGB)

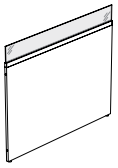

Worksurface-Mounted (JNSFGW)

Glass Floor Screen – Beam-Mounted (JNSFGB) or Glass Floor Screen – Worksurface-Mounted (JNSFGW)

- Available with a 1/4" (6 mm) thick tempered glass on top
- Low Iron Glass Finishes reduce the greenish render of standard glass. They should be specified anytime this product is installed on the same workstation than a Glass Elevated Screen
- 42", 51"or 57" high datum are available
- 29" or 42" glass starting high are available
- Solid portion of screen ends can be specified With (W) or Without (N) Alignment Holes to allow installation of Linking Devices

Beam-Mounted only

- Widths include 24" – 84" (6" increments)
- Can be specified No Pass-Through (N) only

Worksurface-Mounted only

- Widths include 24" – 84" (6" increments)
- Can be specified Standard-Height Pass-Through (S) (if applicable) or No Pass-Through (N)

floor screen – beam- or worksurface-mounted basics (continued)

datum heights & alignments

- Floor Screens match Teknion standard datum heights of 42", 51" and 57" when mounted on worksurfaces, Structural Beams or Legs
- If specified, solid portion of screens comes with alignment devices. Screens of the same height and material can be linked together
- Floor Screens can be linked together in 90° corners. This requires the appropriate specification of the Width Extension for Corner Application. Refer to page 489 for details

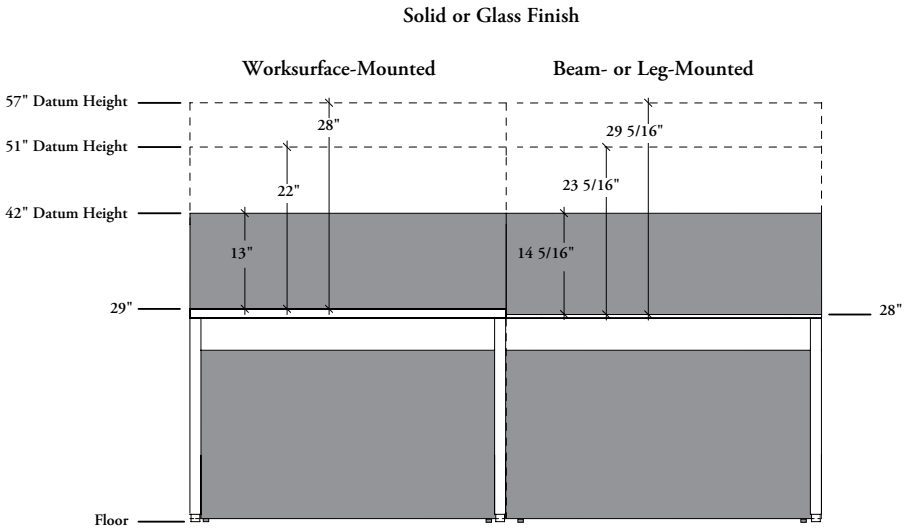

- The Alignment Holes option must be specified and is recommended on Solid Screens to allow the installation of linking devices. Caps are supplied for unused holes
- Linking Strip for Glass Screen can be specified separately to provide alignment of glass portion. Refer on page 498 for details

grain direction

- Always runs horizontal
- The grain direction on Laminate Solid Screens is **not** directional. It may appear in different directions on side-by-side screens

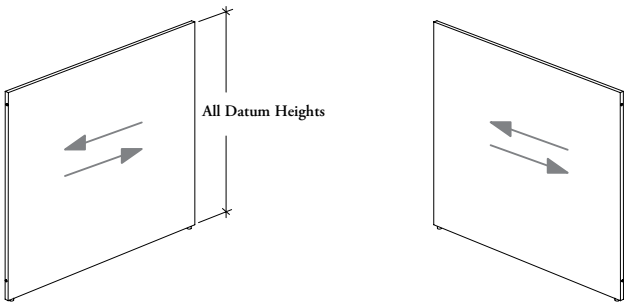

understanding beam- or worksurface-mounting style for floor screens

Understanding the different beam- or worksurface-mounting styles is key in specifying appropriate Floor Screens – Beam- or Worksurface-Mounted.

beam-mounted configuration

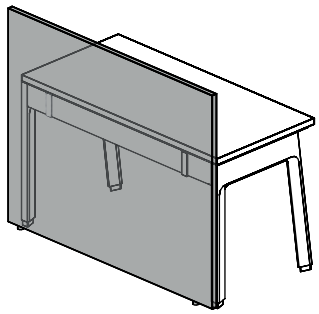

- Never exceeds a beam
- Requires a beam (JNDBB or JNDCB) for installation, hardware included
- Mounts on- or off-module on the back side of Single-Sided Beams, exposed or concealed underneath a worksurface (Shown)
- Off-modularity is allowed under certain conditions. Refer to page 495 for details
- **Cannot** mount on Structural Beams when used in Low Height Fence application

worksurface-mounted configuration

- Requires an unstructured worksurface for installation and can exceed over next worksurface support when specified, no freewing allowed
- Three mounting style are available with Worksurface-Mounted Floor Screens:
  – Support Connection on Left (L)
  – Support Connection on Right (R)
  – Worksurface Only (W)

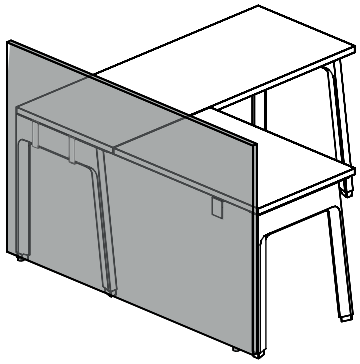

Support Connection on Left (L) or Right (R) (Shown) Mounting Style

- Extended freewing application is not possible with this mounting style
- Support Connection on Left or Right (Shown) configuration can only be used with:
  – Single-Sided Structural Leg – End Position (JNDLS) (Shown)
  – Structural Post with Front Leg – End Position (JNDPF)
  – Structural Post with Front Leg – End Position (JNDPF)
  – Double-Sided Structural Leg (JNDLD)
  – Double-Sided Freestanding Leg (JNALD)
- Support Connection handedness is determined by the side of the support when looking at the inner side of the screen
- Single-Sided supports will be fully covered by screen, Double-Sided supports will be half-covered
- Leg (if specified) and worksurface mounting hardware is included

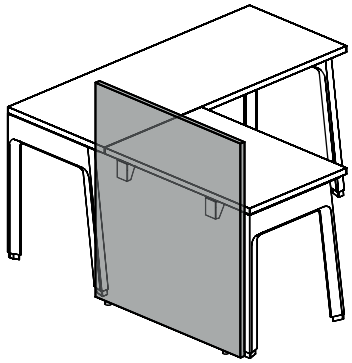

Worksurface Only (W) Mounting Style

- Never exceeds worksurface dimension
- Worksurface Only configuration can be specified for installation on unstructured worksurfaces only
- Worksurface mounting hardware is included
- It is strongly recommended to add a Worksurface Reinforcement Channel (JNWRC) underneath worksurfaces on which a Worksurface Only Elevated Screen is mounted. This adds screen rigidity

understanding width extension for corner application – floor screens – beam- or worksurface-mounted

The following should considered when specifying with Floor Screens – Beam- or Worksurface-Mounted.

- Width extension for each material is related to its thickness and differ from one another
- Appropriate specification of this option will allow closing 90° corners made with screens of same material
- Screens of different materials can be installed on same workstation but **cannot** be linked. Width Extension for Corner Application should be specified Standard Width in these applications and corners **cannot** be closed
- The width dimensions are not all available with Width Extension for Corner Application option; see individual product page for details

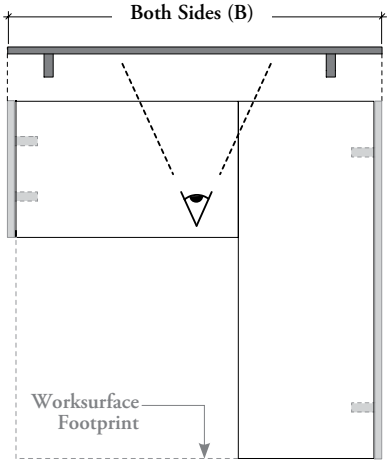

Both Sides (S)

- Both ends of screen are extended to cover the thickness of perpendicular screens of same material
- Can be specified with:
  - Solid or with Glass Floor Screens – Beam-Mounted
  - Solid or with Glass Floor Screens – Worksurface-Mounted

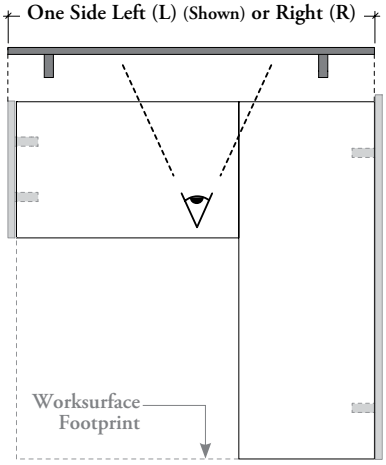

One Side – Left (L) or Right (R)

- Either left or right end of screen is extended to cover the thickness of a perpendicular screen of same material
- Handedness is determined by the extended end position when looking at the inner side of the screen
- Can be specified with:
  - Solid or with Glass Floor Screens – Beam-Mounted
  - Solid or with Glass Floor Screens – Worksurface-Mounted

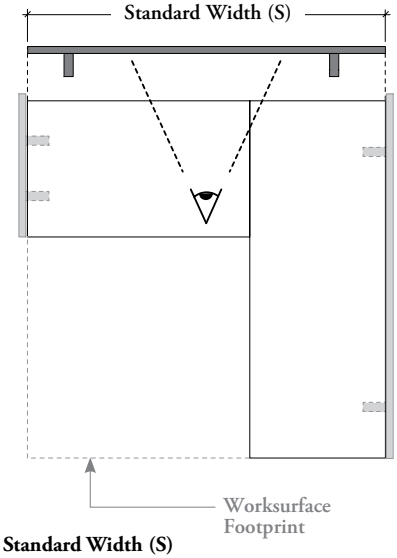

Standard Width (S)

- Both ends of screen come flush with what it is mounted to
- Can be specified with:
  - Solid or with Glass Floor Screens – Beam-Mounted
  - Solid or with Glass Floor Screens – Worksurface-Mounted

90° Corner Application with Floor Screen – Beam- or Worksurface-Mounted and One Side Extended (O) with Floor Screen – Leg-Mounted

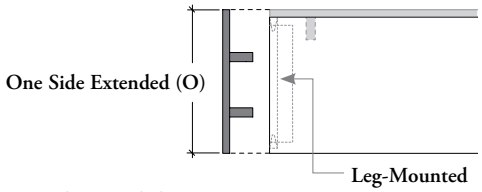

One Side Extended (O)

- Width extension can only be specified on the back end of Single-Sided Legs. As Legs are already handed, there is no need to specify an orientation
- Can be specified with Solid or with Glass Floor Screens – Leg-Mounted only, refer on Leg-Mounted Screens section for more details

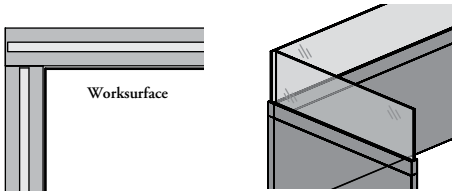

Corners made from two Floor Screens with Glass will be closed on the solid portion only

understanding floor screen – beam- or worksurface-mounting style specification

Understanding Screen Beam- or Worksurface-Mounting Styles is key in specifying the appropriate Floor Screen – Beam- or Worksurface-Mounted.

- If a beam is involved in the mounting of a Floor Screen, the Beam-Mounted Style must be specified. Refer to next page for illustrations
- Without beam mounting styles are easily understood by answering the following question: Is there **only** a leg involved? If yes, the Leg-Mounted Style must be specified; if no, one of the three Worksurface-Mounted Styles must be specified. See illustrations below

worksurface-mounted screens

Worksurface-Mounted – Support Connection on Right

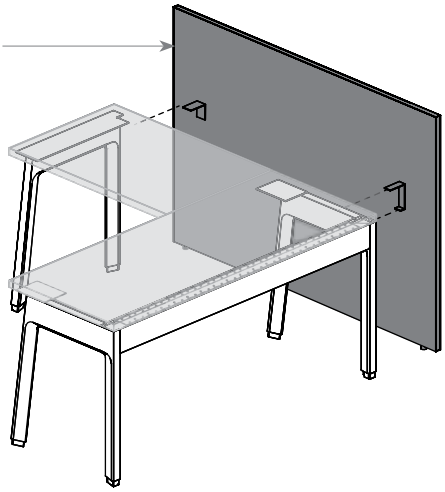

When mounted in combination with a worksurface and a leg, a Floor Screen – Worksurface-Mounted must be specified

Worksurface-Mounted – Support Connection on Right

Worksurface-Mounted – Support Connection on Left

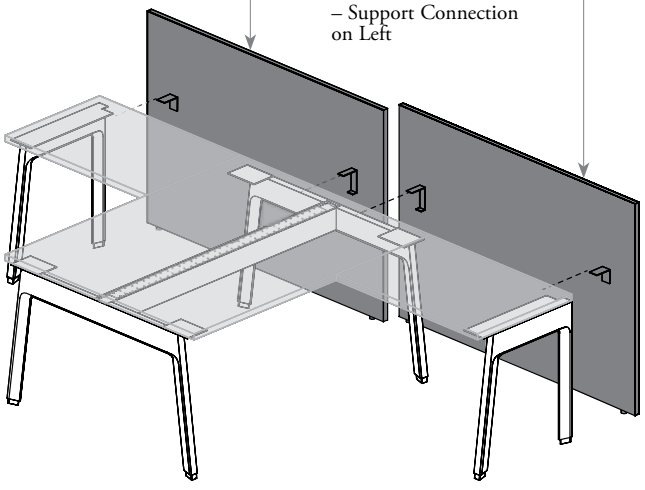

When two panels are mounted in combination with a worksurface and a leg, two Floor Screens – Worksurface-Mounted must be specified

Worksurface-Mounted – Support Connection on Right

Leg-Mounted – Right

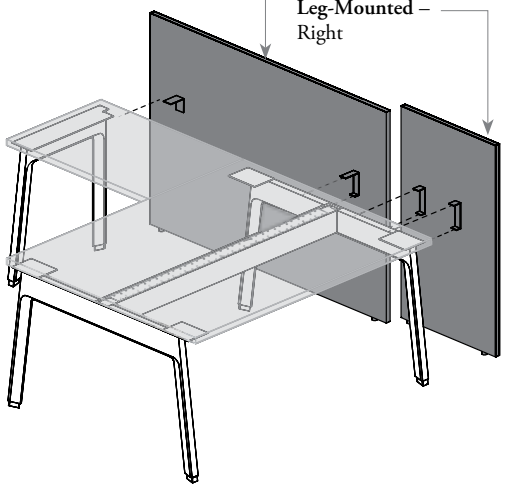

Left screen is mounted in combination with a worksurface and a leg, a Floor Screen – Worksurface-Mounted must be specified; right screen is mounted to a leg only, a Floor Screen – Leg-Mounted must be specified. For more details on Floor Screen Leg-Mounting style, refer to Leg-Mounted Screens section

understanding floor screen – beam- or worksurface-mounting style specification (continued)

Floor Screens **cannot** span more than one structural beam

beam-mounted screens

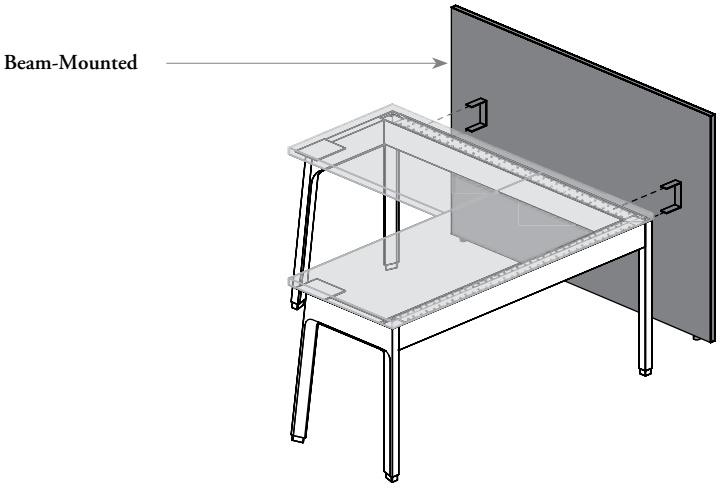

When mounted to a structural beam, a Floor Screen – Beam-Mounted must be specified

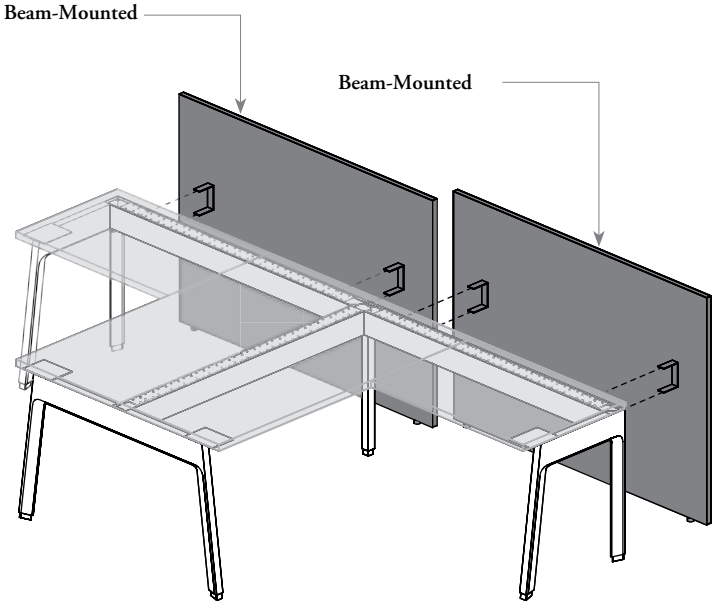

When two screens are mounted on two structural beams, two Floor Screens – Beam-Mounted must be specified

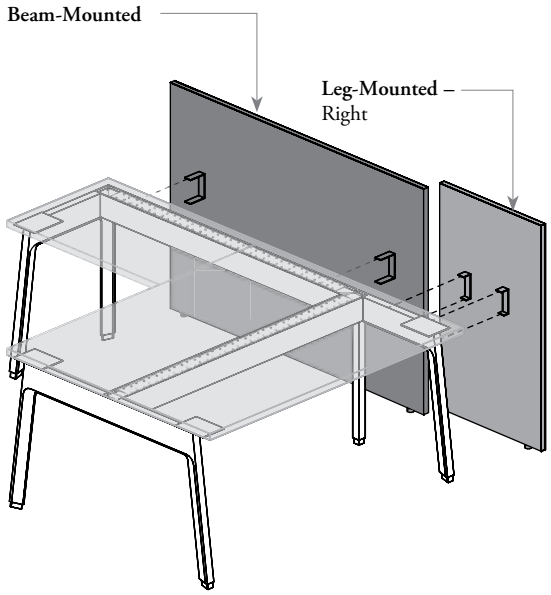

Left screen is mounted to a structural beam, a Floor Screen – Beam-Mounted must be specified; right screenl is mounted to a leg only, a Floor Screen – Leg-Mounted must also be specified. For more details on Floor Screen Leg-Mounting style, refer to Leg-Mounted Screens section

planning with floor screens – beam- or worksurface-mounted

worksurface-mounted – on-module applications

Worksurface-Mounted – Support Connection Application

A Worksurface-Mounted screen **cannot** span across the whole depth of a Double-Sided Leg. It must reach the rear end of a Single-Sided Leg or the middle of a Double-Sided Leg. In the case shown above, two screens are needed: best planning is with a Worksurface-Mounted – Support Connection on Right screen that covers the left workstation footprint, which is used in combination with a Leg-Mounted – Right screen that covers the footprint on right. The alternative would be to use a Worksurface-Mounted – Worksurface Only to cover the return on the workstation on left, which could be used in combination with a Leg-Mounted – Double-Sided Leg Overlay that covers the Double-Sided Leg

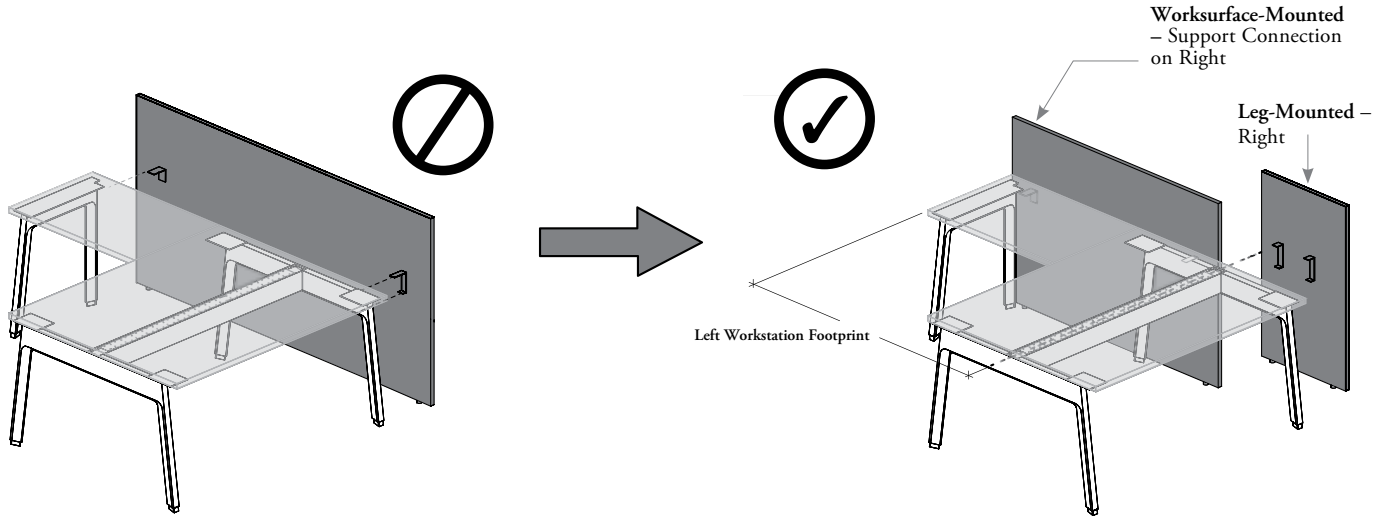

Worksurface-Mounted with Freestanding Storage Application

- Worksurface-Mounted Floor Screens can span over all Freestanding Storage
- When next to a tower, a Floor Screen can be specified at the same height or lower than the tower

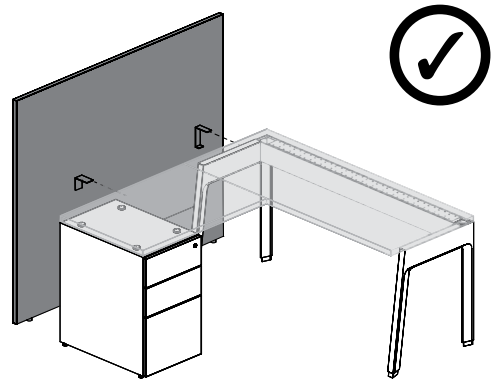

worksurface-mounted – off-module applications

Worksurface-Mounted Application

Off-modularity is allowed for Worksurface-Mounted – Support Connection style if the screen is justified with the rear end of a single-sided leg or with the middle of a double-sided leg

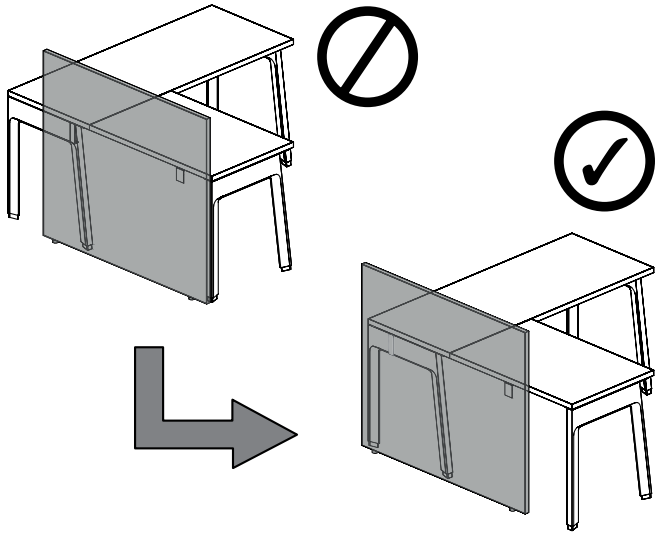

planning with floor screens – beam- or worksurface-mounted (continued)

beam-mounted – on-module applications

Beam-Mounted Application with Double-Sided Worksurface and Two Returns

- Beam-Mounted Floor Screens **cannot** span across two beams. Structural Posts and Legs are the beam screen boundaries
- Each workstation footprint should have its own screen. The junction of two screens in this application should be centered with Structural Post

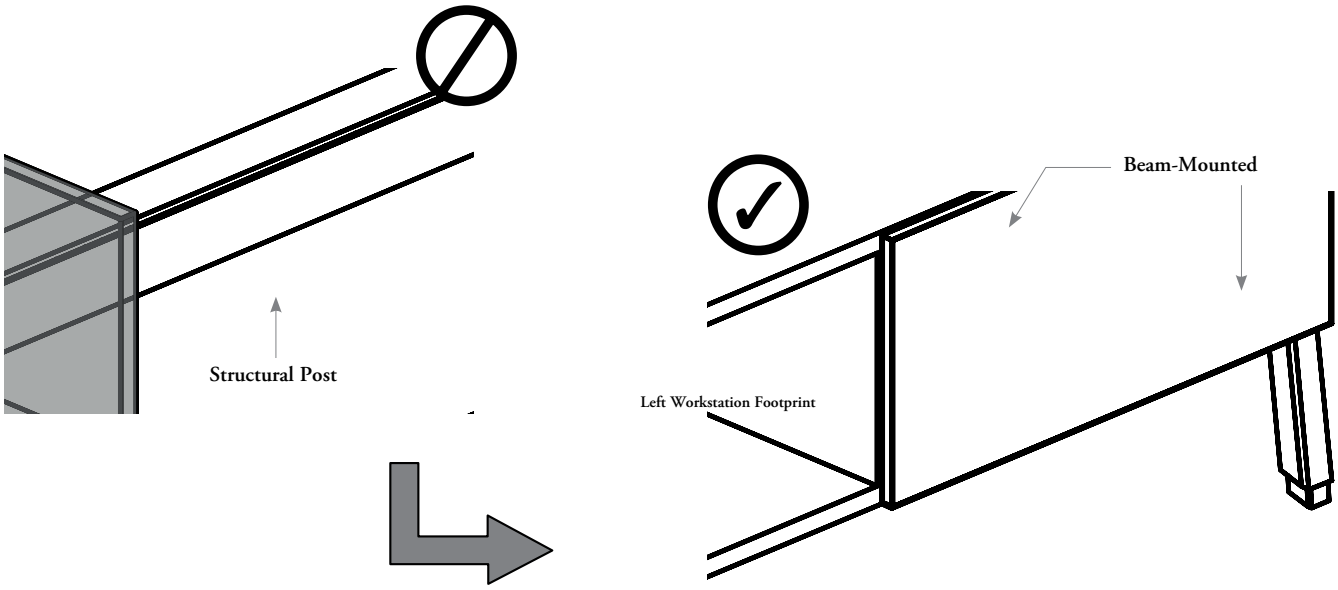

Beam- and Leg-Mounted Application

- Beam-Mounted Floor Screens **cannot** span across Structural Post with Front Legs
- Each workstation footprint should have its own screen. The junction of two screens in this application should be centered with Structural Post. Screen on left should be Beam-Mounted, screen on right should be Leg-Mounted – Right

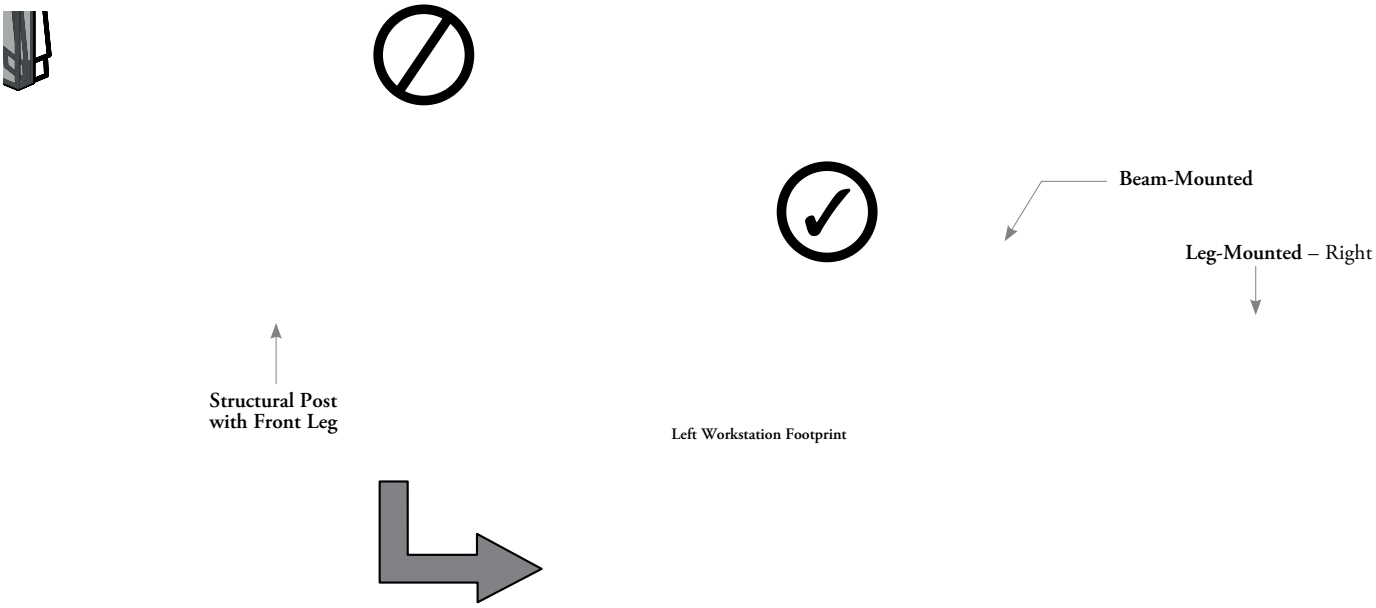

planning with floor screens – beam- or worksurface-mounted (continued)

beam-mounted – on-module applications (continued)

Beam-Mounted Application with Beam Tower

- From 54" wide and up, a Beam-Mounted Floor Screen can span over a beam tower which its width is smaller than half the width of the beam
- When next to a tower, a Floor Screen can be specified at the same height or lower than the tower

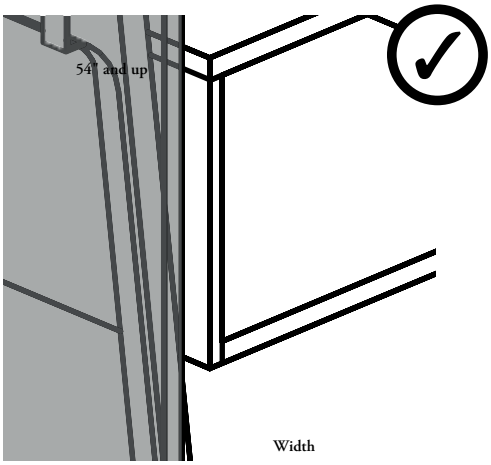

beam-mounted – on- and off-module stability

Beam-Mounted Application with Bench Workstation

The table above shows the combinations of screens heights, worksurface depth and minimum span width required to stabilize a single-sided bench workstation. The restricted combinations can be stabilized with the use of Suspended Credenzas or Returns

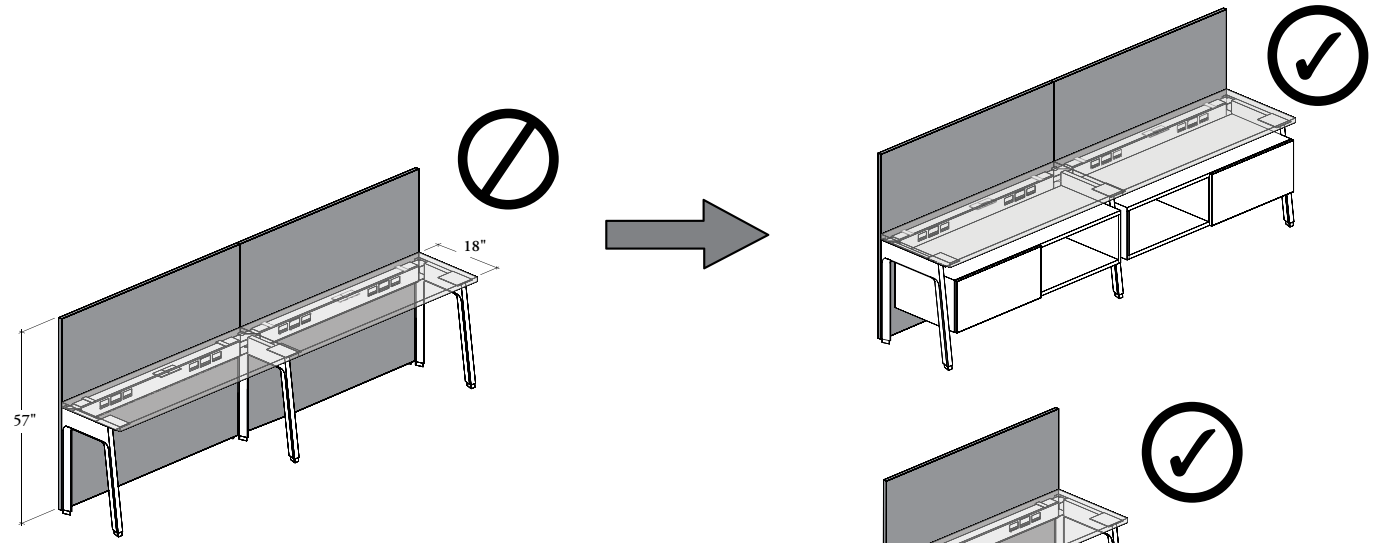

	Worksurface Depth		
Screen Height	**18"**	**24"**	**30"**
42" or 44"	from 168"span width	Allowed	Allowed
51" or 53"	Restricted	from 168" span width	Allowed
57" or 59"	Restricted	from 168" span width	Allowed

planning with floor screens – beam- or worksurface-mounted (continued)

beam-mounted – off-module applications

Beam-Mounted with Off-Module Application
Beam-Mounted Floor Screens can be specified off-module on one or both sides when following the stability rule. Refer to page 494 for details

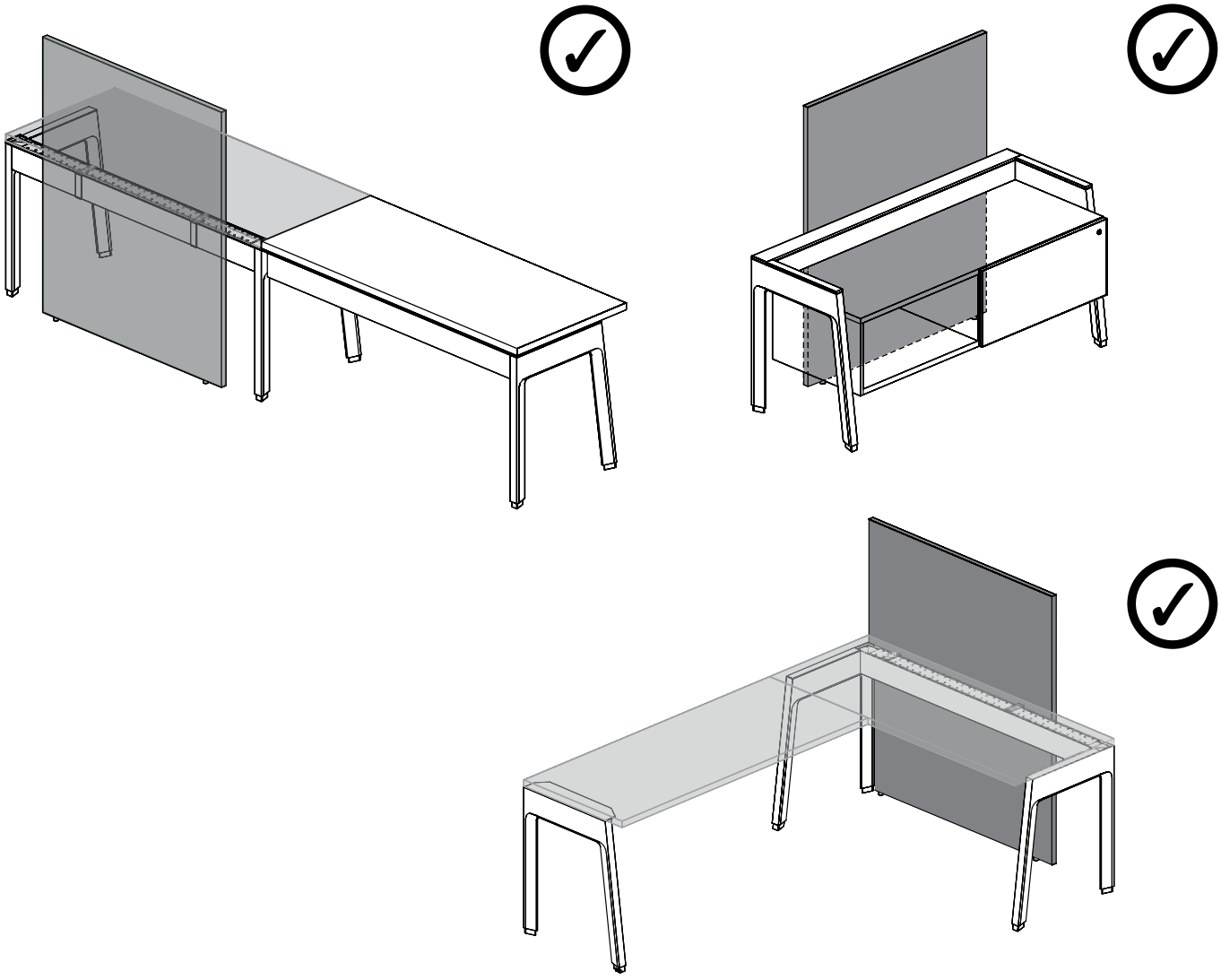

planning with floor screens – beam- or worksurface-mounted (continued)

- Floor Screen – Worksurface-Mounted with Support Connection can also be used in freewing applications providing extended territorial division
- Can be used under certain conditions on Single- and/or Double-Sided Workstation
- Floor Screens used in freewing applications need to be mounted on a Structural Leg. Freestanding supports **cannot** be used for extended screen applications
- Freewing applications require a minimum desk width of 42"

with single-sided workstation – freewing application

Worksurface Only Application vs Worksurface-Mounted with Support Connection

- When a Worksurface Only option is specified, A Floor Screen **cannot** exceed the workstation
- To allow exceeding the workstation, the Worksurface-Mounted with Support Connection option must be specified

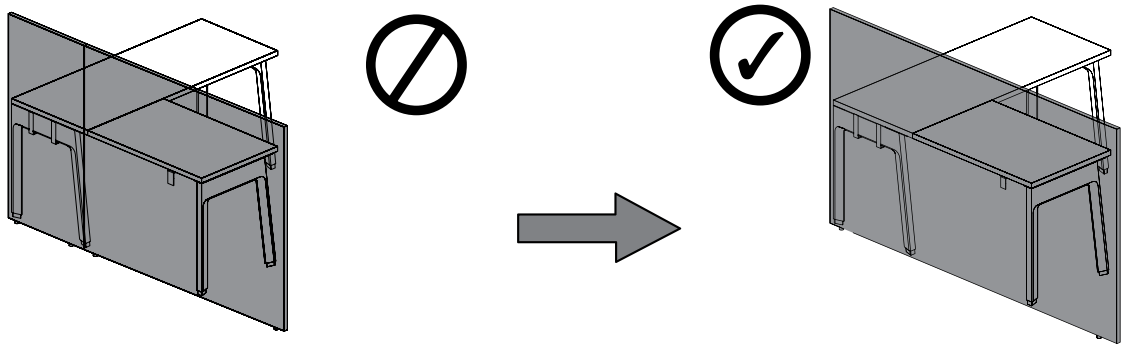

with double-sided workstation – freewing application

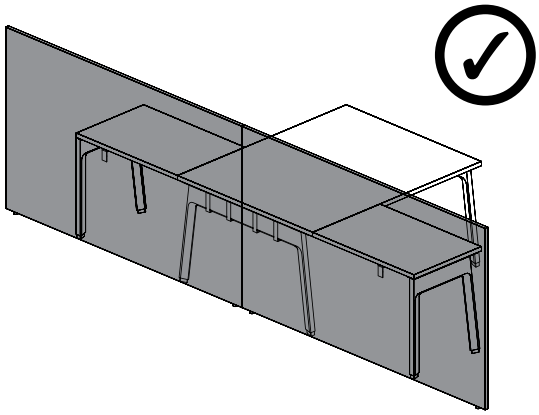

Floor Screen – Worksurface-Mounted with Support Connection justified with the center of Double-Sided Structural Legs – End Option

Two Floor Screens can be justified with center of 48" or 60" deep double-sided structural supports and can exceed the return worksurfaces mounted on each side. The extension dimension may vary from one side to the other. It is recommended to specify the screens With Alignment Holes but it is **not** mandatory

with single- or double-sided workstation – freewing application

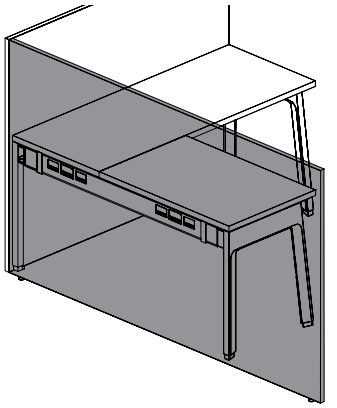

Beam-Mounted Application

A Floor Screen **cannot** exceed a workstation with Single- or Double-Sided Beam

planning with floor screens – worksurface-mounted – cable pass-through

Information on this page should be considered when planning with Cable Pass-Through on Floor Screens – Worksurface-Mounted.

- Provide openings for electrical wiring and communication cables
- Only Floor Screen – Worksurface-Mounted with Support Connection can be specified with factory-made cable pass-through cut-outs
- Pass-Through cut-out is positioned to allow the cables to be directed in the structural beam for integrated management

- Are available in a vertical position only
- Metal Cable Pass-Through Covers (JNEGPC) can be specified separately
- Two Cable Pass-Through options are available:
  - No Pass-Through (N)
  - Standard-Height Pass-Through (S)

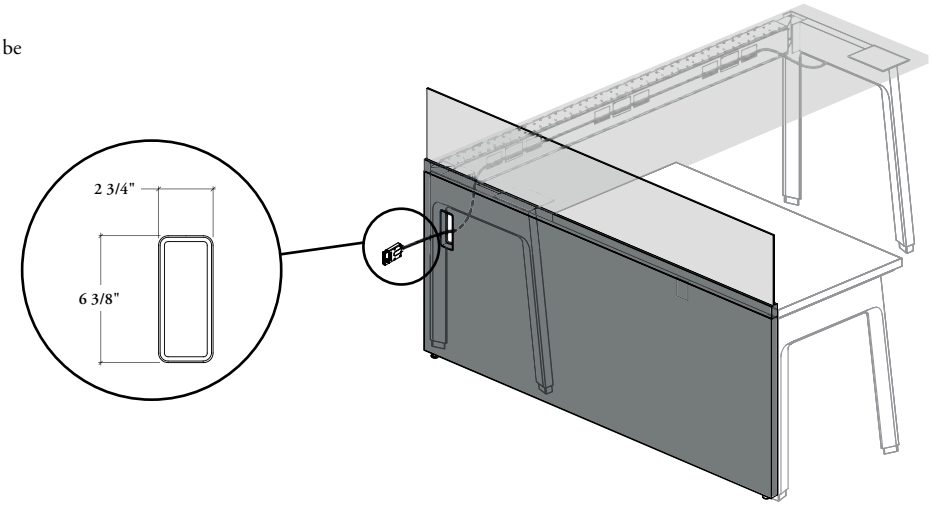

screen accessory basics

Alignment of two contiguous screens is enhanced by different devices for Solid, Fabric and Glass screen materials.

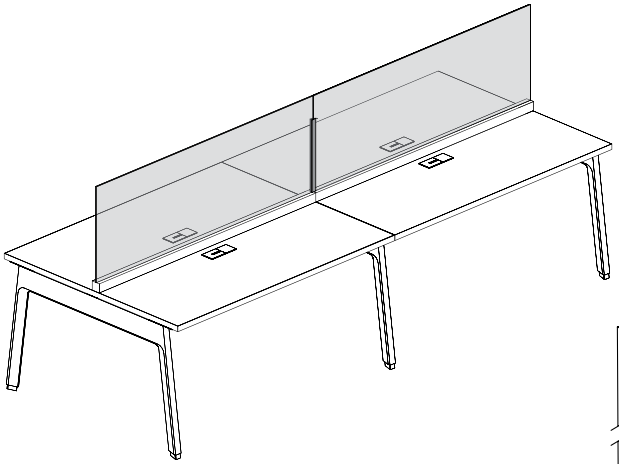

Finishes

Linking Strip Finishes: Foundation, Mica and Accent

Linking Strip for Glass Screen (JNSLS)

- Specified separately
- Connects contiguous Add-On Glass Screens or glass portion of Floor Screen with Glass
- Compatible with 42", 51"or 57" high datum, but does not reach up to top for aesthetic
- 18", 29" or 42" glass starting heights are available

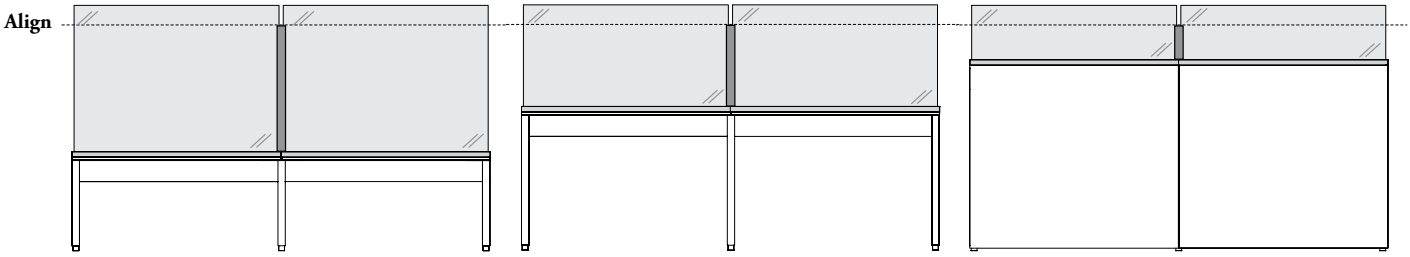

18" Starting Height on Low Height Frame **29" Starting Height on Standard Height Frame** **42" Starting Height on Floor Screen**

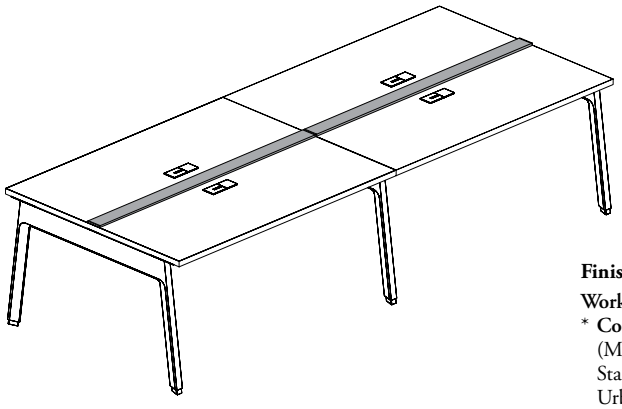

Finishes

Worksurface Retrofit Cover Finishes: Foundation, Mica, Accent and Coordinate Colors*

* **Coordinate Colors** are solid colors that can be used to match wood print: Royal Cherry (M8), Ivory Birch (NB), Provincial Oak (NC), Coastal Elm (ND), Espresso Reflect (Q4), Stainless (Q6), Walnut Cathedralgrain (Q7), Mercurial Walnut (Q9), Java Walnut (R7), Urban Walnut (R8), Choice Maple (R9), Estate Cherry (V1), Campus Oak (VD), Flax Reflect (VL), Pecan Reflect (VV), Cocoa Brown Reflect (W8) and Sycamore Reflect (W9)

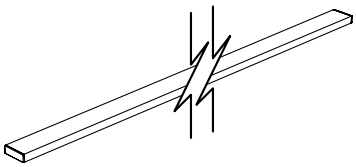

Worksurface Retrofit Cover (JNSWRC)

- Allows to cover Worksurface Add-On Screens mounting holes when screens are removed
- For Worksurface dimensions of 18" – 96" (3" increments)

planning with linking devices

The following should be considered when planning with a Linking Devices.

- Alignment of two contiguous screens is enhanced by different devices for Solid, Fabric and Glass screen materials
- Alignement devices are always included with Fabric Screens, are to be specified with the Alignment Holes option on Solid Screens and must be specified separately for Glass Screens
- Are **not** required but provide nicer aesthetic
- Screens must have the same height and finish style to use Linking Devices

Linking Device for Solid Screens

Solid Add-On, Elevated or Floor Screens – all mounted styles

- When With Alignment Holes (W) is specified on solid screens, spring-loaded dowels and finish caps are included
- All Solid Screens can be linked in 180° connections
- The appropriate specification of the Width Extension for Corner Application option will also enable linking Elevated and Floor Screens in 90° corners
- Close color matching caps are provided for unused holes. When close color match is **not** available, Soft Gris caps are provided

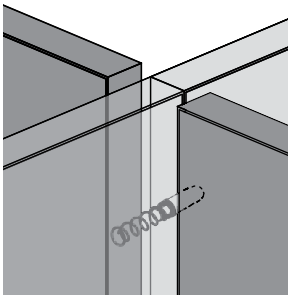

Linking Device for Solid Screens Close-Up

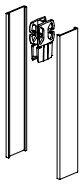

Linking Strip for Glass Screens

Glass Add-On Screens or Floor Screens with Glass – all mounted styles

- Linking Strips for Glass Screen (JNSLS) can be specified separately
- Allows 180° connections only
- The Linking Strip consists of two aluminum covers mounted on alignment clips. It is specified according to Screen Datum Height and Glass Starting Height

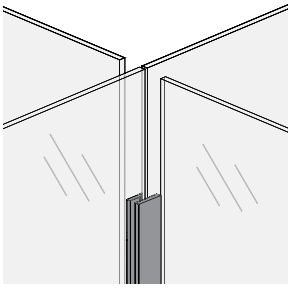

Linking Strip for Glass Screens Close-Up

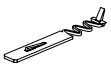

Linking Strip for Fabric Screens

Fabric Add-On or Elevated Screens – all mounted styles

- The Linking Devices are always included with fabric screens
- All Fabric Screens can be linked in 180° connections
- The appropriate specification of the Width Extension for Corner Application option will also enable linking Elevated Screens in 90° corners

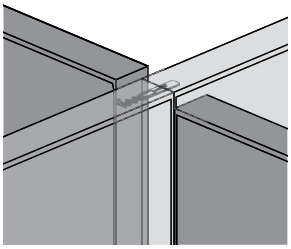

Linking Strip for Fabric Screens Close-Up

planning with linking devices (continued)

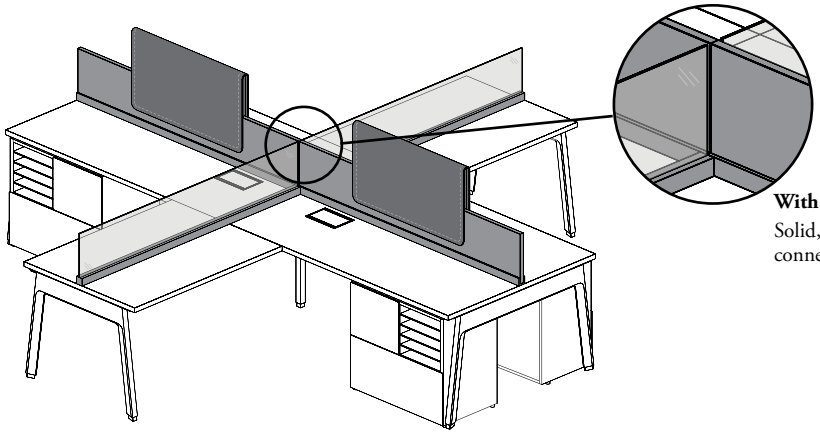

With Add-On Screen Application

Solid, Glass and Fabric Add-On Screens can only be linked in 180° connections

alignment holes positions

Alignment Hole Positions illustred below are available with Solid Elevated Screens (JNSESBor JNSESW) and Solid with or without Glass Floor Screens (JNSFSB or JNSFSW, JNSFGB or JNSFGW) Beam- or Worksurface-Mounted only

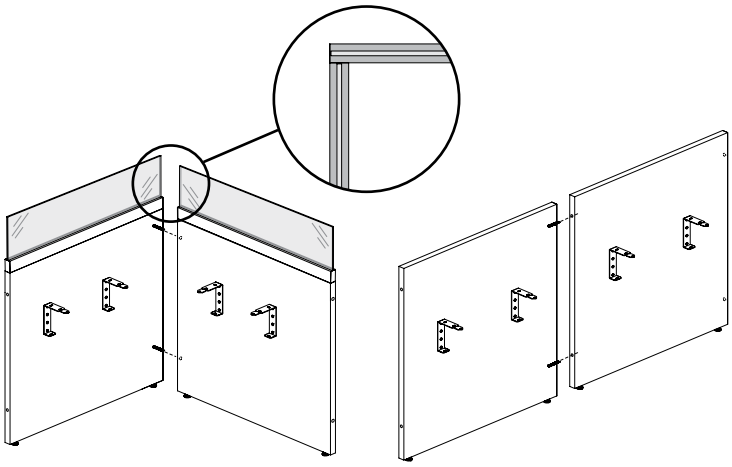

90° Connection **180° Connection**

With Solid Elevated or Floor Screen or Floor Screen with Glass (solid section only) Application

- Solid Elevated or Floor Screens, and Solid portion of Floor Screen with Glass can be linked in 180° or 90° connections when the appropriate Width Extension for Corner Application is specified. However, the Glass portion can only be linked in 180° connections
- An Elevated or a Floor Screen – Beam- or Worksurface-Mounted and an Elevated or a Floor Screen – Leg-Mounted can be specified to create a 90° connection. For Alignment Hole Positions for Elevated or Floor Screens – Leg-Mounted, refer on page 521
- The Alignment Holes position are related to the Width Extension for Corner Application option and is established like the following:

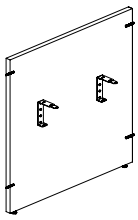

Standard Width (S)

Two holes on both side edges

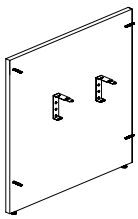

One Side– Left (L)

- Two holes on right edge
- Two holes on extended surface on left

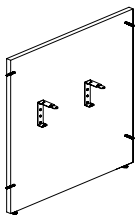

One Side– Right (R)

- Two holes on left edge
- Two holes on extended surface on Right

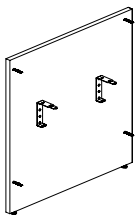

Both Sides (B)

Two holes on extended surface on Right and two holes on extended surface on Left

planning with linking devices (continued)

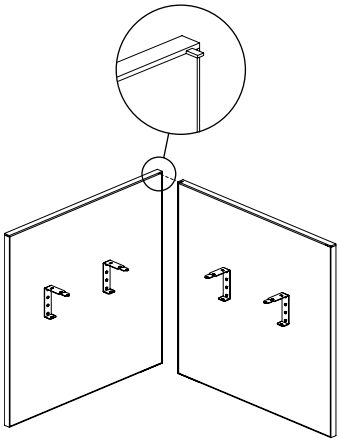

90° Connection

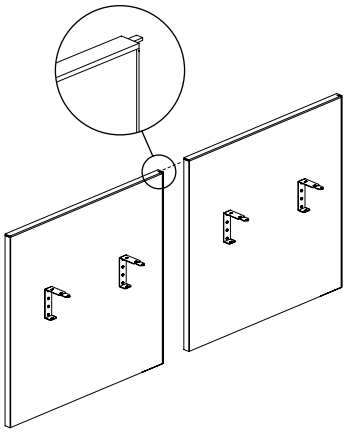

180° Connection

With Fabric Elevated Screen Application

- Fabric Elevated Screens can be linked in 180° or 90° connection when the appropriate Width Extension for Corner Application is specified
- Channel for linking device is discrete and always provided for 180° connections
- Additional channels are provided dependently on the Width Extension for Corner Application option and are established like the following:

Width Extension for Corner Application detail:

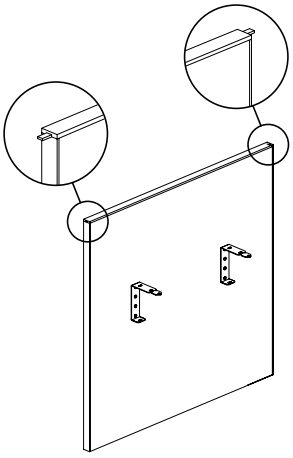

Standard Width (S)
One top channel on each end

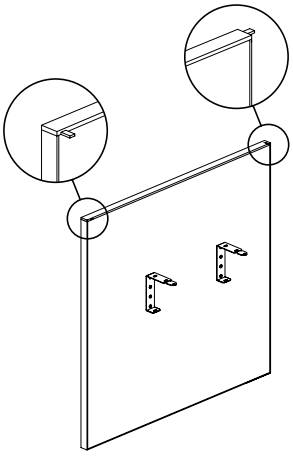

One Side– Left (L)

- One top channel on each end
- One additional top channel on extended surface on Left

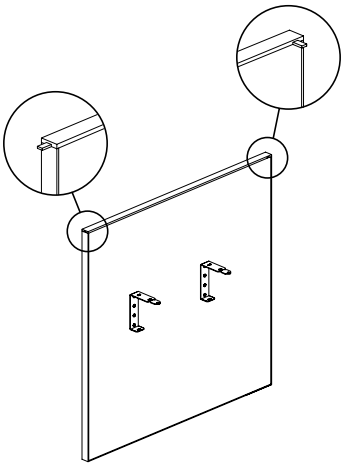

One Side– Right (R)

- One top channel on each end
- One additional top channel on extended surface on Right

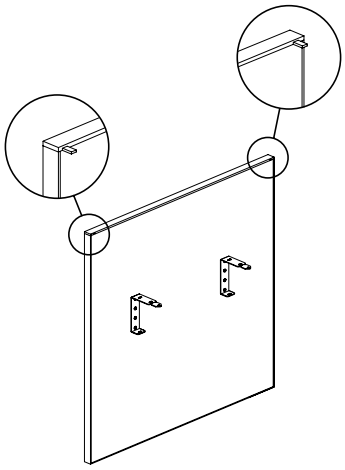

Both Sides (B)
One top channel on each end

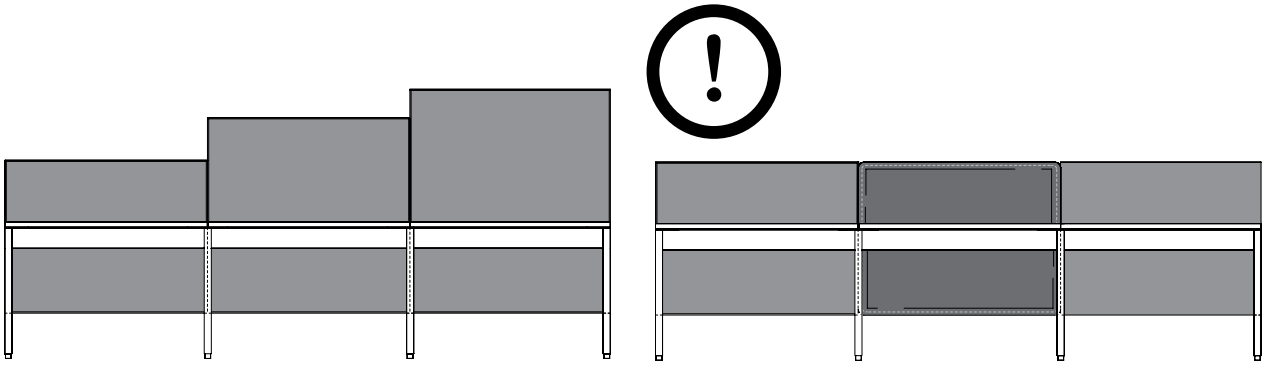

WARNING, screens with different heights or materials **cannot** be linked

leg-mounted screens

leg-mounted screens

UNDERSTANDING LEG-MOUNTED SCREENS 506

ELEVATED SCREEN – LEG-MOUNTED BASICS. 507

UNDERSTANDING LEG-MOUNTING STYLE FOR ELEVATED SCREENS 509

UNDERSTANDING WIDTH EXTENSION FOR CORNER APPLICATION FOR ELEVATED SCREENS – LEG-MOUNTED 510

PLANNING WITH ELEVATED SCREENS – LEG-MOUNTED 511

FLOOR SCREEN – LEG-MOUNTED BASICS 513

UNDERSTANDING LEG-MOUNTING STYLE FOR FLOOR SCREENS . . 515

UNDERSTANDING WIDTH EXTENSION FOR CORNER APPLICATION FOR FLOOR SCREENS – LEG-MOUNTED 517

PLANNING WITH FLOOR SCREENS – LEG-MOUNTED 518

PLANNING WITH FLOOR SCREENS – LEG-MOUNTED – CABLE PASS-THROUGH 520

PLANNING WITH LINKING DEVICE FOR ELEVATED OR FLOOR SCREENS – LEG-MOUNTED. 521

leg-mounted screens (continued)

FLOOR SCREEN WITH METAL TOWERS – LEG-MOUNTED BASICS . . 522

UNDERSTANDING LEG-MOUNTING STYLE FOR FLOOR SCREEN WITH METAL TOWERS 526

UNDERSTANDING WIDTH EXTENSION FOR CORNER APPLICATION FOR FLOOR SCREEN WITH METAL TOWERS – LEG-MOUNTED 527

PLANNING WITH FLOOR SCREEN WITH METAL TOWERS – LEG-MOUNTED 528

DRAWER WIDTHS & LOCK CHART – FLOOR SCREEN WITH METAL TOWERS – LEG-MOUNTED 530

understanding leg-mounted screens

Expansion Cityline offers a variety of leg-mounted screens for space division. They provide user visual and territorial privacy and a lighter aesthetic for both divisional and complementary applications.

Leg-Mounted Screens in this are compatible with EZ Fence Structure. Refer to Planning with EZ Fence and Leg Mounted Screens in EZ Structure section for more details

Alignment of two contiguous screens is enhanced by different devices for Laminate, Fabric and Glass screen materials. Expansion Cityline also allows mixing screen styles and materials in the same workstation given that product dimensioning has been taken into account for that purpose. However, alignment of consecutive screens can only be done within same screen height, style and material

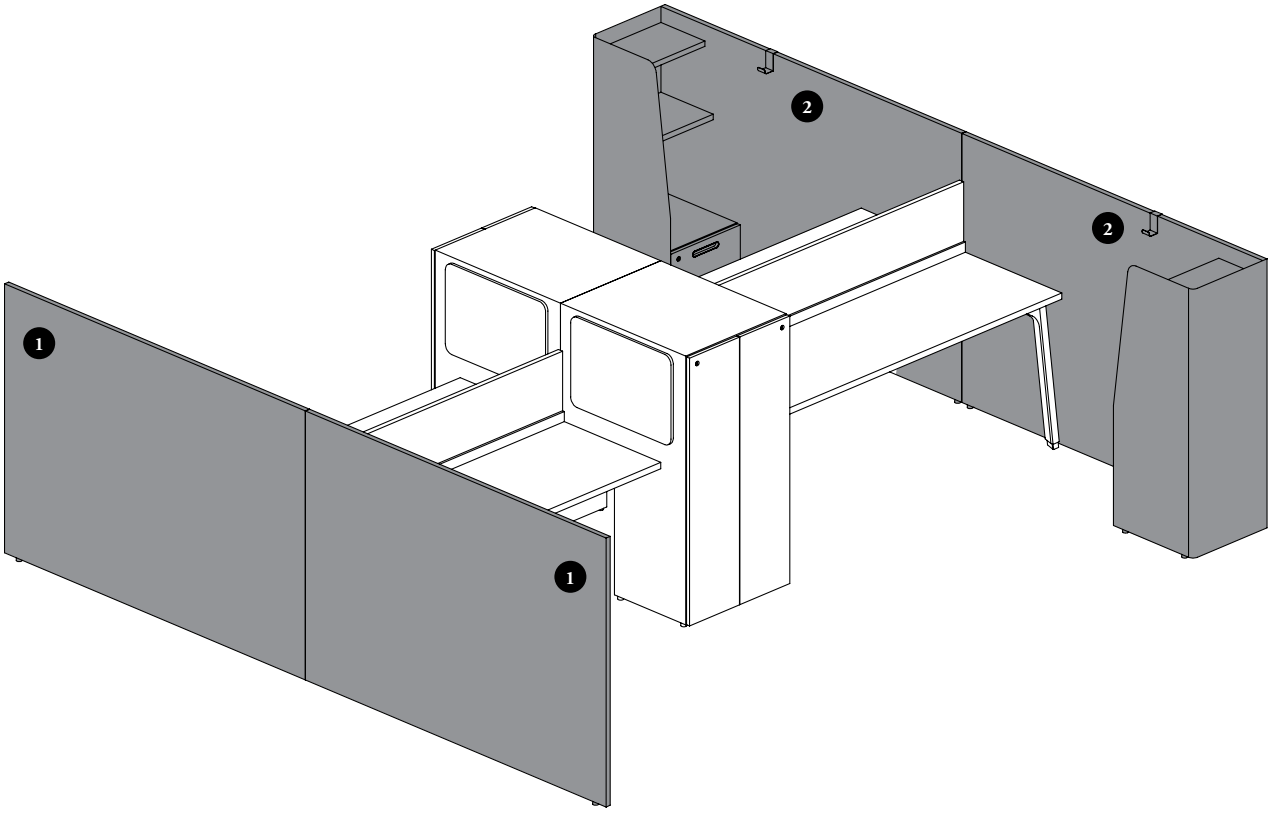

Three main applications:

Elevated Screens – Solid, Glass, Fabric or Felt finishes – Create privacy for one or two users while maintaining a elevated look

1. **Floor Screens –** Solid or Solid with Glass: Provide privacy for one or two users from floor level with optional glass section
2. **Floor Screens with Metal Towers –** Provide privacy from floor and storage functionality for one or two users

elevated screen – leg-mounted basics

The Elevated Screens create privacy and physical separation between workstations or corridor when overlaid on Structural Legs.

- Elevated Screens are offered to match with Teknion standard datum heights of 42", 51" or 57", with some exceptions in glass screens
- Mounts on-module on Single- and Double-Sided Legs. Off-modularity mounting can be done with limitations

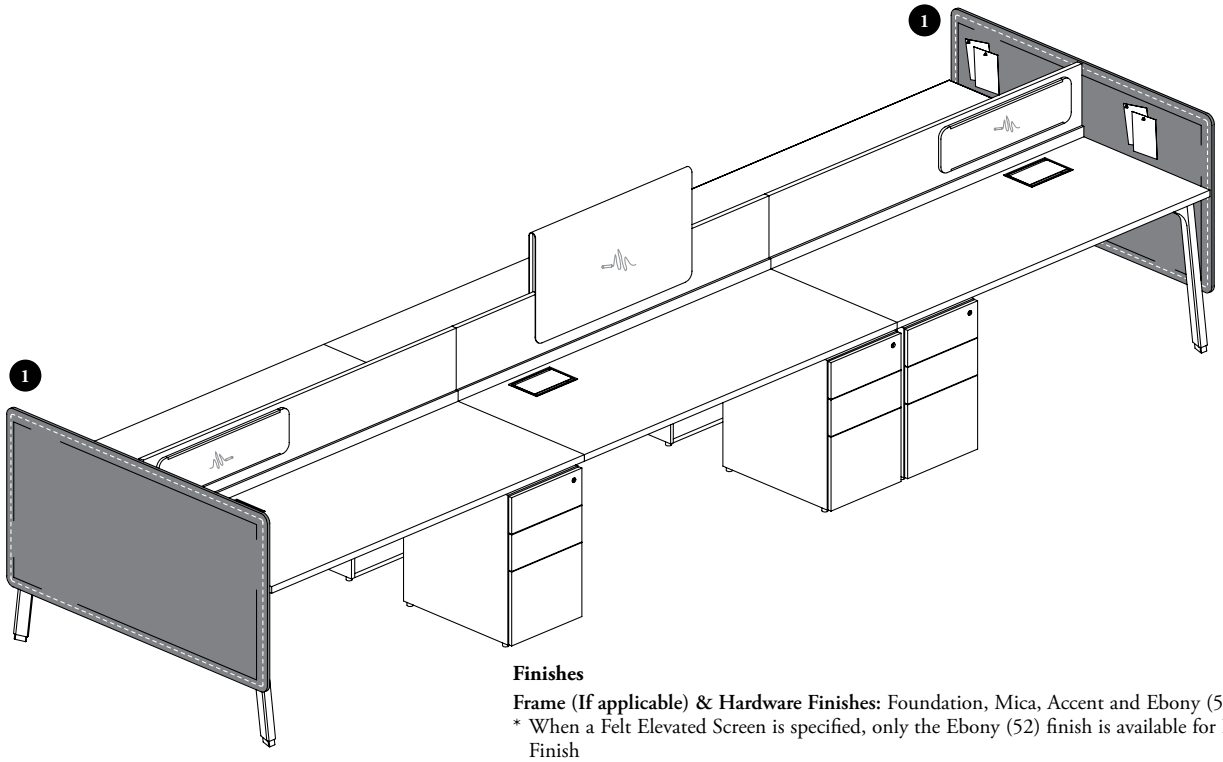

Finishes

Frame (If applicable) & Hardware Finishes: Foundation, Mica, Accent and Ebony (52)*
* When a Felt Elevated Screen is specified, only the Ebony (52) finish is available for Hardware Finish
Solid Finishes: Source Laminate
Glass Finishes: Clear – Low Iron (LA)** or Frost – Low Iron (LB)**
** **Low Iron Glass Finishes** reduce the greenish render of standard glass. Any other Glass Screen installed on the same workstation should also be specified in these finishes
Glass Finish – Modesty Height: Back-Painted
Fabric Finishes: Teknion Standard Panel Fabrics, specified separately for inner and outer sides
Felt Finishes: Loft colors. Two-sided finished products have the same finish on both sides
Stitches Finishes: Carbon Coordinate (C), Shale Coordinate (E), Carrara Coordinate (G) or Umber Coordinate (M)

- Following products provide fabric or felt space division, visual privacy and noise reduction control
- Are tackable on both sides

Fabric Elevated Screen – Leg-Mounted (JNSEFL) EZ compatible

- Inner and outer finishes are specified separately
- Modesty Base Height can be specified 10" from floor (10)
- 42", 51" or 57" high datum is allowed
- Widths include 18" – 36" (6" increments) and 48" – 72" (6" increments)

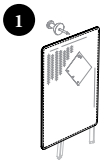

Felt Elevated Screen – Leg-Mounted (JNSEEL) EZ compatible

- Felt Finish is the same on both sides
- Modesty Base Height can be specified 10" from floor (10)
- 42", 51" or 57" high datum is allowed
- Come with Radius Corner Details (R)
- Widths include 18" – 36" (6" increments) and 48" – 72" (6" increments)

elevated screen – leg-mounted basics (continued)

Solid Elevated Screen – Leg-Mounted (JNSESL) EZ compatible

- Available 1" thick and two-sided finished
- Modesty Base Height can be specified 10" from floor (10)
- 42", 51" or 57" high datum are available
- Widths include 18" – 36" (6" increments) and 48" – 72" (6" increments)
- Comes with Standard Corner Details (S)
- Screen ends can be specified With (W) or Without (N) Alignment Holes to allow installation of Linking Devices

grain direction

- The grain direction on Laminate Solid Screens is **not** directional and always runs horizontal
- On Cathedral Grain the pattern may appear on opposite direction on side by side screen panel

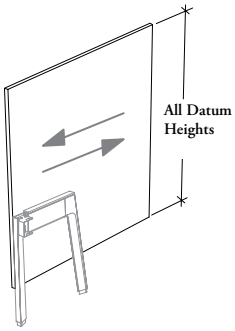

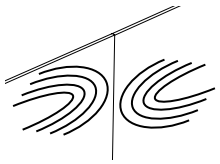

Glass Elevated Screen – Leg-Mounted (JNSEGL)

- Available with a 1/4" (6 mm) thick tempered Low Iron glass
- Low Iron Glass Finishes reduce the greenish render of standard glass. Any other Glass Screen installed on the same workstation should also be specified in these finishes
- Lower portion is back-painted in order to hide structures and brackets
- Modesty Base Height can be specified 10" from floor (10)
- 42" or 51" high datum are available
- Widths include 18" – 36" (6" increments) and 48" or 60" (12" increments)
- Come with Standard Corner Details (S)
- Linking Strip for Glass Screen **cannot** be installed on this product. **Not** compatible with any EZ Support

base height

- 10" above floor, will block power access on wall
- The bottom of the Elevated Screens aligns with the following products:

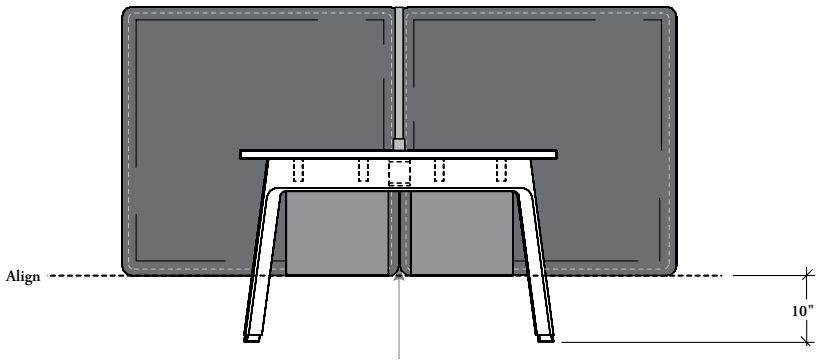

Aligns with Felt Corner Elevated Screen (JNSECF), Suspended Pedestal/Cubby, Suspended or Semi-Suspended Credenzas, Suspended Shelf (JNBSH) or Beam-Mounted Modesty Panel (JNABMS)

understanding leg-mounting style for elevated screens

Understanding the different leg-mounting styles is key in specifying appropriate Elevated Screens – Leg-Mounted.

- Leg mounting hardware is included
- Off-modularity is allowed under certain conditions. Refer to page 511 for details
- **Cannot** mount on Structural Legs when used in Low Height Fence application

single-sided leg-mounted configuration

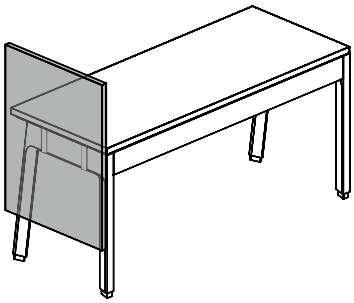

Left (L) or Right (R) (Shown) Application

- Two configurations are available with Single-Sided Leg-Mounted style:
  - Left (L)
  - Right (R) (Shown)
- Left/Right configuration is determined from the users perpective
- Left or Right configuration can only be used with:
  - Single-Sided Structural Legs – End Position (JNDLS) (Shown)
  - Structural Post with Front Leg – End Position (JNDPF)
  - Single-Sided Freestanding Leg (JNALS) with worksurface
  - Single-Sided EZ Structural Leg (JZSLS)

double-sided leg-mounted configuration

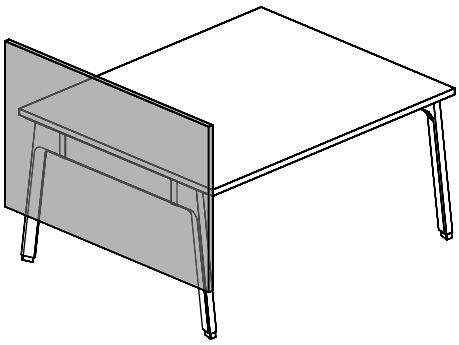

Double-Sided Overlay (D) Application

- Only Double-Sided Leg Overlay (D) configuration are available with Double-Sided Leg-Mounted style
- Double-Sided Leg Overlay configuration can only be used with:
  - Double-Sided Structural Leg – End Position (JNDLD) (Shown)
  - Double-Sided Freestanding Leg – End Position (JNALD) with worksurface
  - EZ Fence Leg (JZSFS)
  - Double-Sided EZ Structural Leg (JZSLD)

The following supports are **not** applicable for leg-mounted with support connection configurations:

- Structural Legs – Fence/Beam-Mounted Cabinet/Peninsula (JNDLF, JNDLL, JNDLP)
- Freestanding Legs – Lateral Cabinet/Peninsula (JNALL, JNALP)
- Peninsula Monopod Base – Round (JNAPP)
- Bevel Base on Run-Off (JNHB)
- All 28" high Freestanding Storage

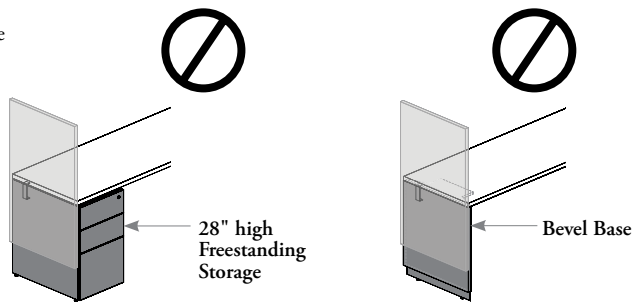

understanding width extension for corner application for elevated screens – leg-mounted

The following should considered when specifying with Floor Screens – Leg-Mounted.

- Width Extension Leg-Mounted will allow closing 90° corners with a Beam- or Worksurface-Mounted Elevated Screen. For more details, refer on Beam- or Worksurface-Mounted Elevated Screens section
- Width extension for each material is related to its thickness and differ from one another
- Appropriate specification of this option will allow closing 90° corners made with screens of same material
- Screens of different materials can be installed on same workstation but **cannot** be linked. Width Extension for Corner Application should be specified Standard Width in these applications and corners **cannot** be closed
- Width extension are **not** offered on Felt Screen, a Felt Corner Elevated Screen is offered and may be used in some applications. Refer to page 479 for details
- The screen dimensions are **not** all available with Width Extension for Corner Application option; see individual product page for details

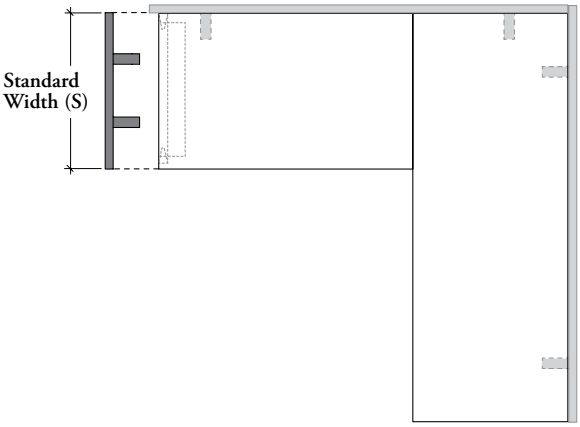

Standard Width (S)

- Both ends of screen come flush with what it is mounted to
- Can only be specified with:
  - Solid Elevated Screen – Leg-Mounted (JNSESL) (Shown)
  - Glass Elevated Screen – Leg-Mounted (JNSEGL)
  - Fabric Elevated Screen – Leg-Mounted (JNSEFL)
  - Felt Elevated Screen – Leg-Mounted (JNSEEL)

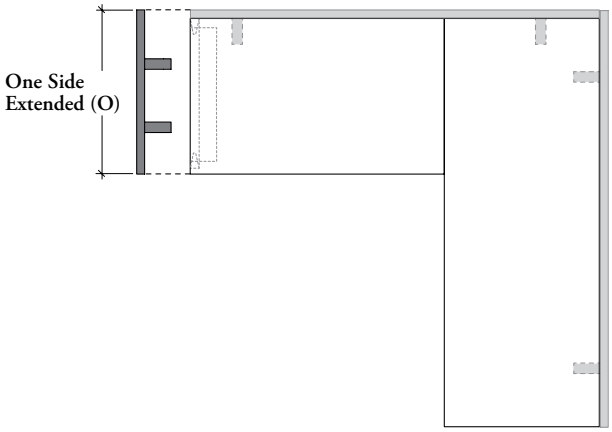

One Side Extended (O)

- Width extension can only be specified on the back end of Single-Sided Legs. As Legs are already handed, there is no need to specify an orientation
- Can only be specified with:
  - Solid Elevated Screen – Leg-Mounted (JNSESL) (Shown)
  - Glass Elevated Screen – Leg-Mounted (JNSEGL)
  - Fabric Elevated Screen – Leg-Mounted (JNSEFL)

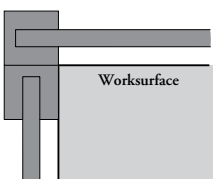

90° corners with glass screens are closed at mounting extrusion height only

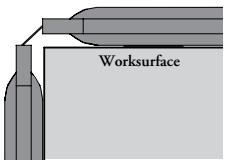

90° corners with felt screens **cannot** be closed, see Felt Corner Elevated Screen on page 479 for an alternative

planning with elevated screens – leg-mounted

Elevated Screens – Leg-Mounted provide space division and various levels of privacy. The following should be considered when planning with Elevated Screens – Leg-Mounted.

When mounted on Leg only, an Elevated Screen – Leg-Mounted must be specified

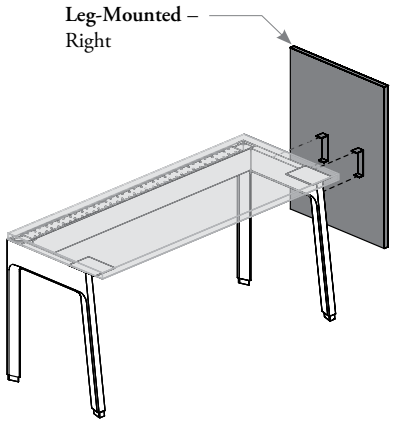

on-module applications

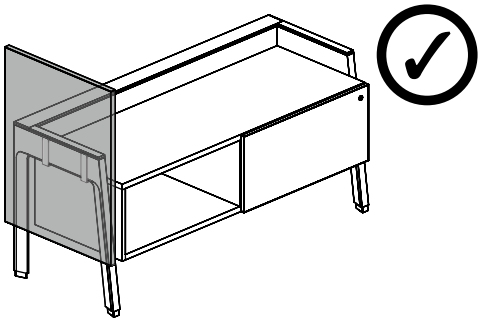

Exposed Legs and Leg-Mounted Application

- Glass Elevated Screen **cannot** be mounted on Leg with Top Cover
- Other material screens can be mounted
- Can also be used in freewing application

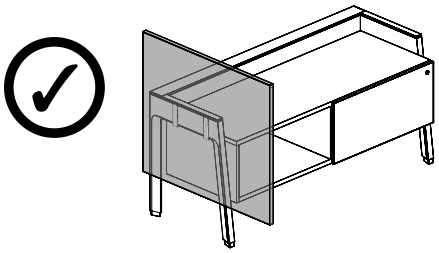

off-module applications

Leg-Mounted concealed underneath a worksurface Application

- Glass Elevated Screens can only be mounted on-module on Legs that are concealed underneath a worksurface
- Other materials screens can be mounted on- and off-module when the screen is justified with rear end of single-sided legs or with the center of double sided-legs
- Freewing applications require a minimum desk width of 42" and at least one of the following conditions:
  – a full-width screen is mounted on the back of the desk
  – the back of the desk is placed againts a wall
  – the desk is completed with a return

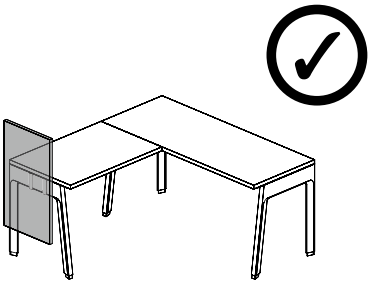

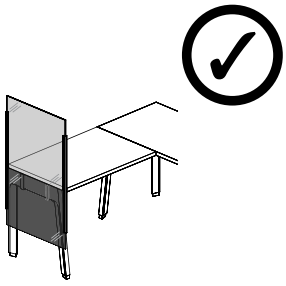

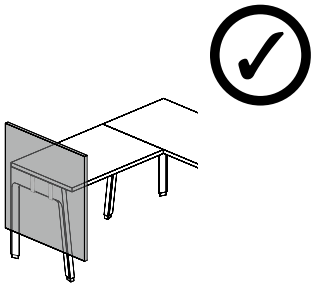

planning with elevated screens – leg-mounted (continued)

off-module applications (continued)

Exposed End Structutral Legs Application

- When planning with exposed Structural Leg – End, each leg must remain strong and square to the Structural Beam. Refer to page 243 of the Desk Structures section for details. **Not** required with EZ Fence Structure
- An Elevated Screen – Leg-Mounted can be installed on the following supports:
  - 18" or 24" deep Single-Sided Structural Legs – End-Left or/and Right (JNDLS_L/R)
  - 36" or 48" deep Double-Sided Structural Legs – End (JNDLS_E)
  - 18" or 24" deep Single-Sided EZ Structural Legs – End-Left or/and Right (JZSLS_L/R)
  - 36" or 48" deep Double-Sided EZ Structural Legs – End (JZSLD_E)
  - 20" deep EZ Fence Legs – End (JNSFS_E)
- 18" to 36" wide Elevated Screens can be installed on Single-Sided Structural Leg
- 36" to 72" wide Elevated Screens can be installed on Double-Sided Structural Leg
- Can be specified with Solid, Fabric or Felt Elevated Screen – Leg-Mounted. **Not** allowed with half back Painted Glass

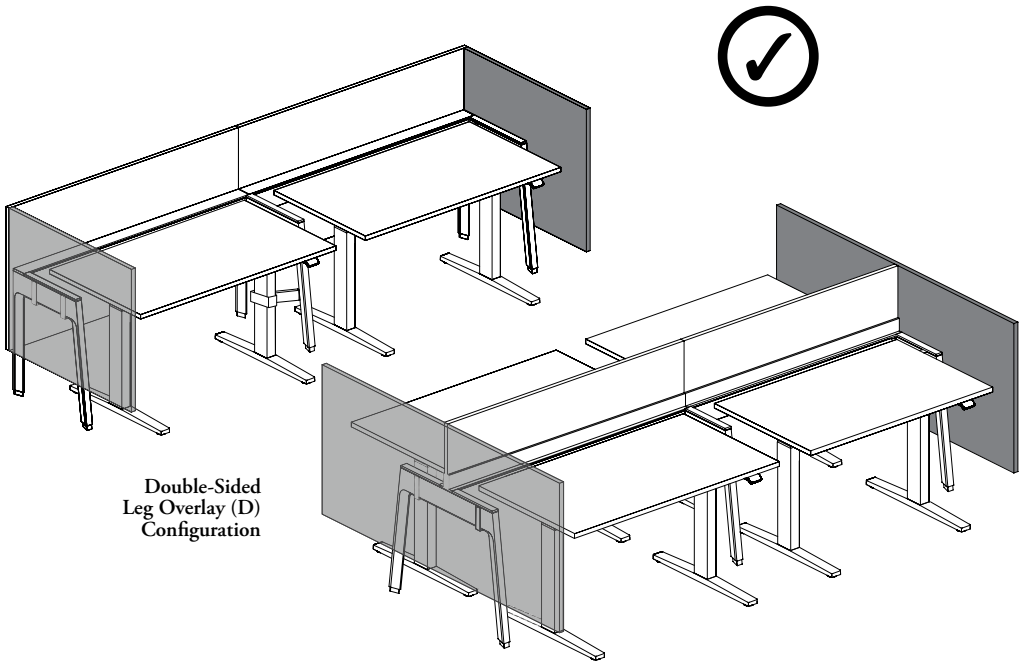

Left (L) and Right (R) Configuration

Double-Sided Leg Overlay (D) Configuration

floor screen – leg-mounted basics

The Floor Screens – Leg-Mounted create privacy and physical separation between workstation or the corridor when overlay on a Structural Leg.

- Floor Screens are offered to match with Teknion standard datum heights of 42", 51" or 57"
- 5/8" above the floor for complete enclosure
- Leveling range of 3"
- Two application styles are available: One or Two Users
- Mounts on-module on Single- and Double-Sided Legs. Off-modularity mounting can be done with limitations

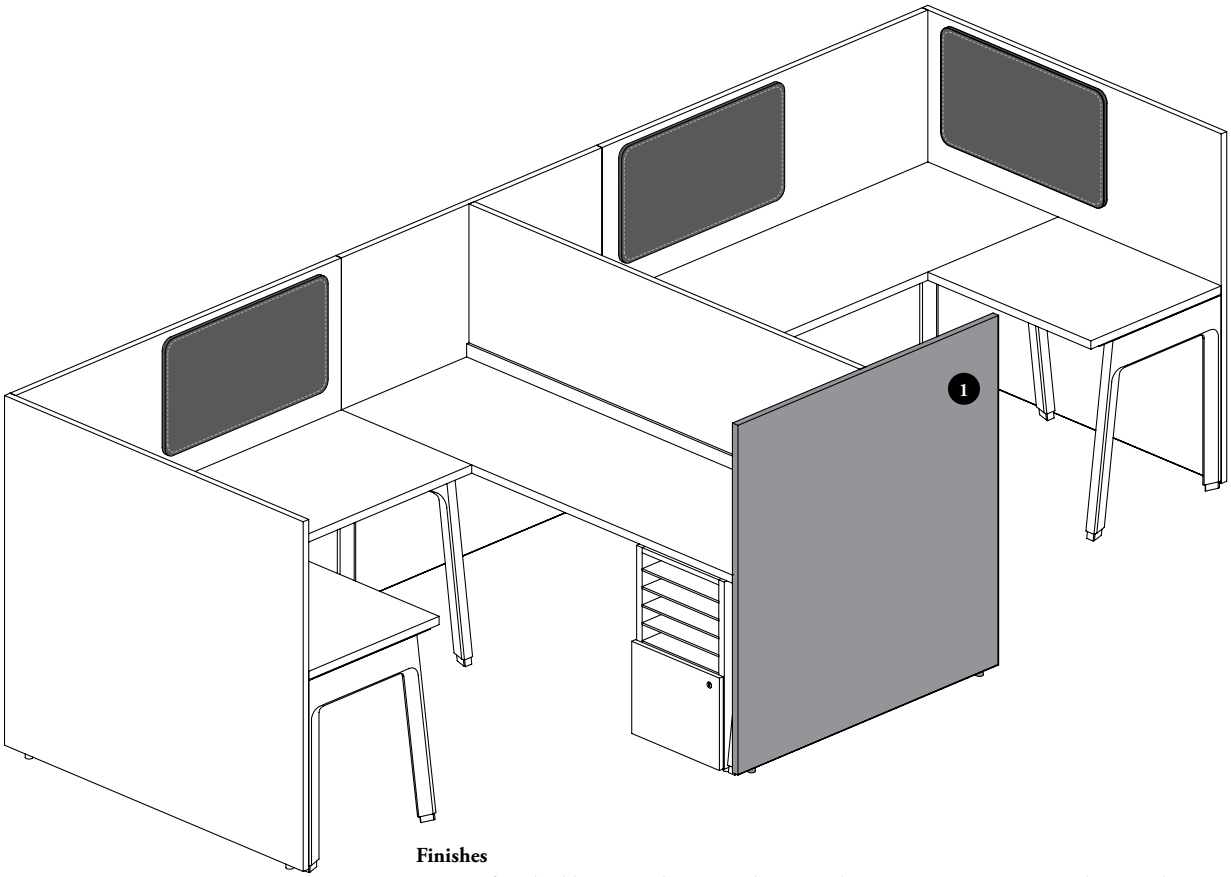

Finishes

Frame (If applicable) & Hardware Finishes: Foundation, Mica, Accent or Coordinate Colors*

* **Coordinate Colors** are solid colors that can be used to match wood print: Royal Cherry (M8), Ivory Birch (NB), Provincial Oak (NC), Coastal Elm (ND), Espresso Reflect (Q4), Stainless (Q6), Walnut Cathedralgrain (Q7), Mercurial Walnut (Q9), Java Walnut (R7), Urban Walnut (R8), Choice Maple (R9), Estate Cherry (V1), Campus Oak (VD), Flax Reflect (VL), Pecan Reflect (VV), Cocoa Brown Reflect (W8) and Sycamore Reflect (W9)

Screen Finish: Source Laminate

Glass Finishes: Clear (CL), Frost, (FT), Satin (FB), Clear – Low Iron (LA)** or Frost – Low Iron (LB)**

** **Low Iron Glass Finishes** reduce the greenish render of standard glass. They should be specified anytime this product is installed on the same workstation than a Glass Elevated Screen

Pass-Through Ring Finish: Platinum Coordinate

floor screen – leg-mounted basics (continued)

- 42", 51" or 57" high visual screen that provides privacy to floor level
- Does **not** provide support to the worksurface
- Comes with Standard (S) (Shown) or Radius (R) Corner Details
- Can be specified Standard-Height Pass-Through (S) or No Pass-Through (N)

18" to 84" w

Solid Floor Screen – Leg-Mounted – One User (JNSFSL)

- Widths include 18" – 84" (6" increments)
- Screen ends can be specified With (W) or Without (N) Alignment Holes to allow installation of Linking Devices
- Available 1" thick and two-sided finished

1 **36" to 84" w** **96" to 168" w**

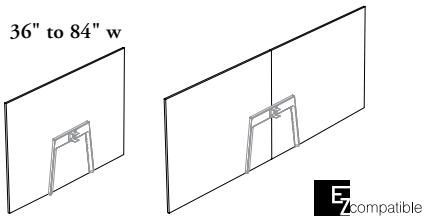

Solid Floor Screen – Leg-Mounted – Two Users (JNSFST)

- Widths include 36" – 168" (12" increments)

grain direction

- The grain direction on Laminate Solid Screens is **not** directional and always runs horizontal
- On Cathedral Grain the pattern may appear on opposite direction on side by side screen panel

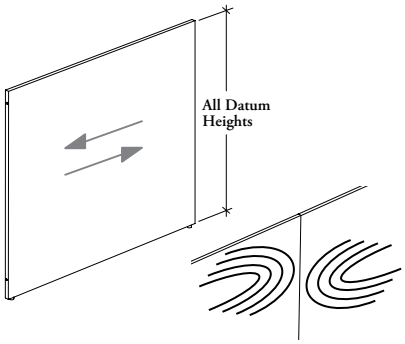

18" to 84" w

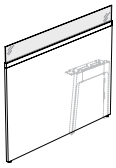

Glass Floor Screen – Leg-Mounted – One User (JNSFGO)

- Widths include 18" – 84" (6" increments)
- Solid portion of screen ends can be specified With (W) or Without (N) Alignment Holes to allow installation of Linking Devices

36" to 84" w **96" to 168" w**

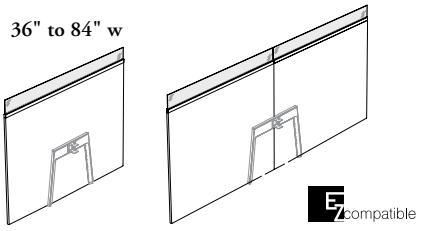

Glass Floor Screen – Leg-Mounted – Two Users (JNSFGT)

- Widths include 36" – 168" (12" increments)
- Available with a 1/4" (6 mm) thick tempered glass on top
- Low Iron Glass Finishes reduce the greenish render of standard glass. They should be specified anytime this product is installed on the same workstation than a Glass Elevated Screen
- 28", 29" or 42" glass starting high are available

radius corners

When Radius Corners (R) are specified, only the corners toward the user will have a radius. Radius are **not** recommended when floor screen is specified the width than the leg, this will reveal the extremity of the leg

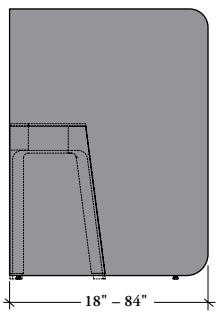

Floor Screen – Leg-Mounted – One User
Configuration Left (L) (Shown) or Right (R)

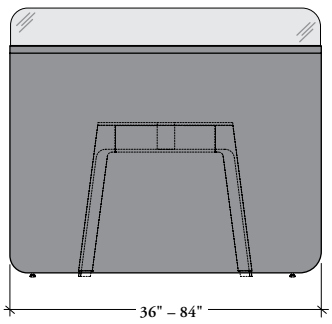

Floor Screen – Leg-Mounted – Two Users

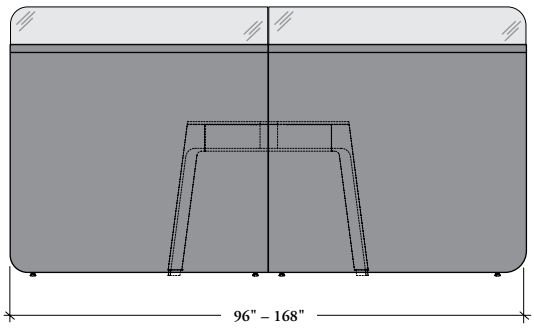

understanding leg-mounting style for floor screens

Understanding the different leg-mounting styles is key in specifying appropriate Floor Screens – Leg-Mounted.

- Leg or storage mounting hardware is included for respective installation
- Off-modularity and freewing applications are allowed under certain conditions. Refer to page 496 for details

single-sided leg-mounted configuration – one user

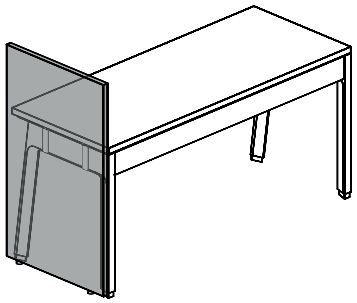

Left (L) or Right (R) (Shown) Application
18" to 84" widths – One piece Screen

- Two configurations are available with Single-Sided Leg-Mounted – One User style:
  - – Left (L)
  - – Right (R) (Shown)
- Left/Right configuration is determined from the users perpective
- Left or Right configuration can only be used with:
  - – Single-Sided Structural Leg – End Position (JNDLS) (Shown)
  - – Structural Post with Front Leg – End Position (JNDPF)
  - – Single-Sided Freestanding Leg (JNALS) with worksurface
  - – All 28" high Freestanding Storage with worksurface
  - – Single-Sided EZ Structural Leg (JZSLS)

The following supports are **not** applicable for leg-mounted configuration:

– Structural Legs – Fence/Beam-Mounted Cabinet/Peninsula (JNDLF, JNDLL, JNDLP)
– Freestanding Legs – Lateral Cabinet/Peninsula (JNALL, JNALP)
– Peninsula Monopod Base – Round (JNAPP)
– Bevel Base on Run-Off (JNHB) (also applicable with worksurface-mounted)

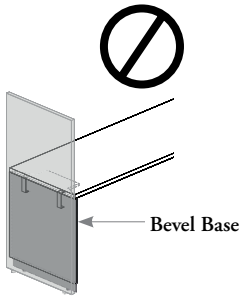

understanding leg-mounting style for floor screens (continued)

double-sided leg-mounted configuration – two users

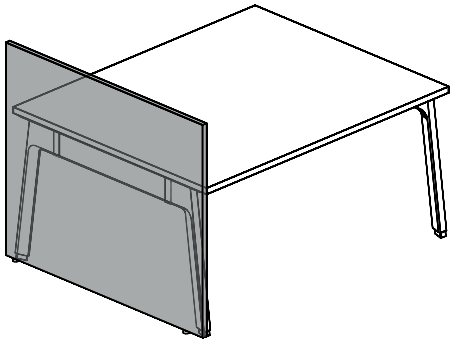

36" to 84" widths – One Piece Screen

- Available with Double-Sided Leg-Mounted – Two Users style
- Can only be used with:
  - Double-Sided Structural Leg – End Position (JNDLD) (Shown)
  - Double-Sided Freestanding Leg – End Position (JNALD) with worksurface
  - Back-to-back 28" high Freestanding Storage with worksurface
  - Double-Sided EZ Structural Leg (JZSLD)
  - EZ Fence Leg – Standard Height (JZSFS)

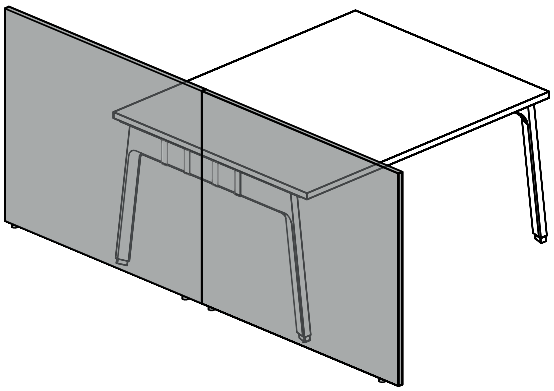

96" to 168" widths – Two Pieces Screens

- Off-modularity application is **not** possible, the extension dimension must be the same on both sides
- Two pieces Floor Screens are connected with Linking Device and a shared bracket
- Can only be used with:
  - Double-Sided Structural Leg – End Position (JNDLD) (Shown)
  - Double-Sided Freestanding Leg – End Position (JNALD) with worksurface
  - Double-Sided EZ Structural Leg (JZSLD)
  - EZ Fence Leg – Standard Height (JZSFS)

understanding width extension for corner application for floor screens – leg-mounted

The following should considered when specifying with Floor Screens – Leg-Mounted.

- Width Extension Leg-Mounted will allow closing 90° corners with a Beam- or Worksurface-Mounted Floor Screen. For more details, refer on Beam- or Worksurface-Mounted Floor Screens section
- Width extension for each material is related to its thickness and differ from one another
- Appropriate specification of this option will allow closing 90° corners made with screens of same material
- Screens of different materials can be installed on same workstation but **cannot** be linked. Width Extension for Corner Application should be specified Standard Width in these applications and corners **cannot** be closed
- The width dimensions are **not** all available with Width Extension for Corner Application option; see individual product page for details
- The Width Extension for Corner Application is **not** available with Two Users styles

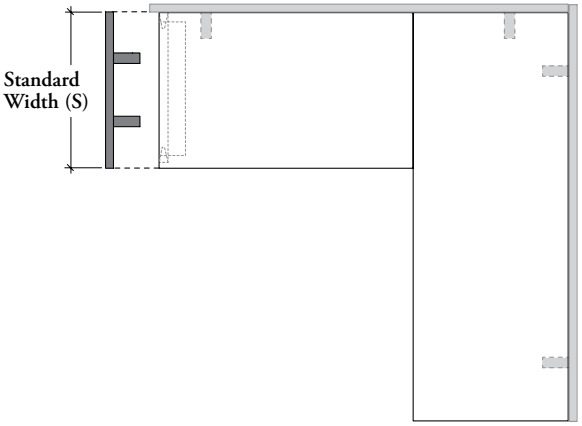

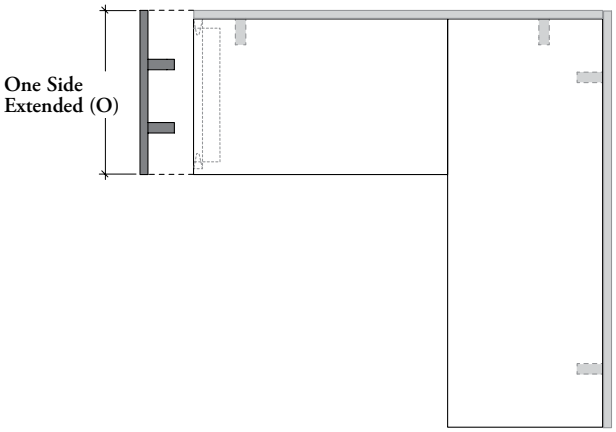

Standard Width (S)

- Both ends of screen come flush with what it is mounted to
- Can only be specified with:
  - Solid Floor Screen – Leg-Mounted – One User (JNSFSL) (Shown)
  - Solid with Glass Floor Screen – Leg-Mounted – One User (JNSFGO)

One Side Extended (O)

- Width extension can only be specified on the back end of Single-Sided Legs. As Legs are already handed, there is no need to specify an orientation
- Can only be specified with:
  - Solid Floor Screen – Leg-Mounted – One User (JNSFSL) (Shown)
  - Solid with Glass Floor Screen – Leg-Mounted – One User (JNSFGO)

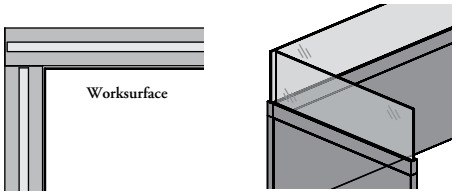

Corners made from two Floor Screens with Glass will be closed on the solid portion only

planning with floor screens – leg-mounted

Floor Screens – Leg-Mounted provide space division and various levels of privacy. The following should be considered when planning with Floor Screens – Leg-Mounted.

When mounted on Leg only, a Floor Screen – Leg-Mounted must be specified

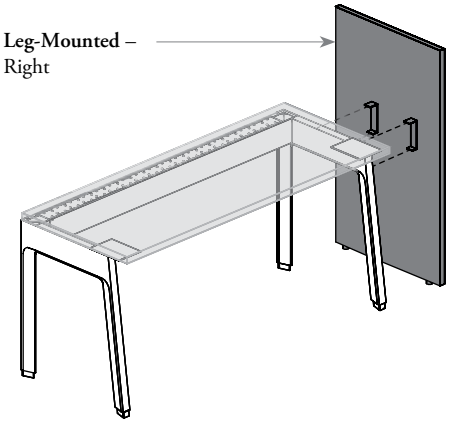

- Leg-Mounted can be used in freewing applications providing extended territorial division
- Can be used under certain conditions on Single- and/or Double-Sided Workstation
- Floor Screens used in freewing applications need to be mounted on a Structural Leg. Freestanding supports **cannot** be used for extended screen applications
- Freewing applications require a minimum desk width of 42"

with single-sided workstation – freewing application

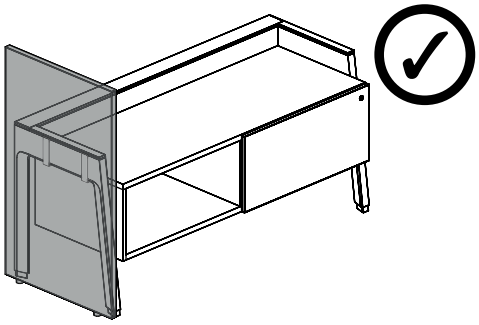

Exposed Legs and One User Leg-Mounted Floor Screen Application

Floor Screens can be mounted on-module or in extended freewing applications when mounted on Legs with Top Cover shorter screens are **not** allowed

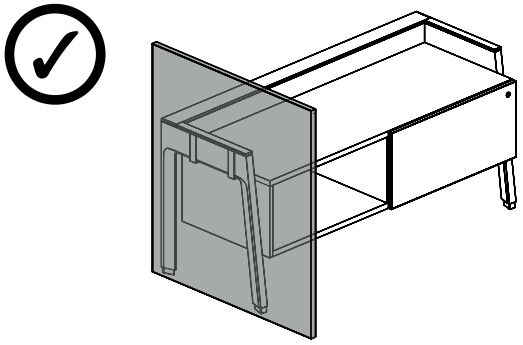

planning with floor screens – leg-mounted (continued)

with double-sided workstation – freewing application

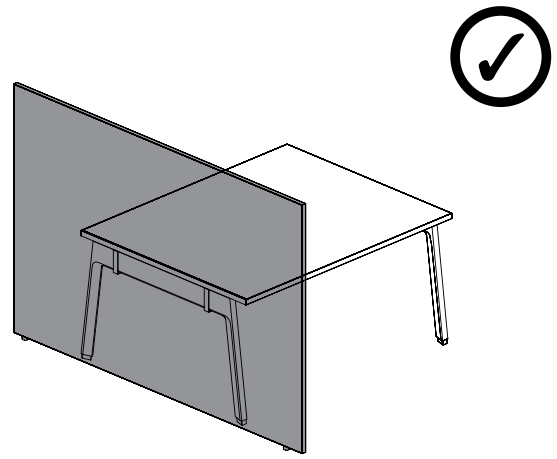

Two Users Leg-Mounted Floor Screen centered with Double-Sided Structural Legs – End Option

- A Floor Screen can be mounted centered with 48" or 60" deep double-sided structural supports only. The extension dimension must be the same on both sides
- The two users screen leg-mounted is in one piece from 36" to 84" and must be centered on the double-sided structural leg

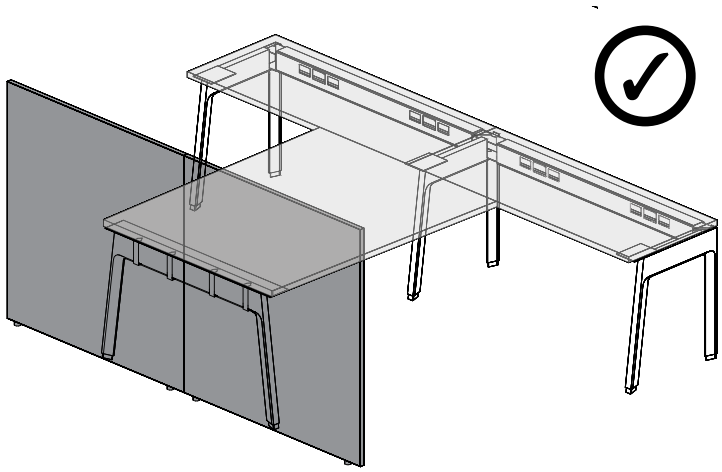

Two Users Leg-Mounted Floor Screens justified with the center of Double-Sided Structural Legs – End Option

The two users screen leg-mounted is in two pieces from 96" to 168" and must be centered on the structural leg

with freestanding leg – freewing application

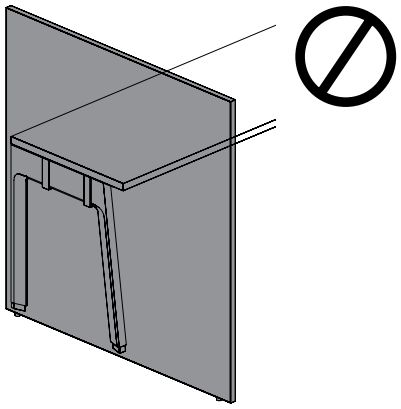

Leg-Mounted Application with Freestanding Legs

- Floor Screens **cannot** exceed a Freestanding Structural Leg
- Floor Screens with Metal Towers can exceed a Freestanding Leg since the tower provides stability to the screen

planning with floor screens – leg-mounted – cable pass-through

Information on this page should be considered when planning with Cable Pass-Through on Floor Screens or Floor Screens with Metal Towers – Leg-Mounted.

- Provide openings for electrical wiring and communication cables
- Can be specified with factory-made cable pass-through cut-outs
- Pass-Through cut-out is positioned to allow the cables to be directed in the structural beam for integrated management. Specifying this option on a screen mounted to a freestanding support also means there will be no wire management channel supplied with the worksurface no Pass-Through option on the gable

- Metal Cable Pass-Through Covers (JNEGPC) can be specified separately
- Two Cable Pass-Through options are available:
  - No Pass-Through (N)
  - Standard-Height Pass-Through (S)

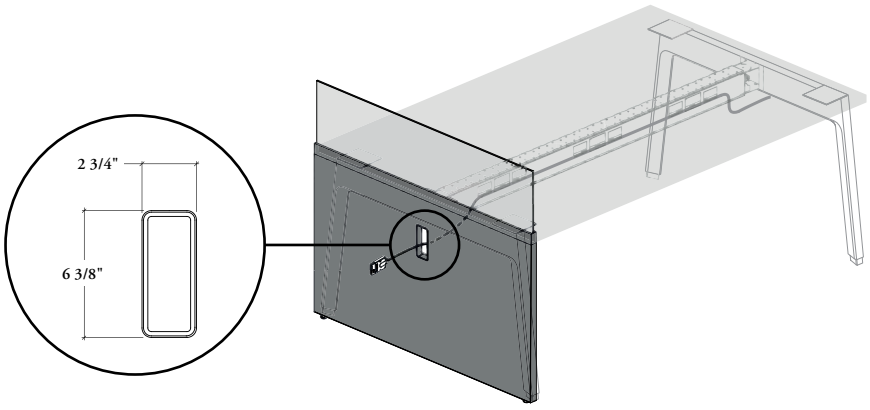

Pass-Through position on Floor Screens is related to structural beam and Leg design:

Leg-Mounted Screen on Single-Sided Structural Legs or Freestanding Legs – End Position

Cut-out on single-sided Screen will be at the best position for directing the cables in the structural beam.

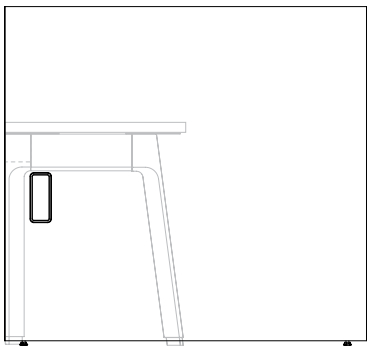

Leg-Mounted Screen on Double-Sided Structural Legs or Freestanding Legs – End Position

Double-Sided Leg Overlay Screens can be specified with a centered cut-out which allows directing cables in the structural beam. When used with Freestanding Legs, it should be to run plug-in power bar or personal equipment cords only.

One panel piece with 36" to 84" wide Floor Screen – Leg-Mounted Two Users

One piece Floor Screen comes with a center cut-out for the cable pass-through.

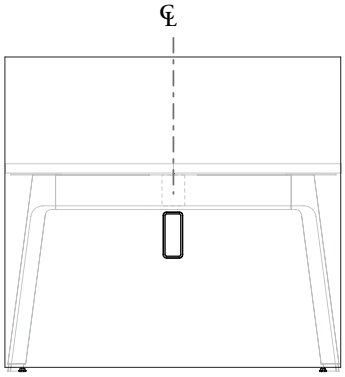

Two panel pieces with 96" to 168" wide Floor Screen – Leg-Mounted Two Users

- Cut-out is off center to be place on one or two panel pieces
- Cut-Out will always be on the right panel from the outside of the workstation.

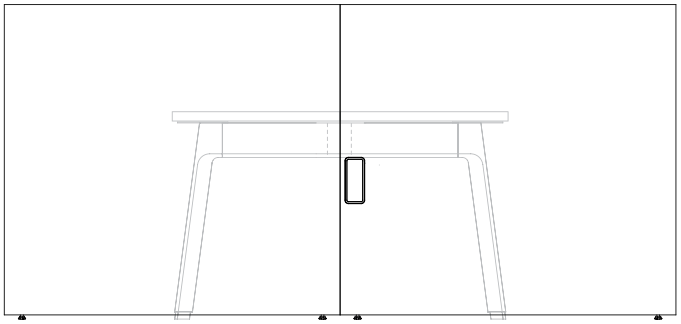

planning with linking device for elevated or floor screens – leg-mounted

Information on this page should be considered when planning with Alignment Holes on Elevated or Floor Screens – Leg-Mounted.

For more details on Linking Devices products, refer to the Planning Linking Devices on page 499

alignment holes positions

Alignment Holes option is **not** available with Floor Screens – Leg-Mounted – Two Users (JNSFST or JNSFGT), but when wider than 84" the two pieces will come with alignment holes to link them together

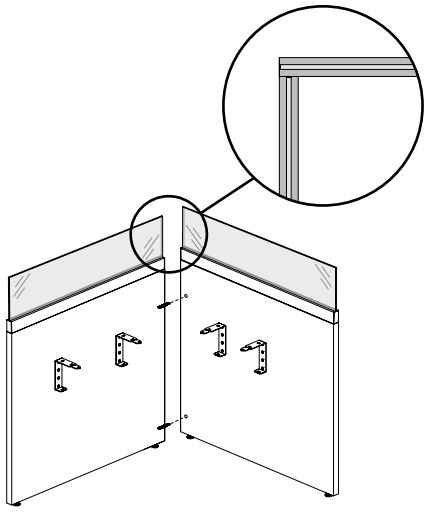

90° Connection

With Solid Elevated, Floor Screen or Floor Screen with Glass (solid section only) Application

- Two 90° connections are available. Depending on the width extension of each screen, you will see the tickness of one of the two panels. Check your layout of workstation to see which way best in your application and choose the appropriate alignment hole positions to match it
- An Elevated or a Floor Screen – Leg-Mounted and an Elevated or a Floor Screen – Beam- or Worksurface-Mounted can be specified to create a 90° connection. Refer on page 500, for Alignment Hole Positions for Elevated or Floor Screens Beam- or Worksurface-Mounted. The glass portion **cannot** be linked
- The Alignment Holes position are related to the Width Extension for Corner Application option and is established like the following:

alignment hole positions

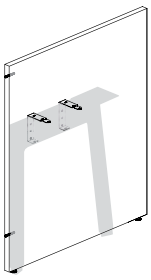

Standard Width (S) and Left (L) Configuration
Two holes on left side edge

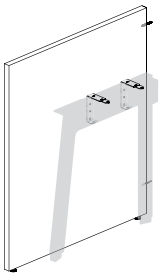

Standard Width (S) and Right (R) Configuration
Two holes on right side edge

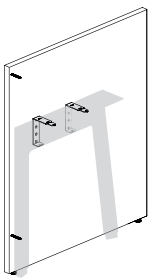

One Side Extended (O) and Left (L) Configuration
Two holes on extended surface on left

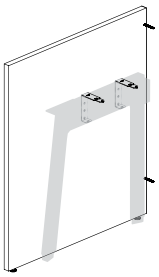

One Side Extended (O) and Right (R) Configuration
Two holes on extended surface on right

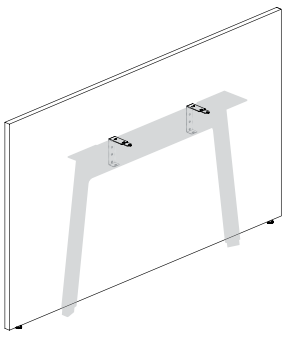

Double-Sided Leg Overlay (D)
No holes

floor screen with metal tower – leg-mounted basics

The Floor Screen with Metal Towers – Leg-Mounted – One or Two Users create privacy and physical separation between workstation or the corridor and also provide personal storage space within the workstation.

- Floor Screen with Metal Towers are offered to match with Teknion standard datum heights of 51" or 57"
- 5/8" above the floor for complete enclosure
- Leveling range of 3"
- Two application styles are available: One or Two Users
- Can be specified with Cable Pass-Through, refer to Planning with Floor Screens – Leg-Mounted – Cable Pass-Through
- Can be specified with Aligment Holes, refer to Planning with Linking Device for Elevated or Floor Screens – Leg-Mounted

for one user

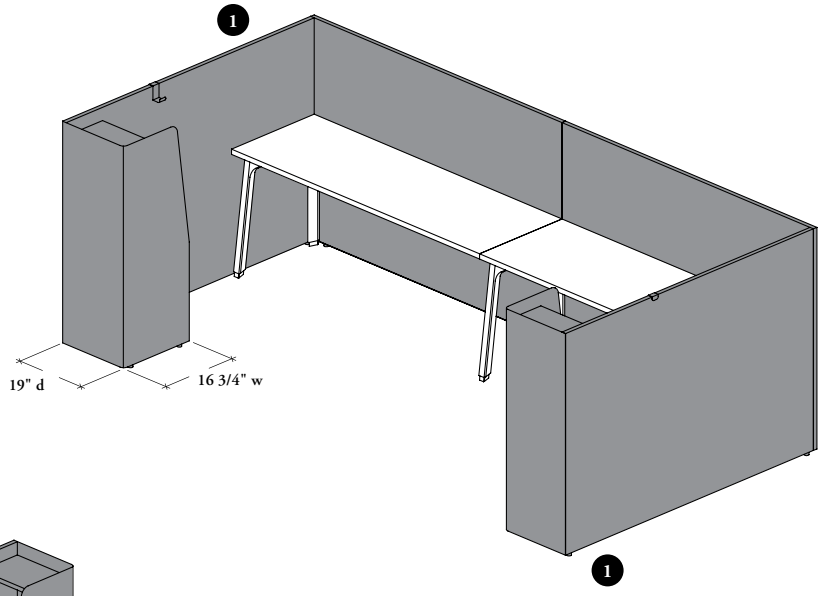

for two users

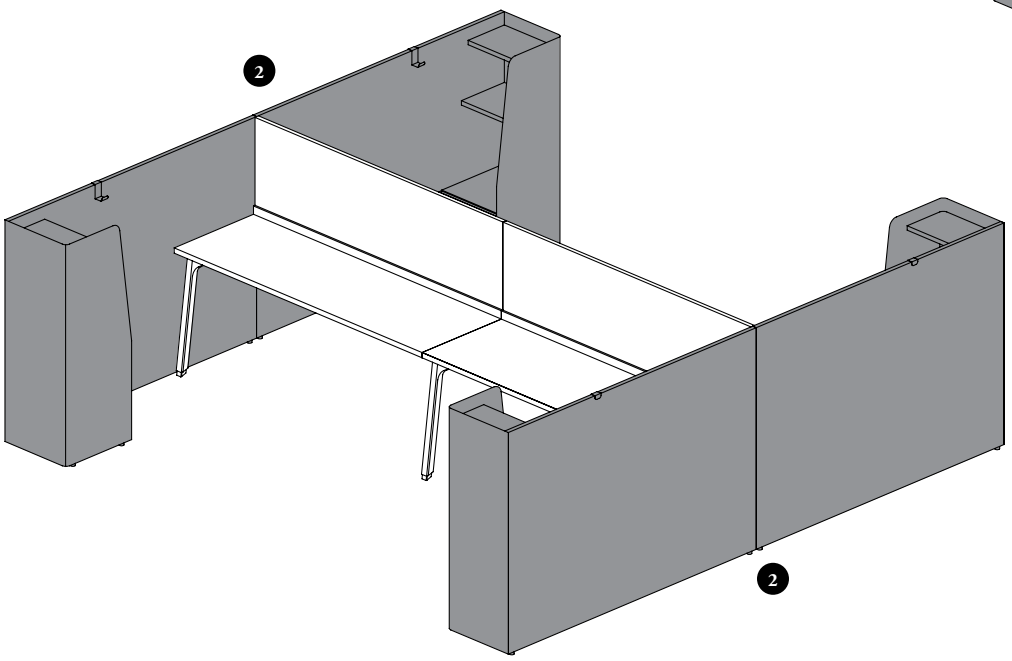

Finishes

Screen Finish: Source Laminate*
*Drawer Front Finish is the same of the Screen Finish
Pull (If applicable), Hook, Leg-Mounting Hardware & Metal Tower Finishes : Foundation, Mica or Accent
Pass-Through Ring Finish: Platinum Coordinate

floor screen with metal tower – leg-mounted basics (continued)

one user style

- 51" or 57" high visual screen that provides privacy to floor level
- 1" thick panel including laminate storage and shelves integrated in a metal tower
- Available in Left or Right (Shown) Configuration
- Widths include 66" – 84" (6" increments)
- Screen ends can be specified With (W) or Without (N) Alignment Holes to allow installation of Linking Devices
- Can be specified Standard-Height Pass-Through (S) or No Pass-Through (N)
- Does **not** provide support to the worksurface
- Include a storage, two fixed shelves and a hook. Hook can be moved along the top of the laminate screen
- Can be used with single-sided legs

1

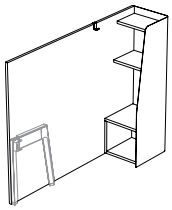

Floor Screen with Metal Tower – Open – Leg-Mounted – One User (JNSFOL) E7 compatible

Tower includes 16 3/8" high open storage

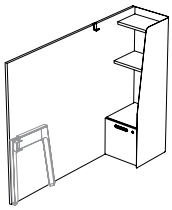

Floor Screen with Metal Tower – One Drawer – Leg-Mounted – One User (JNSFDL) E7 compatible

- Tower includes 16 3/8" high drawer storage
- Only Solid with Pull (T) Front Style can be specified
- Comes with Cityline Recessed (C) Pull Style
- Two Storage Configurations are available:
  - File Drawer (F)
  - Recycling/Waste Bin (R)
- Only File Drawer (F) Storage Configuration is lockable

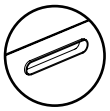

Cityline Recessed (C)

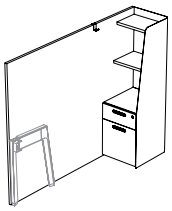

Floor Screen with Metal Tower – Two Drawers – Leg-Mounted – One User (JNSFTL) E7 compatible

- Tower includes 23" high drawer storage
- Only Solid with Pull (T) Front Style can be specified
- Comes with Cityline Recessed (C) Pull Style
- Includes a Box Drawer on Upper Storage. Two Lower Storage Configurations can be specified:
  - File Drawer (F)
  - Recycling/Waste Bin (R)
- When the lower storage configuration is Recycling/Waste Bin (R), only the box drawer can be lockable

floor screen with metal tower – leg-mounted basics (continued)

- 51" or 57" high visual screen that provides privacy to floor level
- Two panel pieces with 1" thick and two-sided finished, and two metal towers with integrated storage attach at both ends
- Widths include 132" – 168" (12" increments)
- Can be specified Standard-Height Pass-Through (S) or No Pass-Through (N)
- Does **not** provide support to the worksurface
- Include a storage, two fixed shelves and an hook for each user. Hook can be moved along top screen
- To be used in shared application double-sided legs or EZ Fence Legs

❷

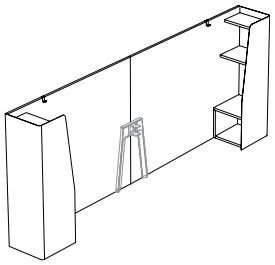

Floor Screen with Metal Tower – Open – Leg-Mounted – Two Users (JNSFOT)

EZ compatible

Towers include 16 3/8" high open storage

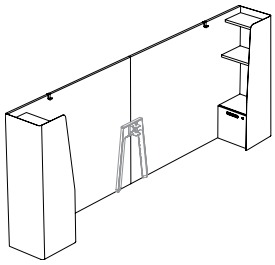

EZ compatible

Floor Screen with Metal Tower – One Drawer – Leg-Mounted – Two Users (JNSFDT)

- Tower includes 16 3/8" high drawer storage
- Only Solid with Pull (T) Front Style can be specified
- Comes with Cityline Recessed (C) Pull Style
- Two Storage Configurations are available:
  - – File Drawer (F)
  - – Recycling/Waste Bin (R)
- Lock option is **not** available with Recycling/Waste Bin (R) Storage Configuration

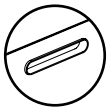

Cityline Recessed (C)

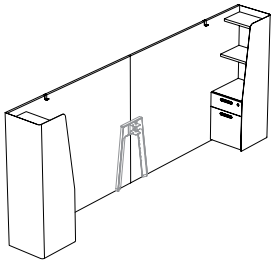

EZ compatible

Floor Screen with Metal Tower – Two Drawers – Leg-Mounted – Two Users (JNSFTT)

- Tower includes 23" high drawer storage
- Only Solid with Pull (T) Front Style can be specified
- Comes with Cityline Recessed (C) Pull Style
- Includes a Box Drawer on Upper Storage. Two Lower Storage Configurations can be specified:
  - – File Drawer (F)
  - – Recycling/Waste Bin (R)
- When the lower storage configuration is Recycling/Waste Bin (R), only the box drawer can be lockable

recycling/waste bin anatomy

Recycling/Waste Bin (R)

- Provides closed recycling and /or waste bin storage
- Storage Bins are removable
- Comes with one flip-down door
- This section is **not** lockable

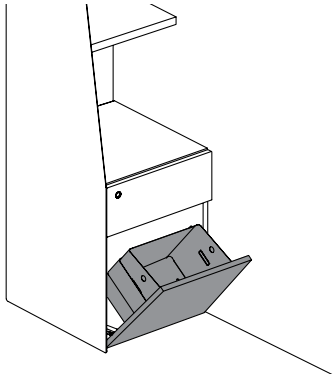

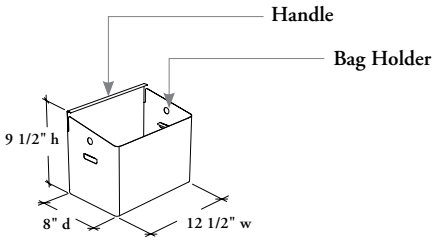

Recycling/Waste Bin require a 20" wide x 12" hide bag (13 Liter Capacity) for a true fit. Waste Bin include side detail to manage the excess of bag is used

floor screen with metal tower – leg-mounted basics (continued)

datum heights & alignments

- Floor Screen with Metal Towers match Teknion standard datum heights of 51" and 57"
- When specified with alignments holes, Floor Screen with Metal Towers – One User can be linked in 90º corners with Floor Screens Beam- or Worksurface-Mounted of the same height

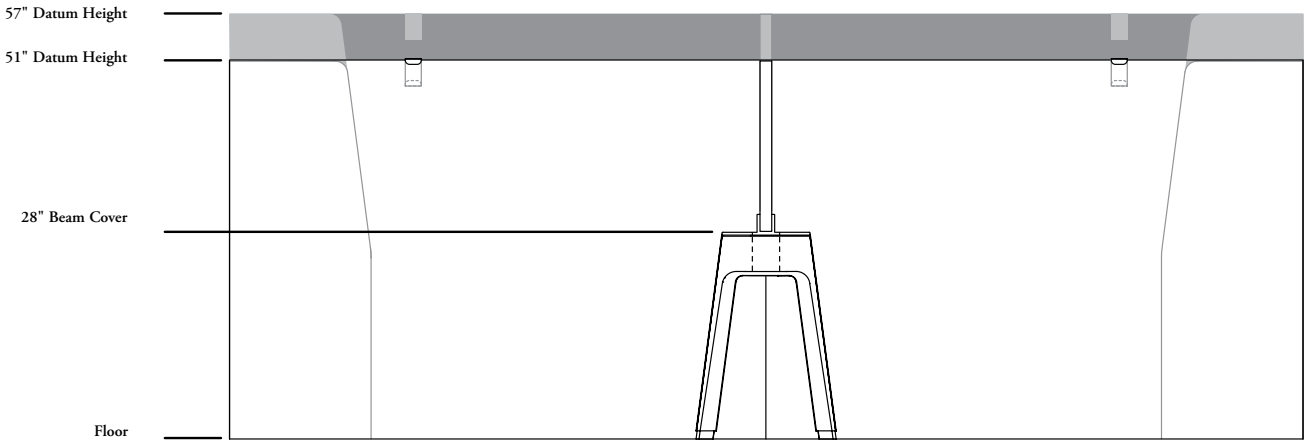

grain direction

- The grain direction on Laminate Solid Screens is **not** directional and always runs horizontal
- On Cathedral Grain the pattern may appear on opposite direction on side by side screen panel

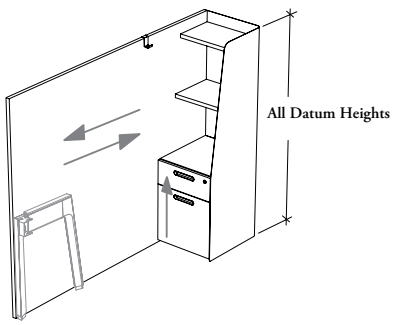

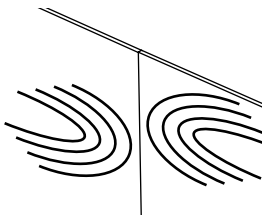

understanding leg-mounting style for floor screen with metal towers

Understanding the different leg-mounting styles is key in specifying appropriate Floor Screen with Metal Towers – Leg-Mounted.

single-sided leg-mounted configuration – one user

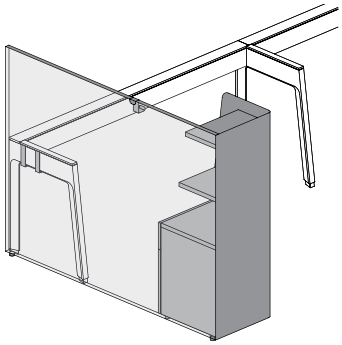

Left (L) (Shown) or Right (R) Application

- Two configurations are available with Single-Sided Leg-Mounted – One User style:
  - Left (L) (Shown)
  - Right (R)
- Left/Right configuration is determined from the user's perpective
- Left or Right configuration can only be used with:
  - Single-Sided Structural Leg – End Position (JNDLS) (Shown)
  - Single-Sided Freestanding Leg (JNALS) with worksurface
  - Single-Sided EZ Structural Leg (JZSLS)

double-sided leg-mounted configuration – two users

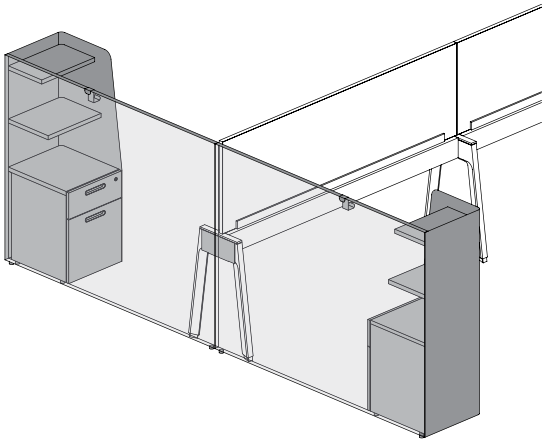

- Available with Double-Sided Leg-Mounted – Two Users style
- Can only be used with:
  - Double-Sided Structural Leg – End Position (JNDLD)
  - Double-Sided Freestanding Leg – End Position (JNALD) with worksurface
  - Double-Sided EZ Structural Leg (JZSLD)
  - EZ Fence Leg – Standard Height (JZSFS) (Shown)

understanding width extension for corner application for floor screen with metal towers – leg-mounted

The following should considered when specifying with Floor Screen with Metal Towers – Leg-Mounted.

- Width Extension Leg-Mounted with **One User style** will allow closing 90° corners with a Beam- or Worksurface-Mounted Floor Screen. For more details, refer on Beam- or Worksurface-Mounted Floor Screens section
- Appropriate specification of this option will allow closing 90° corners made with another Laminate Floor Screen of the same height

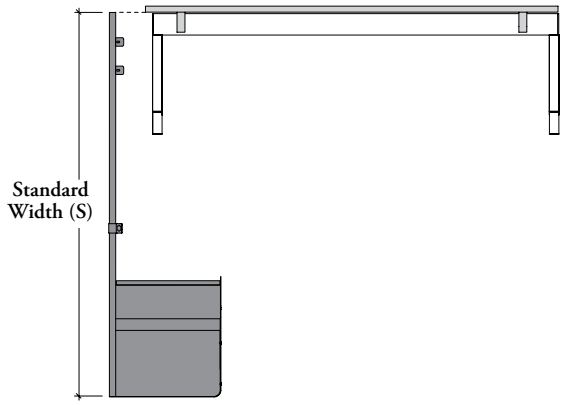

Standard Width (S)

- Flush with the end of the structure
- Can only be specified with:
  - Floor Screen with Metal Tower – Open – Leg-Mounted – One User (JNSFOL) (Shown)
  - Floor Screen with Metal Tower – One Drawer – Leg-Mounted – One User (JNSFDL)
  - Floor Screen with Metal Tower – Two Drawers – Leg-Mounted – One User (JNSFTL)

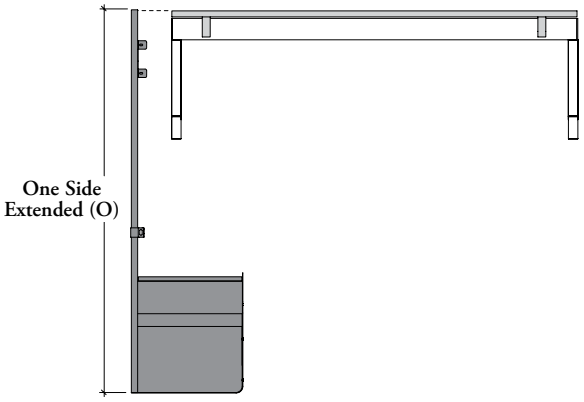

One Side Extended (O)

- The end of the Floor Screen with Metal Tower is extended to cover the thickness of a perpendicular solid screen (same thickness)
- Width extension can only be specified on the back end of Single-Sided Legs. As Legs are already handed, there is no need to specify an orientation
- Can only be specified with:
  - Floor Screen with Metal Tower – Open – Leg-Mounted – One User (JNSFOL) (Shown)
  - Floor Screen with Metal Tower – One Drawer – Leg-Mounted – One User (JNSFDL)
  - Floor Screen with Metal Tower – Two Drawers – Leg-Mounted – One User (JNSFTL)

planning with floor screen with metal towers – leg-mounted

Floor Screen with Metal Towers – Leg-Mounted provide space division and various levels of privacy. The following should be considered when planning with Floor Screen with Metal Towers – Leg-Mounted.

- Can be mounted to a leg only
- It is always use in freewing applications
- The metal tower serve as a stabilizer to the panel

with single-sided workstation – one user style

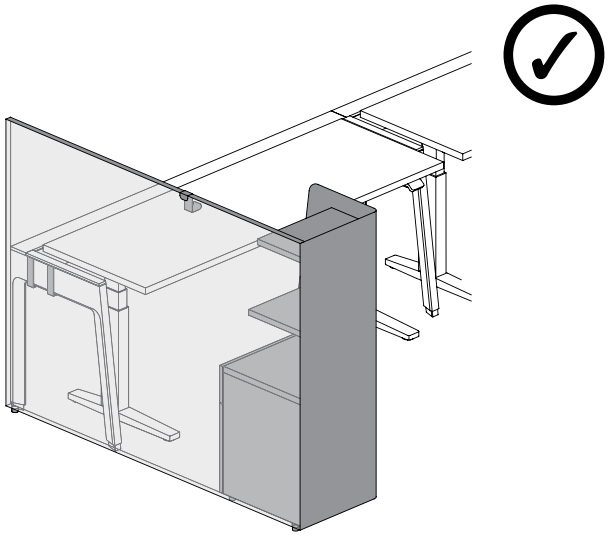

Floor Screen with Metal Tower – Leg-Mounted – One User
Must be mounted in a extended freewing applications when mounted on legs

with double-sided workstation – two users style

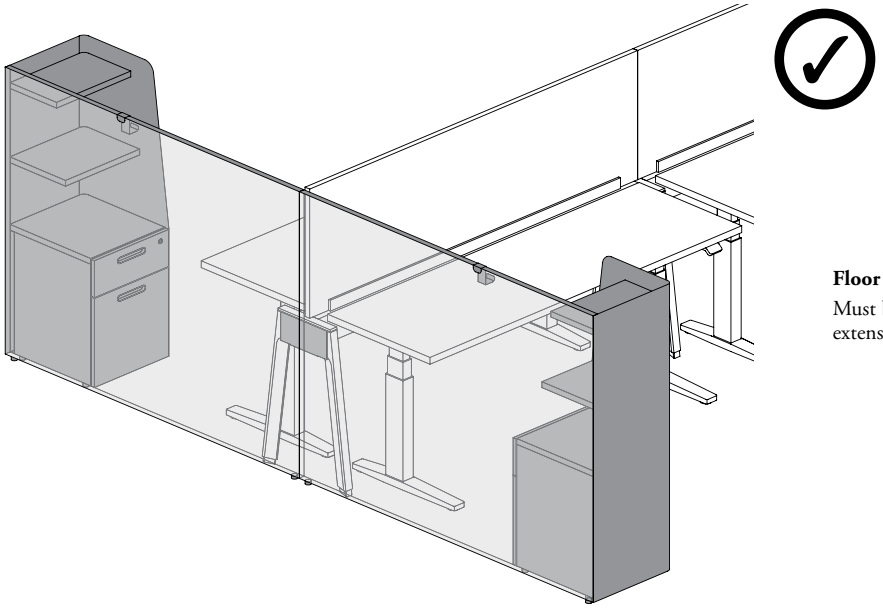

Floor Screen with Metal Tower – Leg-Mounted – Two Users
Must be justified with center double-sided supports only. The extension dimension will be same on both sides

planning with floor screen with metal towers – leg-mounted (continued)

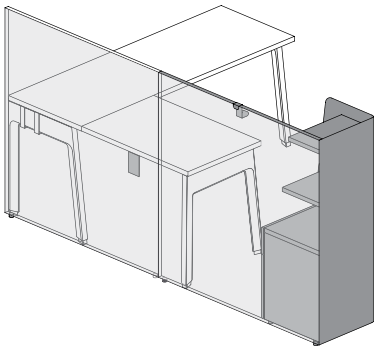

Cannot be linked in a worksurface-mounted configuration

When choosing configuration with one drawer (JNSFDL or JNSFTL) or two drawers (JNSFDT or JNSFTT) take in considaration the space require for the full extension of the drawer in front of the metal tower to avoid any collision with Structural Leg or height-adjustable foot table

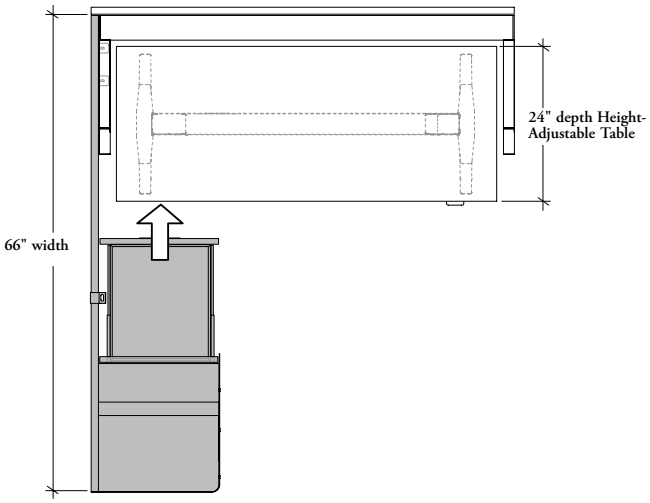

It is recommended the use a 24" deep Height-Adjustable Table, when a 66" wide Floor Screen with Metal Tower and drawer(s) to avoid potential conflict between the drawer and the table foot. Same thing for a 132" wide two users Floor Screen with Metal Tower

Each Floor Screen with Metal Tower, comes with a Hook (or 2 for two users screens) that can be repositioned on the floor screen (user reconfigurable)

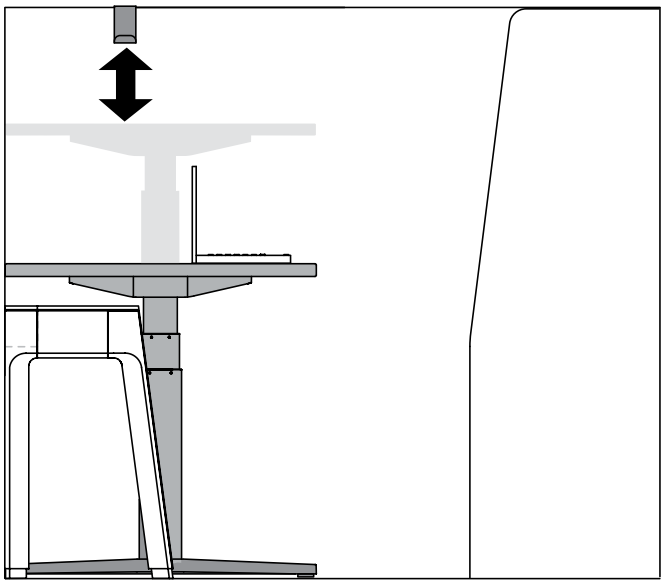

Teknion **doest not** recommend the use a Floor Screen Hook over the Height-Adjustable Worksurfaces. Damages or personal injuries may occur, if accessories are positioned beneath hook

drawer widths & lock chart – floor screen with metal towers – leg-mounted

The following illustrates drawer and open sections nominal widths of the metal towers.

Left configuration is shown

Metal Tower – Open – One or Two Users (JNSFOL or JNSFOT)

Metal Tower – One Drawers – One or Two Users (JNSFDL or JNSFDT)

Metal Tower – Two Drawers – One or Two Users (JNSFTL or JNSFTT)

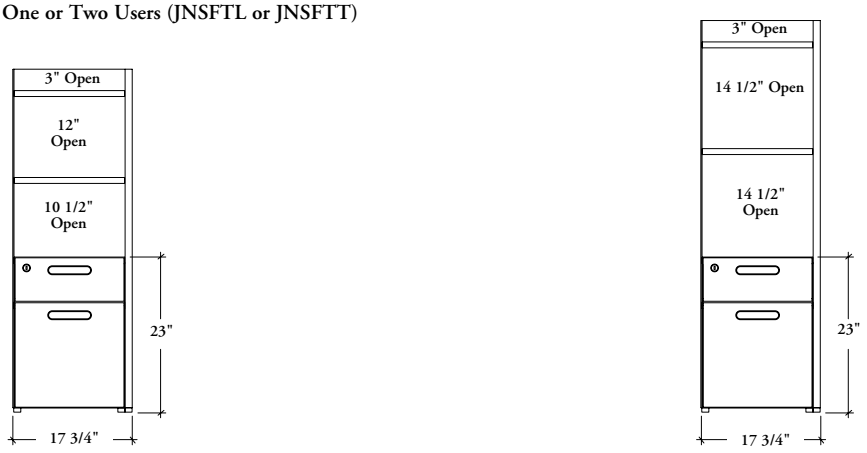

drawer widths & lock chart – floor screen with metal towers – leg-mounted (continued)

Lateral file drawer storage capacities and number of lock are shown below for metal tower with one or two drawers.

Hanging File Bars are supplied in sufficient quantity to accomplish all that is shown below

lateral file drawer widths

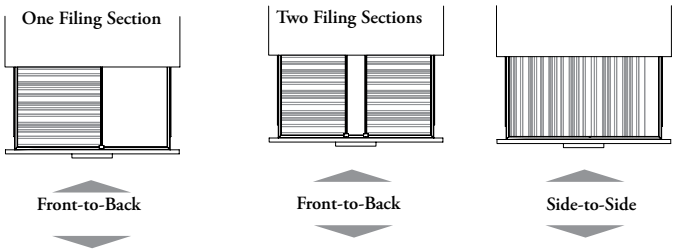

16" wide drawers

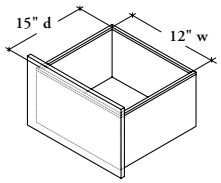

Hanging File Bar (JNFALB) can be ordered separately for replacement of original bars

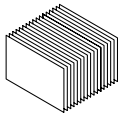

- Letter

n/a

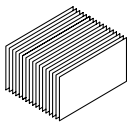

- Letter
- Legal

lock chart

- If specified, all closed storage come with a lock and key set and can be keyed alike or randomly. A Key Chart must accompany every order, otherwise orders will be shipped keyed randomly
- Lock is always placed on the metal tower side
- When the lower storage configuration is Recycling/Waste Bin (R) on a two drawers towers, only the box drawer can be lockable

		number of locks
Lock on Right 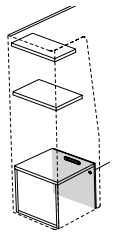 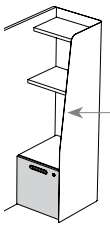 16. 1/2" high drawer Metal Tower Side JNSFDL or JNSFDT 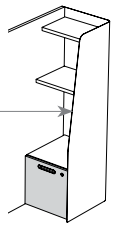 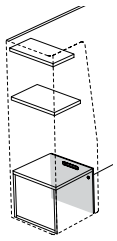 Lock on Left		1 x
Lock on Right 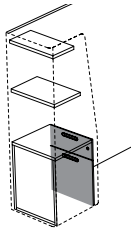 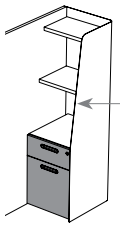 23" high drawer Metal Tower Side JNSFTL or JNSFTT 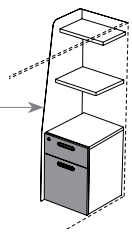 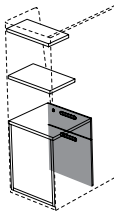 Lock on Left		1 x

Lockable Single Drawer

Lockable Double Drawers

height-adjustable table screens

height-adjustable table screens

UNDERSTANDING HEIGHT-ADJUSTABLE SCREENS 534

ADD-ON SCREEN – HEIGHT-ADJUSTABLE TABLE MOUNTED BASICS . 535

UNDERSTANDING WIDTH REDUCTION FOR LATERAL APPLICATION – HEIGHT- ADJUSTABLE TABLE MOUNTED 537

GLASS EDGE SCREEN – HEIGHT-ADJUSTABLE TABLE MOUNTED BASICS 538

PLANNING WITH GLASS EDGE SCREEN – HEIGHT-ADJUSTABLE TABLE MOUNTED 539

ELEVATED SCREEN – HEIGHT-ADJUSTABLE TABLE MOUNTED BASICS 540

UNDERSTANDING MOUNTING STYLE FOR METAL OR INFINITY ELEVATED SCREENS – HEIGHT-ADJUSTABLE TABLE MOUNTED. . . . 544

UNDERSTANDING WIDTH EXTENSION FOR CORNER APPLICATION – ELEVATED SCREENS – HEIGHT-ADJUSTABLE TABLE MOUNTED. . . . 545

PLANNING WITH ELEVATED SCREENS – HEIGHT-ADJUSTABLE TABLE MOUNTED 546

FELT EDGE SCREEN – HEIGHT-ADJUSTABLE TABLE MOUNTED BASICS 549

PLANNING WITH FELT EDGE SCREEN – HEIGHT-ADJUSTABLE TABLE MOUNTED 550

understanding height-adjustable table screens

Expansion Cityline offers a variety of height-adjustable table screens for space division. They provide user visual and territorial privacy and a lighter aesthetic for both divisional and complementary applications.

Alignment of two contiguous screens is enhanced by different devices for Laminate and Fabric Screens materials. Expansion Cityline also allows mixing screen styles and materials in the same workstation given that product dimensioning has been taken into account for that purpose. However, alignment of consecutive screens can only be done within same screen height, style and material

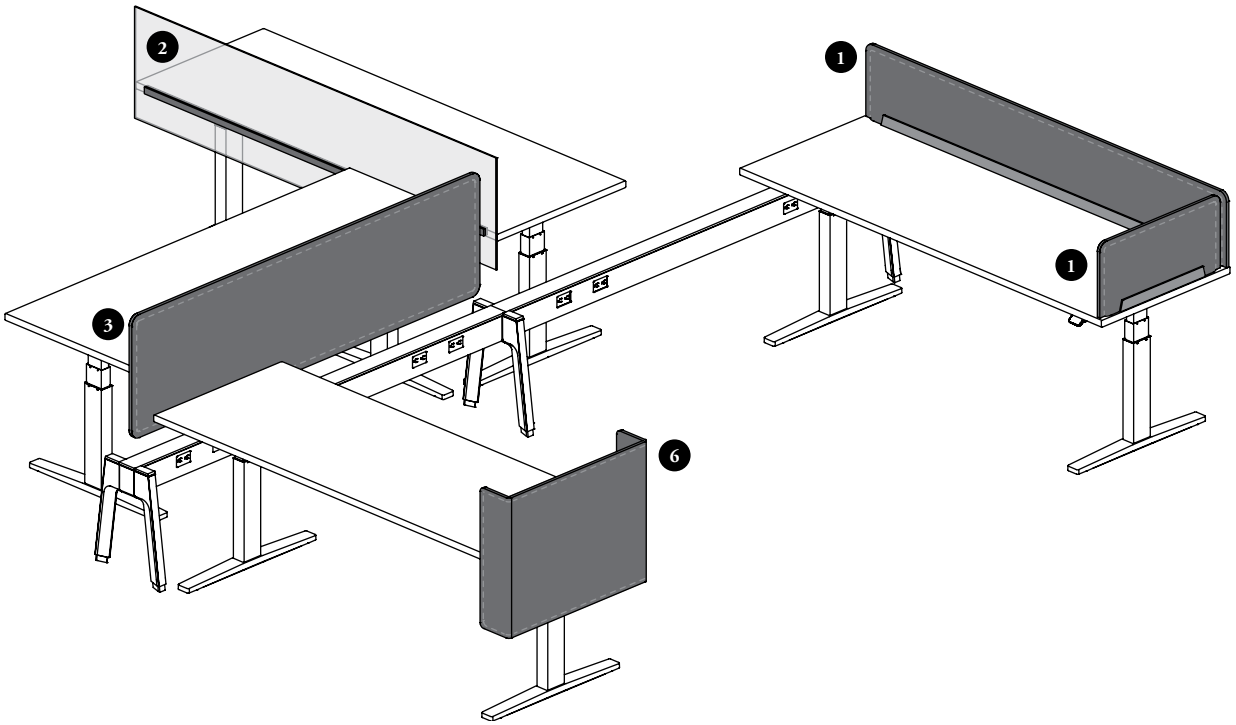

Four main applications:

1. **Add-On Screens –** Create seated privacy and space division above height-adjustable tables – Solid, Glass, Fabric or Felt finishes
2. **Edge Screen –** Provides a territorial screen between users when mounted to the back edge height-adjustable tables – Glass finishes
3. **Elevated Screens –** Create lateral, back or corner privacy and physical separation in between workstations or corridor when overlaid on height-adjustable tables – Solid, Metal, Infinity Fabric, Fabric or Felt finishes
4. **Felt End Screen –** Creates privacy and physical separation with corridor when mounted to the lateral edge of height-adjustable tables – Felt finishes

add-on screen – height-adjustable table mounted basics

Add-On Screens mount onto an hiSpace or Navigate Height-Adjustable Table. Theses screens provide visual and territorial privacy.

- Can be installed on rear or lateral edge of a Worksurface for Navigate Base (JNHWRF, JNHCWRF and JNHV), a hiSpace Quick Connect Worksurfaces with Connection Kit (JNXRW, JNXCRW and JNXV) or Run-Off for EZ Fence (JZWRF)
- Datum heights of Add-On Screens match with Datum heights of all Elevated and Floor Screens style

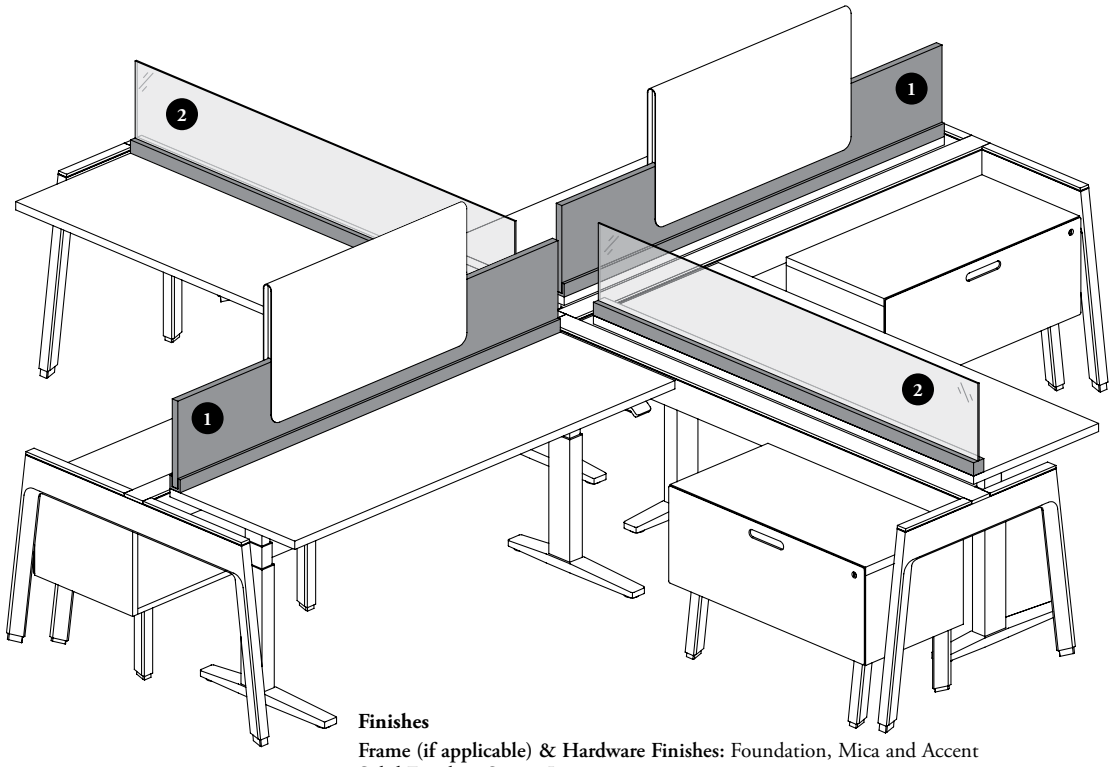

Finishes

Frame (if applicable) & Hardware Finishes: Foundation, Mica and Accent
Solid Finishes: Source Laminate
Glass Finishes: Clear (CL), Frost (FT), Satin (FB), Clear – Low Iron (LA)* or Frost – Low Iron (LB)*
* Low Iron Glass Finishes reduce the greenish render of standard glass. They should be specified anytime this product is installed on the same workstation than a Glass Elevated Screen
Fabric Finishes: Teknion Standard Panel Fabrics
Felt Finishes: Loft colors. Two-sided finished products have same finish on both sides
Stitches Finishes: Carbon Coordinate (C), Shale Coordinate (E), Carrara Coordinate (G), Umber Coordinate (M)

1

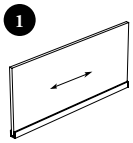

Solid Add-On Screen – Height-Adjustable Table Mounted (JNSASH)

- Provides solid space division, visual privacy and support for complementary screens
- Available 1" thick and two-sided finished
- 42" and 51" high datum are available
- Widths include 23" or 29" and 46" – 82" (3" increments)
- Comes with Standard Corner Details (S)
- Screen ends can be specified With or Without Alignment Holes
- Grain direction on Solid Add-On Screen is horizontal

add-on screen – height-adjustable table mounted basics (continued)

2

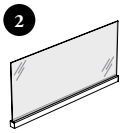

Glass Add-On Screen – Height-Adjustable Table Mounted (JNSAGH)

- Provides glass space division
- Available with a 1/4" (6 mm) thick tempered glass
- Low Iron Glass Finishes reduce the greenish render of standard glass. They should be specified anytime this product is installed on the same workstation than a Glass Elevated Screen
- 42" and 51" high datum are available
- Widths include 23" or 29" and 46" – 82" (3" increments)
- Comes with Standard Corner Details (S)

- Following products provide fabric or felt space division, visual privacy and noise reduction control
- Are tackable on both sides

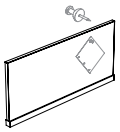

Add-On Screen – Height-Adjustable Table Mounted (JNSAFH)

- 42" and 51" high datum are available
- Widths include 23" or 29" and 46" – 82" (3" increments)
- Comes with Standard Corner Details

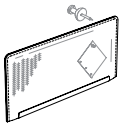

Felt Add-On Screen – Height-Adjustable Table Mounted (JNSAEH)

- 42" and 51" high datum are available
- Widths include 23" or 29" and 46" – 82" (3" increments)
- Come with Radius Corner Details (R)

Felt Finish

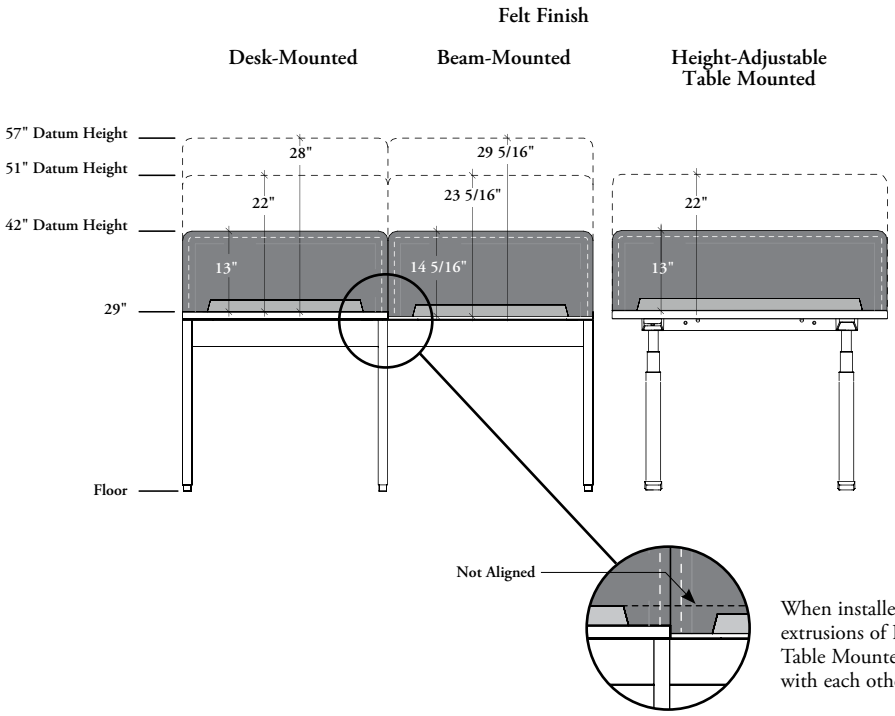

- Felt Screens have a casual look and feel and **cannot** be connected for alignment. However, they can be placed side-by-side or in contiguous combination with other screen materials
- Felt Add-On Screens **cannot** be connected in 90° corners and only provides casual fit in these applications. Refer to page 452 for details on corner specification

When installed side-by-side, the mounting extrusions of Beam-, Desk- or Height-Adjustable Table Mounted Add-On Screens will **not** align with each other for Felt Screens

understanding width reduction for lateral application – height-adjustable table mounted

The following should considered when specifying Add-On Screens – Height-Adjustable Table Mounted.

- Solid, Fabric, Glass and Felt Screen mounting extrusions are all of the same dimension, therefore, the mix of these four materials in 90° junctions is optimal when appropriate width reduction for lateral application is specified
- Gaps between two substrates in 90° junctions depend on material thicknesses
- The applications illustrated below are applicable with all styles Height-Adjustable Table Mounted Add-On Screens

solid, glass, fabric or felt add-on screens

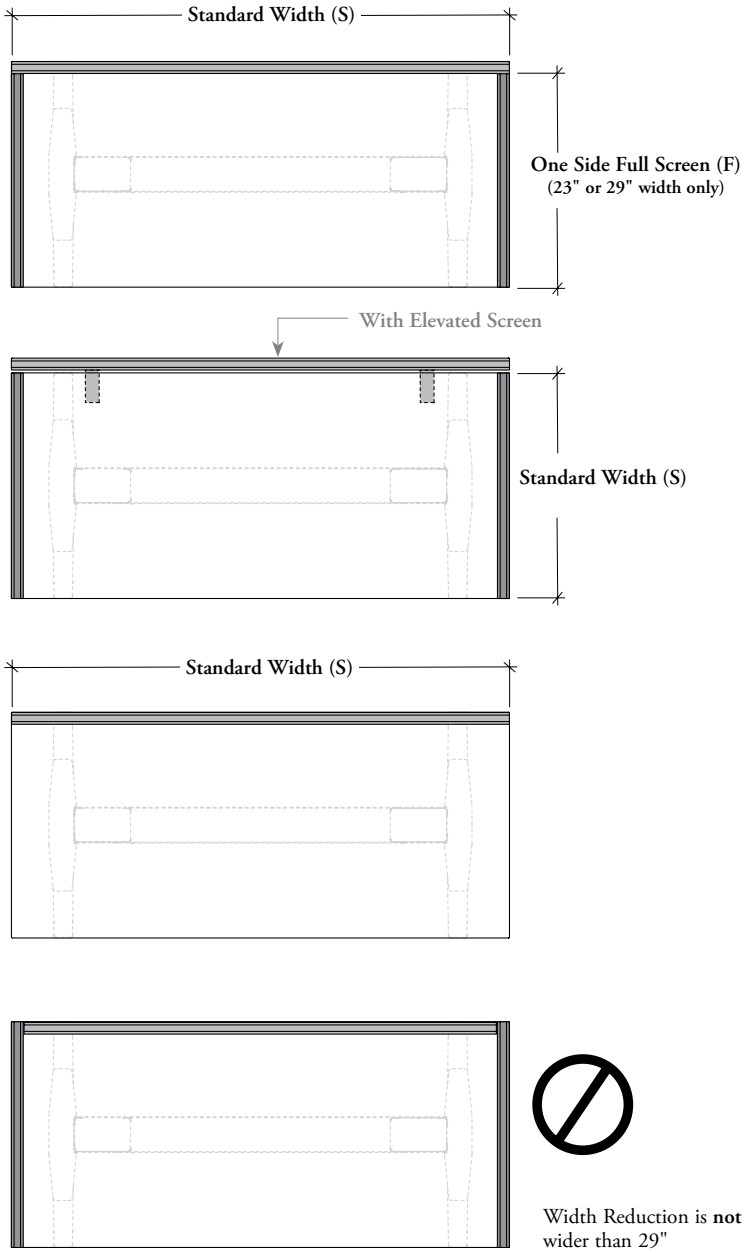

Width Reduction is **not** available for screens wider than 29"

Two reduction options are available:

Standard Width (S)

- The screen comes flush on both ends. Screen matches width or depth of worksurface
- Can be specified on-module with worksurfaces
- All table widths are available

One Side Full Screen (F)

- The One Side Full Screen option can be specified flush on one end and recessed of a full screen base thickness at other end
- Only available with 23" or 29" deep table
- This configuration enables 90° junctions and can be specified with:
  - Solid Add-On Screen Height-Adjustable Table Mounted (JNSASH)
  - Glass Add-On Screen Height-Adjustable Table Mounted (JNSAGH)
  - Fabric Add-On Screen Height-Adjustable Table Mounted (JNSAFH)
  - Felt Add-On Screen Height-Adjustable Table Mounted (JNSAEH)

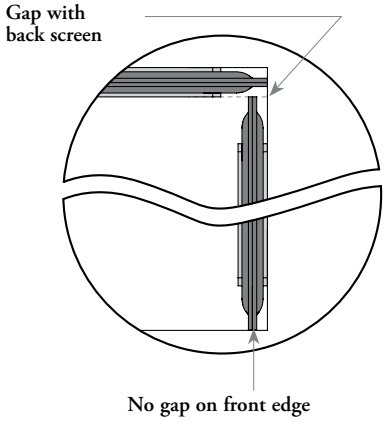

glass edge screen – height-adjustable table mounted basics

The Glass Edge Screen – Height-Adjustable Table Mounted can be mounted on-module on Worksurfaces for Height-Adjustable Base to provide partial privacy at 42" high.

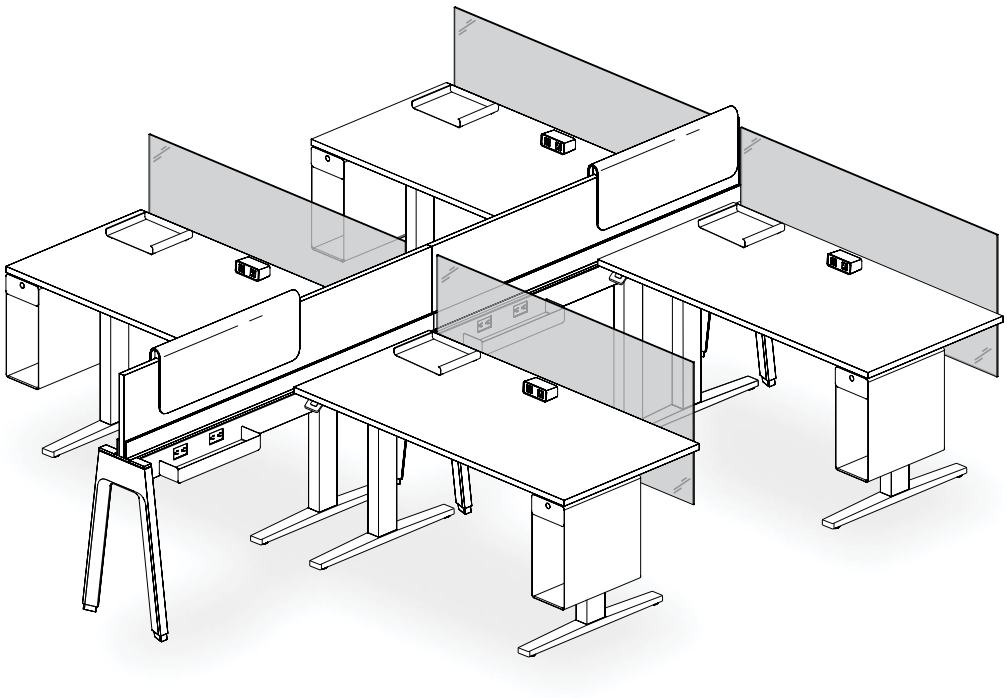

Finishes

Glass Finishes: Frost (FT) or Frost – Low Iron (LB)* is a single-sided etched tempered glass which is facing inward of workstation

* **Low Iron Glass Finishes** reduce the greenish render of standard glass. They should be specified anytime this product is installed on the same workstation than a Glass Elevated Screen

Hardware Finishes: Foundation, Mica and Accent

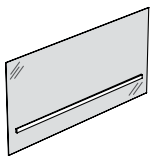

18" from Floor (18)

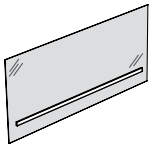

22" from Floor (22)

Glass Edge Screen – Height-Adjustable Table Mounted (JNSWGH)

- A territorial screen that is mounted on the back or side edge of a worksurface for Navigate Base or hiSpace Worksurface with Quick Connect Kit
- Both Glass Finishes are 1/4" (6 mm) tempered glass
- 42" high datum is allowed
- Widths include 23" or 29" and 46" – 82" (3" increments)
- Provide partial privacy from 9 1/2" or 13" below worksurface up to 13" above worksurface

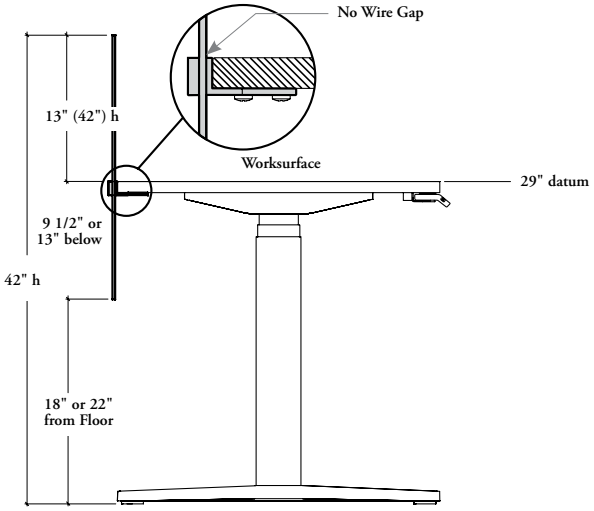

planning with glass edge screen – height-adjustable table mounted

The following should be considered when planning with Glass Edge Screen – Height-Adjustable Table Mounted.

- Provide partial visual privacy above and below worksurfaces
- Can only be attached to the back or side edge of Rectangular or 120° Worksurfaces for Navigate Base (JNHWRF, JNHCWRF or JNHV), hiSpace Worksurfaces with Quick Connect Kit (JNXRW, JNXCRW or JNXV) or Run-Off for EZ Fence (JZWRF)
- **Cannot** be used in combination with Suspended Modesty Panels (JNASMG or JNASML)

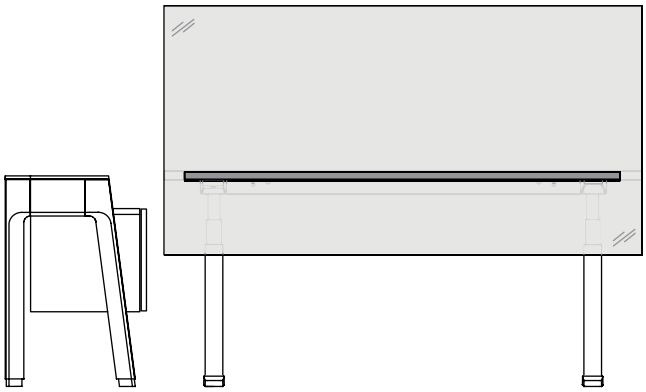

When specifying a glass edge screen on the back edge of the hiSpace or Navigate Rectangular or 120° Worksurface, it is recommended to specify it on-module. However, the specification software shows the mounting brackets in order to avoid any interference of an off-module screen with the grommet cut-outs

elevated screen – height-adjustable table mounted basics

The Elevated Screens create privacy and physical separation between workstations or corridor when overlaid on worksurfaces of height-adjustable tables.

- Elevated Screens are offered to match with Teknion standard datum heights of 42" or 51"
- Mounts on- or off-module on the back or side edge of a Worksurface for Navigate Base, a hiSpace Worksurface with Quick Connect Kit or Run-Off for EZ Fence. Off-modularity may be limited, refer to specification software

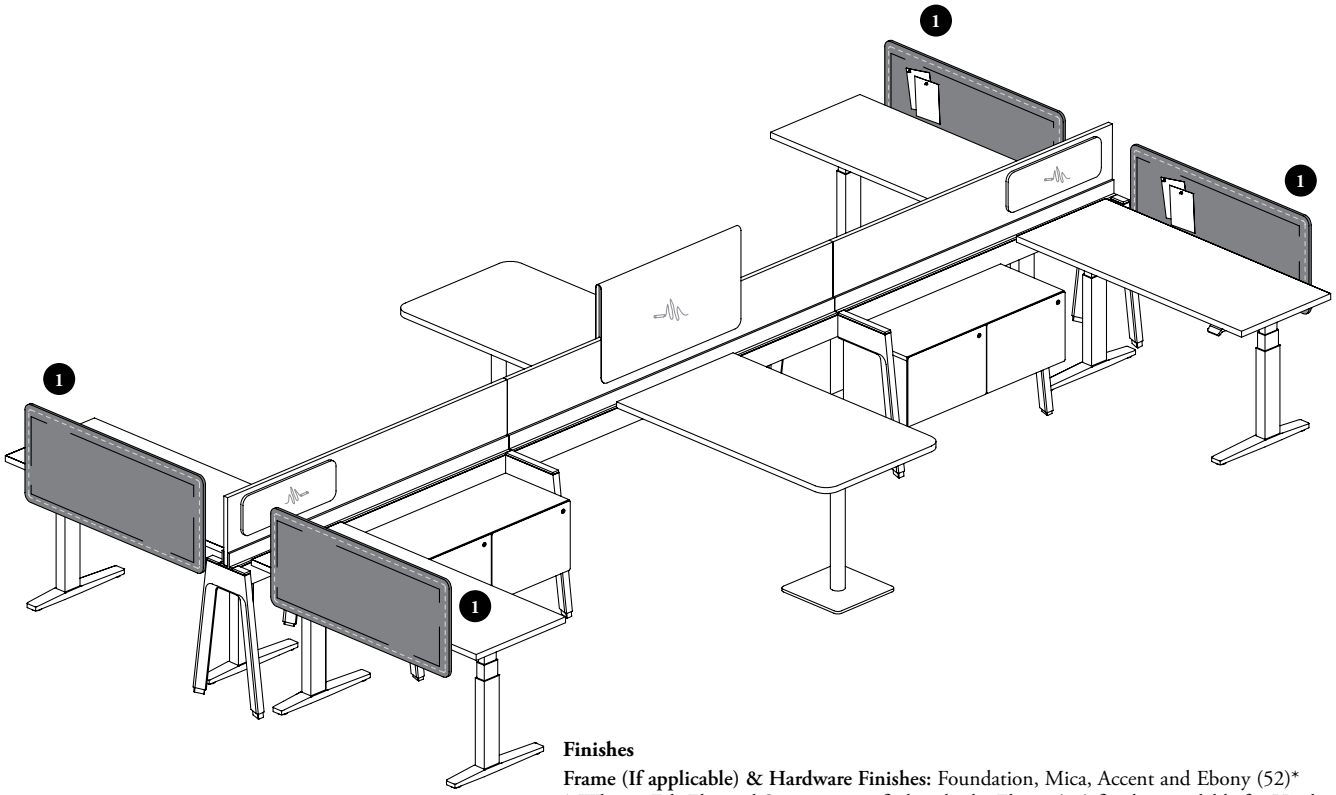

Finishes

Frame (If applicable) & Hardware Finishes: Foundation, Mica, Accent and Ebony (52)*
* When a Felt Elevated Screen is specified, only the Ebony (52) finish is available for Hardware Finish
Solid Finishes: Source Laminate
Metal Finishes: Foundation, Mica or Accent
Pattern Style: Plus (P), Square (S) or None (N)
Infinity and Fabric Finishes:** Teknion Standard Panel Fabrics,
** Specified separately for inner and outer sides
Felt Finishes: Loft colors. Two-sided finished products have the same finish on both sides
Stitches Finishes: Carbon Coordinate (C), Shale Coordinate (E), Carrara Coordinate (G), Umber Coordinate (M)

elevated screen – height-adjustable table mounted basics (continued)

- Following products provide Infnity fabric, fabric or felt space division, visual privacy and noise reduction control
- Only fabric or felt screens are tackable on both sides

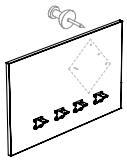

18" from floor (18)

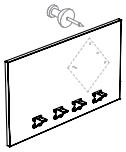

22" from floor (22)

Fabric Elevated Screen – Height-Adjustable Table Mounted (JNSEFH)

- Inner and outer finishes are specified separately
- Modesty Base Height can be specified 18" (18) or 22" (22) from floor
- 42" or 51" high datum is allowed
- Widths include 23" or 29" and 46" – 82" (3" increments)
- Come with Standard Corner Details

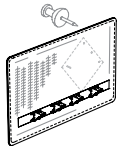

18" from floor (18)

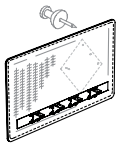

22" from floor (22)

Felt Elevated Screen – Height-Adjustable Table Mounted (JNSEEH) [1]

- Felt Finish is the same on both sides
- Modesty Base Height can be specified 18" (18) or 22" (22) from floor
- 42" or 51" high datum is allowed
- Widths include 23" or 29" and 46" – 82" (3" increments)
- Come with Radius Corner Details (R)

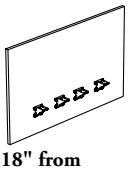

18" from floor (18)

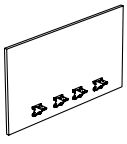

22" from floor (22)

Solid Elevated Screen – Height-Adjustable Mounted (JNSESH)

- Available 1" thick and two-sided finished
- Modesty Base Height can be specified 18" (18) or 22" (22) from floor
- 42" or 51" high datum are available
- Widths include 23" or 29" and 46" – 82" (3" increments)
- Comes with Standard Corner Details (S)
- Screen ends can be specified With (W) or Without (N) Alignment Holes to allow installation of Linking Devices

grain direction

- Always runs horizontal
- The grain direction on Laminate Solid Screens is **not** directional. It may appear in different directions on side-by-side screens

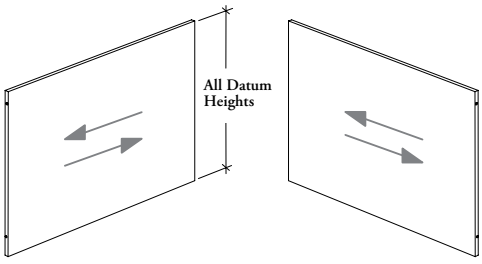

elevated screen – height-adjustable table mounted basics (continued)

metal screen

- It is composed of a one sheet metal part
- Comes with magnetic surface and Rare Earth Magnets (JNARM) can be used and specified separately
- 42" or 51" high datum is allowed
- Come with Radius Corner Details (R)

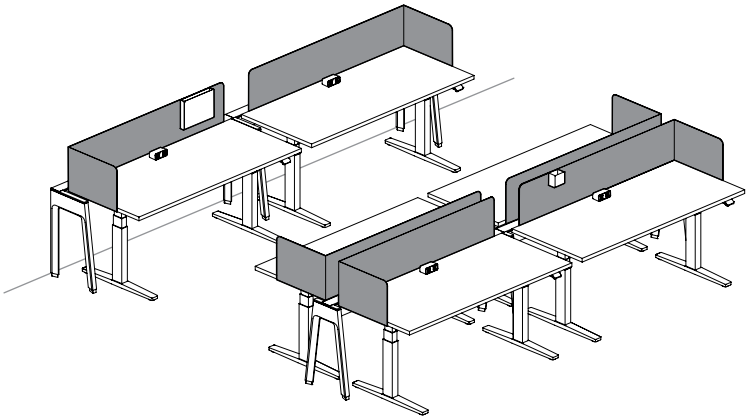

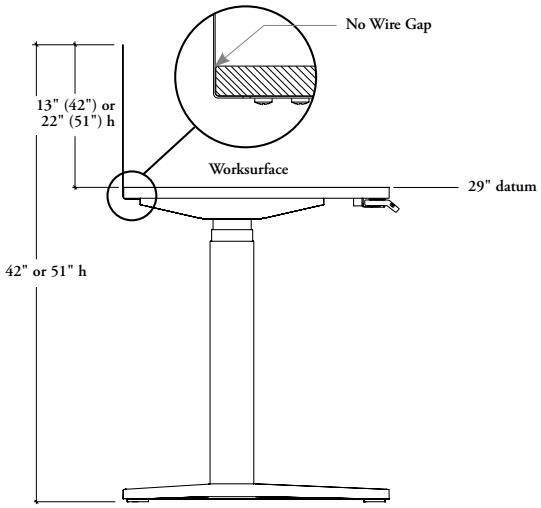

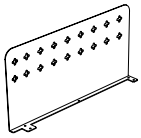

Metal Lateral Elevated Screen – Height-Adjustable Table Mounted (JNSMLH)

- Can be installed on side edge of a worksurface
- Widths include 23" or 29"
- Can be specified flush (0") or with 9" width extension to the front to provide additional privacy

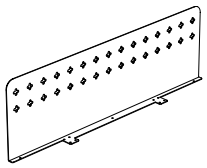

Metal Back Elevated Screen – Height-Adjustable Table Mounted (JNSMEH)

- Can be installed on back edge of a worksurface
- Widths include 46" – 70" (6" increments)

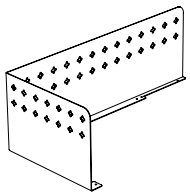

Metal Corner Elevated Screen – Height-Adjustable Table Mounted (JNSMCH)

- Can be installed on a side and a back edge of a worksurface
- Depths include 20", 23" or 29"
- Widths include 34" – 70" (6" increments)

pattern styles

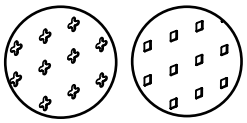

Plus (P) **Square (S)**

- Can be specified with patterns (see through cut-outs) that are compatible with Metal Screen Accessories (JNAPM) (sold separately)
- Three pattern styles are available: Plus (P) (Shown), Square (S) or None (N)

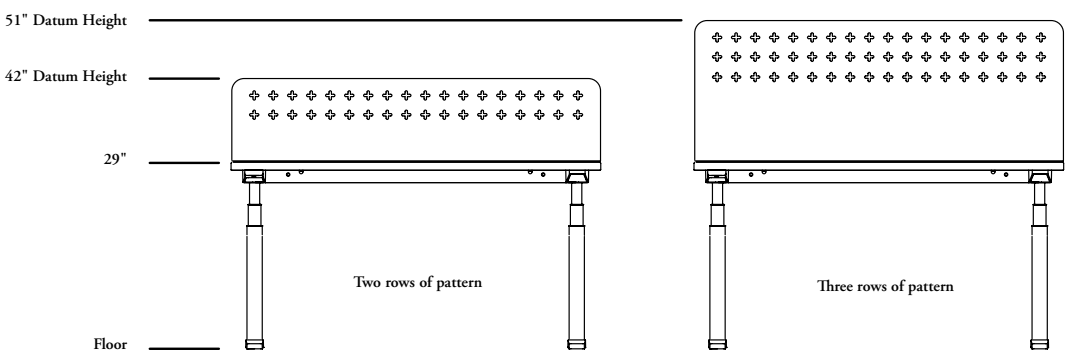

elevated screen – height-adjustable table mounted basics (continued)

infinity screen

- It is compose of a 1/2" thick lightweight upholstered fabric is the same on both sides and is **not** tackable.
- 42" or 51" high datum is allowed, refer on previous page
- Modesty Base Height can be specified 18" (18) or 22" (22) from floor
- Come with Radius Corner Details
- Mounts on- or off-module on the back edge of a hiSpace or Navigate worksurface. Off-modularity may be limited, refer to specification software for compatibility

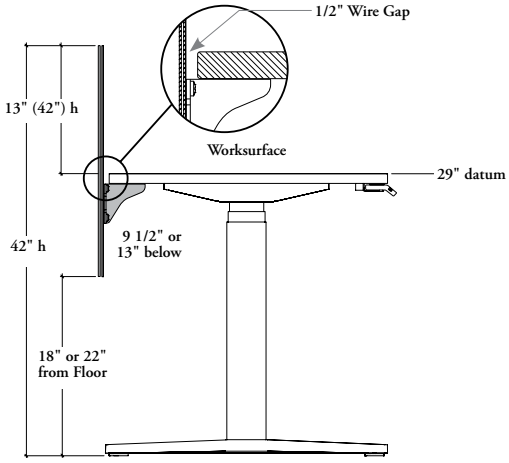

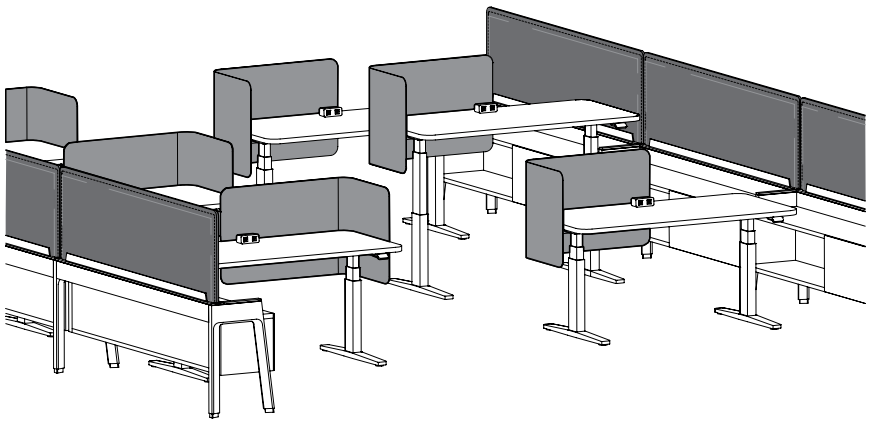

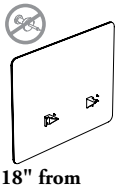

18" from floor (18)

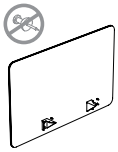

22" from floor (22)

Infinity Lateral Elevated Screen – Height-Adjustable Table Mounted (JNSXLH)

- Can be installed on side edge of a worksurface
- Widths include 23" or 29"
- Can be specified flush (0") or with 9" width extension to the front to privide additional privacy

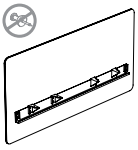

18" from floor (18)

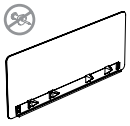

22" from floor (22)

Infinity Back Elevated Screen – Height-Adjustable Table Mounted (JNSXEH)

- Can be installed on back edge of a worksurface
- Widths include 46" – 82" (6" increments)

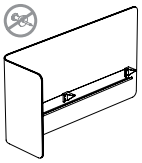

18" from floor (18)

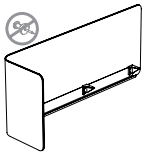

22" from floor (22)

Infinity Corner Elevated Screen – Height-Adjustable Table Mounted (JNSXCH)

- Can be installed on a side and a back edge of a worksurface
- 20" depth is available
- Widths include 23" – 59" (6" increments)

understanding mounting style for metal or infinity elevated screens – height-adjustable table mounted

Understanding the different mounting styles key in specifying appropriate elevated screens.

- **Not** compatible with Height-Adjustable Run-Off – Bevel Base (JNHB)
- **Not** applicable with Elevated Screens – Height-Adjustable Table Mounted (JNSESH, JNSEFH or JNSEEH), refer on next page

lateral screen

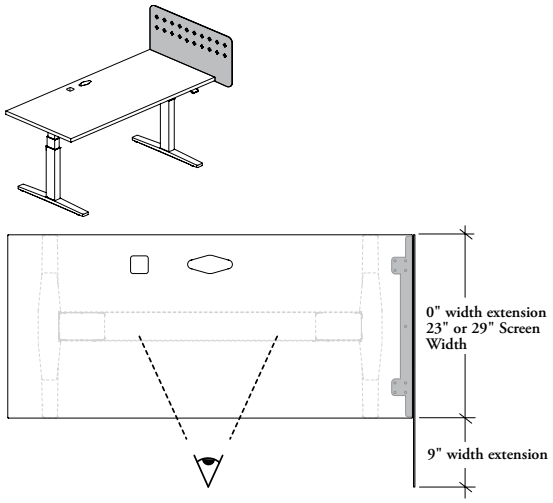

- Only the 9" width extented screens are handed: Left (L) or Right (R). The configuration is determined from the users perspective
- Can be used with:
  - hiSpace Rectangular Worksurface with Quick Connect (JNXRW)
  - hiSpace Rectangular Worksurface with Quick Connect Kit – Cross Grain (JNXCRW)
  - Rectangular Worksurface for Navigate Base (JNHWRF)
  - Rectangular Worksurface for Navigate Base – Cross Grain (JNXCRWF)
  - 120° Worksurface for Navigate Base – Cross Grain (JNHV)
  - Run-Off for EZ Fence (JZWRF)

back screen

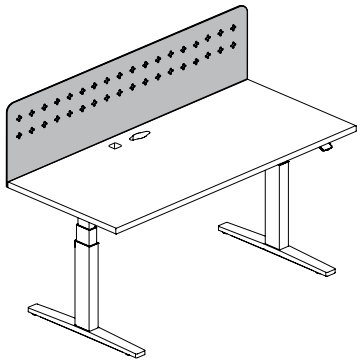

- The back side of the worksurface is the opposite side of where the user sit
- This screen is **not** handed
- Mounts on- or off-module of a hiSpace or Navigate worksurface. Off-modularity may be limited, refer to specification software for compatibility
- Can be used with:
  - hiSpace Rectangular Worksurface with Quick Connect (JNXRW)
  - hiSpace Rectangular Worksurface with Quick Connect Kit – Cross Grain (JNXCRW)
  - Rectangular Worksurface for Navigate Base (JNHWRF)
  - Rectangular Worksurface for Navigate Base – Cross Grain (JNXCRWF)
  - Run-Off for EZ Fence (JZWRF)
  - hiSpace 120º Worksurface with Quick Connect Kit (JNXV)
  - 120º Worksurface for Navigate Base (JNHV)

corner screen

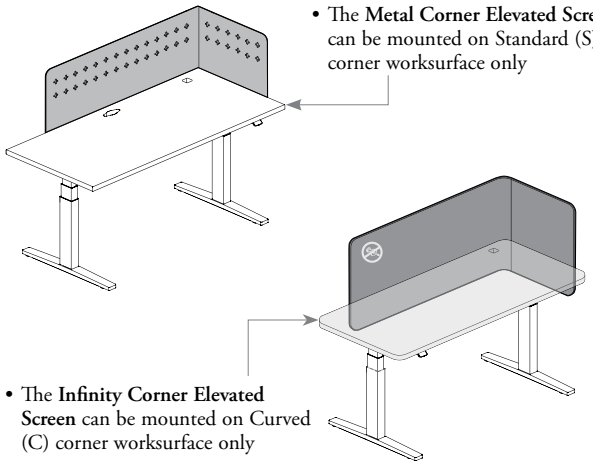

- The **Metal Corner Elevated Screen** can be mounted on Standard (S) corner worksurface only
- The **Infinity Corner Elevated Screen** can be mounted on Curved (C) corner worksurface only

- Left (L) or Right (R) configuration is determined from the users perspective
- Can be specified with:
  - hiSpace Rectangular Worksurface with Quick Connect (JNXRW)
  - hiSpace Rectangular Worksurface with Quick Connect Kit – Cross Grain (JNXCRW)
  - Rectangular Worksurface for Navigate Base (JNHWRF)
  - Rectangular Worksurface for Navigate Base – Cross Grain (JNXCRWF)
  - Run-Off for EZ Fence (JZWRF)

understanding width extension for corner application – elevated screens – height-adjustable table mounted

- Only available with hiSpace or Navigate Rectangular or 120° Worksurface (JNXRW, JNXCRW, JNHWRF, JNHCWRF, JNXV or JNHV)
- Can be specified on-module
- Can also be specified off-module but the mounting brackets may interfere with grommet cut-outs, refer to specification software for compatibility
- **Not** available with Height-Adjustable Run-Off – Bevel Base (JNHB)
- **Not** applicable with Metal (JNSMLH, JNSMEH or JNSMCH) and Infinity (JNSXLH, JNSXEH or JNSXCH) Elevated Screens – Height-Adjustable Height Table, refer on previous page

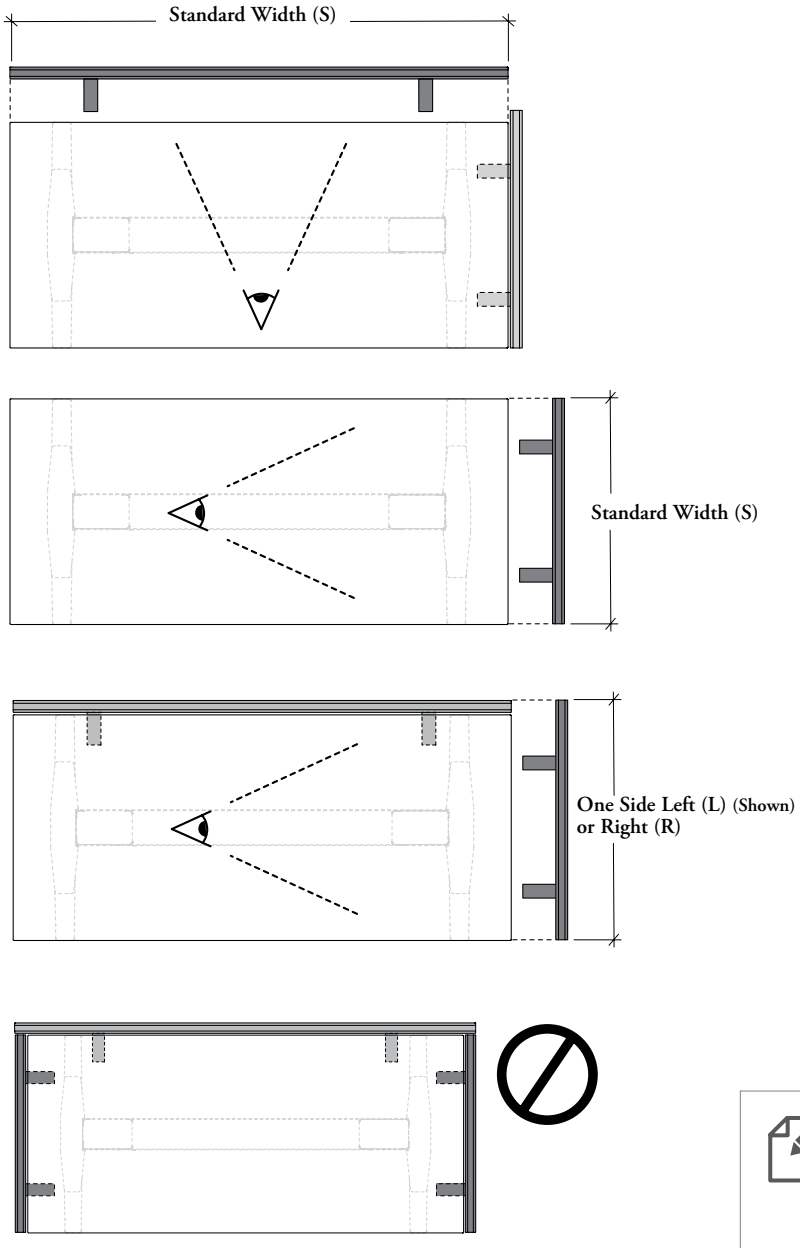

Width Extension is **not** available for screens wider than 29"

Two width extension options are available:

Standard Width (S)

- Both ends of screen come flush with what it is mounted to
- All widths table are available
- Can be specified with:
  - Solid Elevated Screen – Height-Adjustable Table Mounted
  - Fabric Elevated Screen – Height-Adjustable Table Mounted
  - Felt Elevated Screen – Height-Adjustable Table Mounted

One Side – Left (L) (Shown) **or Right (R)**

- Either left or right end of screen is extended to cover the thickness of a perpendicular screen of same material
- Handedness is determined by the extended end position when looking at the inner side of the screen
- Only available with 23" or 29" deep table
- Can be specified with:
  - Solid Elevated Screen – Height-Adjustable Table Mounted
  - Fabric Elevated Screen – Height-Adjustable Table Mounted

120° corners with Elevated Screens **cannot** be closed

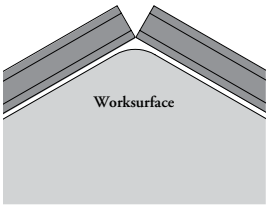

planning with elevated screens – height-adjustable table mounted

The following should be considered when planning with Elevated Screens – Height-Adjustable Table Mounted.

on- and off-module application

- Compatible with hiSpace and Navigate table
- Elevated Screen requires additional clearance from Structural Beam and facing side electrical if applicable

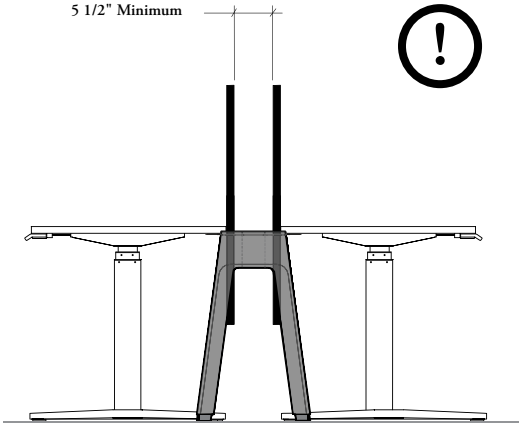

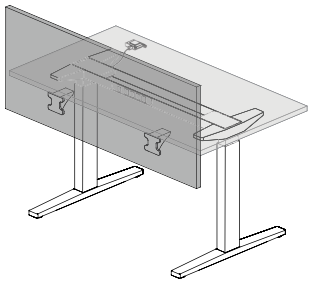

Height-Adjustable Table – Cityline Restricted option combined with Low-Height Fence

22" from floor Elevated Screen – Height-Adjustable Table Mounted allows to be positioned over the Low-Height Fence when Navigate Height-Adjustable Tables with Cityline Restricted configuration is selected

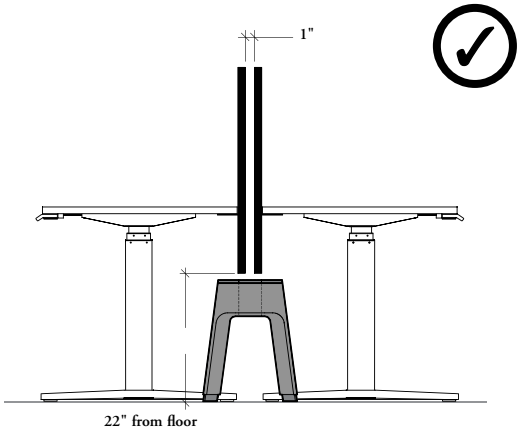

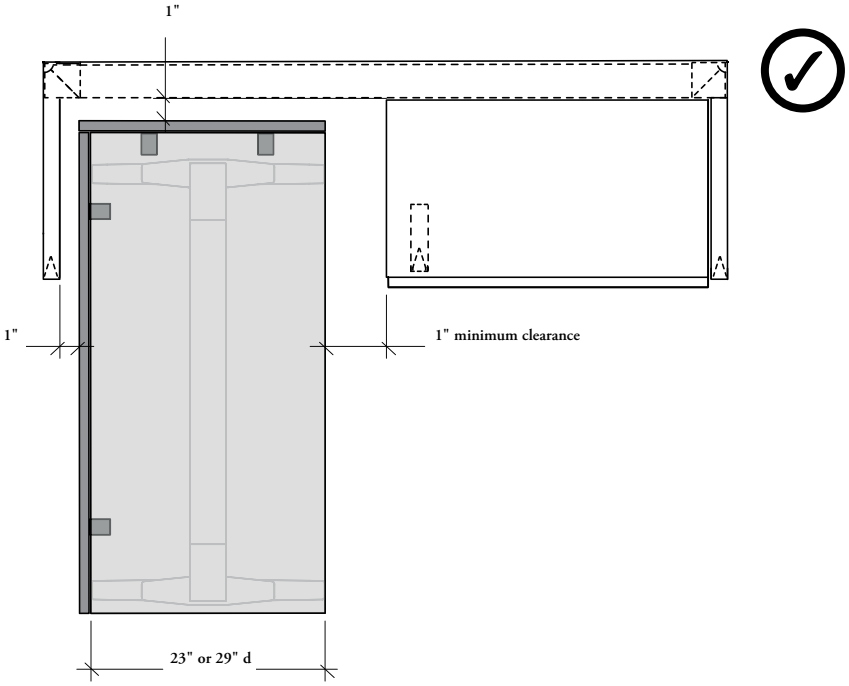

When planning with Height-Adjustable Table, 1" clearance is required all around the table. When an elevated screen is installed on the table, that same gap must be kept

planning with elevated screens – height-adjustable table mounted (continued)

Other stability restrictions for Navigate tables are applicable when a screen is sprecified, refer to Planning with Height-Adjustable Screens for Navigate Tables on page 400

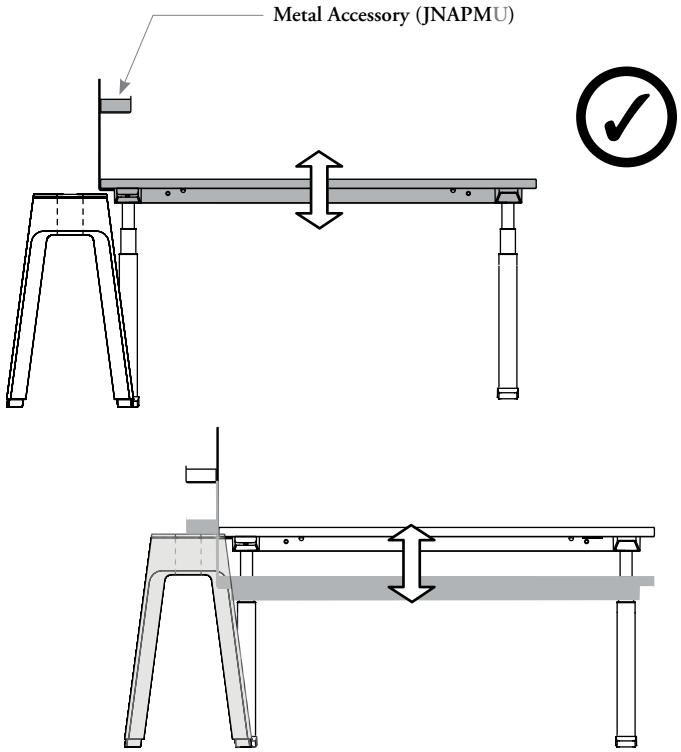

- When a Metal Lateral, Back or Corner Elevated Screen is used with Metal Screen Accessories (JNAPM), it is recommended to used the accessories on the worksurface side
- When used outside edge of the screen, pay attention to potential conflicts with the structure and surrounding objects

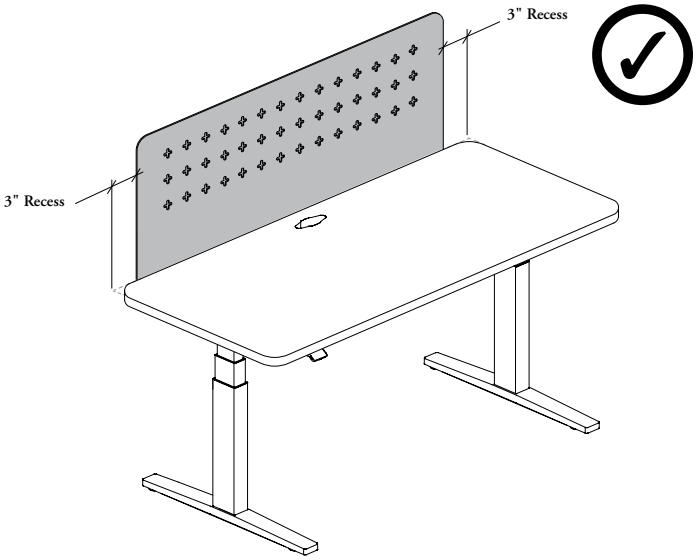

When a elevated screen is used on a curved corner worksurface, the screen must be specified 6" shorter to clear the corner of the worksurface. The screen may interfere with grommet cut-outs, refer to specification software for compatibility

planning with elevated screens – height-adjustable table mounted (continued)

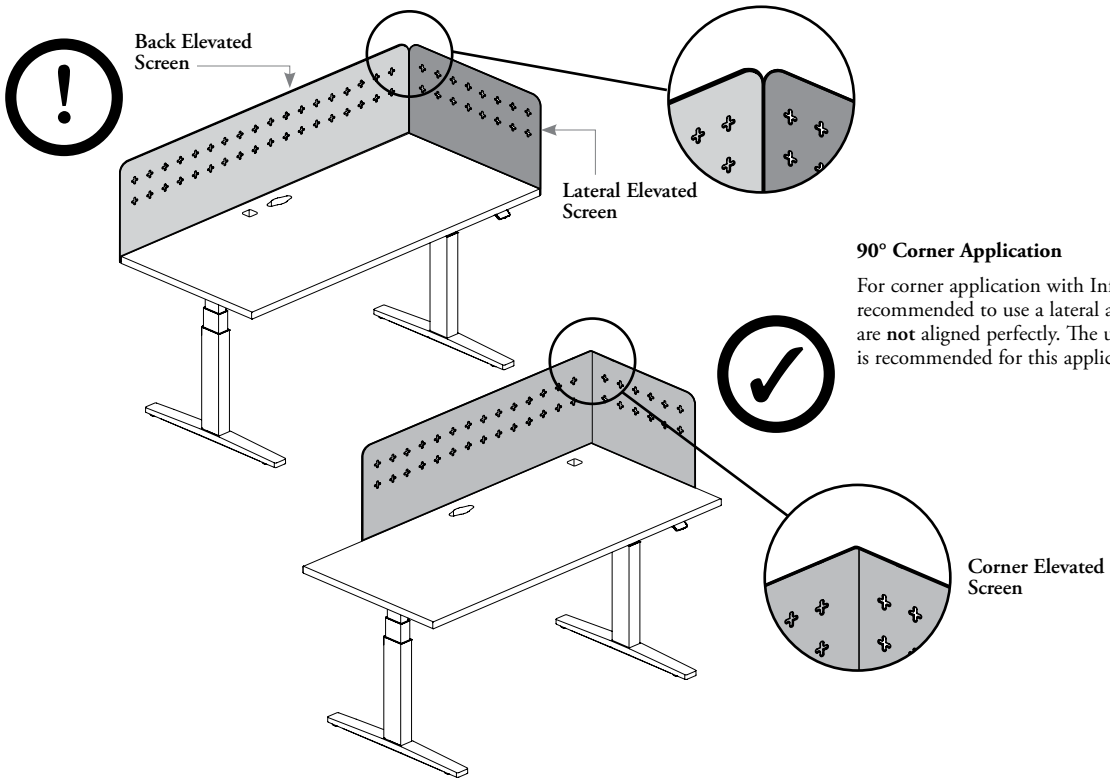

90° Corner Application

For corner application with Infinity or Metal Screen, it is **not** recommended to use a lateral and a back screen. The screens are **not** aligned perfectly. The use of a Corner Elevated Screen is recommended for this application

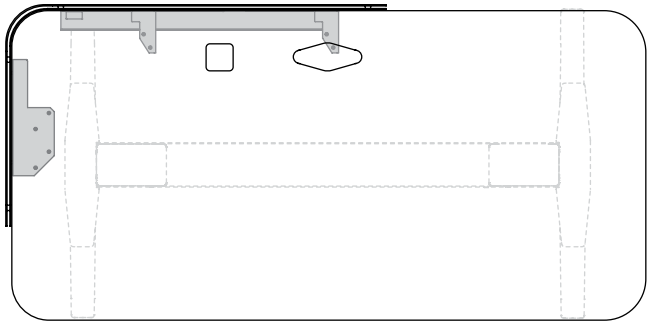

The use of an off-module Infinity Corner Elevated Screen may be in conflict with a grommet cut-outs. However, the specification software shows the mounting brackets in order to avoid any interference

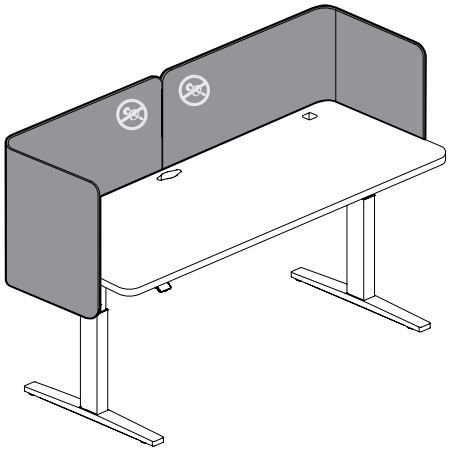

- A left and a right Infinity Corner Elevated Screen can be combined to create a carrel look
- **Not** available with Metal Corner Elevated Screen

felt end screen – height-adjustable table mounted basics

The Felt End Screen – Height-Adjustable Table Mounted offers noise reduction control, provides physical separation with access pathway and personal storage when mounted on workstation ends.

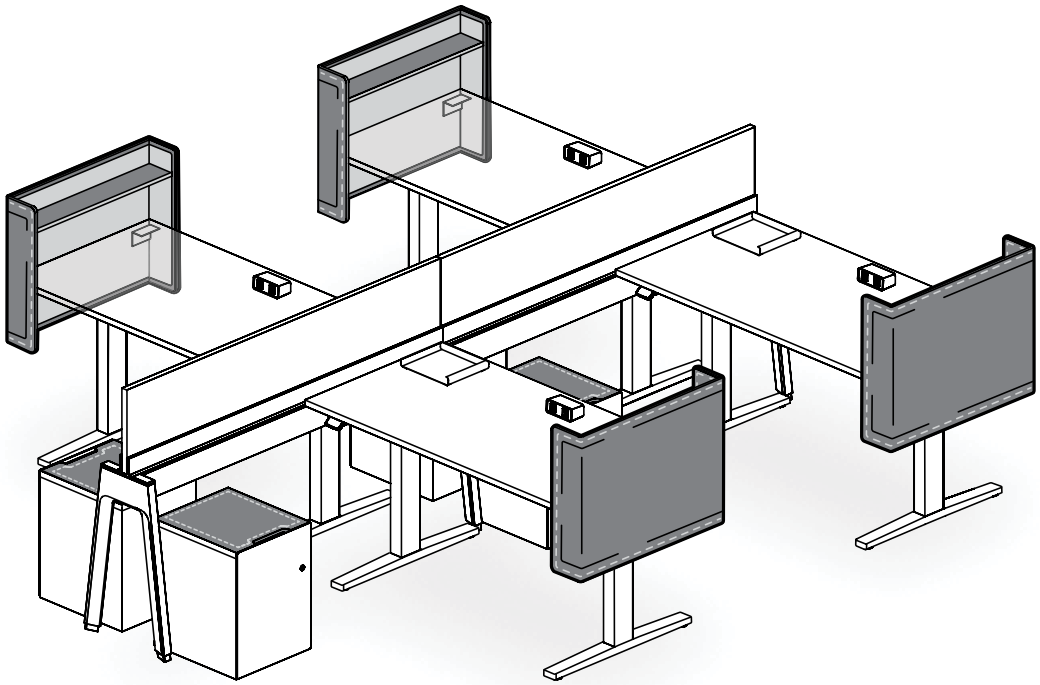

Finishes

Felt Finishes (outside screen and shelf liner): Loft
Stitches Finishes: Carbon Coordinate (C), Shale Coordinate (E), Carrara Coordinate (G) or Umber Coordinate (M)
Inside Finishes: Foundation, Mica and Accent

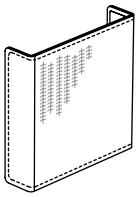

Felt End Screen – Height-Adjustable Table Mounted (JNSELEH)

- Outside screen (corridor) is finished in Felt and is tackable
- Inside screen and small shelf (table side edge) are finished in metal (felt liner on shelf) and is magnetic
- Only 42" high datum is available
- Widths include 23" or 29"
- Comes with Radius Corner Details (R)
- Provide partial privacy from 11" below worksurface up to 13" above worksurface

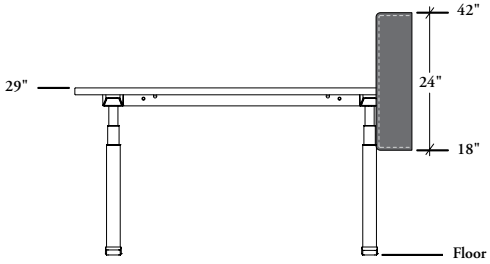

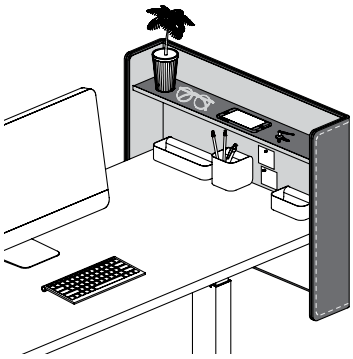

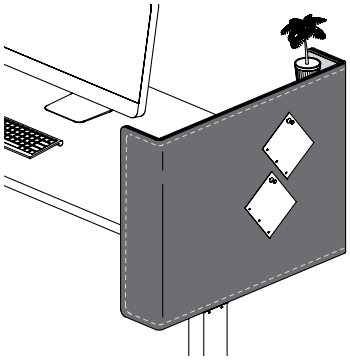

planning with felt end screen – height-adjustable table mounted

The following should be considered when planning with a Felt End Screen – Height-Adjustable Table Mounted.

- Must be specified on-module with the worksurface depth on which it is mounted
- Can be installed on one side of the worksurface only

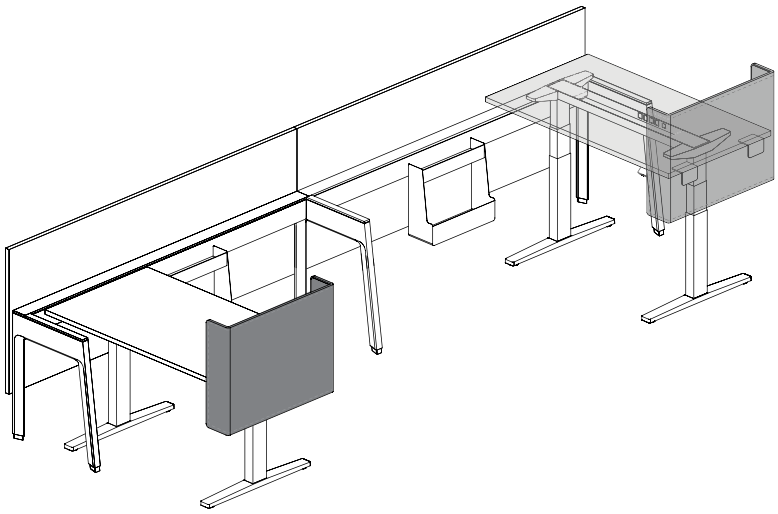

- Can be specified for installation on hiSpace or Navigate Worksurfaces only
- Worksurface mounting hardware is included

casual screens & accessories

casual screens & accessories

UNDERSTANDING CASUAL SCREENS 554

FLOOR SCREEN – FREESTANDING BASICS 555

PLANNING WITH FLOOR SCREENS – FREESTANDING. 556

FUNCTIONAL SCREEN BASICS 559

SIT & SLIDE SCREEN BASICS 560

PLANNING WITH SIT & SLIDE SCREENS 561

CASUAL BOARD BASICS 565

PLANNING WITH CASUAL BOARDS 566

ACCESSORY SCREEN BASICS 570

understanding casual screens

Expansion Cityline offers a variety of casual screens for space division. They provide user partial visual and territorial privacy and a lighter aesthetic for both complementary applications.

Casual Screens can be used in a EZ Fence environment

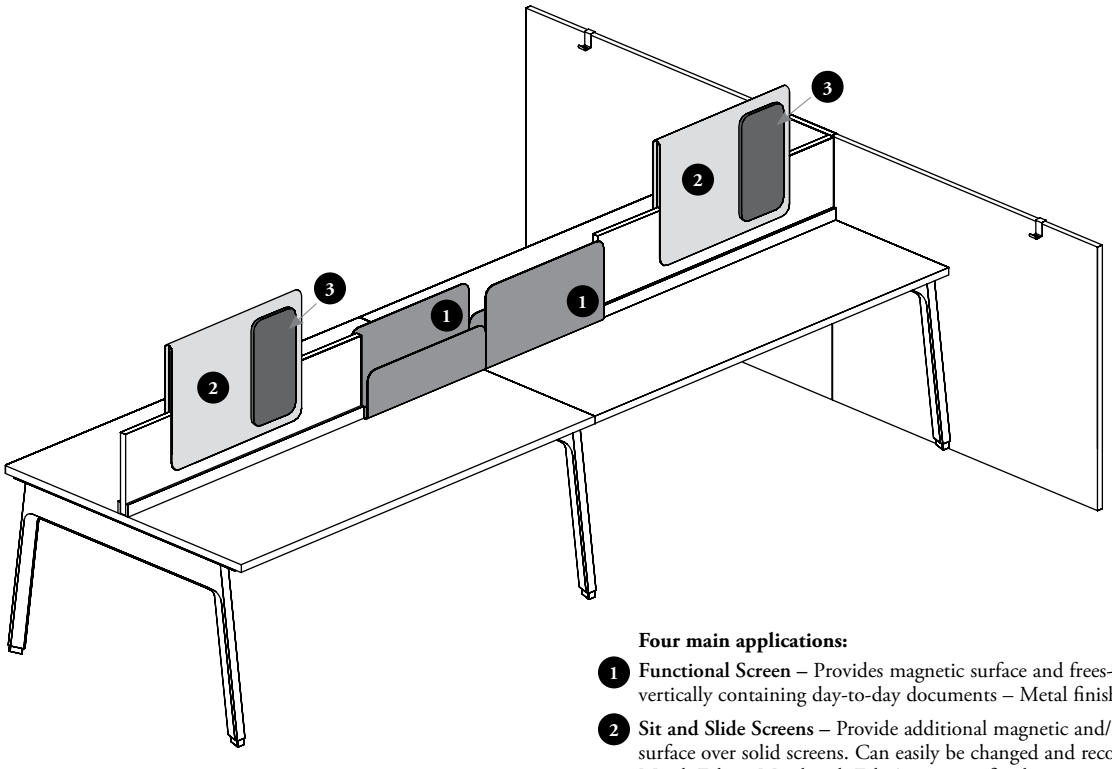

Four main applications:

1. **Functional Screen –** Provides magnetic surface and frees-up the worksurface by vertically containing day-to-day documents – Metal finishes
2. **Sit and Slide Screens –** Provide additional magnetic and/or writable, or tackable surface over solid screens. Can easily be changed and reconfigured without tools – Metal, Felt or Metal with Felt Accessories finishes
3. **Casual Boards –** Provide casual writable and/or magnetic, or tackable surface on front of solid screens or when applicable, Metal Sit & Slide Screens – Glass or Felt finishes
4. **Floor Screen – Freestanding –** Create privacy and physical separation between workstations or corridor while being easily reconfigurable – Solid screen with or without Glass finishes

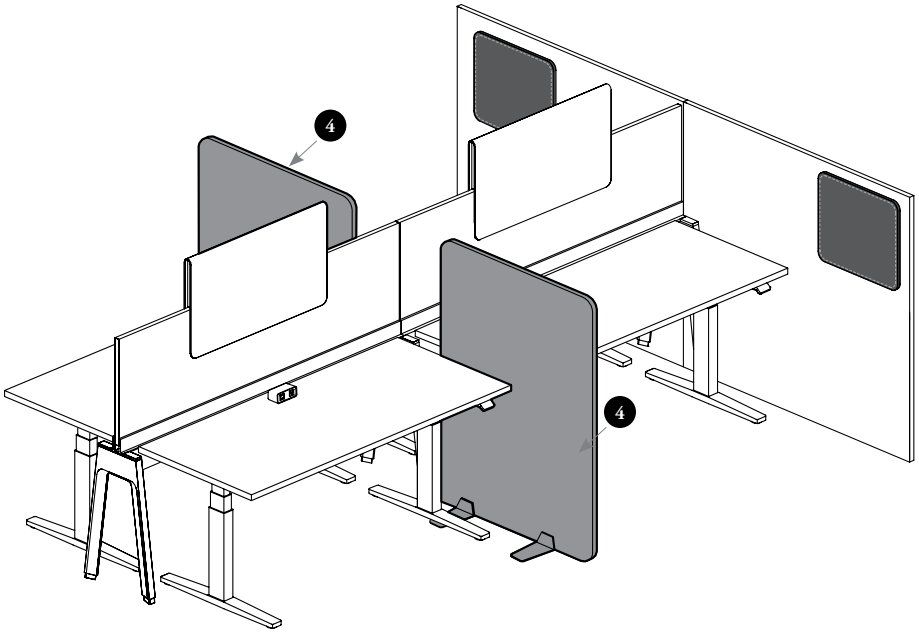

floor screen – freestanding basics

Freestanding Floor Screens are used between Height-Adjustable Tables or at the end of workstations to create partial visual and territorial privacy.

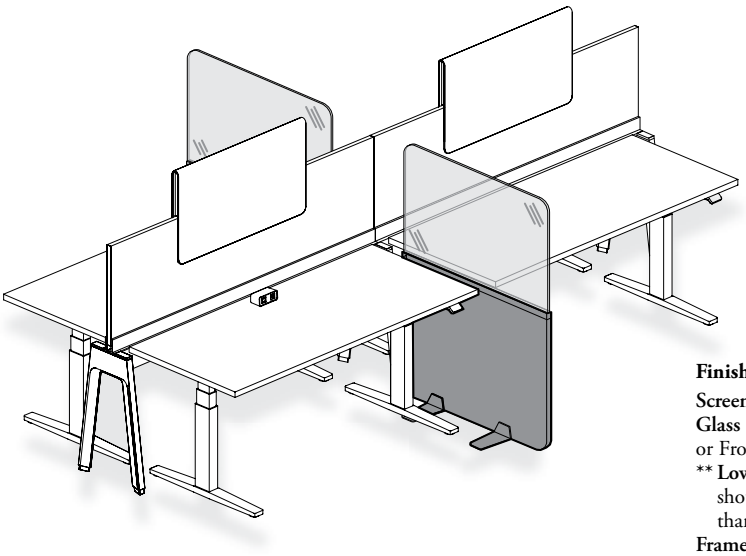

Finishes

Screen Finishes: Source Laminate
Glass Finishes: Clear (CL), Frost, (FT), Satin (FB), Clear – Low Iron (LA)** or Frost – Low Iron (LB)**
** **Low Iron Glass Finishes** reduce the greenish render of standard glass. They should be specified anytime this product is installed on the same workstation than a Glass Elevated Screen
Frame Finishes (If Applicable): Foundation, Mica and Accent
Foot Finishes: Foundation, Mica and Accent

- Comes with two Supporting Feet with Covers
- 42", 51" or 57" high visual screen that provides privacy from floor level
- Does **not** provide support to the worksurface
- Comes with Standard (S) or Radius (R) (Shown) Corner Details

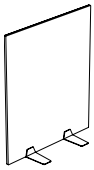

Floor Screen – Freestanding (JNSFSF)

- Widths include 42" – 54" (6" increments)
- Available 1" thick and two-sided finished

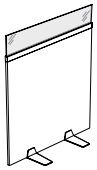

Floor Screen with Glass – Freestanding (JNSFGF)

- Widths include 42" – 54" (6" increments)
- Available with a 1/4" (6 mm) thick tempered glass on top and 1" thick solid two-sided finished on bottom
- 29" glass starting high is available with 42" or 51" datum height
- 42" glass starting high is available with 51" or 57" datum height

feet details

- The foot has a slim profile to minimize interferences with other products
- Are available in 3/16" thick with bumpers for a total thickness of 1/4"
- **Does not** provide leveling

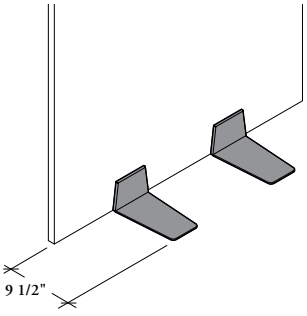

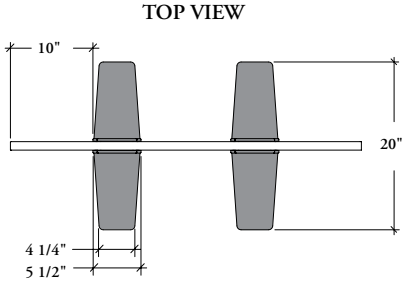

grain direction

- The grain direction on Laminate Solid Screens is **not** directional and always runs horizontal
- On Cathedral Grain the pattern may appear on opposite direction on side by side screen panel

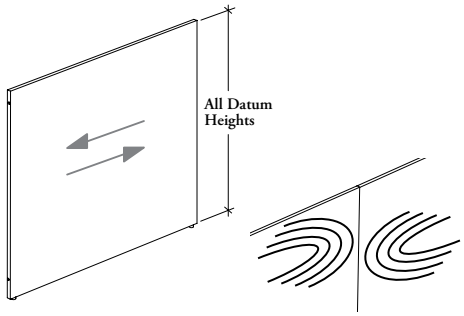

planning with floor screens – freestanding

The following should be considered when planning with Freestanding Floor Screens.

datum heights

- Match Teknion standard datum heights: 42", 51" or 57"
- **Cannot** be linked together
- Due to its design **no** levelers, Freestanding Floor Screen may **not** perfectly align with other products with a wider leveling range
- Are available in the following heights to provide various of privacy

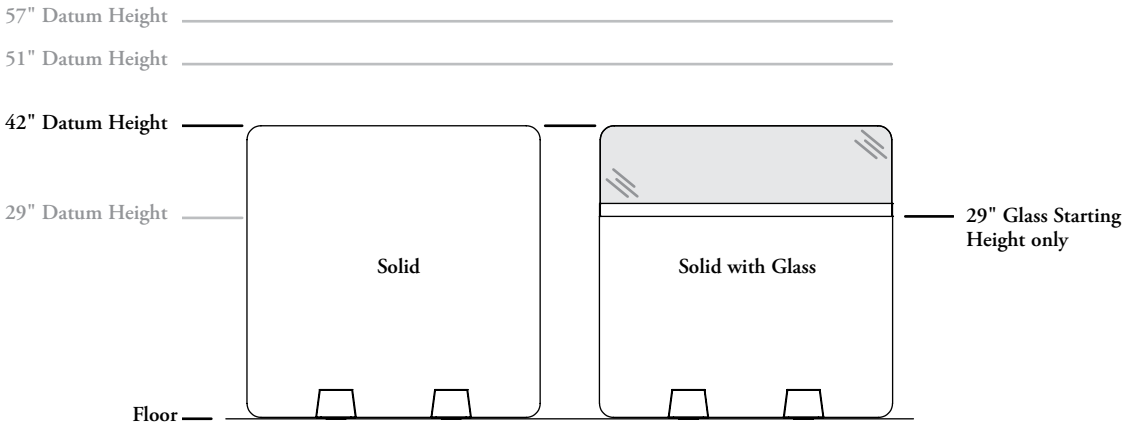

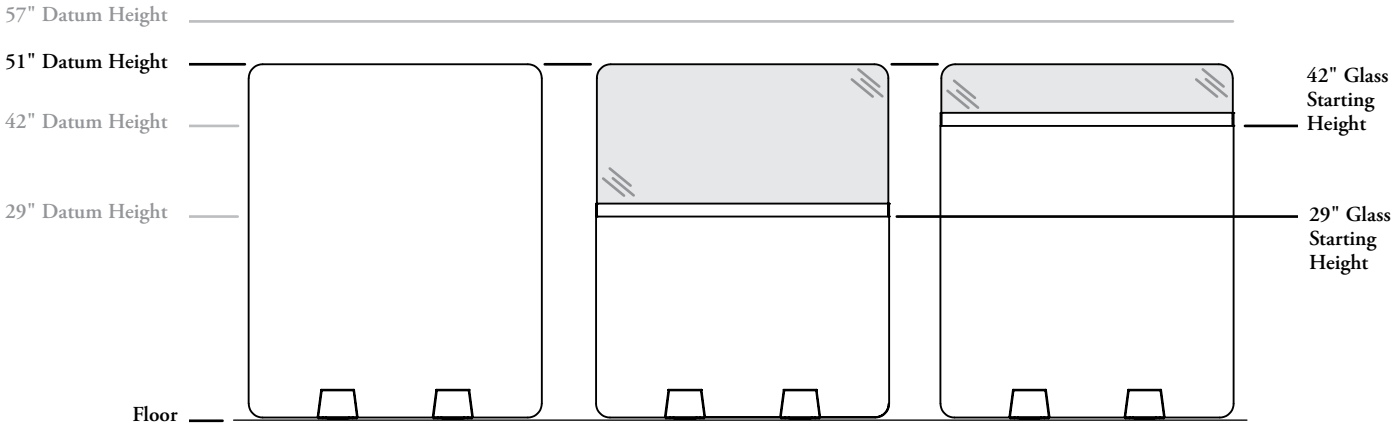

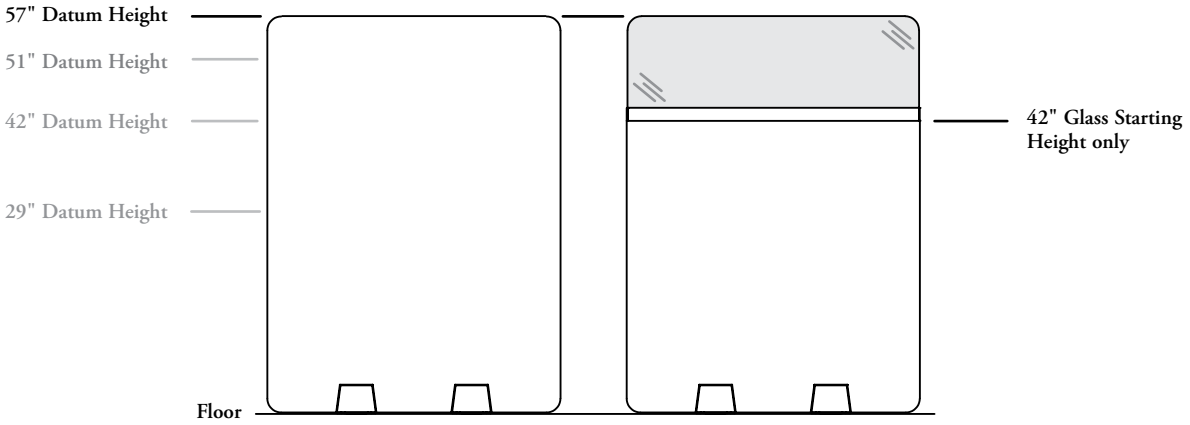

planning with floor screen – freestanding (continued)

Can be used anywhere on a floor plan to provide functional privacy and space division through the workplace.

locations

- Screens can be used in the following locations
- It is **the** only floor screen solution compatible with Low Fence layouts
- When combined with Height-Adjustable Tables, a minimum of **1" gap between the table and the screen must maintained at all time for product security**

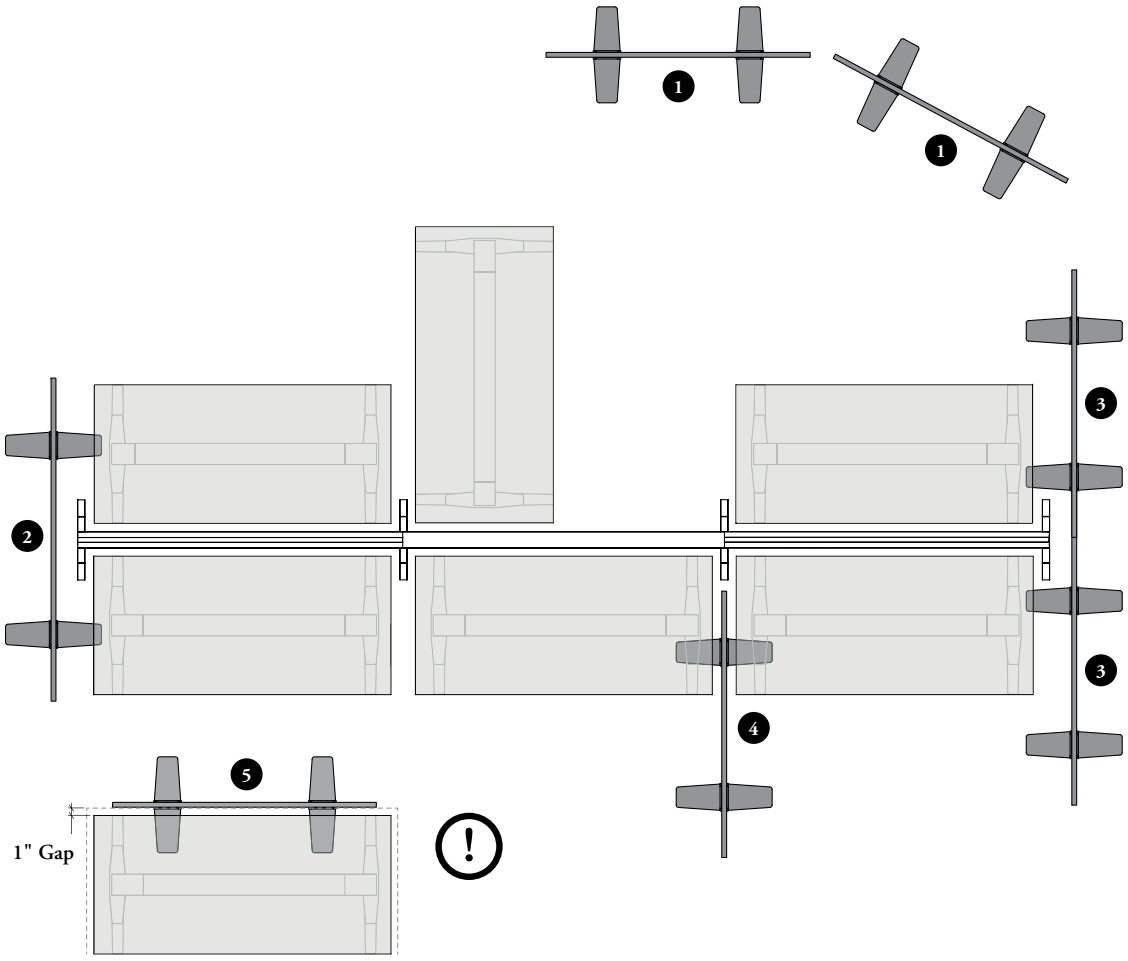

Five positions are allowed:

1. **Workspace Divide –** Can be used to casually divide the workspace, It is **not** required to be connected to a Cityline Structure
2. **End of Workstation** – One screen shared on the outside of two workstations. Mounts centered to the end of a Cityline Fence station. The 54" wide Freestanding Floor Screen will cover a workstation with 23" deep Height-Adjustable Tables parallel to the beam
3. **Side-to-Side –** Two screens can be placed side-to-side on the outside of a Fence Workstation to create an extended territorial division
4. **Between Height-Adjustable Tables –** A Freestanding Floor Screen can be placed between two Height-Ajustable Tables parallel to the beam to separate two users
5. **On-Module with Height-Adjustable Tables –** Can be used on-module behind a Height-Adjustable Table, but will need **to keep a 1" gap between the table and the screen**

planning with floor screens – freestanding (continued)

screen restrictions

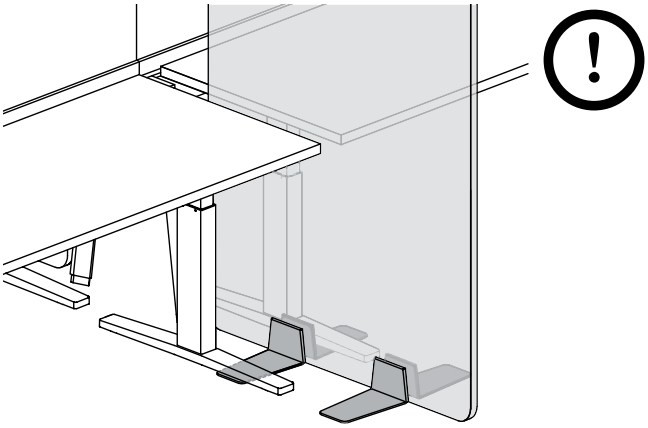

When used between two Height-Adjustable Tables, tables need to be leveled to pass over the Freestanding Floor Screen Foot. The remaining leveling range will be limited

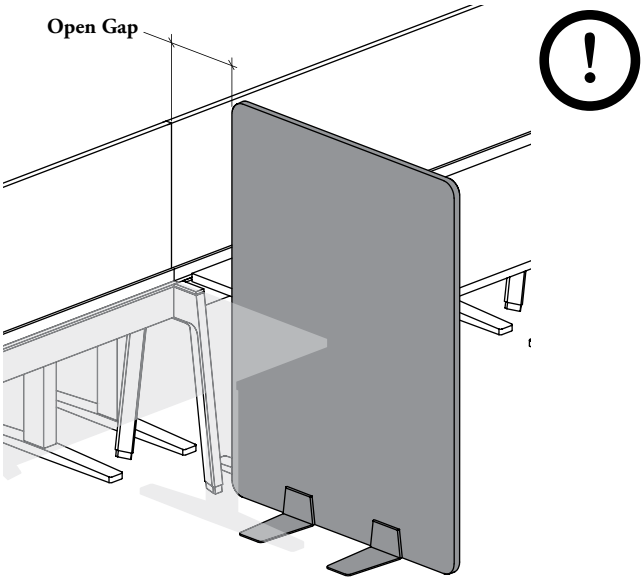

Using a Freestanding Floor Screen in front of a Cityline Fence Leg will leave an open gap between the floor screen and the beam mounted add on screen

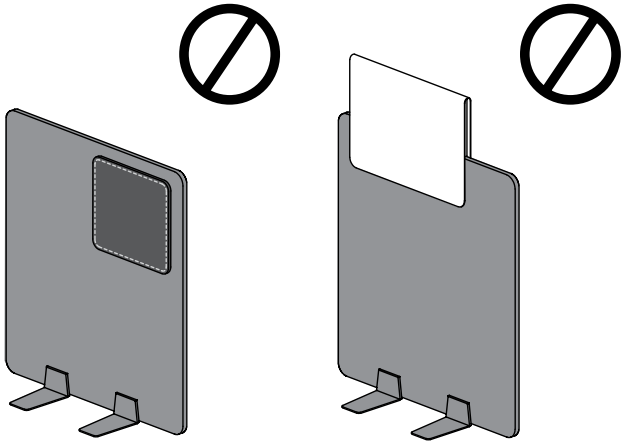

A Casual Board or Sit-and-Slide Screen **cannot** be used with the Freestanding Floor Screen. Stability will otherwise be compromised

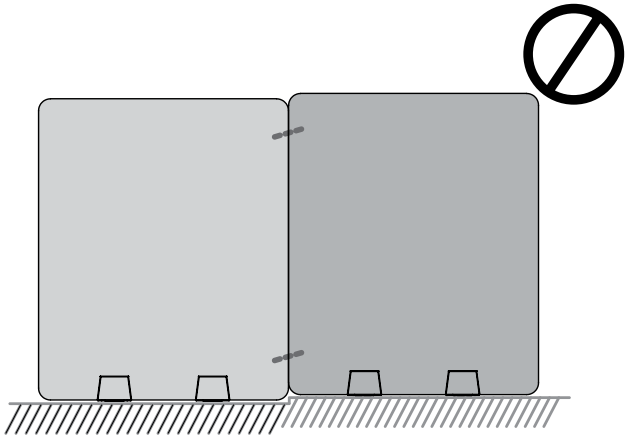

Two Freestanding Floor Screens **cannot** be linked together, therefore uneven building floor may make them look misaligned

functional screen basics

Functional Screen which mounts onto worksurfaces to create partial visual and territorial privacy, provides magnetic surface and frees-up the worksurface by vertically containing day-to-day documents.

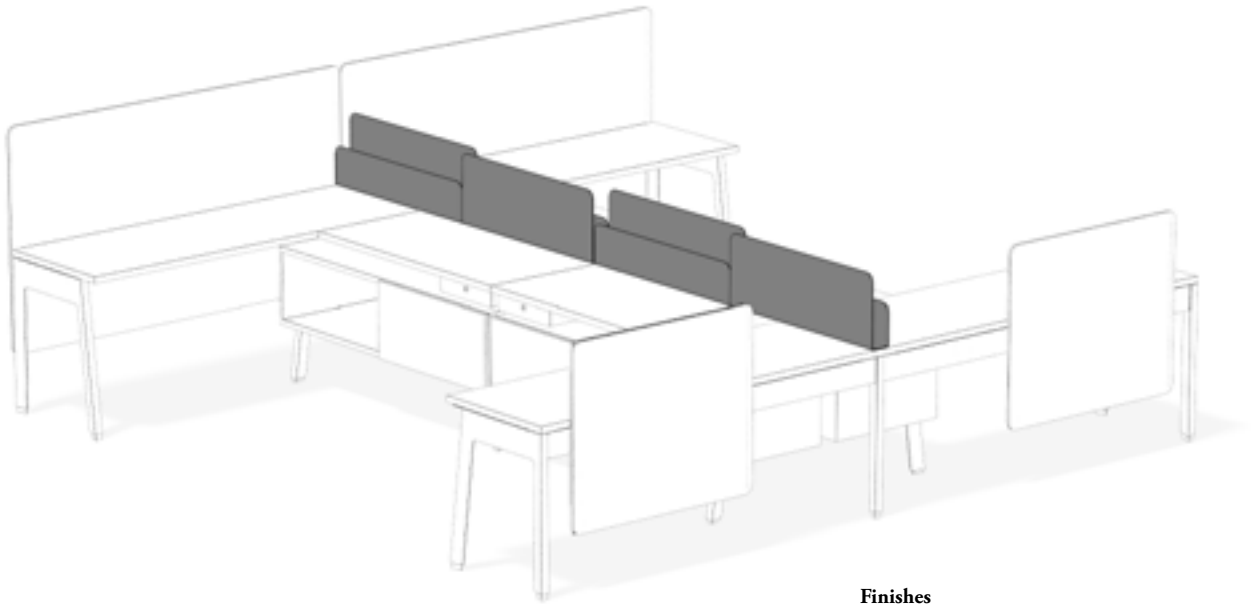

Finishes
Screen Finishes: Foundation, Mica and Accent
Felt Inlay Finishes: Loft

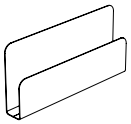

Functional Screen (JNSFM)

- Finish style is available in Standard Paint (S) only
- Available 4" deep only
- Height above worksurface include:
  – 42" high datum
- Widths include 21", 23", 24", 27", 29", 30" – 48" (3" increments) and 54" – 84" (6" increments)
- Permanently screwed on worksurface

applications

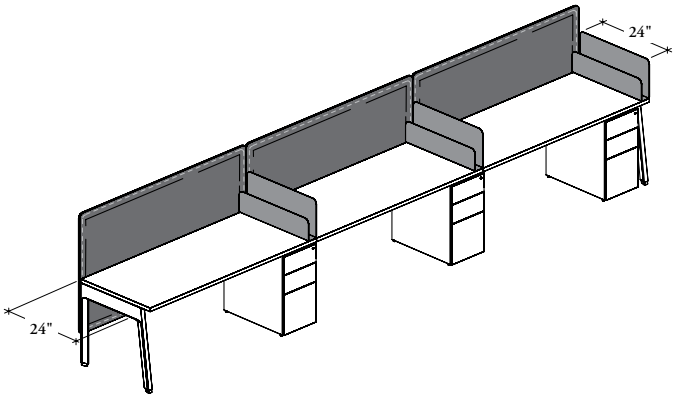

When used with Beam-Mounted Elevated Screens, the Functional Screen can be of same dimension than the worksurface depth

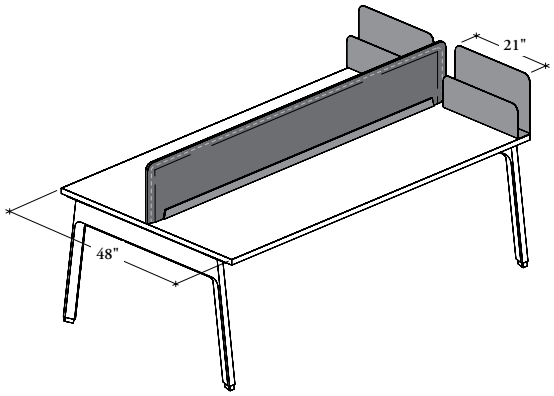

When used with Worksurface- Mounted Add-On Screens, the Functional Screen must be specified one increment shorter than Single-Sided Worksurface depth, and one increment shorter than half worksurface depth in Double-Sided application

sit & slide screen basics

Sit and Slide Screens are installed over solid panels to provide movable visual privacy and/or additional functionality.

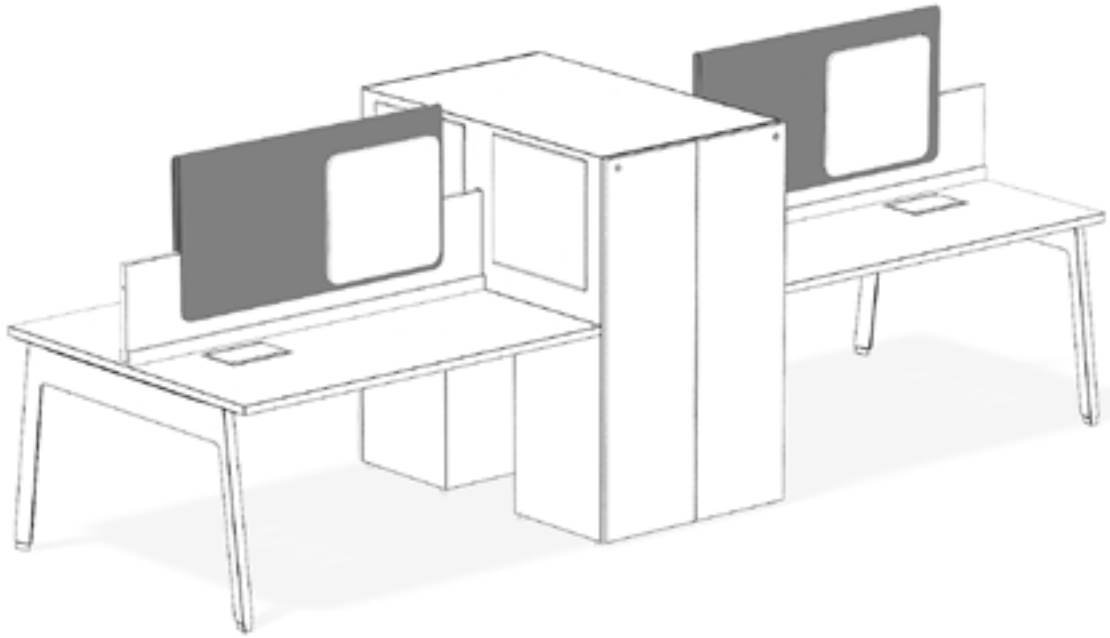

- Provide additional magnetic and/or writable, or tackable surface over solid screens. Can be seated along the top edge of all Solid Screens
- Can easily be changed and reconfigured without tools
- Datum heights include 44", 53" or 59"
- Mount onto solid screen datum heights of 42", 51" or 57" (Base Screen Datum Height). Sit and Slide Screens can only be mounted on a base screen of the same height than the one it is specified for
- Must be specified at least 18" narrower than base screen if at least one of its end would allow a free fall

Sit and Slide Screen – Metal (JNSSM)
(Shown)

- Provides movable visual privacy and available in two finish styles:
  - Standard Paint (S); accepts magnets only on both sides
  - Writable Paint (W); limited offering, provides writable surface and accepts magnets on both sides
- Widths include 24" – 42" (6" increments)
- Only dry erase markers can be used

Screen Finishes: Standard Paint option is available in Foundation, Mica or Accent colors or Writable Paint option is available with Whiteboard (WZ) only

Sit and Slide Screen – Felt (JNSSE)

- Provides movable privacy and tackable surfaces on both sides accommodate the visual display of paper-based information
- Widths include 24" – 42" (6" increments)

Felt Finish: Loft
Stitches Finishes: Carbon Coordinate (C), Shale Coordinate (E), Carrara Coordinate (G) or Umber Coordinate (M)

Sit and Slide Screen with Accessories – Metal (JNSSA)

- Provides movable visual privacy and available in Standard Paint (S) only; accepts magnets on both sides
- The Felt Accessories provide small tackable surface, paper management and storage for small items
- Available 24" wide only
- The Felt Accessories can be specified in Single- (S) or Double-Sided (D) configuration

Screen Finishes: Foundation, Mica and Accent
Accessory Finish: Loft

Standard Paint (S)

Writable Paint (W)

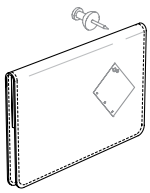

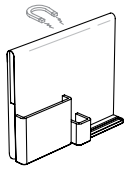

planning with sit & slide screens

The following should be considered when planning with Sit and Slide Screens.

- Sit and Slide Screens are available to be mounted on three Teknion standard datum heights: 42", 51" or 57"
- Sit and Slide Screens can only be mounted on a base screen of the same height than the one it is specified for
- Sit and Slide Screens may impact the stability of workstations, refer to:
  - page 242 Single-Sided Casual Workstation – Desk Structure
  - page 274 for Low Fence – Desk Structure
  - page 280 for Fence – Desk Structure
  - EZ Fence **does not** have stability limitations
- All dimensions are nominal

42" base screen datum height application – standard height beam

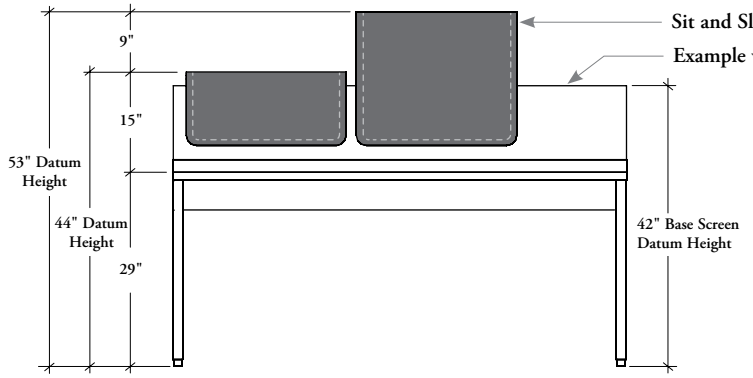

42" high solid screens can accept two Sit and Slide heights:

– 44" high Sit and Slide Screen
– 53" high Sit and Slide Screen

51" base screen datum height application – standard height beam

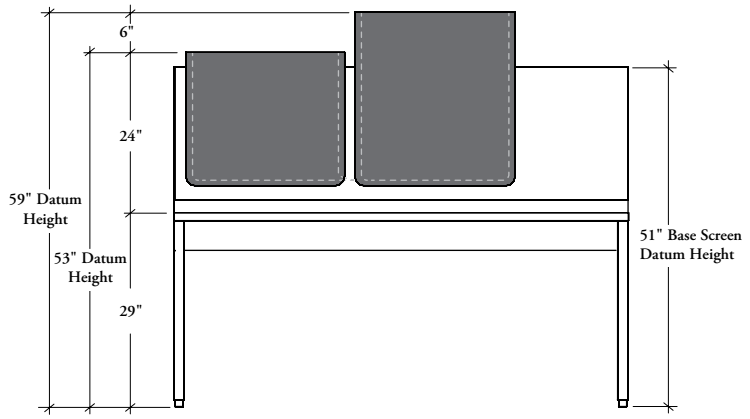

51" high solid screens can accept two Sit and Slide heights:

– 53" high Sit and Slide Screen
– 59" high Sit and Slide Screen

57" base screen datum height application – standard height beam

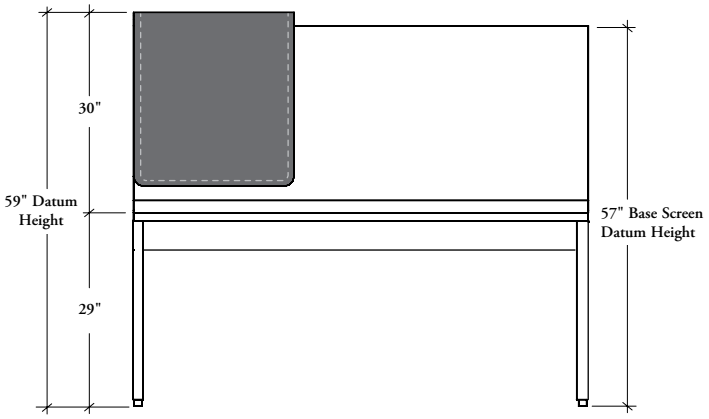

57" high solid screens can accept one Sit and Slide height:

– 59" high Sit and Slide Screen

planning with sit & slide screens (continued)

42" base screen datum height application – low height fence

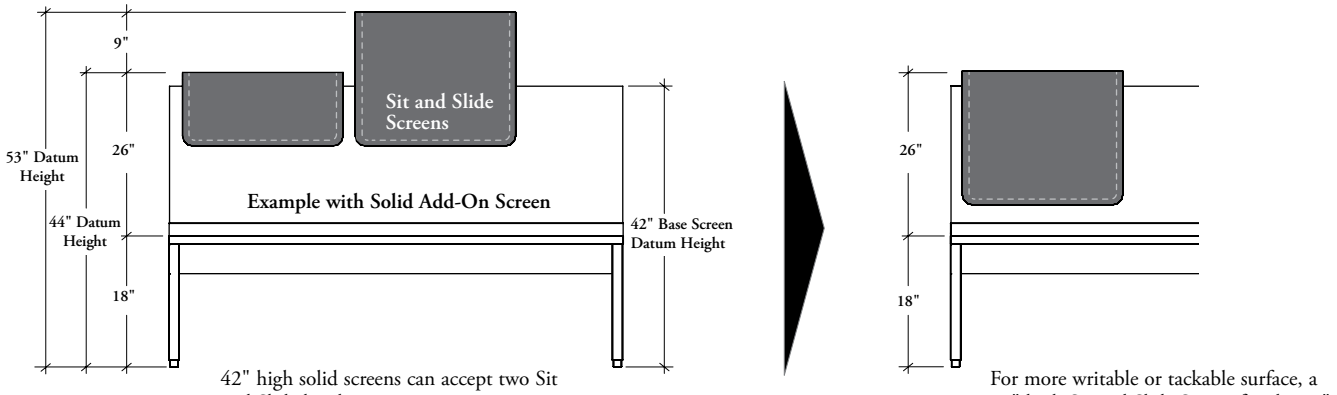

42" high solid screens can accept two Sit and Slide heights:

– 44" high Sit and Slide Screen
– 53" high Sit and Slide Screen

For more writable or tackable surface, a 53" high Sit and Slide Screen for the 51" base screen datum, can be used on 42" high Beam- Mounted Add-On Screen on low height fence

51" base screen datum height application – low height fence

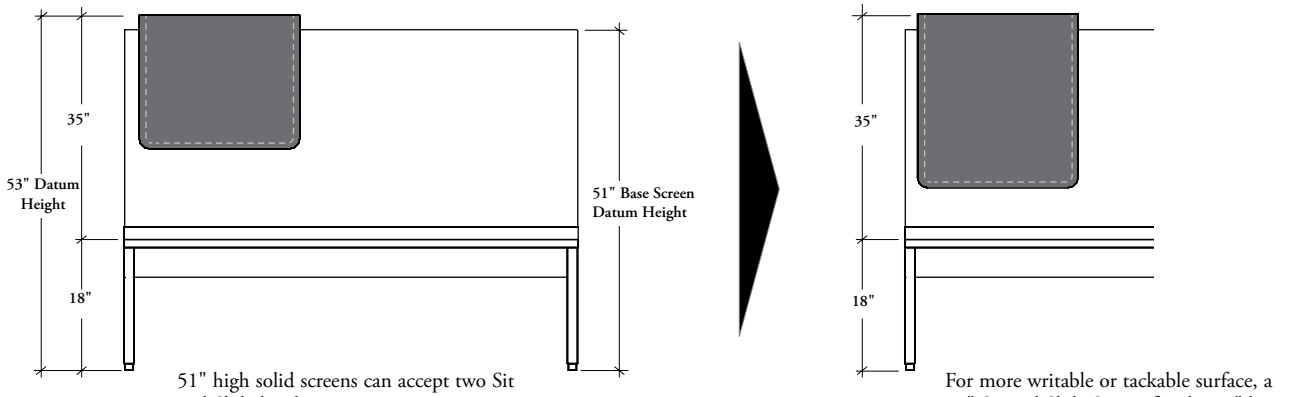

51" high solid screens can accept two Sit and Slide heights:

– 53" high Sit and Slide Screen
– 59" high Sit and Slide Screen

For more writable or tackable surface, a 59" Sit and Slide Screen for the 57" base screen datum, can be used on 51" high Beam-Mounted Add-On Screen on low height fence

planning with sit & slide screens (continued)

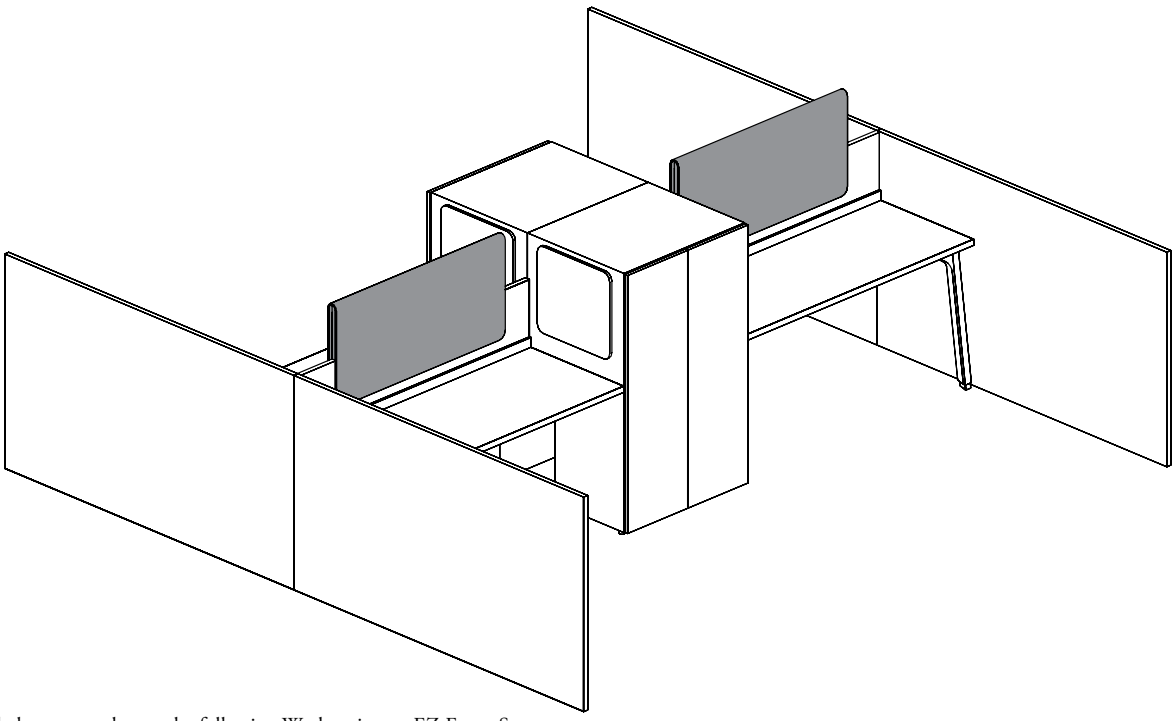

- Can only be mounted onto the following Workstation or EZ Fence Screens:
  - Solid Add-On Screens (JNSASB, JNSASW or JZSASB)
  - Solid Elevated Screens (JNSESB, JNSESW or JZSESB)
  - Solid Floor Screens (JNSFSB, JNSFSW or JZSFSB)
- A Casual Board – Felt can be specified separately and placed on front of a Sit and Slide Screen – Metal for additional functionality. For details, refer to page 566
- Must be specified at least 18" narrower than base screen if at least one of its end would allow a free fall as shown on illustrations below

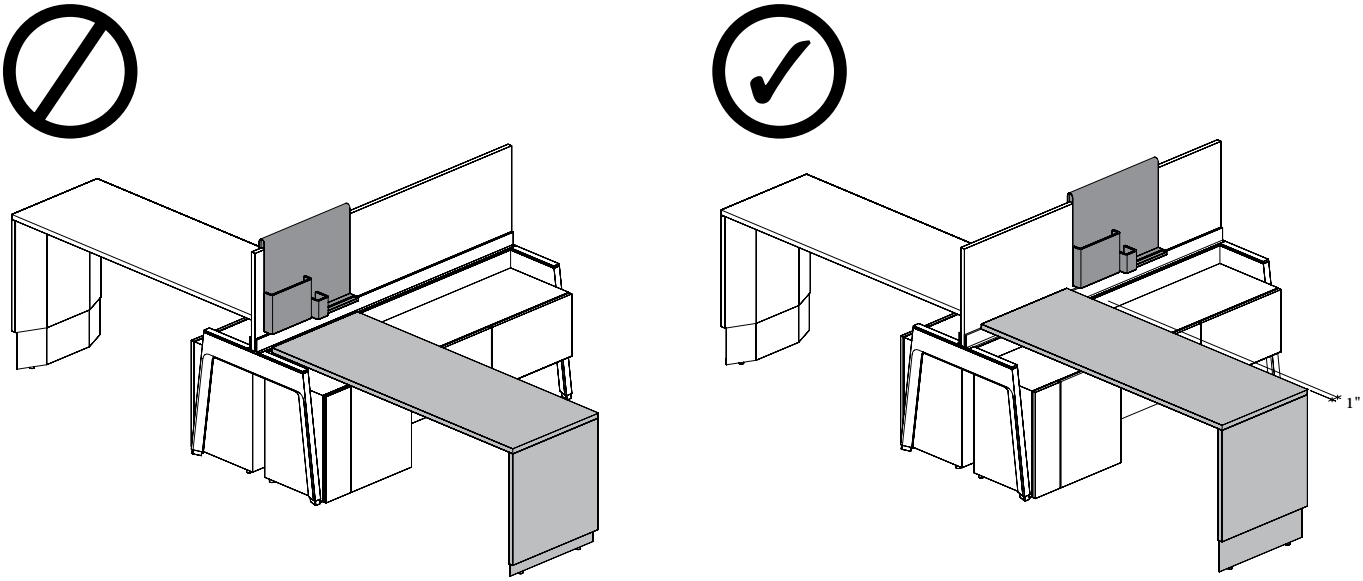

- When planning with height-adjustable run-off, careful consideration must be taken when positioning the accessories close to run-offs. Refer to the Height-Adjustability section for details
- All Sit and Slide Screens can be placed above Height-Adjustable Run-Offs with Bevel Base (JNHB), except Sit and Slides with Accessories – Metal (JNSSA). The end edge of the run-off worksurface interferes with the felt accessories and prevents the up/down movement

planning with sit & slide screens (continued)

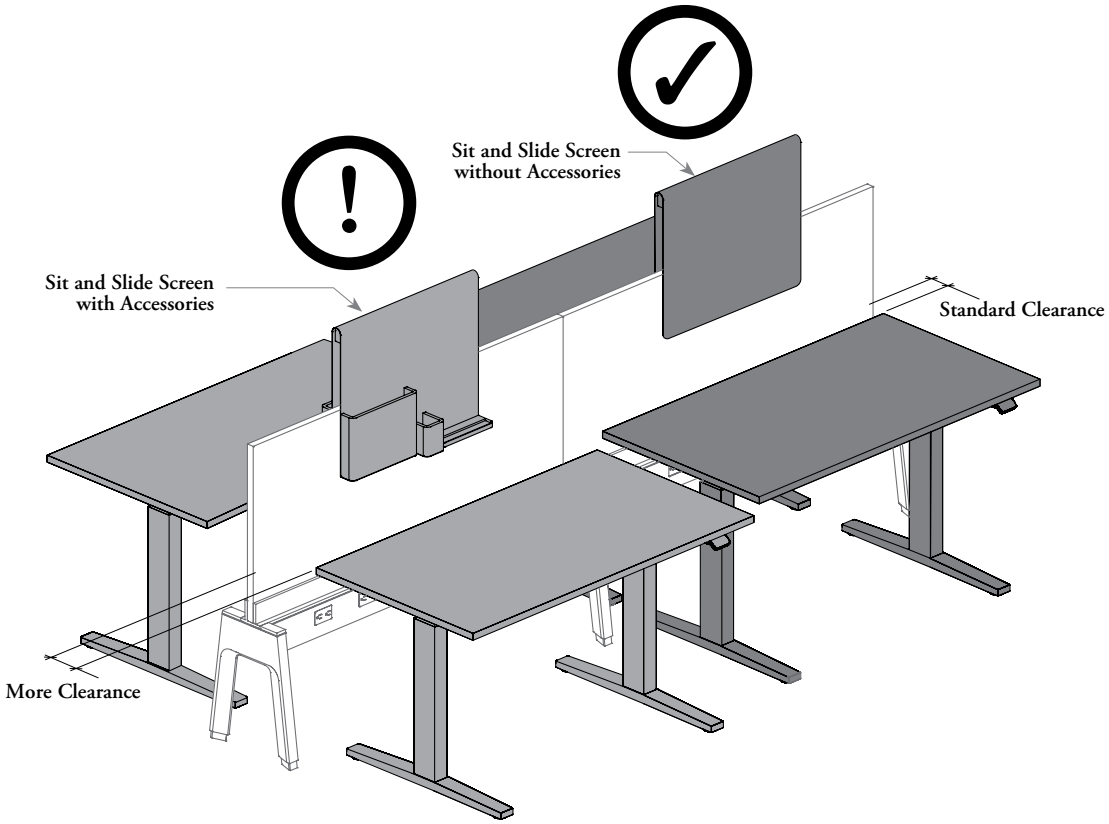

- All Sit and Slide Screens can be placed above hiSpace or Navigate Worksurfaces (JNXRW, JNXCRW, JNXV, JNHWRF, JNHCWRF and JNHV), except Sit and Slides with Accessories – Metal (JNSSA). The end edge or the back edge worksurface interferes with the felt accessories and prevents the up/down movement
- When planning with Sit and Slides with Accessories – Metal (JNSSA), allow more clearance between Height-Adjustable Tables and screen

casual board basics

Casual Boards can be installed on Solid Screens or Freestanding Storage to provide additional functionality.

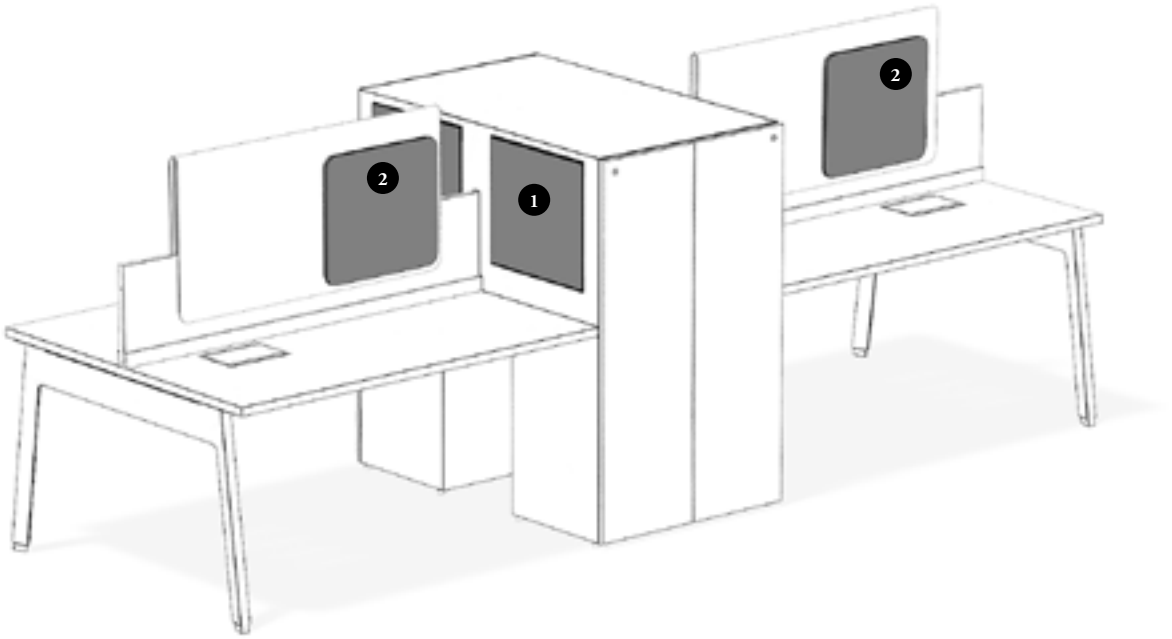

- Provides writable and/or magnetic, or tackable board
- Can be mounted on front of Solid Screens and side of Freestanding Storage with datum heights of 42", 51" or 57"

Casual Board – Glass (JNSCG)

- Are available in two Markerboard Styles:
  - Glass Only (G); erasable message board only
  - Magnetic Glass (M); erasable message board and accepts magnets
- Widths include 12" – 42" (3" increments)
- Available in Radius (R) or Standard (S) corner details
- Tempered glass thickness is 5/32" (4 mm)
- Only dry erase markers can be used

Glass Finish: Back-Painted
Mounting Hardware Finish: Will match the Glass Finish

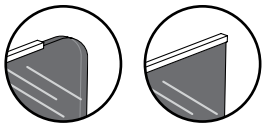

Radius (R) **Standard (S)**

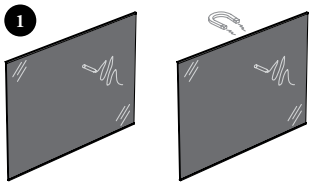

Glass Only (G) **Magnetic Glass (M)**

Casual Board – Felt (JNSCE)

- Provides tackable surface which accommodates the visual display of paper-based information
- Widths include 12" – 42" (3" increments)
- Available in Radius (R) corner detail only

Felt Finish: Loft
Stitches Finish: Carbon Coordinate (C), Shale Coordinate (E), Carrara Coordinate (G) or Umber Coordinate (M)

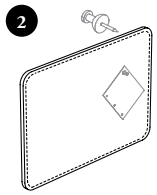

planning with casual boards

The following should be considered when planning with Casual Boards.

- Casual Boards are available to be mounted on three Teknion standard datum heights: 42", 51" or 57"
- A Casual Boards – Glass mounted on the corridor side of Single-Sided Bench or Single-Sided Casual workstation, or Single-Sided EZ Fence will impact its stability. Therefore, it is **not** allowed
- All dimensions are nominal, a gap is intended all around the board
- Only Casual Boards – Felt can be mounted onto Sit and Slide Screens – Metal

42" datum height application – standard height fence

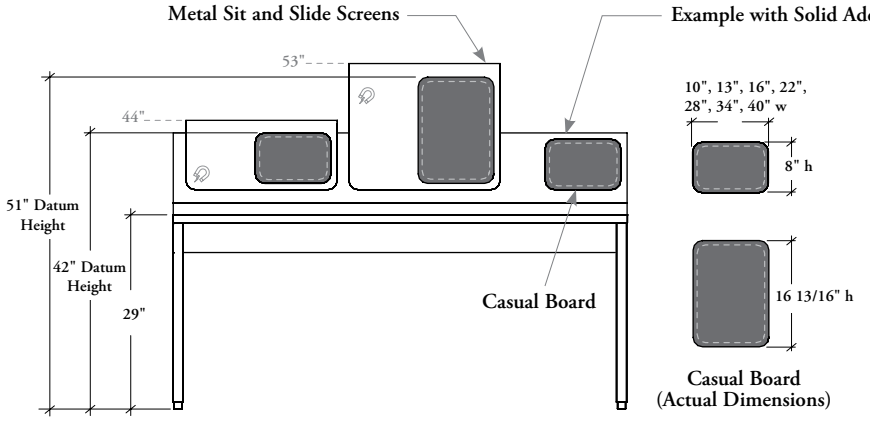

– Specify 42" Casual Board Datum Height when mounted on 42" high solid screen or freestanding storage, or 44" high Metal Sit and Slide Screen

– Specify 51" Casual Board Datum Height when mounted on 53" high Metal Sit and Slide Screen

51" datum height application – standard height fence

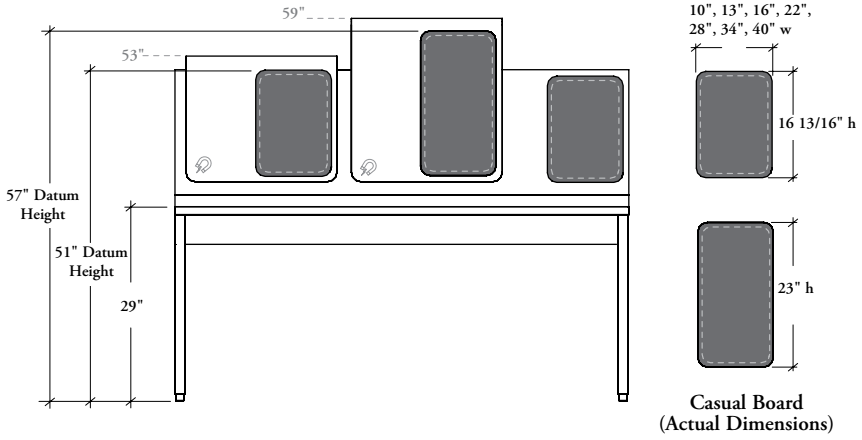

– Specify 51" Casual Board Datum Height when mounted on 51" high solid screen or freestanding storage, or 53" high Metal Sit and Slide Screen

– Specify 57" Casual Board Datum Height when mounted on 59" high Metal Sit and Slide Screen

57" datum height application – standard height fence

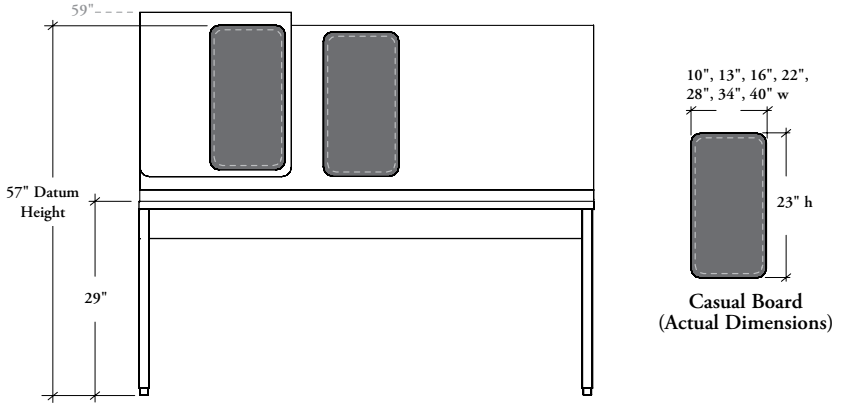

– Specify 57" Casual Board Datum Height when mounted on 57" high solid screen or freestanding storage, or 59" high Metal Sit and Slide Screen

planning with casual boards (continued)

42" datum height application – low height fence

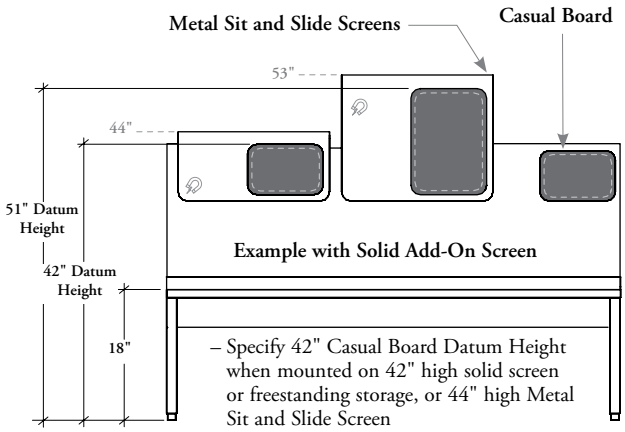

– Specify 42" Casual Board Datum Height when mounted on 42" high solid screen or freestanding storage, or 44" high Metal Sit and Slide Screen

– Specify 51" Casual Board Datum Height when mounted on 53" high Metal Sit and Slide Screen

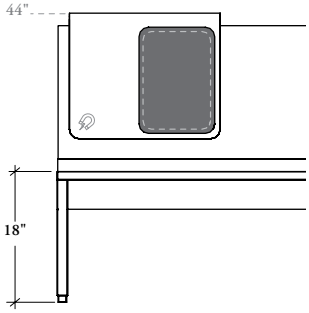

For more writable or tackable surface, a 53" Casual Board Datum Height of the 51" datum height application, can be used on 42" high Beam-Mounted Add-On Screen on low height fence

51" datum height application – low height fence

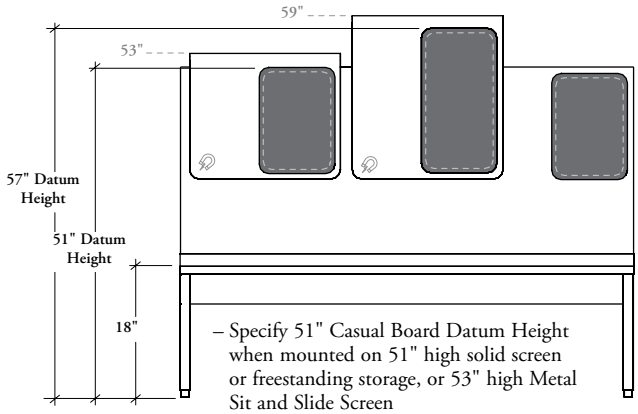

– Specify 51" Casual Board Datum Height when mounted on 51" high solid screen or freestanding storage, or 53" high Metal Sit and Slide Screen

– Specify 57" Casual Board Datum Height when mounted on 59" high Metal Sit and Slide Screen

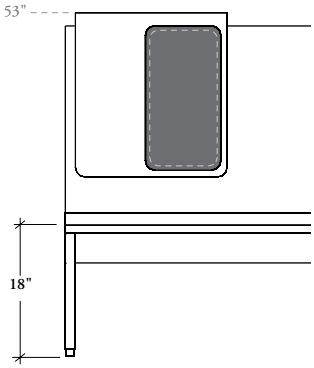

For more writable or tackable surface, a 59" Casual Board Datum Height of the 57" datum height application, can be used on 51" high Beam-Mounted Add-On Screen on low height fence

planning with casual boards (continued)

The Casual Boards can be mounted on three product styles:

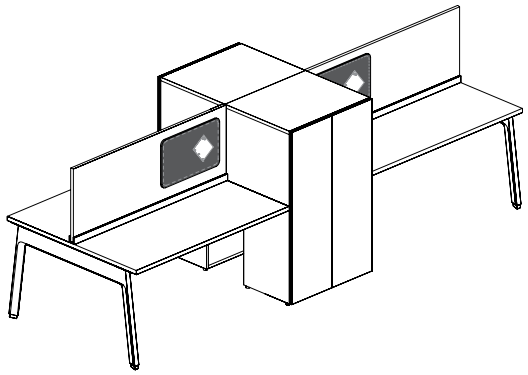

Can be mounted above worksurface and on front of a solid Workstation or EZ Fence Screens listed below:

– Solid Add-On Screens (JNSASB, JNSASW or JZSASB)
– Solid Elevated Screens (JNSESB, JNSESW or JZSESB)
– Solid Floor Screens (JNSFSB, JNSFSW or JZSFSB)
– Solid Floor Screens with Glass (JNSFGB, JNSFGW or JZSFGB) on solid section only
– Solid Floor Screens with Metal Towers (JNSFOL, JNSFOT, JNSFDL, JNSFDT, JNSFTL, JNSFTT, JZSFOP, JZSFDP, or JZSFTP)

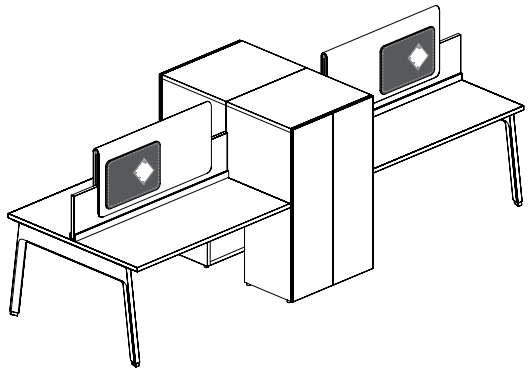

- Casual Board – Felt can be mounted on front of a Metal Sit and Slide Screen (JNSSM) only
- Casual Board – Glass **cannot** be mounted on front of a Metal Sit and Slide Screen (JNSSM)
- All Casual Boards **cannot** be installed on Felt (JNSSE) or Metal Sit and Slide Screen with Accessories (JNSSA)

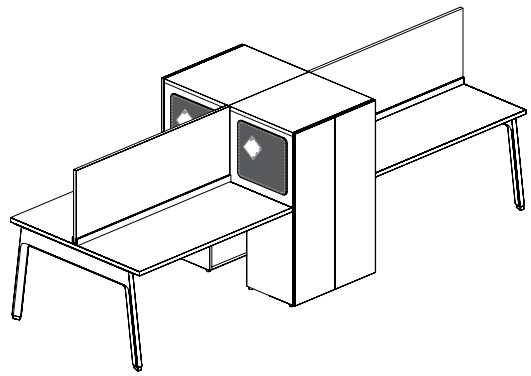

- Can be mounted on side of Freestanding Storage listed below:
  – Bookcase (JNFBL)
  – Beam Towers (JNFBPL, JNFBWF, JNFBS, JNFBG)
  – Dual Beam Tower (JNFBDF,)
  – Freestanding Towers (JNFTPL, JNFTWF, JNFTS, JNFTG, JNFTTS)
- Casual Board are **not** intended to be installed on back of Freestanding Storage

planning with casual boards (continued)

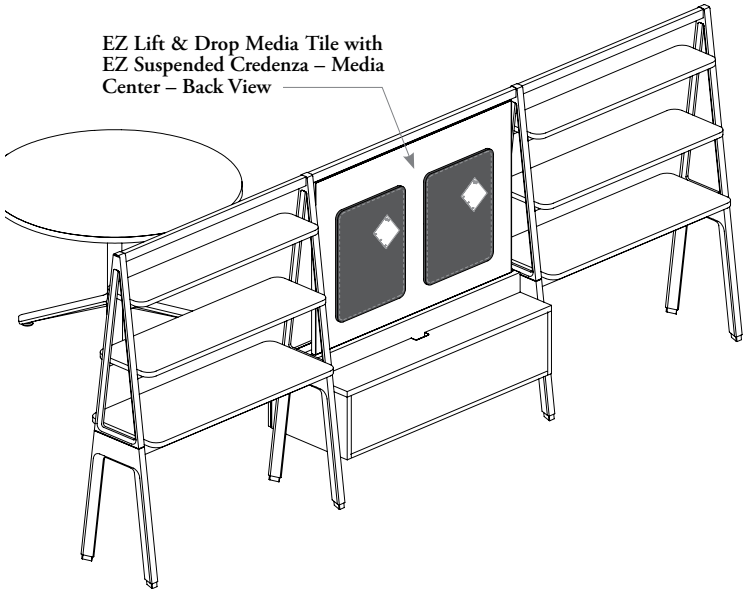

All Casual Boards can only be mounted on front of a Lift & Drop Tiles listed below:

– Solid Lift and Drop Tile (JZTSH)
– Solid Vertical Grain Lift and Drop Tile (JZTSV)
– Solid Lift and Drop Media Tile (JZTSM)

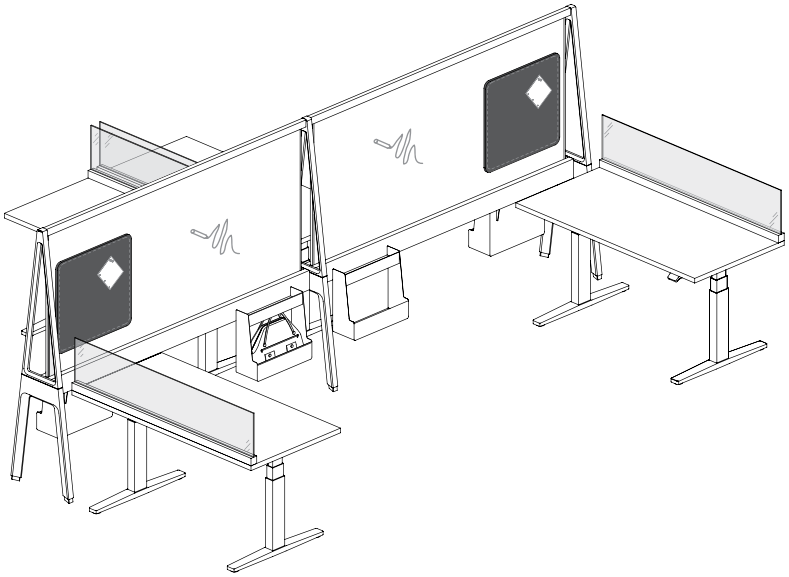

- Casual Board – Felt can be mounted on Lift and Drop Tiles listed below:
  - Lift and Drop Tile – Solid (JZTSH)
  - Lift and Drop Tile – Solid Vertical Grain (JZTSV)
  - Lift and Drop Media Tile – Solid (JZTSM)
  - Lift and Drop Tile – Metal Markerboard (JZTMW)
  - Lift and Drop Tile – Writable Magnetic Glass (JZTGM)
- Casual Board – Glass can be mounted on Lift and Drop Tiles listed below:
  - Lift and Drop Tile – Solid (JZTSH)
  - Lift and Drop Tile – Solid Vertical Grain (JZTSV)
  - Lift and Drop Media Tile – Solid (JZTSM)

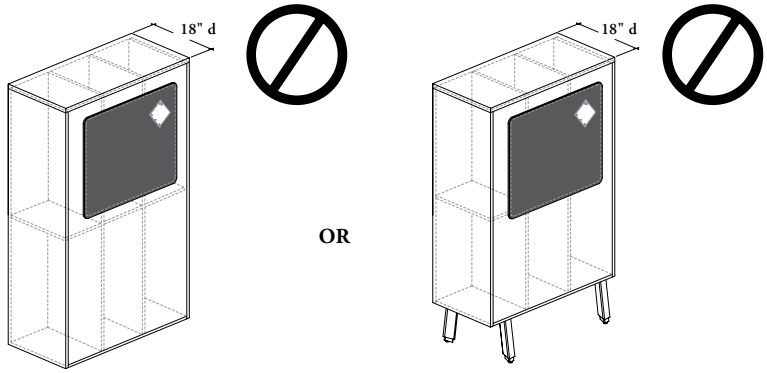

Open Locker

Elevated Open Locker

- A Casual Board **cannot** be mounted on Open Locker (JLFB2 or JLFB3) or Elevated Open Locker (JLEB2 or JLEB3) of 18" deep to maintain stability of storage. 24" depth lockers must be used for this application

accessory screen basics

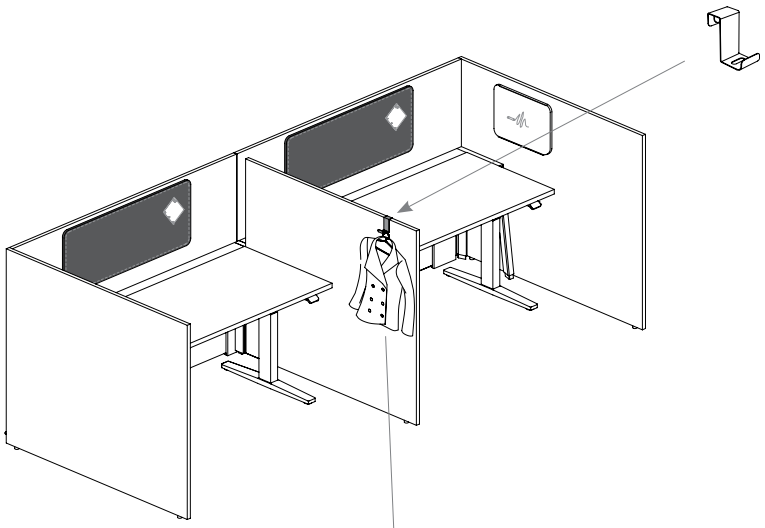

Floor Screen Hook (JNSSH)

- Complementary accessory to add functionality to a 1" thick Solid Floor Screen
- Can support coat, hat and bags of any type (handbag, laptop,etc.)
- Can be moved easily along top of the solid screen (user reconfigurable)
- Has felt pad to prevent damage to the floor screen on which it is used
- Is included with all Floor Screens with Metal Towers – Leg- or Post-Mounted – One or Two Users (JNSFOL, JNSFOT, JNSFDL, JNSFDT, JNSFTL, JNSFTT, JZSFOP, JZSFDP, or JZSFTP) but can also be specified separately on following Solid Floor Screens:
  - Solid Floor Screen – Beam- or Worksurface-Mounted (JNSFSB, JNSFSW or JZSFSB)
  - Solid Floor Screen – Leg- or Post-Mounted (JNSFSL, JNSFST, JZSFSP)

Finishes: Foundation, Mica or Accent colors
Felt Pad: Black

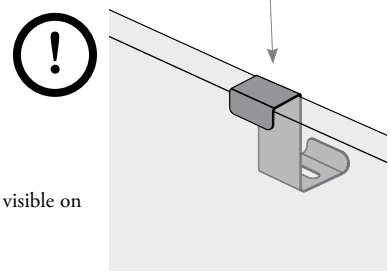

The hook will be visible on the other side

Teknion **does not** recommand the use of the panel hook over the Height-Adjustable Worksurfaces. Damages or personal injuries may occur if accessories are positioned beneath hook

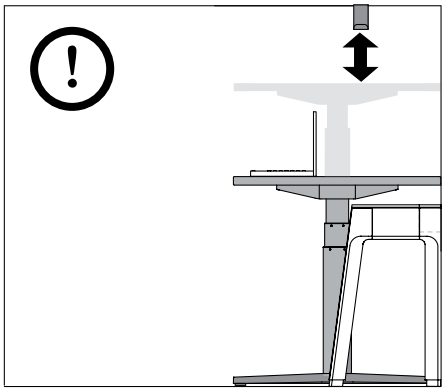

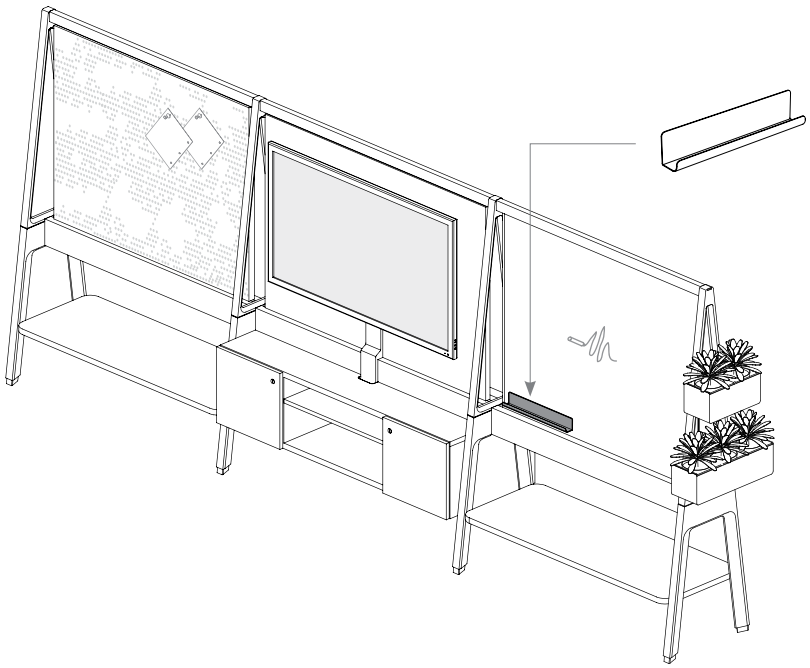

Markerboard Tray (JNSMT)

- Provides storage for up to four dry-erase markers and one eraser
- Can be be installed on a markerboard or other solid surface with Velcro® bands
- Dry-Erase Kit (JNAEK) can be specified separately. Refer to Accessories section, for more details
- NOTE: The position of Markerboard Tray can interfere with Height-Adjustable Table, refer to Height-Adjustability section to ensure to respect the required gap

Finishes: Foundation, Mica or Accent colors

beam-mounted storage

beam-mounted storage

UNDERSTANDING BEAM-MOUNTED STORAGE 574

SUSPENDED STORAGE BASICS 575

PLANNING WITH SUSPENDED STORAGE 576

SUSPENDED CREDENZA BASICS 578

PLANNING WITH SUSPENDED CREDENZAS 580

DRAWER & OPENING SIZING CHART – SUSPENDED STORAGE 588

INTEGRATING ACCESSORIES (OPTIONAL) – SUSPENDED CREDENZA . 593

LOCK CHART – SUSPENDED STORAGE 594

BEAM-MOUNTED CABINET BASICS 596

PLANNING WITH BEAM-MOUNTED CABINETS 597

UNDERSTANDING BEAM-MOUNTED STORAGE – FENCE 600

BEAM-MOUNTED STORAGE – FENCE BASICS 601

PLANNING WITH SHELVES 602

PLANNING WITH LATERAL HANG-ON CABINETS 607

GRAIN DIRECTION – BEAM-MOUNTED STORAGE 609

understanding beam-mounted storage

The desk structure components allow the mounting of a variety of suspended storage creating a functional environment while keeping an impression of lightness.

EZ compatible Only Suspended or Semi-Suspended Credenza (JNBSF, JNBDF, JNBSO, JNBDO, JNBSOO, JNBDOO, JNBSC or JNBDC) are compatible with EZ Fence Structure, refer to EZ Fence Structure section for more details.

Products in this section either need the combination of beams (JNDBB, JNDCB, JZSBB, JZSBS, JZSCB or JZCSC) and legs, or the combination of worksurfaces and legs to be mounted

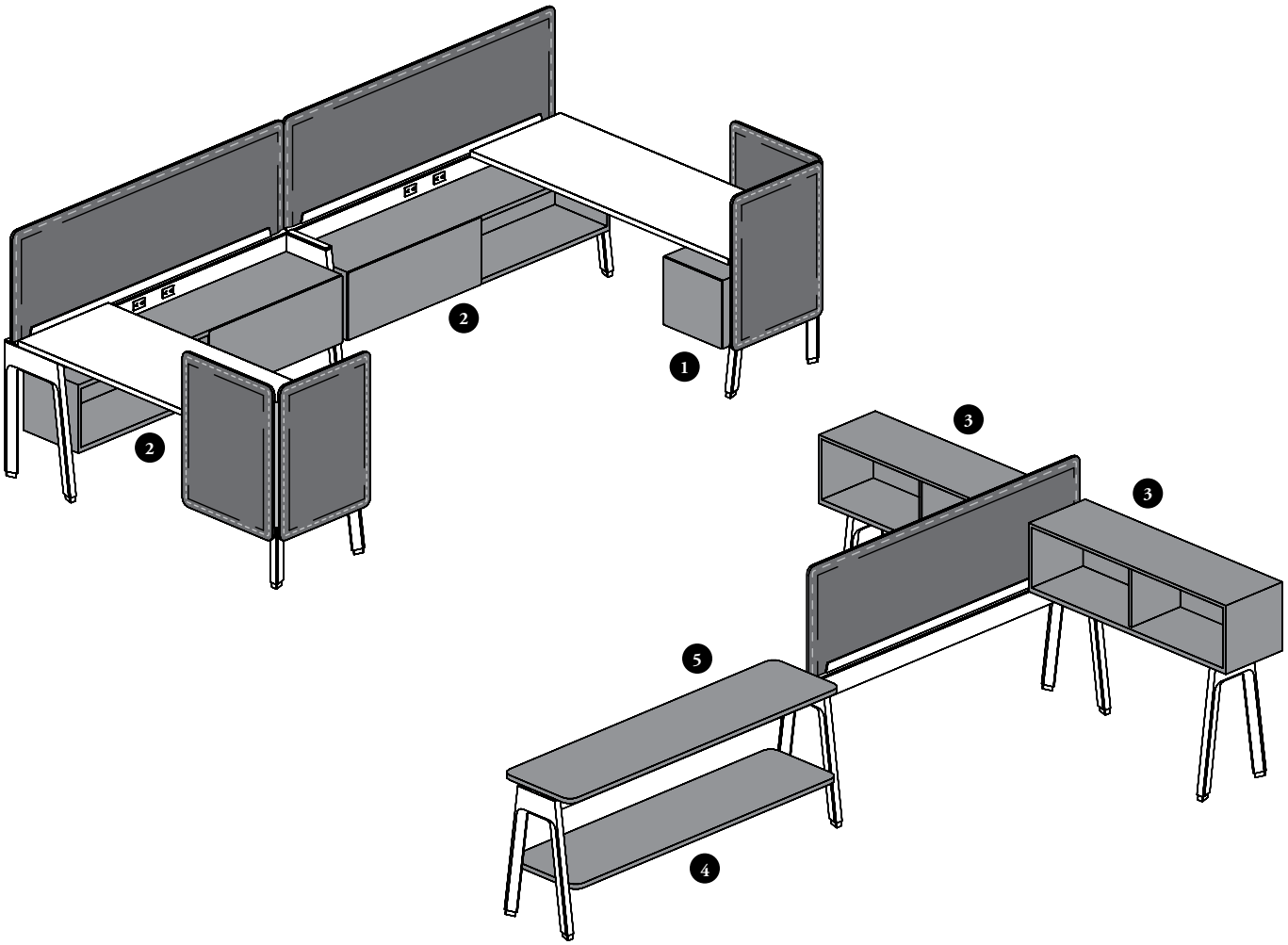

1. Suspended Storage are offered in three configurations to respond to different requirements
2. Credenzas are offered in semi-suspended or suspended style depending on the layout configuration but are always attached in front of beam and on side of structural legs. Credenzas provide high density filing and organized storage and can be mounted with or without a worksurface above
3. Cabinets are offer in two configurations: Beam-Mounted for workstation applications and Lateral Hang-On (Shown) for fence applications. Cabinets Acts as a worksurface level lateral open storage, space division between or at the end of worksations and provides space for casual stand-up meeting in the workstation
4. Suspended Shelf provides open storage below beam
5. Beam-Mounted Shelf provides casual worksurface space at worksurface level

suspended storage basics

Suspended Storage are offered in many configurations and provide storage capacity in compact spaces under the worksurface level.

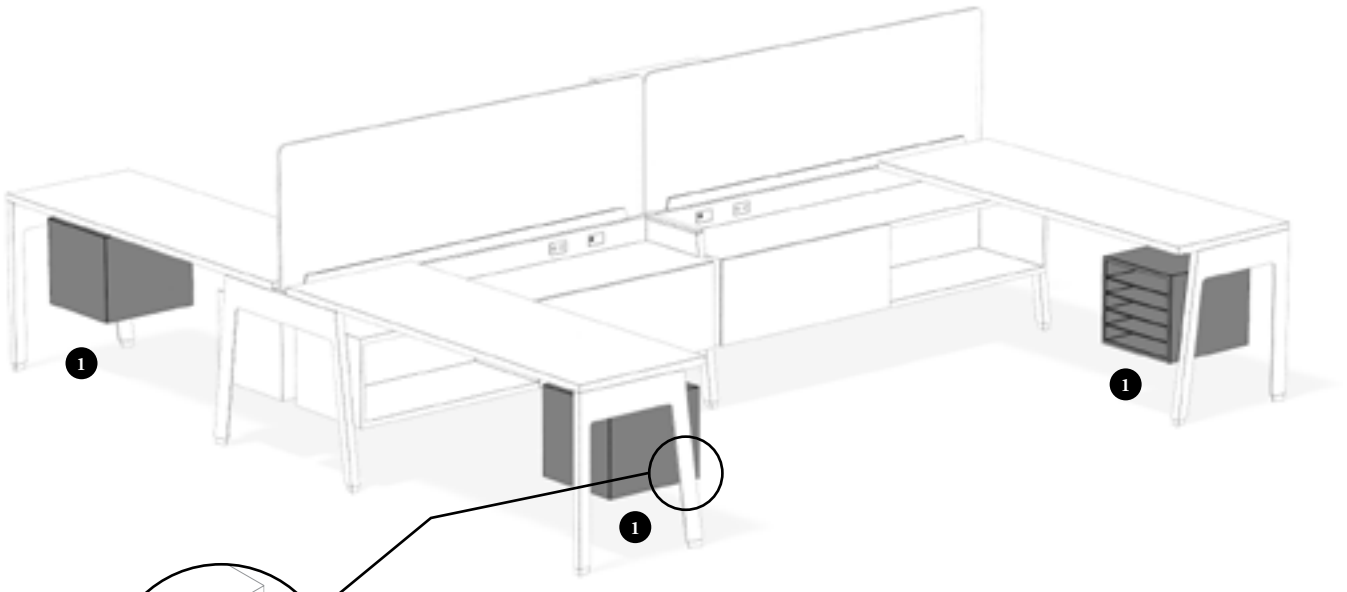

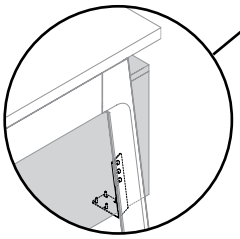

Support Mounting Hardware

Finishes

Case Finishes: Source Laminate
Metal Shelves Finishes: Foundation, Mica and Accent
Metal Front Finishes: Foundation, Mica and Accent
Solid Front Finishes: Source Laminate and Foundation Laminate
Pull Finishes (If Applicable): Foundation, Mica and Accent
Support Mounting Hardware Finishes*: Foundation, Mica, Accent and Coordinate Colors**
* Can be specified to match the case or the leg to which the storage is mounted to
** **Coordinate Colors** are solid colors that can be used to match wood print: Royal Cherry (M8), Ivory Birch (NB), Provincial Oak (NC), Coastal Elm (ND), Espresso Reflect (Q4), Stainless (Q6), Walnut Cathedralgrain (Q7), Mercurial Walnut (Q9), Java Walnut (R7), Urban Walnut (R8), Choice Maple (R9), Estate Cherry (V1), Campus Oak (VD), Flax Reflect (VL), Pecan Reflect (VV), Cocoa Brown Reflect (W8) and Sycamore Reflect (W9)

- Suspended Pedestals require a parallel worksurface and one Structural or Freestanding Leg for the installation
- Available 18" deep and 16" wide only

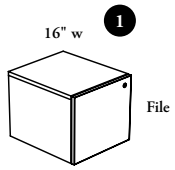

Suspended Pedestal – File Drawer (JNBP)

- This pedestal provides a suspended filing or piling storage unit under a worksurface
- Front Style is available in Metal (M), Metal with Pull (N), Solid (S) or Solid with Pull (T) styles
- Drawer comes with Cityline Recessed (C) pull, when Front Style (N or T) is specified
- Drawer is available with or without lock
- Drawer is equipped with touch-to-open slides

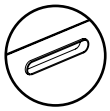

Cityline Recessed (C)

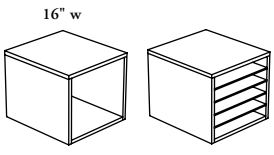

Open (O) Shelves (S)

Suspended Cubby (JNBC)

- This pedestal provides an open storage or a pigeonhole unit under a worksurface
- Cubby configuration is available Open (O) or with Shelves (S)

planning with suspended storage

The following must be considered when planning Suspended Storage in Expansion Cityline.

- Suspended Storage (JNBP, JNBC) can be mounted on side of Structural Legs (JNDPF, JNDLS, JNDLD, JNDBS) and Freestanding Legs (JNALS, JNALD). structural beam is **not** mandatory but the worksurface is
- Suspended Storage **cannot** be mounted on 18" Single-Sided and 36" Double-Sided deep Structural Legs

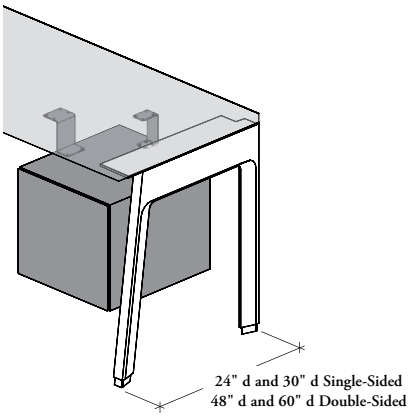

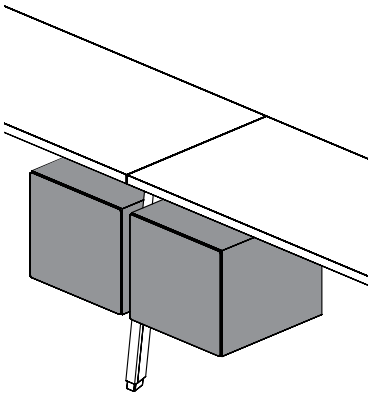

In-Line configurations can accept Suspended Storage on both sides but they **cannot** be configured recessed with the worksurface

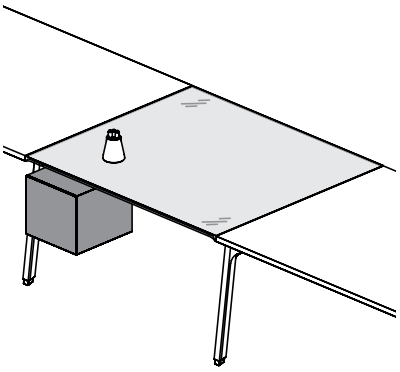

Suspended Storage **cannot** be installed underneath a writable glass worksurface

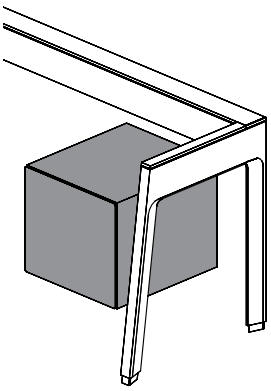

Suspended Storage **cannot** be used with an exposed beam, a worksurface is required to support storage

planning with suspended storage (continued)

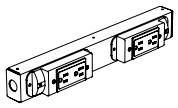

Receptacle Outlets included with Chicago Power Box (JNEPCB)

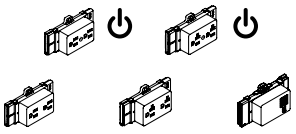

Receptacle Outlets (JNEPRO)

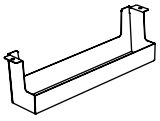

Cable Tray for Access Door (JNEWMT)

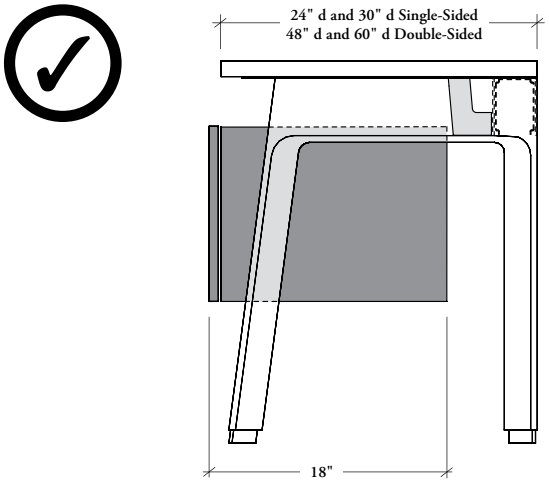

- Suspended storage units allow access to beam Receptacle Outlets (JNEPRO) mounted on the Facing Sides Power Box (JNEPBB) and to outlets of the Facing Sides Chicago Power Box (JNECPBB) only
- Suspended Cubby (JNBC) or Suspended Pedestal (JNBP) can be used in combination with Cable Tray for Access Door (JNEWMT)

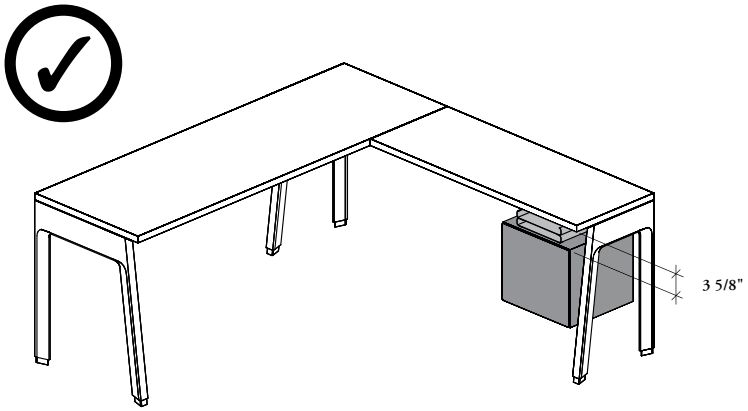

Suspended Pedestal/Cubby used under a Worksurface creates a pigeonhole space that allows laying a Drawer Module (JNAMD) or up to two stacked Tray Modules (JNAMT) or Utility Box (JNAUB)

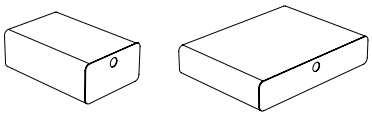

Drawer Module (JNAMD)

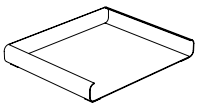

Tray Module (JNAMT)

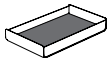

Utility Box (JNAUB)

suspended credenza basics

Suspended Storage are offered in many configurations and provide storage capacity in compact spaces under the worksurface level.

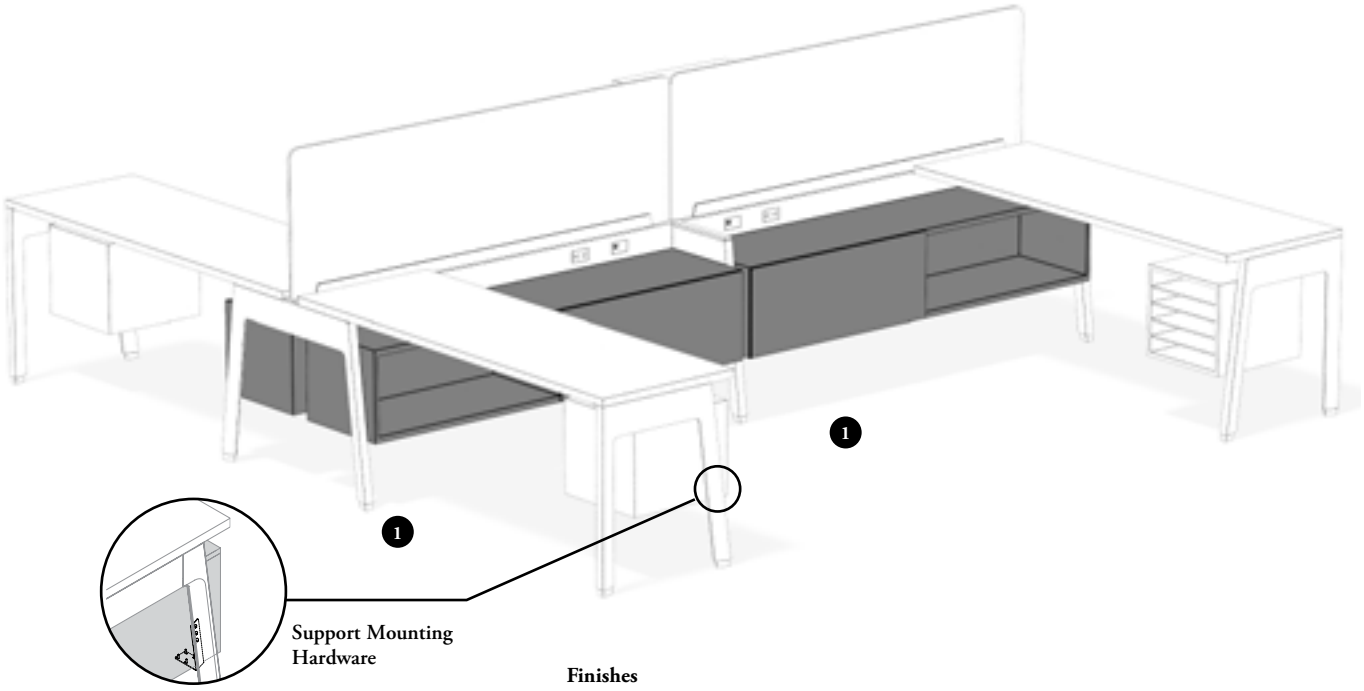

Support Mounting Hardware

Finishes

Case Finishes: Source Laminate
Metal Front Finishes: Foundation, Mica and Accent
Solid Front Finishes: Source Laminate and Foundation Laminate
Pull Finishes (If Applicable): Foundation, Mica and Accent
Support Mounting Hardware Finishes*: Foundation, Mica, Accent and Coordinate Colors**
* Can be specified to match the case or the leg to which the storage is mounted to
** **Coordinate Colors** are solid colors that can be used to match wood print: Royal Cherry (M8), Ivory Birch (NB), Provincial Oak (NC), Coastal Elm (ND), Espresso Reflect (Q4), Stainless (Q6), Walnut Cathedralgrain (Q7), Mercurial Walnut (Q9), Java Walnut (R7), Urban Walnut (R8), Choice Maple (R9), Estate Cherry (V1), Campus Oak (VD), Flax Reflect (VL), Pecan Reflect (VV), Cocoa Brown Reflect (W8) and Sycamore Reflect (W9)

- Suspended and Semi-Suspended Credenzas **cannot** be mounted on Freestanding Legs
- Suspended and Semi-Suspended Credenza can be used in both fully concealed and exposed beam applications
- Must be mounted on Structural Beam and must be specified accordingly for Single- (S) or Double-Sided (D) beam (Desk Structure: (JNDBB or JNDCB); EZ Fence Structure (JZSBB, JZSBS, JZSCB or JZCSC))
- Front Style is available in Metal (M), Metal with Pull (N), Solid (S) or Solid with Pull (T) styles
- Drawers come with Cityline Recessed (C) pull, when Front Style (N or T) is specified
- Available in 18" and 24" depths to fit with 18" and 24" deep Single-Sided or 36" and 48" deep Double-Sided Structural Legs or EZ Structural Legs

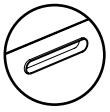

Cityline Recessed (C)

suspended credenza basics (continued)

Suspended Credenzas EZ compatible

- This credenza must be mounted on-module between two Structural Legs and on front of structural beam providing high density filing and organized storage
- The Width Reduction option must be specified accordingly with the encroachment of legs on both sides. Refer to the following page for details

Lateral File (JNBSF)
- Widths include 24" – 72" (6" increments)

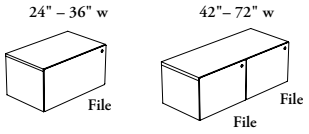

Open with Lateral File (JNBSO)
- Widths include 42" – 84" (6" increments)
- Available in Drawer on Left/Right orientations

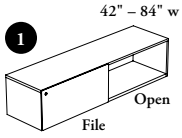

Open (JNBSOO)
- Widths include 24" – 84" (6" increments)

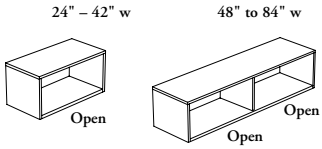

Open with Combo File (JNBSC)
- Widths include 54" – 84" (6" increments)
- Available in Drawers on Left/Right orientations

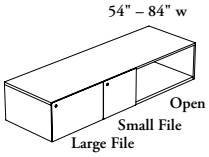

Semi-Suspended Credenzas EZ compatible

- This credenza must be mounted off-module, installed on side of one Structural Leg and on front of one structural beam providing high density filing and organized storage
- Semi-Suspended Credenza are available with One Foot (O) or Two Feet (T) option depending on the desk structure configuration used in the workstation. Refer to page 581 for details

Lateral File (JNBDF)
- Widths include 24" – 72" (6" increments)

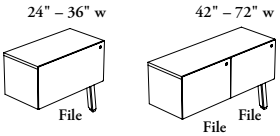

Open with Lateral File (JNBDO)
- Widths include 42" – 84" (6" increments)
- Available in Drawer on Left/Right orientations

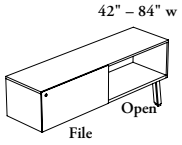

Open (JNBDOO)
- Widths include 24" – 84" (6" increments)

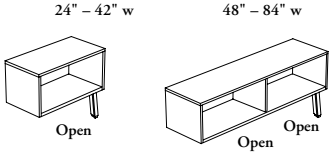

Open with Combo File (JNBDC)
- Widths include 54" – 84" (6" increments)
- Available in Drawers on Left/Right orientations

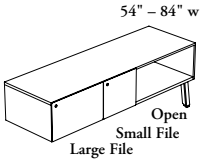

planning with suspended credenzas

The following must be considered when planning Suspended Credenzas in Expansion Cityline.

suspended credenza width reduction

- Three Width Reduction options out of five are shown below. The None/Shared Leg (NH) option occurs when one leg on one side is shared between two nominal workstation footprints and when the other leg is shifted in the next nominal footprint. The None Leg (NN) option occurs when both legs are shifted toward the other workstation on both sides
- The None (NN) option is the only suspended credenza width reduction that is compatible with EZ Fence Structure. For more details, refer to EZ Fence Structure section
- The Shared Legs_None/Full Leg (HH) Width Reduction option is applicable in two leg encroachment conditions:
  - Both legs are shared between two nominal workstation footprints (shown below)
  - One leg on one side is fully included in the nominal footprint of the specified workstation and the other leg is shifted in the next nominal footprint (shown at bottom)

fully concealled application

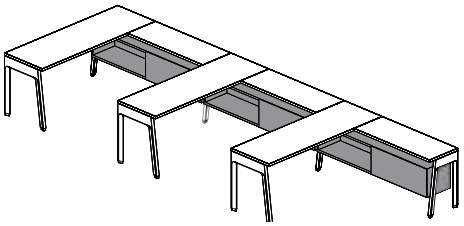

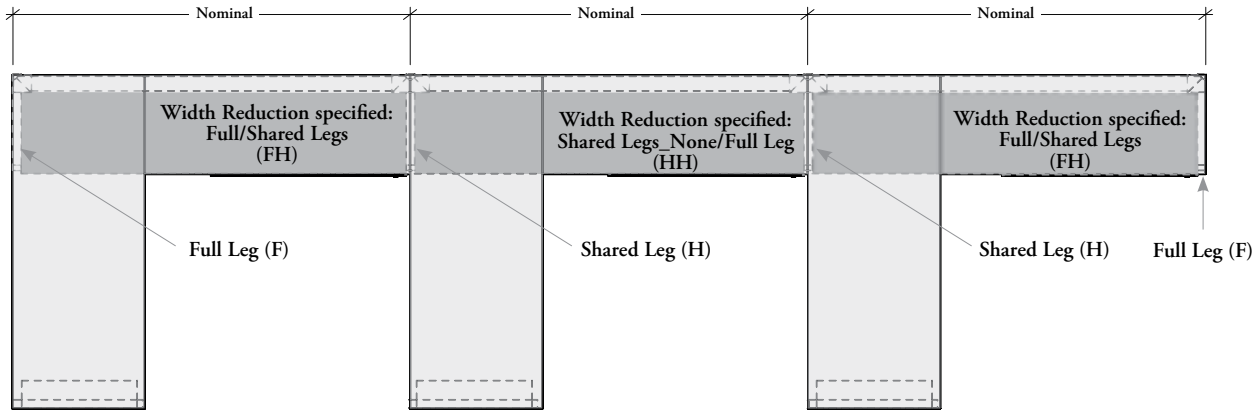

exposed beam application

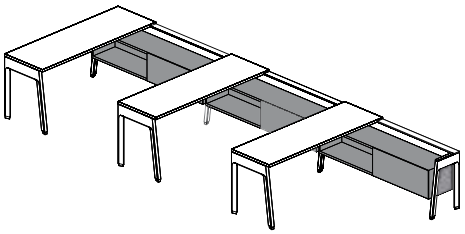

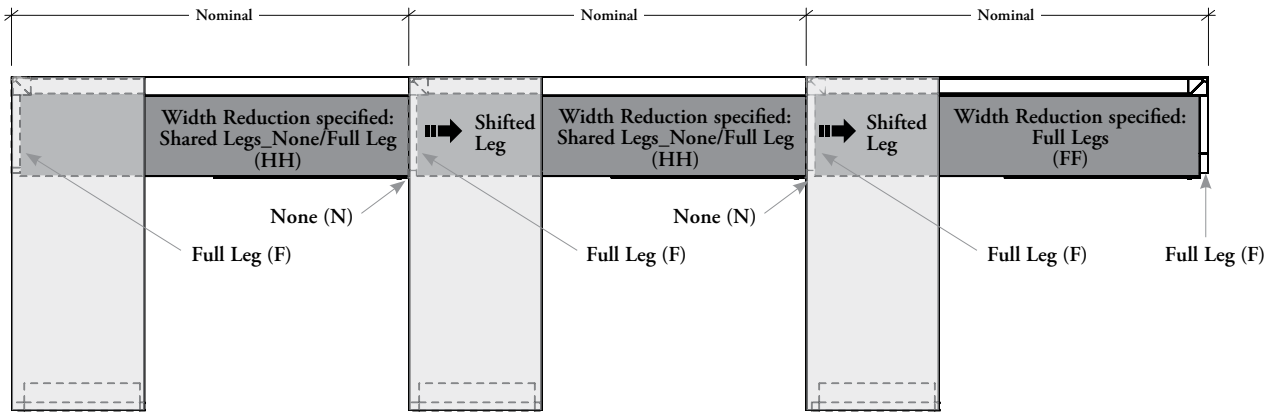

planning with suspended credenzas (continued)

semi-suspended credenza applications

off-module application

Semi-Suspended Credenza can be used to create an off-module application. This especially occurs when another structural beam or a worksurface runs off the structural beam to which the credenza is mounted

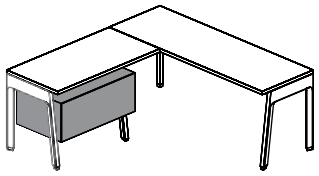

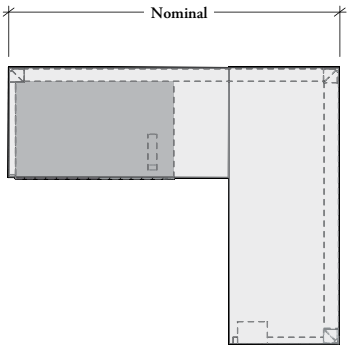

off-module on side application – one foot

- When a credenza is positioned between a Structural Leg and a perpendicular structural beam, the credenza must be specified at least 12" narrower than the parallel structural beam to which it is mounted
- As the credenza is mounted on a Structural Leg on one side, it must be specified in One Foot (O) option. The Foot can be installed on either side of the credenza

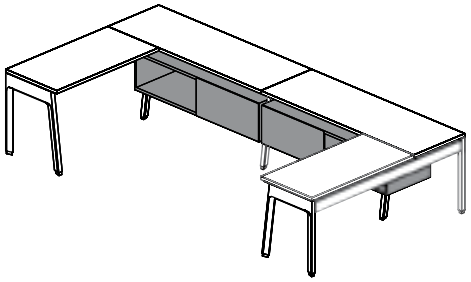

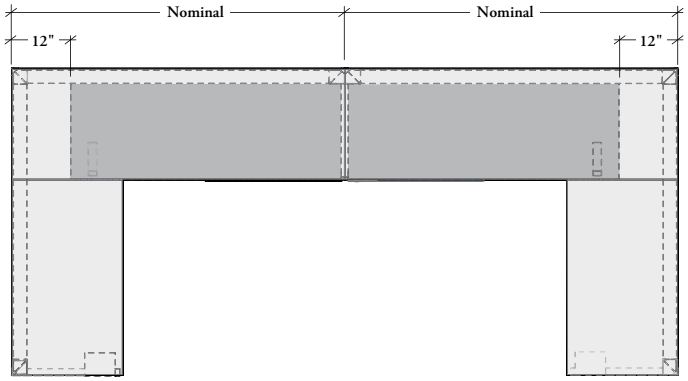

planning with suspended credenzas (continued)

semi-suspended credenza applications (continued)

off-module on both sides application – two feet

- When a credenza is positioned between two perpendicular structural beams, the credenza must be specified at least 12" narrower than the parallel structural beam to which it is mounted
- If the credenza is **not** mounted on any Structural Leg, it must be specified in Two Feet (T) option

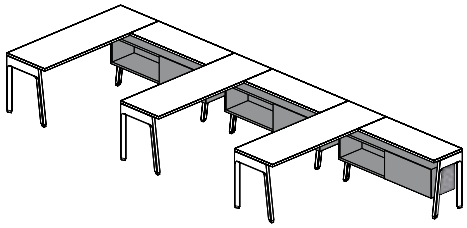

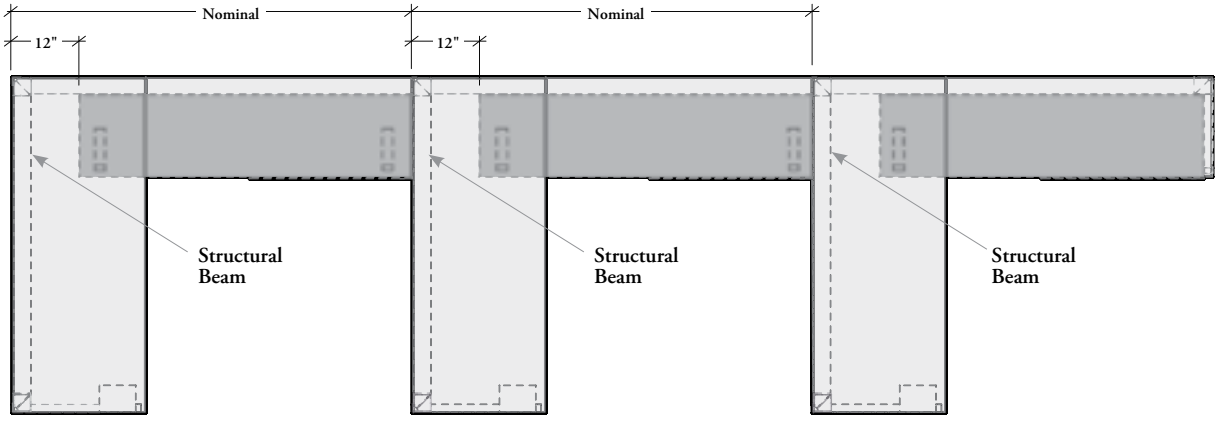

heigth-adjustability application

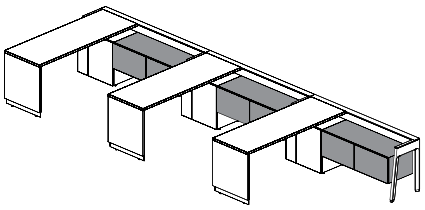

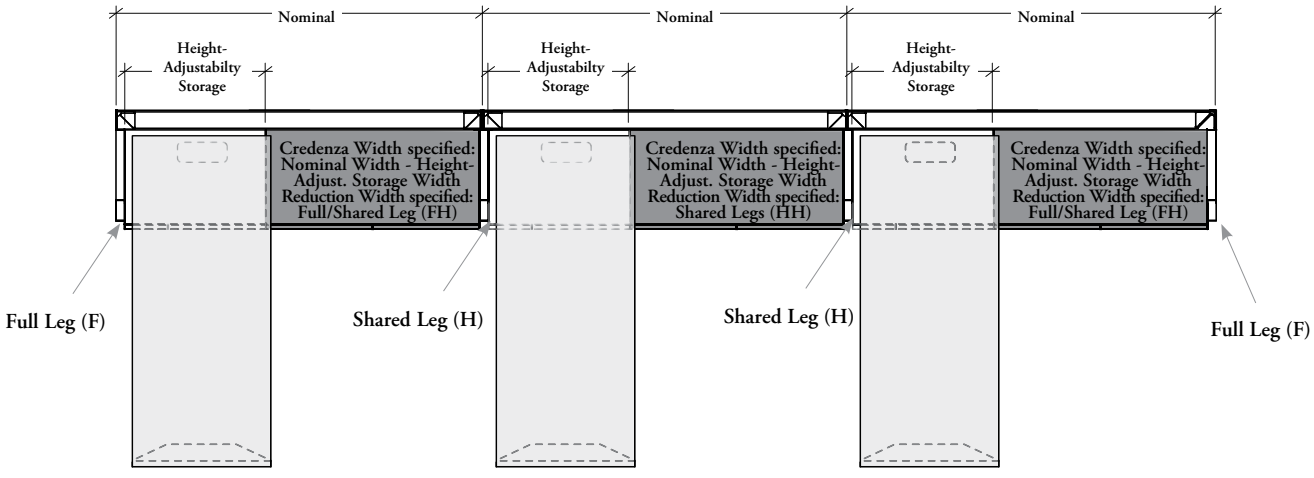

planning with suspended credenzas (continued)

semi-suspended credenza applications (continued)

off-module with recessed post with long span kit

parallel to long span

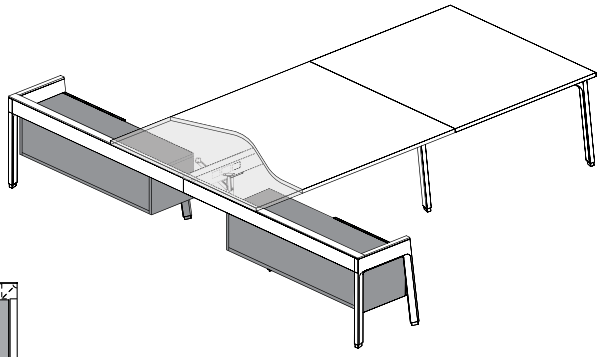

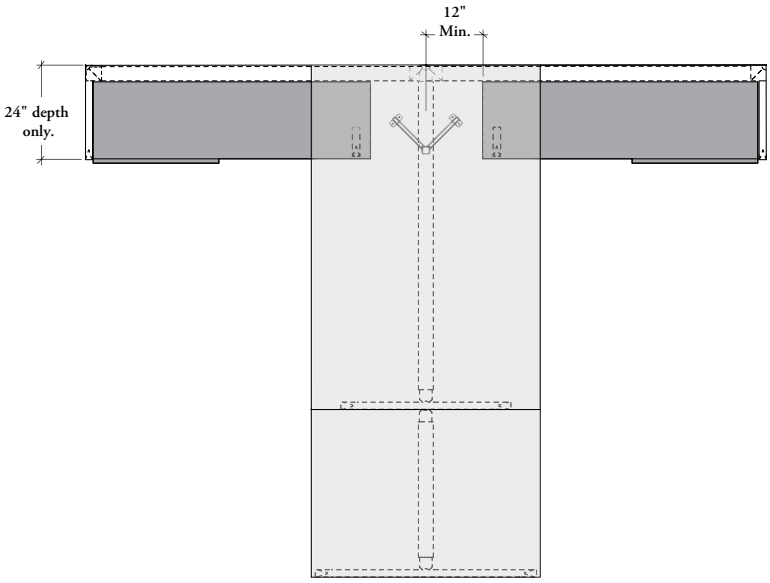

perpendicular to long span

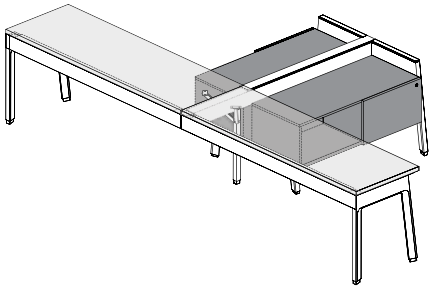

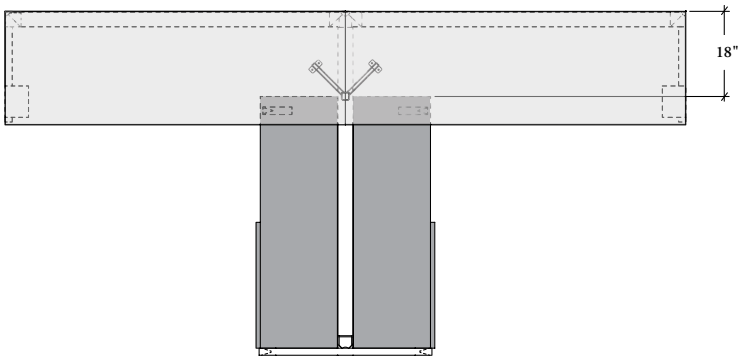

planning with suspended credenzas (continued)

- Suspended Credenzas (JNBSF, JNBDF, JNBSO, JNBSOO, JNBDO, JNBDOO, JNBSC, JNBDC) can be mounted on side of Structural Legs (JNDPF, JNDLS, JNDLD, JZSLS or JZSLD). **Cannot** be mounted on Freestanding Legs (JNALS, JNALD). The Structural Beam (JNDBB), Chicago Structural Beam (JNDCB) or EZ Fence Beam is mandatory
- Suspended Credenza **cannot** be mounted on 30" Single-Sided and 60" Double-Sided deep Structural Legs

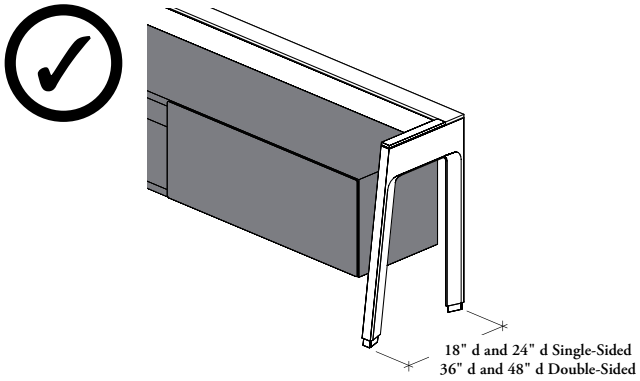

Suspended Credenza depth must fit with leg depth

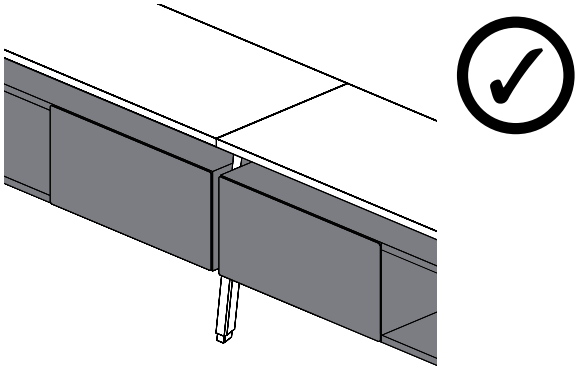

In-Line configurations can accept Suspended Credenzas on both sides

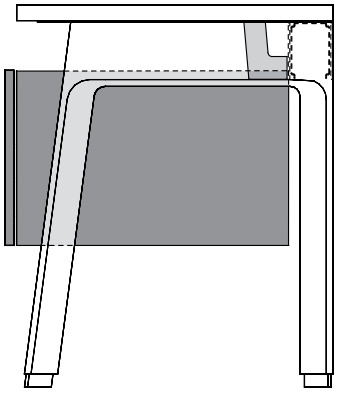

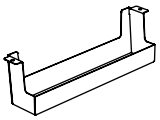

Cable Tray for Access Door (JNEWMT)

Suspended Credenza **cannot** be used in combination with Cable Tray for Access Door (JNEWMT). It will be interfere

planning with suspended credenzas (continued)

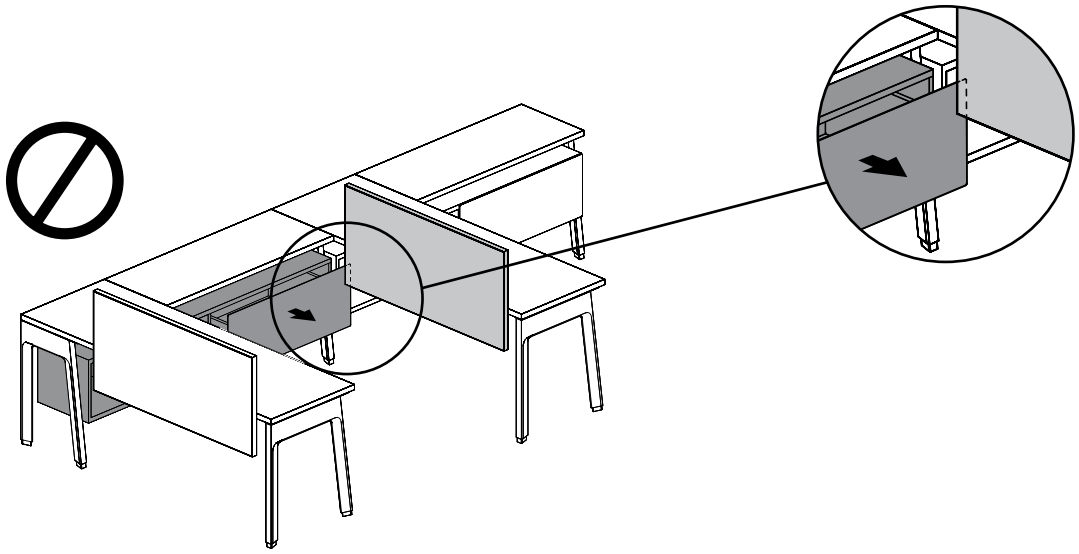

The opening of a Suspended Credenza drawer can interfere with a Glass Edge Screen – Worksurface-Mounted (JNSWGW), an Elevated Screen – Beam or Worksurface-Mounted (JNSE_) or a Floor Screen – Beam or Worksurface-Mounted (JNSF_) installed on a worksurface return

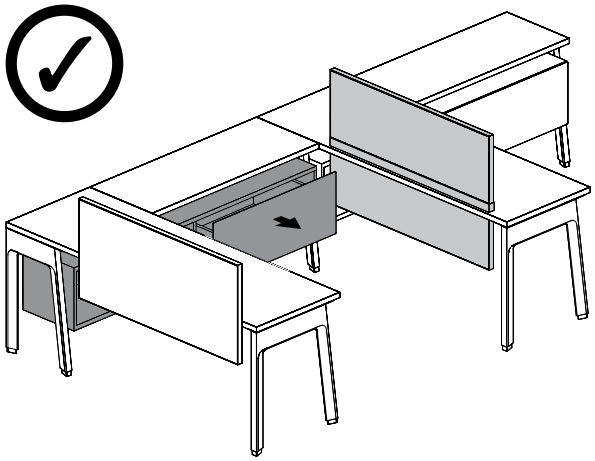

A combination of an Add-On Screen – Worksurface-Mounted (JNSASW, JNSAGW, JNSAFW, JNSAEW) with a Beam-Mounted Modesty Panel – Solid (JNABMS) would allow the opening of the drawer on a suspended credenza

OR

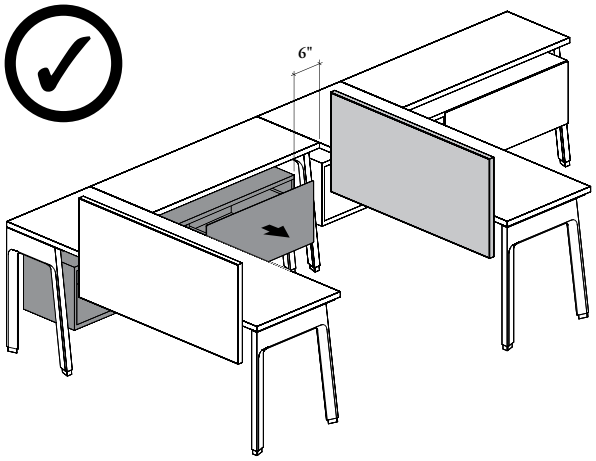

A 6" recessed Semi-Suspended Credenzas (JNBDF, JNBDO, JNBDC) could also be used to clear the drawer opening

planning with suspended credenzas (continued)

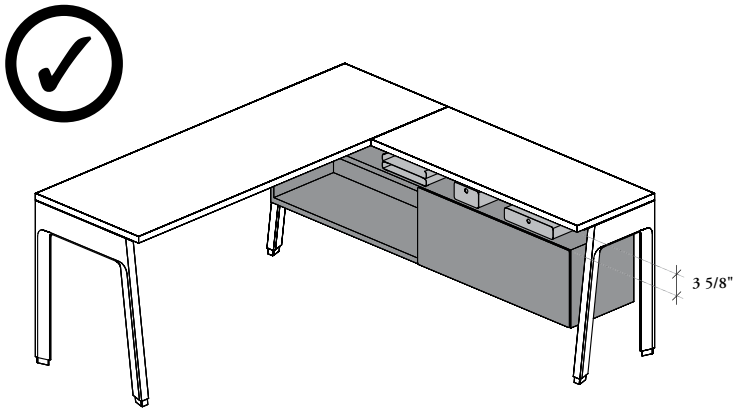

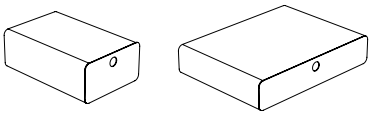

Drawer Module (JNAMD)

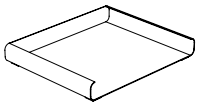

Tray Module (JNAMT)

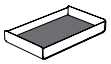

Utility Box (JNAUB)

Suspended Credenza used under a Worksurface creates a pigeonhole space that allows laying a Drawer Module (JNAMD) or up to two stacked Tray Modules (JNAMT) or Utility Box (JNAUB)

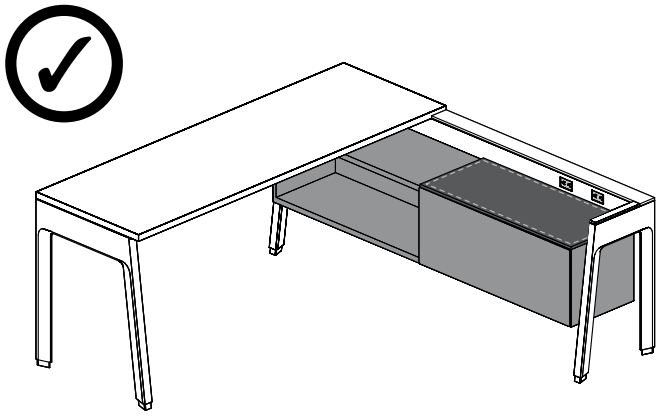

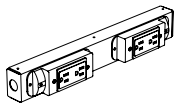

Receptacle Outlets included with Chicago Power Box (JNEPCB)

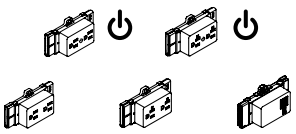

Receptacle Outlets (JNEPRO)

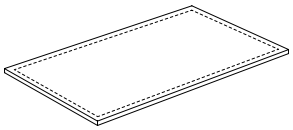

Seat Pad – Felt (JNACF)

Suspended Credenzas allow access to beam Receptacle Outlets (JNEPRO) and receptacle outlets included with Chicago Power Box (JNECPB) mounted in Facing Sides orientation. The Seat Pad (JNACF) can also be used in front of power access

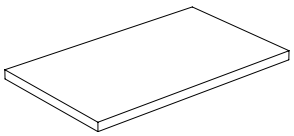

Seat Cushion – Fabric (JNACU)

The Seat Cushion – Fabric (JNACU) should be specified in a dimension that will prevent it from sitting in front of receptacle outlets as there will be an interference

planning with suspended credenzas (continued)

suspended credenza stability restrictions

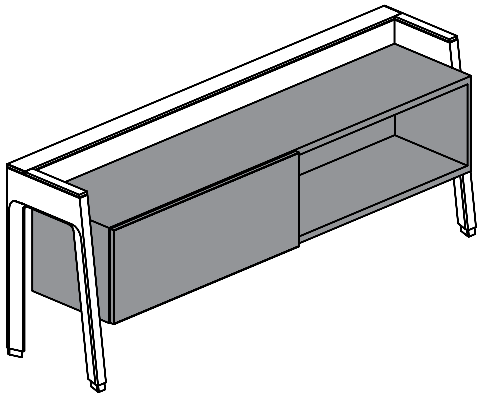

A Single-Sided Exposed Structure or a Single-Sided EZ Fence, of only one beam, with 18" deep Single-Sided Structural Legs **cannot** be stabilized with a Suspended Credenza only

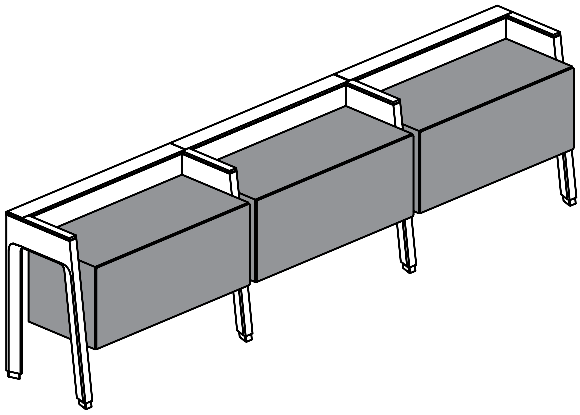

Cannot use single-drawer configurations (24"w, 30" w and 36" w) of Suspended Credenza – Lateral File in a continuous single-sided row. Rows of double-drawer configurations (42" w and 48" w) are allowed

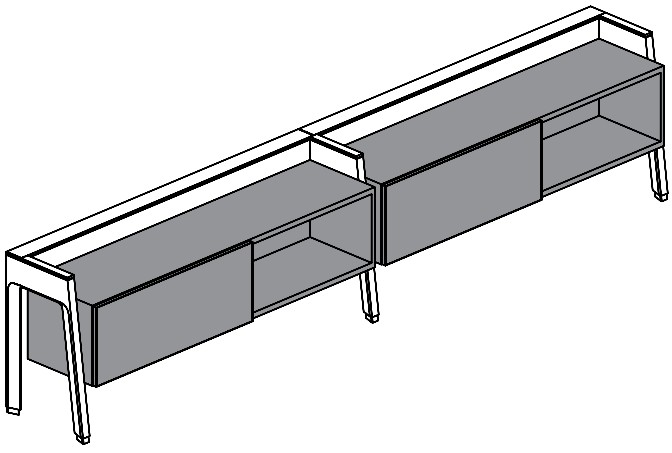

A single-sided storage spine made of 18" deep Suspended Credenzas – Open with Lateral File must be completed with a Beam-Mounted Screen, with a parallel worksurface, with a run-off or be wall anchored for stability

drawer & opening sizing chart – suspended storage

The following illustrates Expansion Cityline Beam-Mounted Storage drawers and open sections nominal widths.

suspended storage

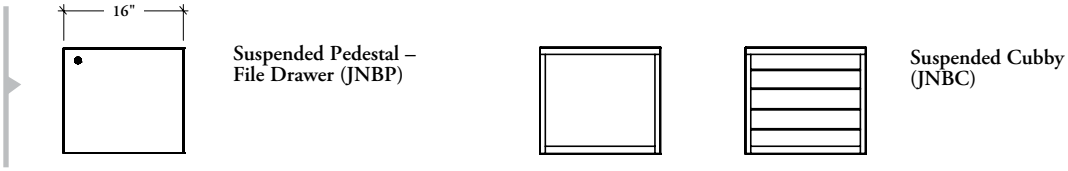

Suspended Pedestal – File Drawer (JNBP)

Suspended Cubby (JNBC)

suspended credenza

Drawer and opening sizing below are applicable to Suspended and Semi-Suspended Credenzas with one foot or two feet

Lateral File Credenza (JNBSF – JNBDF)

24" Width

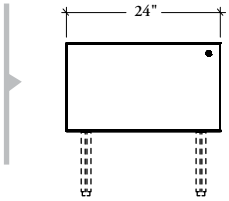

30" Width

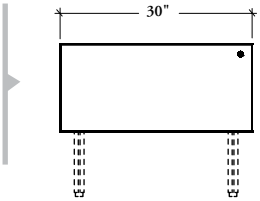

36" Width

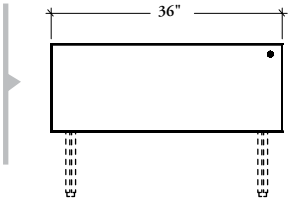

42" Width

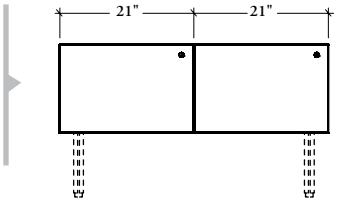

48" Width

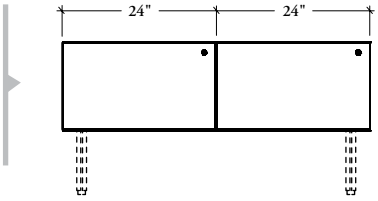

54" Width

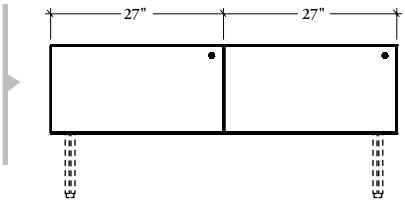

60" Width

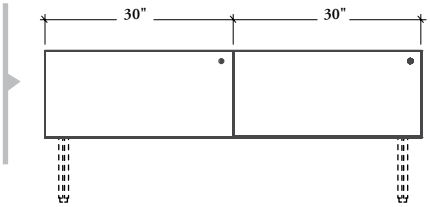

66" Width

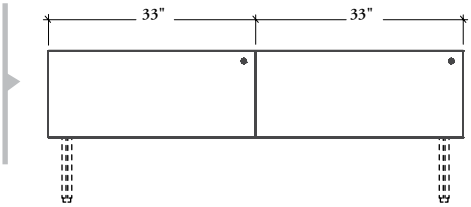

72" Width

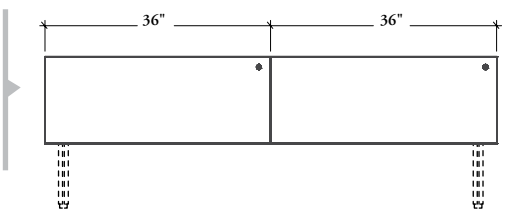

drawer & opening sizing chart – suspended storage (continued)

suspended credenza (continued)

Open with Lateral File Credenza (JNBSO – JNBDO)

42" Width

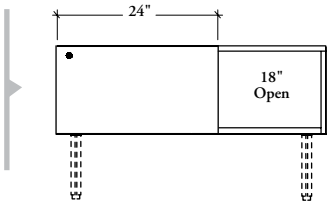

48" Width

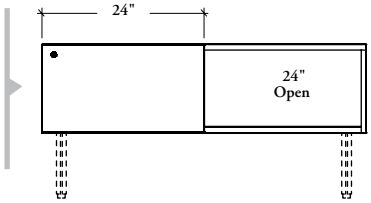

54" Width

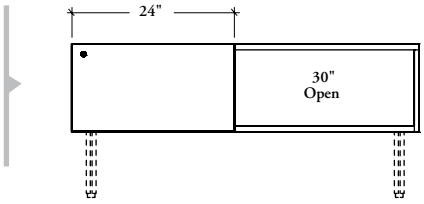

60" Width

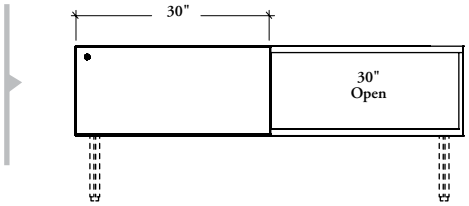

66" Width

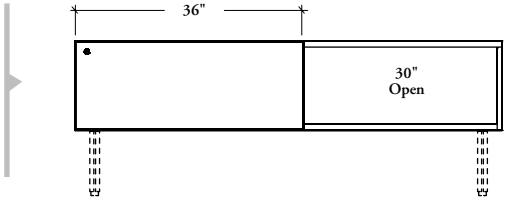

72" Width

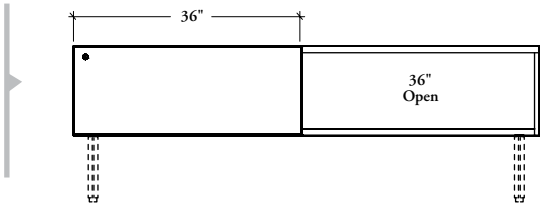

78" Width

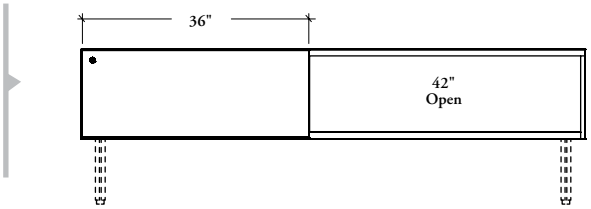

84" Width

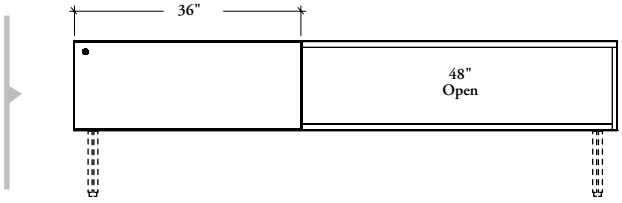

drawer & opening sizing chart – suspended storage (continued)

suspended credenza (continued)

Open with Combo File Credenza (JNBSC)

54" Width

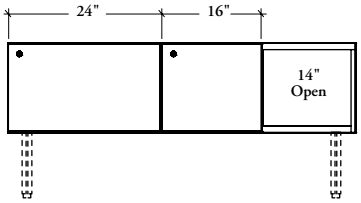

60" Width

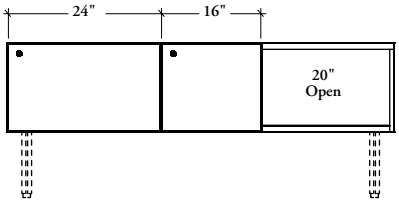

66" Width

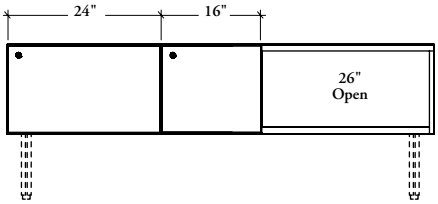

72" Width

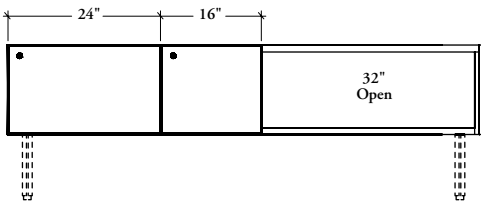

78" Width

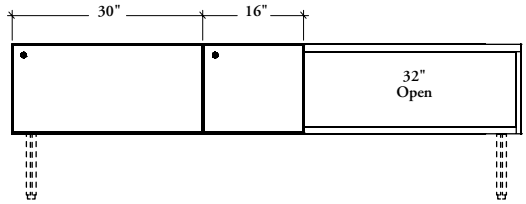

84" Width

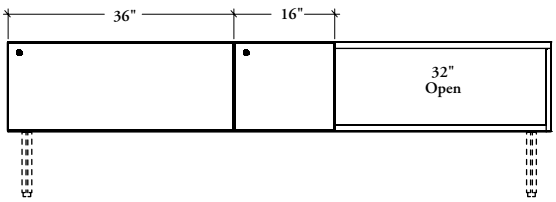

drawer & opening sizing chart – suspended storage (continued)

suspended credenza (continued)

Opening sizing below are applicable to Suspended and Semi-Suspended Credenzas with one foot or two feet

Open Credenza (JNBSOO – JNBDOO)

24" Width

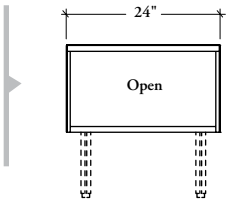

30" Width

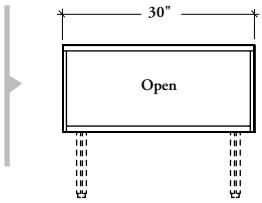

36" Width

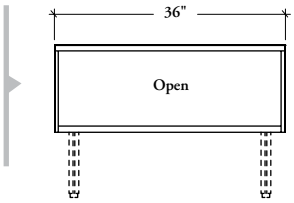

42" Width

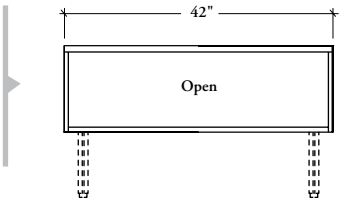

48" Width

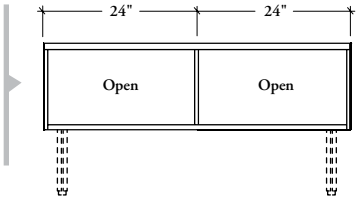

54" Width

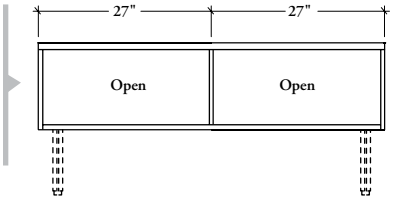

60" Width

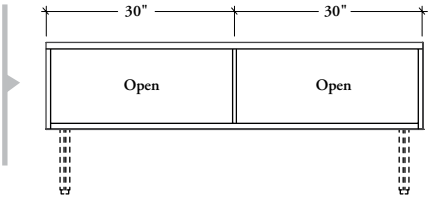

66" Width

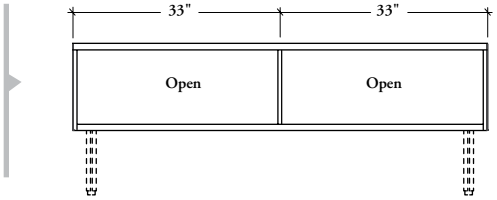

72" Width

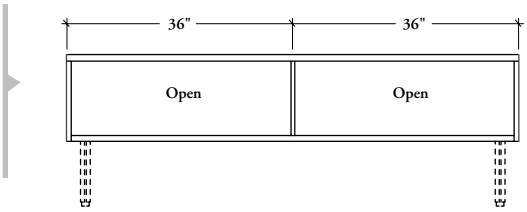

78" Width

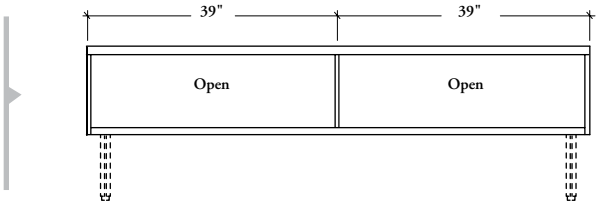

84" Width

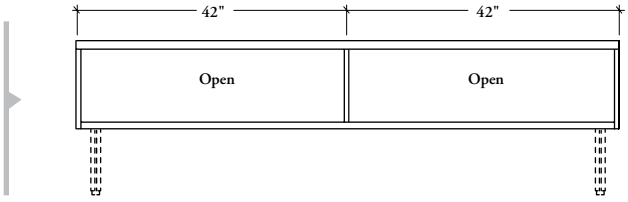

drawer & opening sizing chart – suspended storage (continued)

Lateral file drawer storage capacities are shown below.

- Drawers have full extension slides
- Filing can be front-to-back and/or side-to-side
- The drawer inner-dimensions are listed below
- Hanging File Bars are supplied in sufficient quantity to accomplish all that is shown below

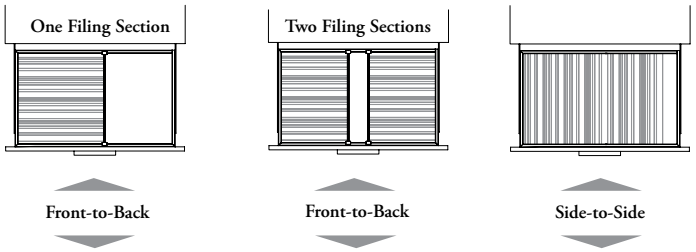

16" wide drawer

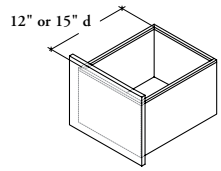

Front-to-Back	Front-to-Back	Side-to-Side
• Letter	n/a	• Letter (18" & 24" deep) • Legal (24" deep)

21" wide drawers

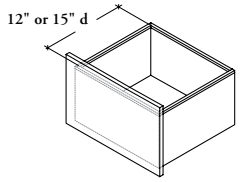

Front-to-Back	Front-to-Back	Side-to-Side
• Letter • Legal	n/a	• Letter (18" deep) • Legal (24" deep)

24" or 27" wide drawer

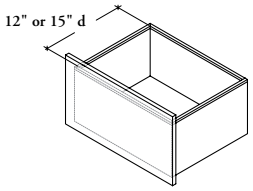

Front-to-Back	Front-to-Back	Side-to-Side
• Letter • Legal	n/a	• Letter (18" deep) • Legal (24" deep)

30" or 33" wide drawer

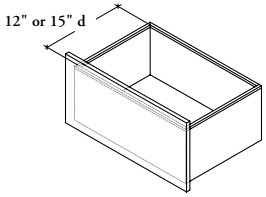

Front-to-Back	Front-to-Back	Side-to-Side
• Letter • Legal	• Letter* (30" wide) • Letter (33" wide)	• Letter (18" deep) • Legal (24" deep)

36" wide drawer

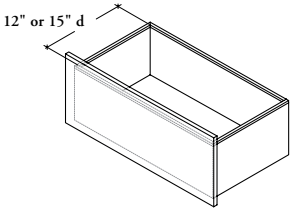

Front-to-Back	Front-to-Back	Side-to-Side
• Letter • Legal	• Letter • Legal**	• Letter (18" deep) • Legal (24" deep)

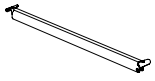

Hanging File Bar (JNFALB) can be ordered separately for replacement of original bars

* Only the Suspended Credenza – Lateral File (JNBSF) with width reduction None/ Shared Leg (NH) and None Leg (NN) can accommodate letter paper size

** Only the Suspended Credenza – Lateral File (JNBSF) with width reduction None/ Shared Leg (NH) and None Leg (NN) can accommodate legal paper size

integrating accessories (optional) – suspended credenza

Accessories can be integrated with Expansion Cityline Suspended Storage to increase functionality.

Can be specified separately, refer to the Accessories section for details

File Drawer Organizer (JNASO)

- The File Drawer Organizer (letter- or legal-size) can be used in file drawers for additional organization, they add the functionality of Box drawers to File drawers
- Can be used inside all Suspended or Semi-Suspended Credenza drawers
- Can be located anywhere inside a drawer and does not prevent from using the extra space for hanging files

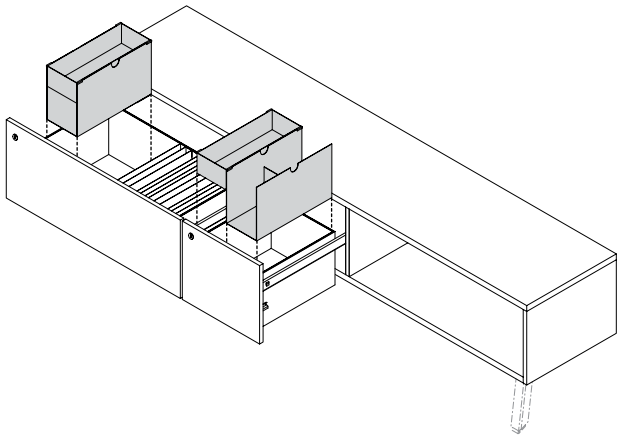

Seat-Pad – Felt (JNACF)

- Provide casual guest seating when applied on credenzas
- Can be used onto all Suspended or Semi-Suspended Credenzas top
- Can be positioned anywhere along the top

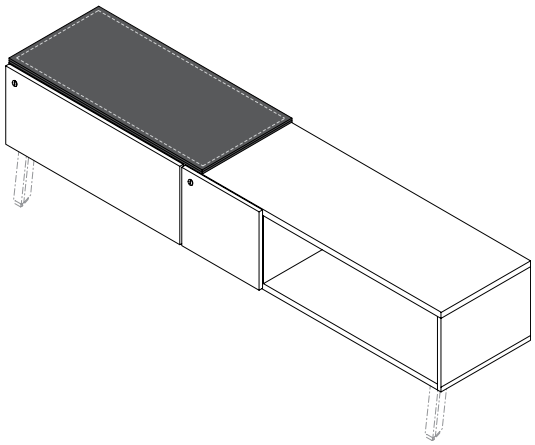

Seat-Cushion – Fabric (JNACU)

- Provide casual guest seating when applied on credenzas
- Can be used onto all Suspended or Semi-Suspended Credenzas top
- Can be positioned anywhere along the top as long as it does **not** sit in front of receptacle outlets

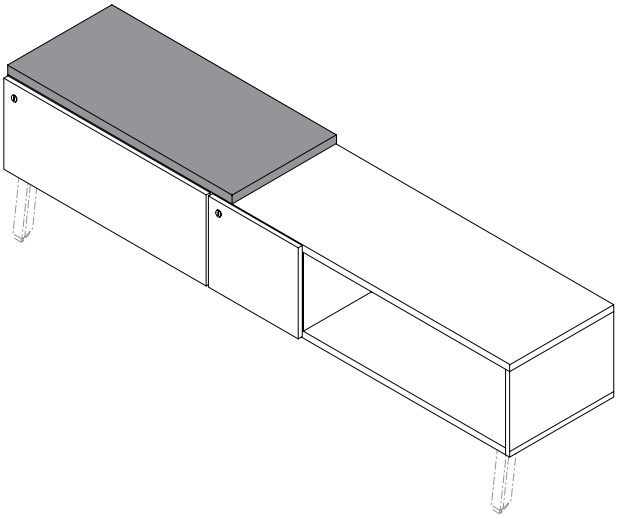

lock chart – suspended storage

If specified, all closed storage come with a lock and key set and can be keyed alike or randomly. A Key Chart must accompany every order, otherwise, orders will be shipped keyed randomly

	number of locks
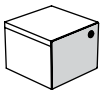 JNBP	1 x
24" to 36" w 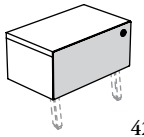 42" – 72" w 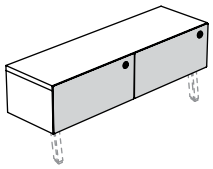 JNBSF, JNBDF	1 x 2 x
Drawer on Left Drawer on Right 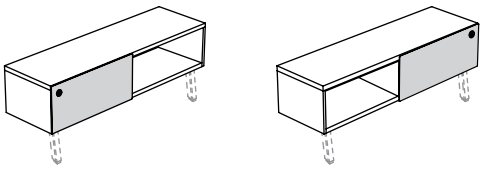 JNBSO, JNBDO	1 x
Drawers on Left Drawers on Right 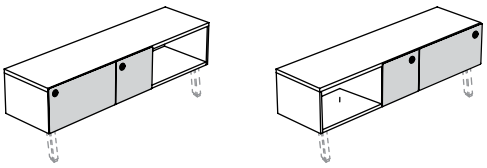 JNBSC, JNBDC	2 x

Lockable Single Drawer

beam-mounted cabinet basics

Beam-Mounted Cabinets are multi-functional units that provide storage, space division and stand-up meeting surface.

- Structural Beam (JNDBB) or Chicago Structural Beam (JNDCB) and Structural Legs – Beam-Mounted Cabinet (JNDLL) must be specified separately and are mandatory to support Beam-Mounted Cabinet
- Beam-Mounted Cabinets (JNBBLO) can support the front edge of perpendicular worksurfaces on both sides
- **Not** compatible with EZ Fence Structure

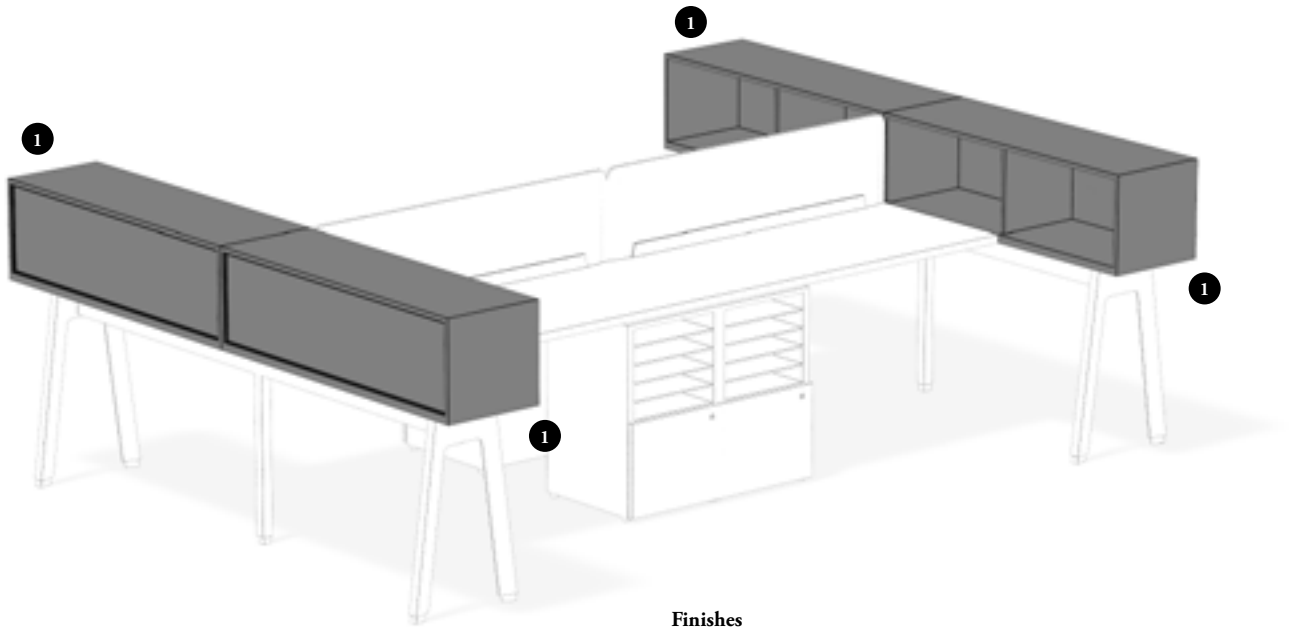

Finishes

Case Finishes: Source Laminate
Felt Fascia (Loft)
Stitches Finishes: Carbon Coordinate (C), Shale Coordinate (E), Carrara Coordinate (G) or Umber Coordinate (M)
- **Glass Fascia Finishes:** Back-Painted. Made of 1/4" (6 mm) tempered glass
- **Fabric Fascia Finishes:** Teknion Standard Panel Fabrics

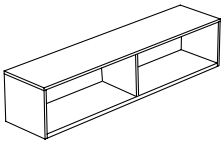

Single-Side (S)

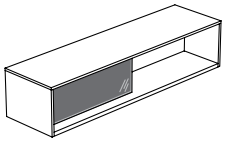

Double-Side (D)

Beam-Mounted Cabinet – Open (JNBBLO)

- This Beam-Mounted Cabinet provides open lateral storage at worksurface level, space division between or at the end of worksations and provides surface for casual stand-up meetings
- Beam-Mounted Cabinet is available with optional fascia option:
  - No Fascia (N)
  - Felt Tackable (E)
  - Fabric Tackable (F)
  - Magnetic Glass (M)
- Widths include 48" – 84" (6" increments)
- Height is only available in 13" to reach 42" datum height
- Available 15" deep for Single-Sided (S) 1 and 18" deep for Double-Sided orientations. Double-Sided is offered Open on Left (L) or Open on Right (R)

planning with beam-mounted cabinets

The following must be considered when planning Beam-Mounted Cabinets in Expansion Cityline.

Beam-Mounted Cabinets are built with 1 3/16" bottom to fit the worksurface thickness and create a surface continuity

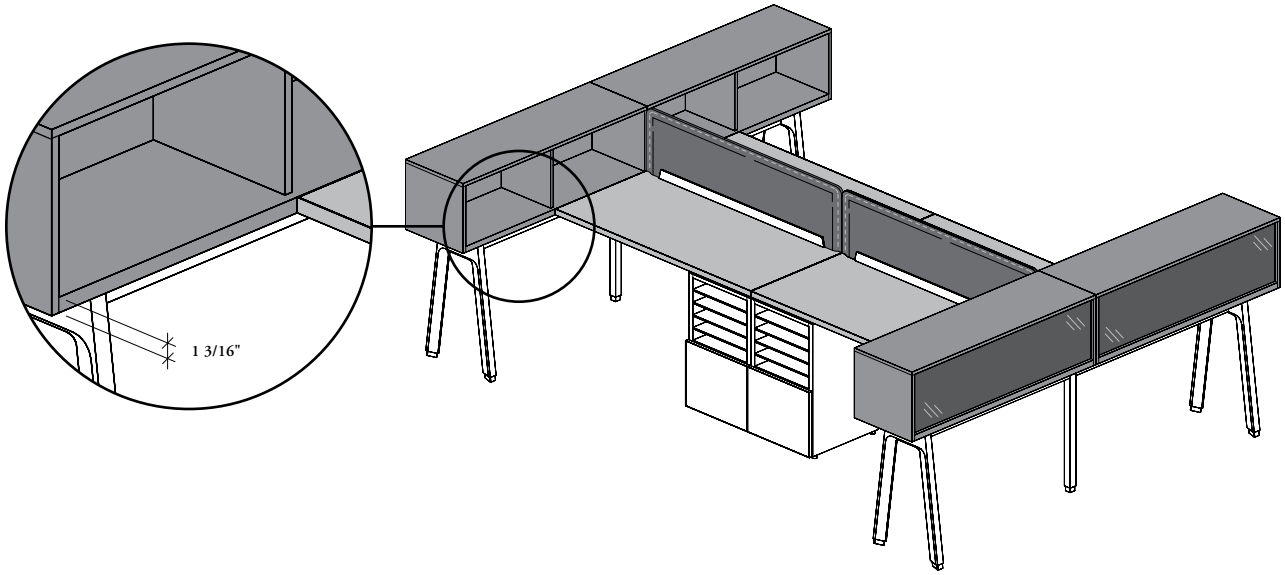

beam-mounted cabinet width dimensions

single-sided application

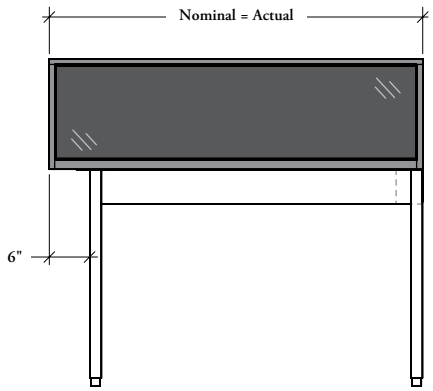

double-sided application

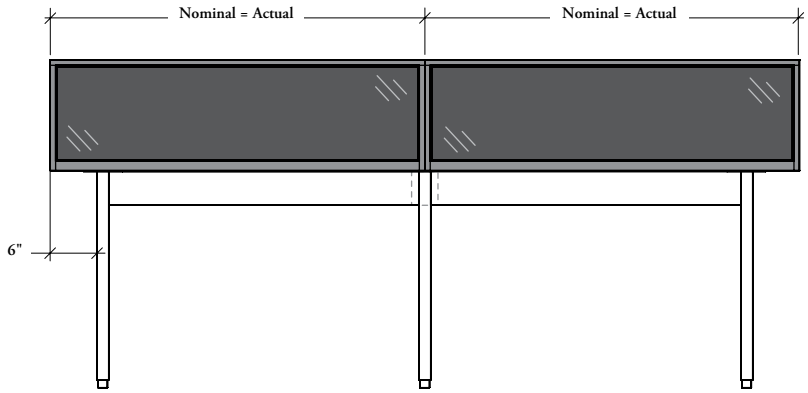

planning with beam-mounted cabinets (continued)

beam-mounted cabinet depth dimensions

- Can be used in perpendicular applications only
- Add-On Screen – Beam-Mounted **cannot** run through Beam-Mounted Cabinet. Its width must be reduced of the cabinet encroachment value shown below. For details, refer to the Screens section
- Single-Sided and Shared Beam-Mounted Cabinets are both supported by Structural Legs – Beam-Mounted Cabinet; the single-sided cabinet positioning will have an impact on the workstation footprint

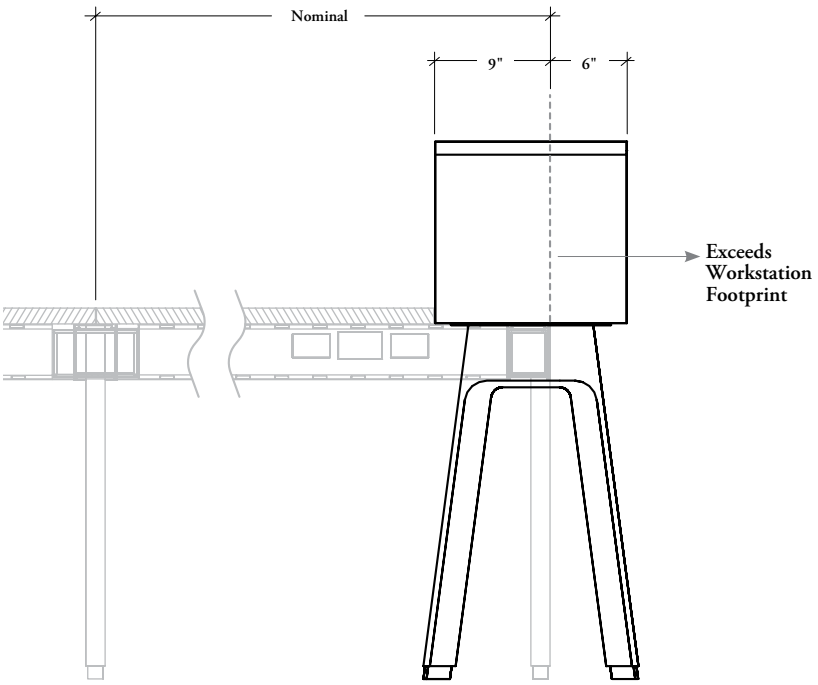

single-sided cabinet application

- Used with Single-Sided Beam under the cabinet
- Used in middle or end (Shown) of workstation
- Can support the front edge of a beam-mounted worksurface on either side
- Only the 15" deep single-sided Beam-Mounted Cabinet can be specified for end of run. A special attention should be paid when specifying the perpendicular beam width and the connecting worksurface. For details, refer to the Desk Structures & Worksurfaces section

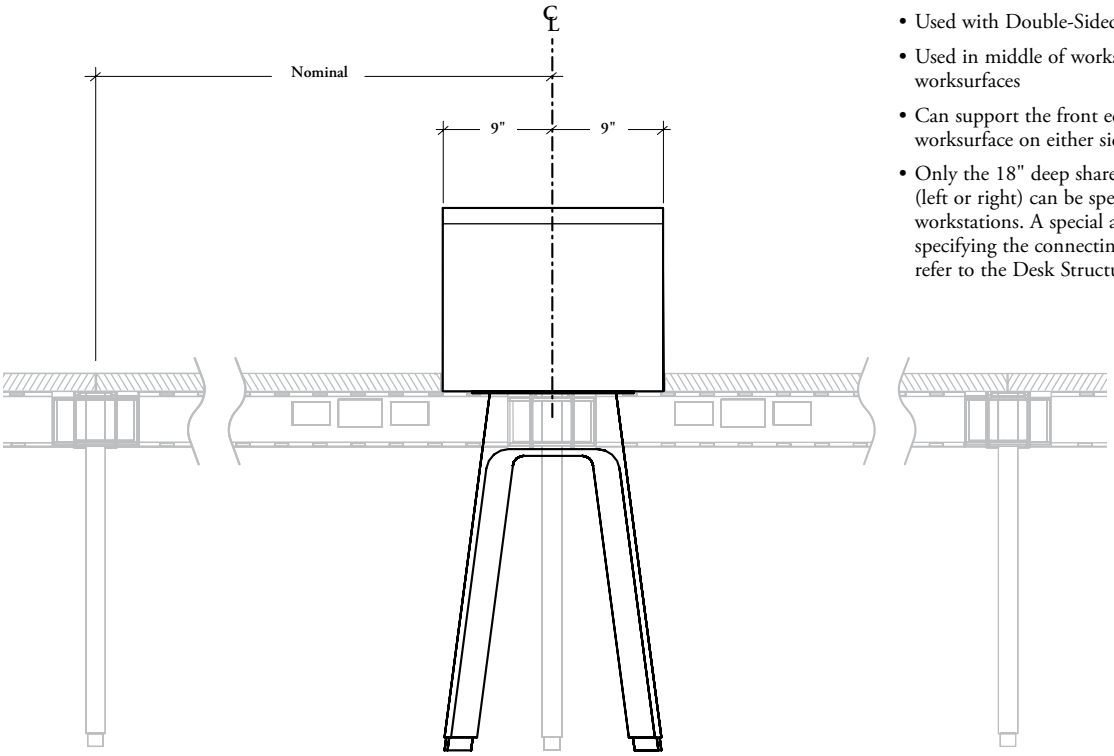

shared cabinet application

- Used with Double-Sided Beam under the cabinet
- Used in middle of workstation only, between two worksurfaces
- Can support the front edge of a beam-mounted worksurface on either side
- Only the 18" deep shared Beam-Mounted Cabinet (left or right) can be specified for the middle of workstations. A special attention should be paid when specifying the connecting worksurfaces. For details, refer to the Desk Structures & Worksurfaces section

planning with beam-mounted cabinets (continued)

beam-mounted cabinet orientations

single-sided cabinet application

Beam-Mounted Cabinets – Single-Sided are not oriented and can be installed facing inside or outside of workstation

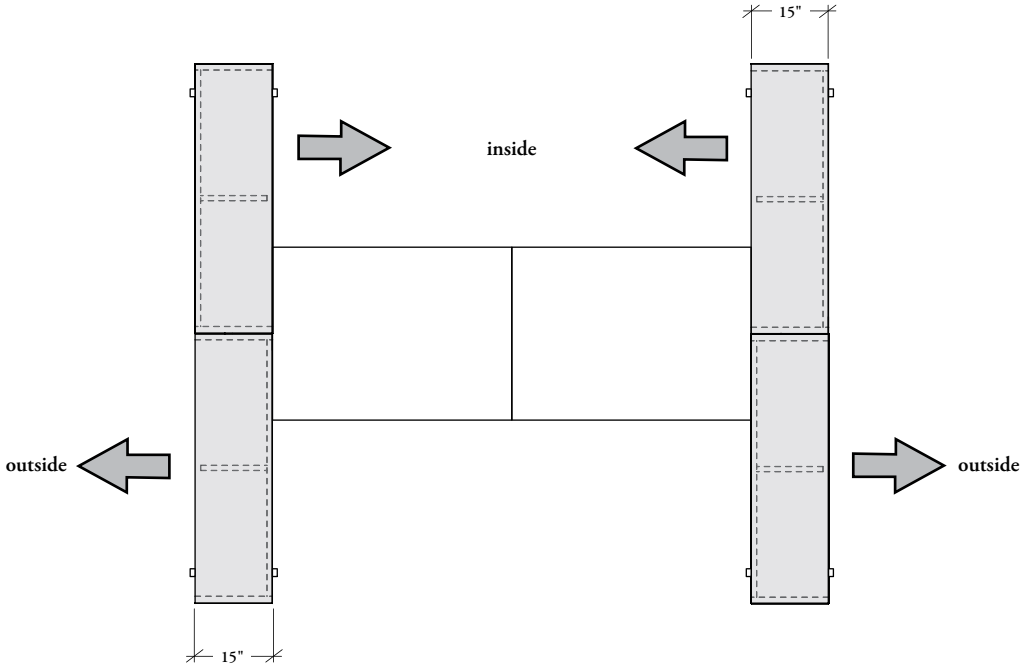

shared cabinet application

Beam-Mounted Cabinets – Shared are oriented and can be specified in desired orientation

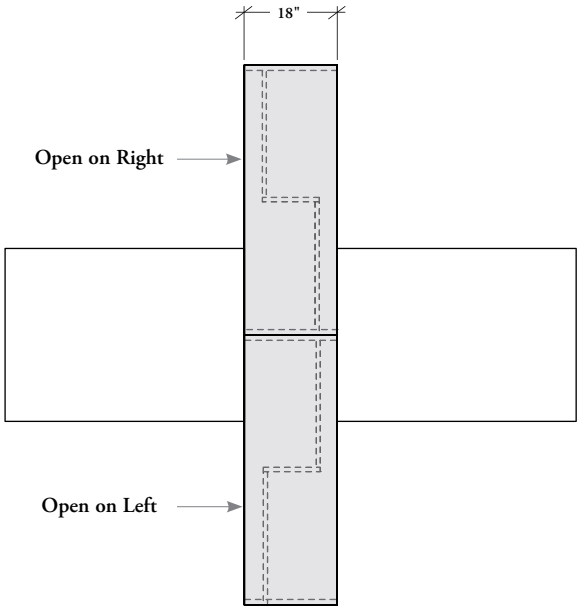

understanding beam-mounted storage – fence

The desk structure – fence components allow the mounting of a variety of Shelves and Lateral Hang-On Cabinets creating a functional environment with workspace and storage while keeping an impression of lightness.

- Products in this section need the combination of structural beams (JNDBB or JNDCB) and legs to be mounted
- **Not** compatible with EZ Fence Structure

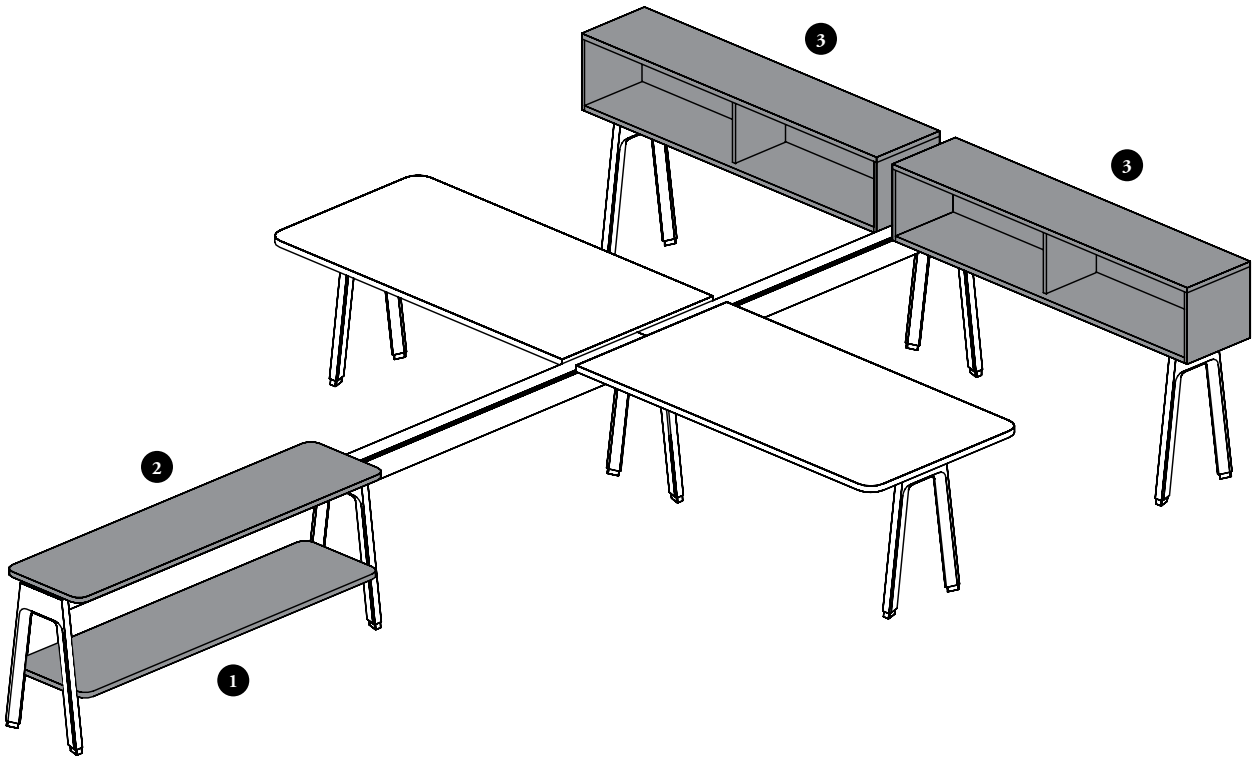

1. Suspended Shelf are fixed between two Structural Legs – Fence and provides open storage below structural beam
2. Beam-Mounted Shelf is mounted on top of structural beam and provides casual worksurface space at worksurface level
3. Beam-Mounted Cabinet acts as a worksurface level lateral open storage, space division between or at the end of station and provides space for casual stand-up meeting in casual applications

beam-mounted storage – fence basics

Beam-Mounted Storage – Fence are offered in many configurations and provide worksurface and storage capacity under or at worksurface level.

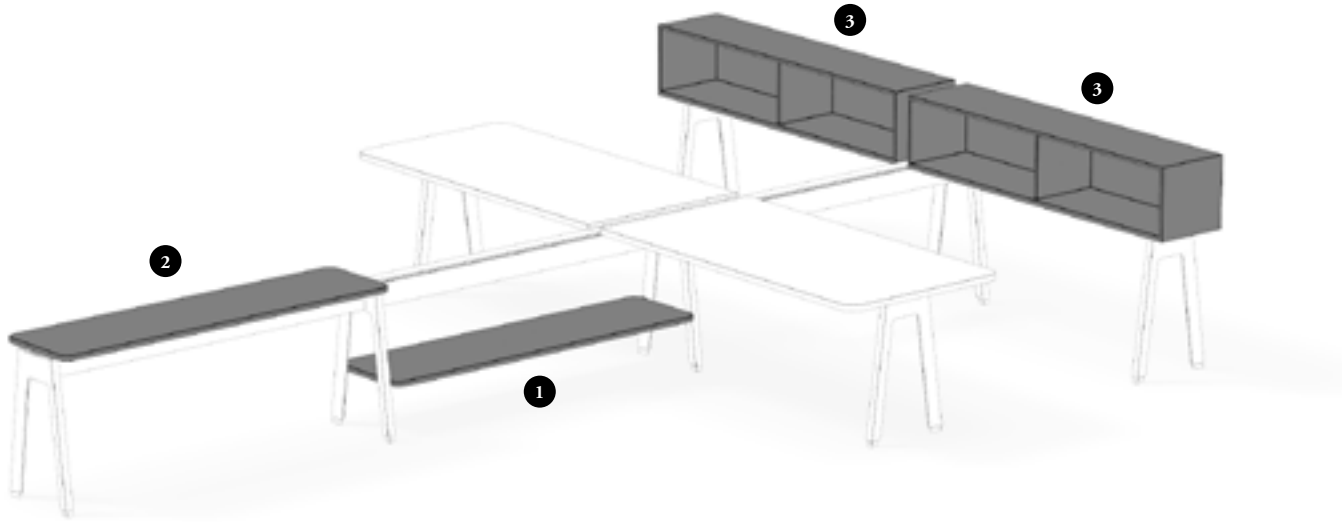

- Shelves are only available with 2" radius corners

Suspended Shelf – Solid (JNBSH)

- This shelf provides a convenient open storage space below the Structural Beam (JNDBB) or Chicago Structural Beam (JNDCB)
- Available 18" deep only
- Widths include 24" – 84" (6" increments)
- The Width Reduction option must be specified accordingly with the encroachment of legs on both sides. Refer to the following page for details

Shelf Finishes: Source Laminate
Mounting Hardware Finishes: Foundation, Mica and Accent

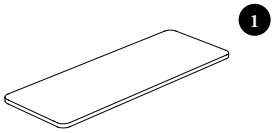

Beam-Mounted Shelf (JNBBW)

- This straight surface is used to provide casual worksurface space when mounted on Structural Beam (JNDBB) or Chicago Structural Beam (JNDCB) at worksurface level
- Available 18" deep only
- Widths include 24" – 84" (6" increments)

Shelf Finishes: Source Laminate

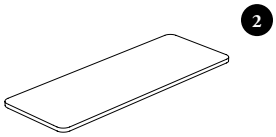

Lateral Hang-On Cabinet – Open (JNBDLO)

- This cabinet provides lateral open storage, space division and casual stand-up meeting space on a casual layout
- Beam-Mounted Cabinet is available with optional fascia option:
  - No Fascia (N)
  - Felt Tackable (E)
  - Fabric Tackable (F)
  - Magnetic Glass (M)
- Widths include 48" – 84" (6" increments)
- Height is only available in 13" to reach 42" datum height
- Available 15" deep for Single-Sided (S) and 18" deep for Double-Sided orientations. Double-Sided is offered Open on Left (L) or Open on Right (R)

Case Finishes: Source Laminate
Glass Fascia Finishes: Back-Painted. Made of 1/4" (6 mm) tempered glass
Fabric Fascia Finishes: Teknion Standard Panel Fabrics
Felt Fascia (Loft)
Stitches Finishes: Carbon Coordinate (C), Shale Coordinate (E), Carrara Coordinate (G) or Umber Coordinate (M)

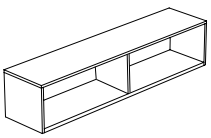

Single-Side (S)

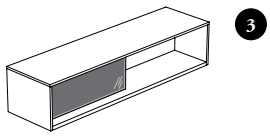

Double-Side (D)

planning with shelves

The following must be considered when planning Suspended Shelves in Expansion Cityline fence application.

Cannot be installed on Low Structural Leg – Fence (JNDLLF)

suspended shelf datum

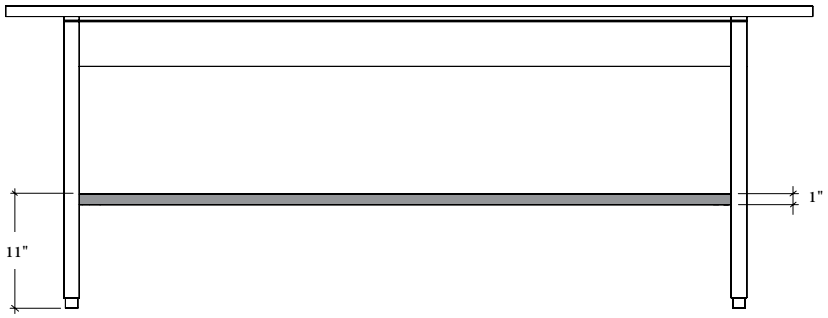

suspended shelves width reduction

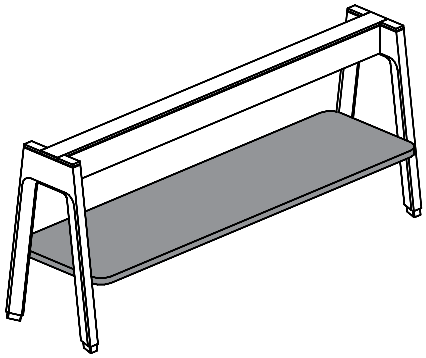

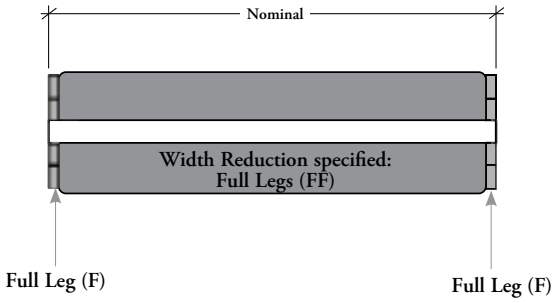

planning with shelves (continued)

suspended shelves width reduction (continued)

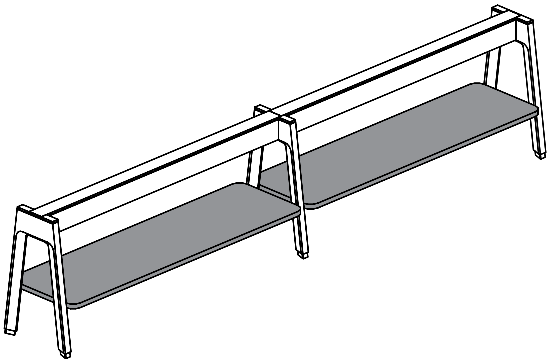

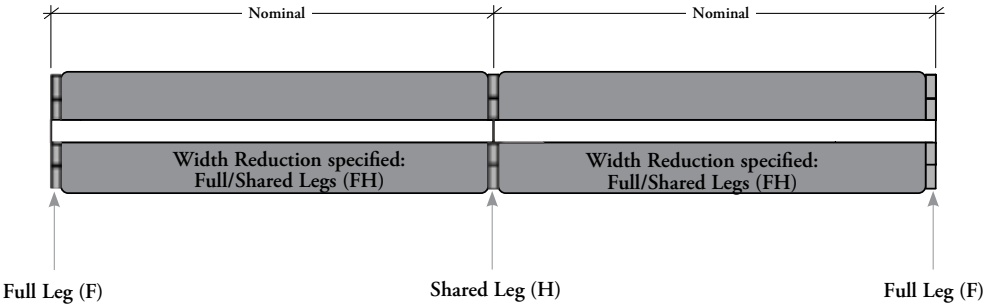

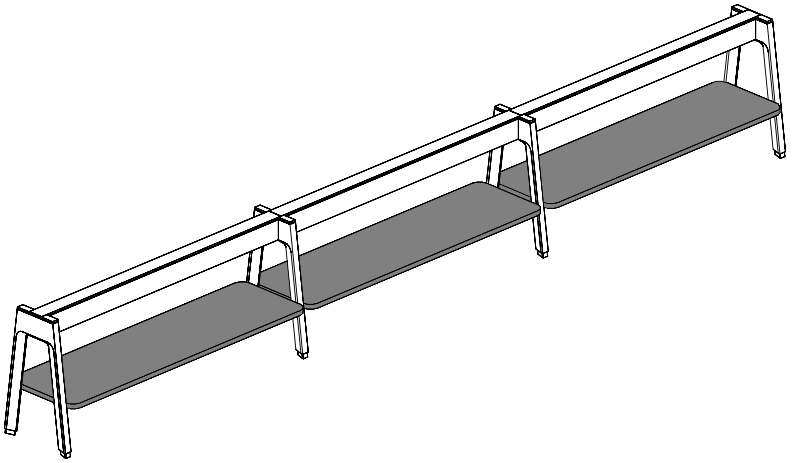

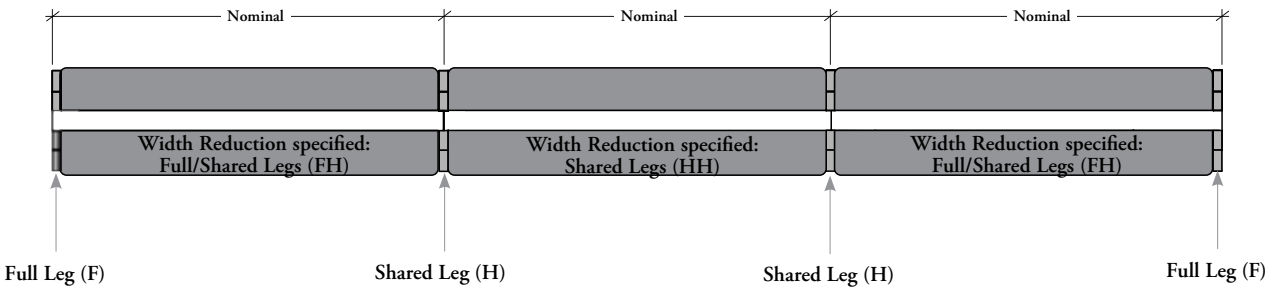

planning with shelves (continued)

The following must be considered when planning Beam-Mounted Shelves in Expansion Cityline fence application.

beam-mounted shelf datum

beam-mounted shelf applications

Beam-Mounted shelves can be attached together to create a shelf continuity. Linking Plates (JNWFP) must be specified separately to ensure shelves alignment

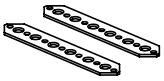

Linking Plate (JNWFP)

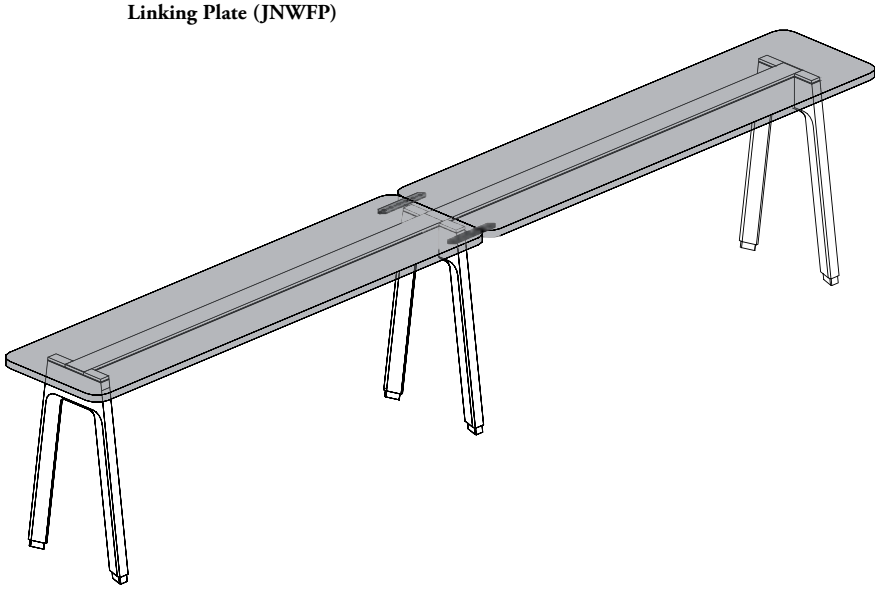

planning with shelves (continued)

beam-mounted shelf alignments

With Peninsula Worksurfaces (JNWPSN, JNWPSE, JNWPCN, JNWPCE, JNWPGN, JNWPGE)

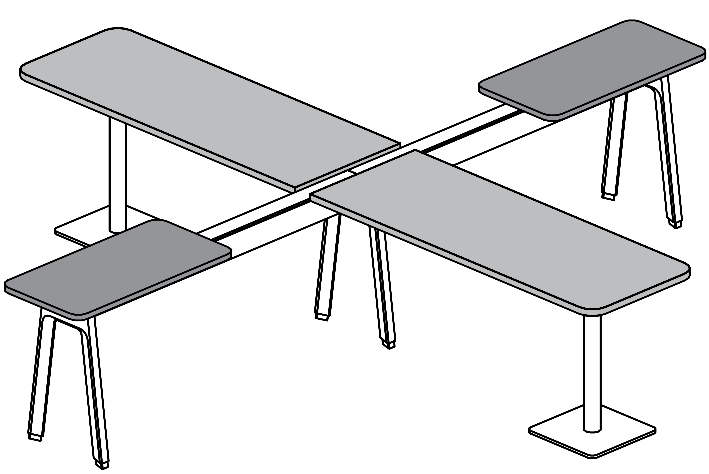

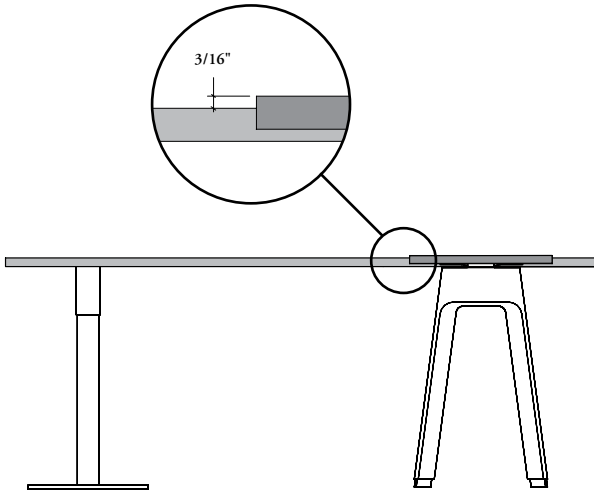

With Lateral Hang-On Cabinet (JNBDLO)

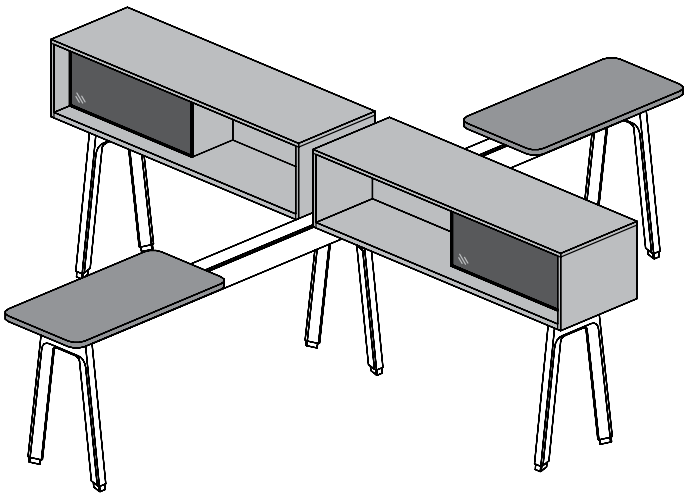

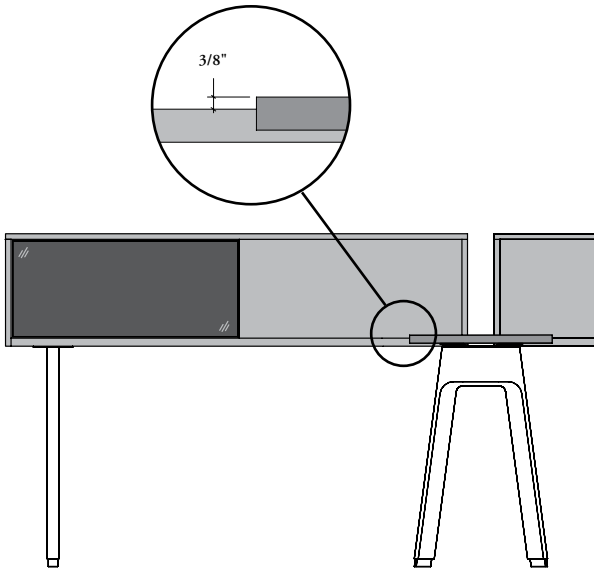

planning with shelves (continued)

The use of an on-module Structural Beam Cover – Top is mandatory with all Beam-Mounted Shelves

beam-mounted shelf applications

on-module

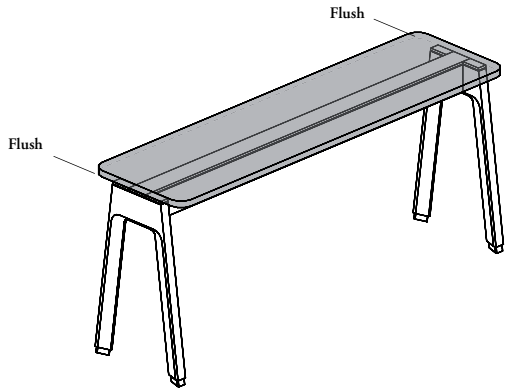

justified

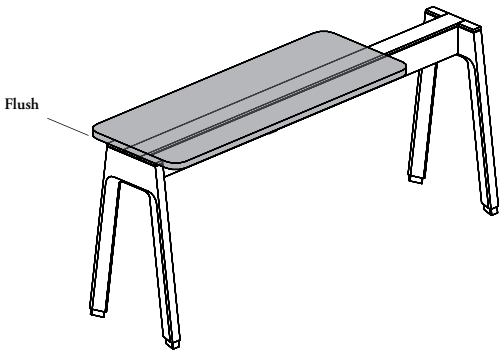

Beam-Mounted shelves can be positionned flush at the end of fence station, on-module or justified on one side

off-module

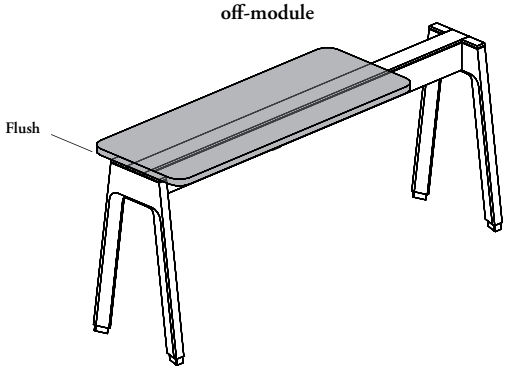

The side that is off-module can be positioned at each 3" increments

on-module

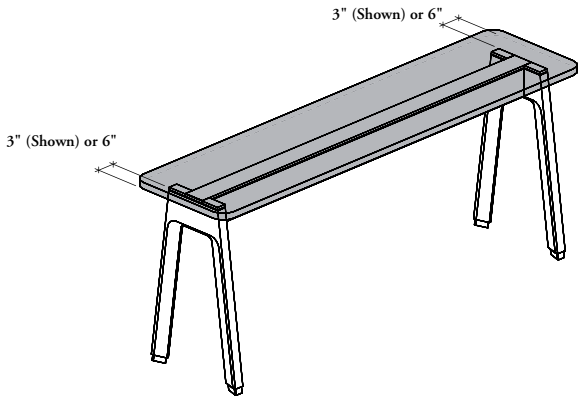

off-module

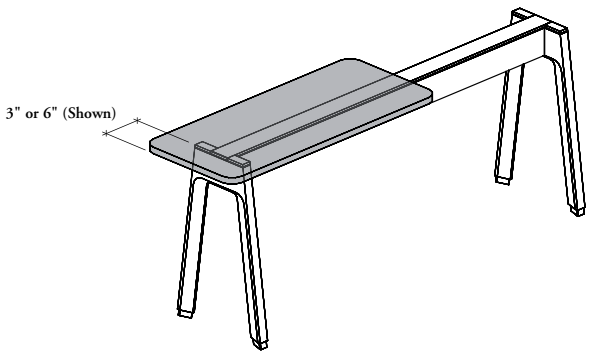

Beam-Mounted shelves can also exceed of 3" or 6" from the end of fence station

planning with lateral hang-on cabinets

The following must be considered when planning Lateral Hang-On Cabinets in Expansion Cityline fence application.

Only the Lateral Hang-On Cabinet (JNBDLO) can be mounted on fence applications

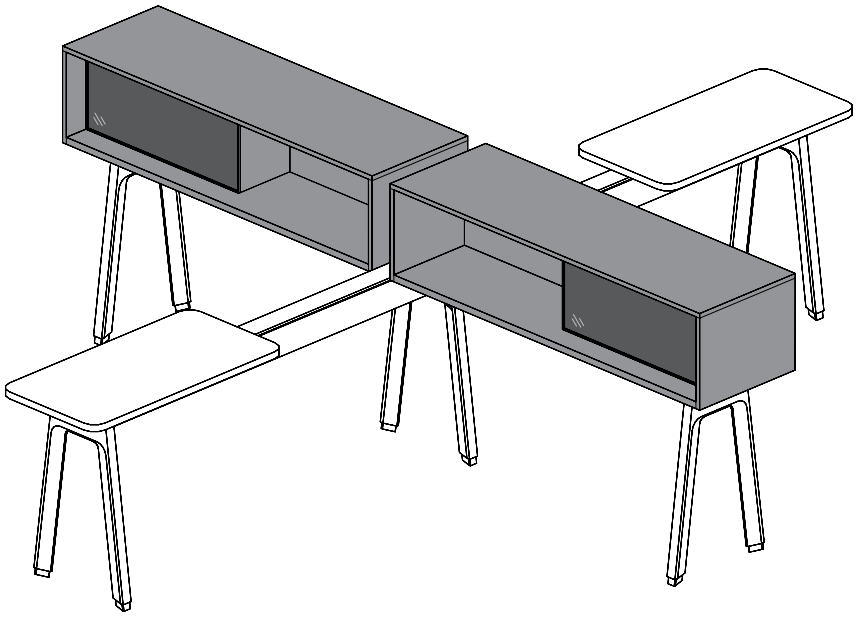

lateral hang-on cabinet width dimensions

single-side and dougle-sided application

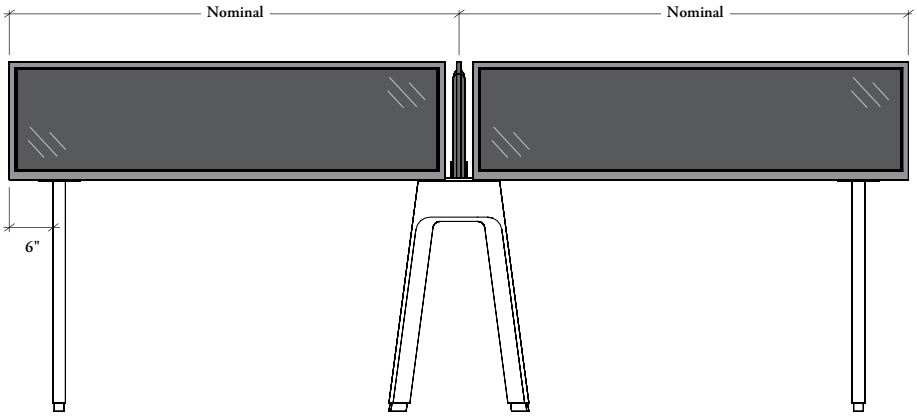

The Lateral Hang-On Cabinet (JNBDLO) clears the structural beam to let enough space to use Structural Beam Covers – Top (JNDBTC) or Add-On Screens – Beam-Mounted (JNSASB, JNSAGB, JNSAFB, JNSABE)

planning with lateral hang-on cabinets (continued)

lateral hang-on cabinet orientations

single-sided cabinet application

- Beam-Mounted Cabinets – Single-Sided are not oriented and can be installed facing inside or outside of workstation
- Cabinet Structural Leg – Fence can be justified on either sides of cabinet, or can be centered

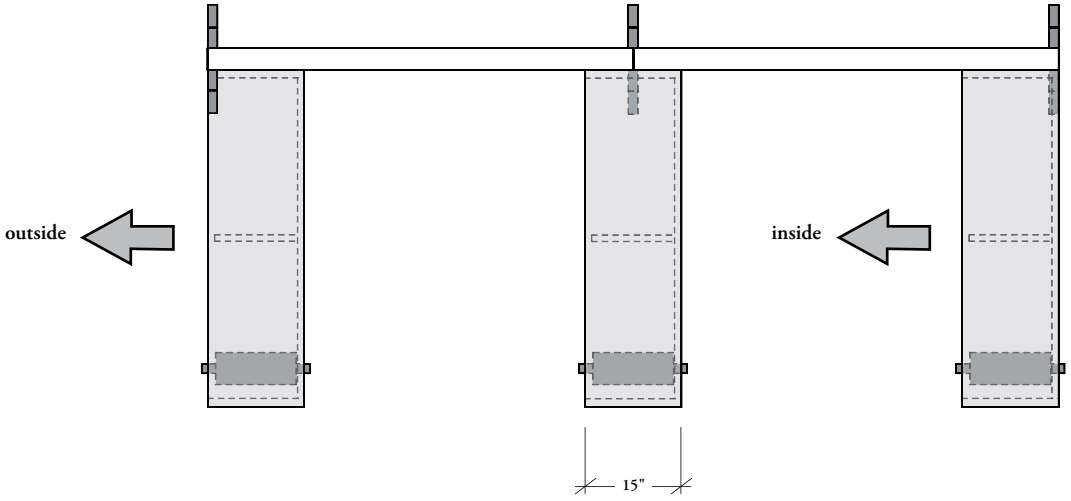

shared cabinet application

- Beam-Mounted Cabinets – Shared are oriented and can be specified in desired orientation
- Cabinet Structural Leg – Fence can be justified on either sides of cabinet, or can be centered

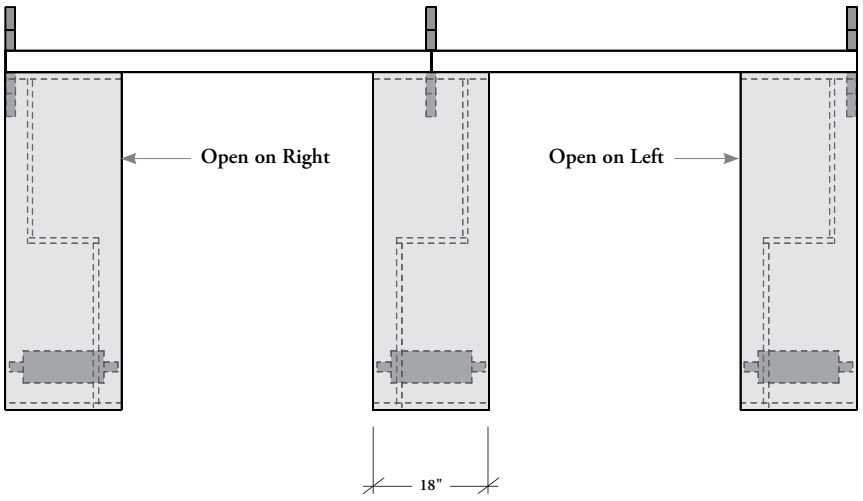

grain direction – beam-mounted storage

Attention the grain direction is important when planning with beam-mounted storage. The following examples demonstrate this. Laminates do not have one-way grain direction but rather a bi-directional grain pattern.

- Grain/patterns are **not** "centered" on storage unit and shelves
- Includes Source and Foundation Laminate (Standard, Finegrain and Straightgrain)

suspended storage

Front

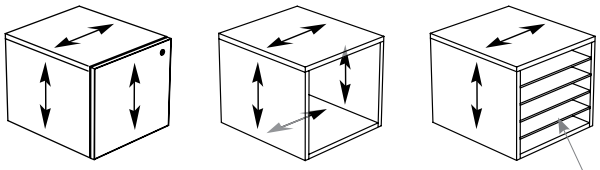

Back

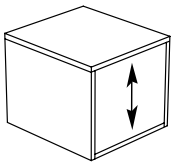

suspended credenza

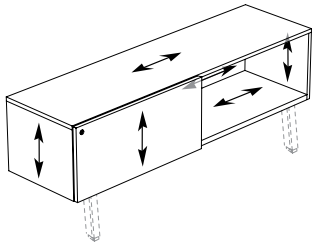

suspended shelf

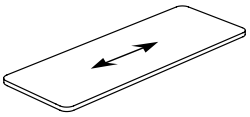

beam-mounted shelf

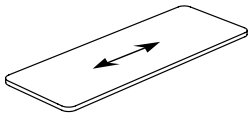

beam-mounted cabinet

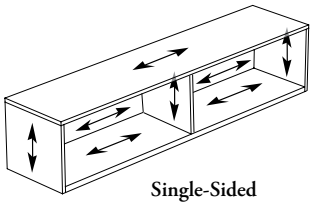
Single-Sided

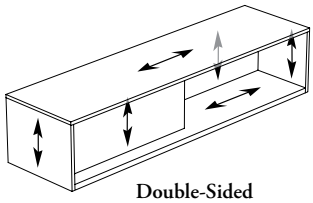
Double-Sided

lateral hang-on cabinet

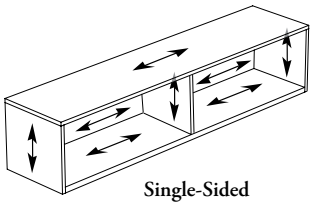
Single-Sided

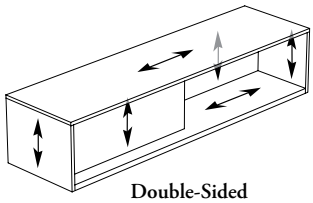
Double-Sided

Laminate Grains ⟷ = Grain Direction =

mounted storage

mounted storage

UNDERSTANDING MOUNTED STORAGE 612

ELEVATED DESK SHELF BASICS. 616

PLANNING WITH ELEVATED DESK SHELF 617

ELEVATED CABINET WITH SLIDING DOORS BASICS. 618

ELEVATED SLIM CABINET BASICS 619

DESKTOP CABINET BASICS. 620

PLANNING WITH ELEVATED DESK SHELF, ELEVATED CABINETS WITH SLIDING DOORS, ELEVATED SLIM & DESKTOP CABINETS 622

LATERAL DESKTOP CABINET BASICS. 624

PLANNING WITH LATERAL DESKTOP CABINET 625

LOCK CHART – MOUNTED STORAGE 626

GRAIN DIRECTION – MOUNTED STORAGE 627

understanding mounted storage

Expansion Cityline offers a variety of mounted storage available in different depths combining functionalities from full storage capacity to reduced worksurface footprint encroachment.

Mounted Storage are **NOT** compatible with EZ Fence Structure

Mounted Storage are available in a variety of heights and configurations. They can be open, semi-open or equipped with functional sliding doors. Can also be mounted on Single- or Double-sided Rectangular Worksurfaces

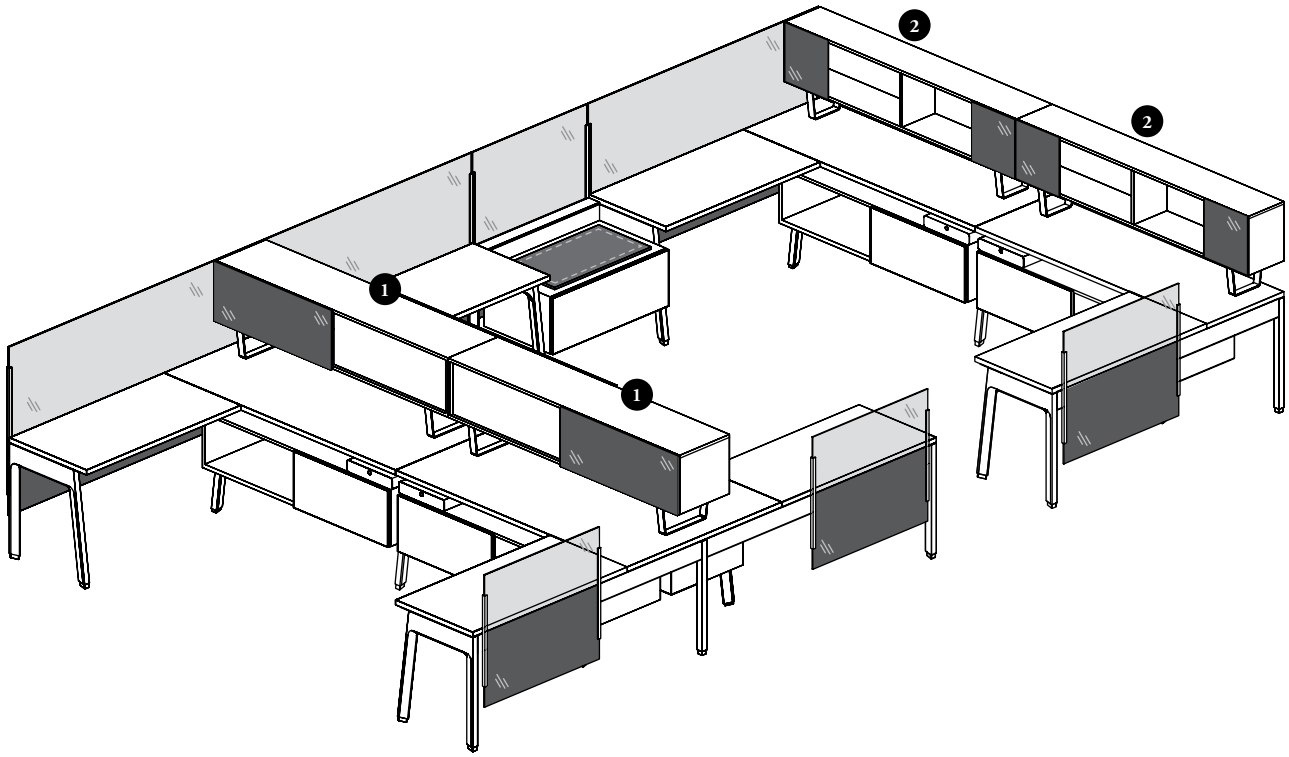

Elevated Desk Shelf – Provides transactional shelf space. A variety of accessories is also available to be mounted underneath the shelf

1 **Elevated Cabinets – Overlay Sliding Doors –** Single-sided configuration is available with one glass or solid overlay door, or with two doors (one glass or solid overlay door and one solid inset door)

Shared configuration is also available and comes with two doors (one glass or solid overlay door on both sides)

2 **Elevated Slim Cabinets –** This mounted cabinet reduces the encroachment on worksurface footprints

– **Open Style:**
Single-sided configuration comes with one or two open compartments with lateral access. A fascia can also be specified at both ends for additional functionality

Shared configuration comes with one open compartment with lateral access on each side. Fascias can also be specified at both ends of both sides for additional functionality

Lateral Desktop Cabinet – Mounts perpendicularly to single- or double-sided worksurfaces providing open unidirectional lateral storage and privacy

Desktop Cabinets – Single-sided configuration are offered either open, with two inset sliding doors in glass or solid materials

Shared configuration splits the cabinet to provide storage compartment on each side. Each compartment can either be open, with two inset sliding doors in glass or solid materials. Fascias can also be specified on back of each compartment for additional functionality

understanding mounted storage (continued)

elevated cabinets with sliding doors

- Single-Sided: Provides full cabinet width of storage for one user
- Shared: Provides half cabinet storage width for each user while providing privacy for heads-down works
- Three styles are available:

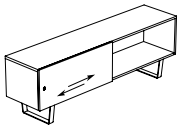

Single-Sided – One Door (O) is divided in two equal compartments for which one overlay door closes one of the compartments

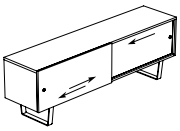

Single-Sided – Two Doors (T) is divided in two equal compartments for which one overlay door closes one of the compartments while a solid inset door closes the other

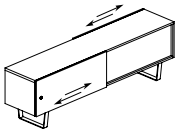

Shared (S) splits the cabinet to provide equal storage compartment on each side for which one overlay door is supplied

elevated slim cabinets

- Single-Sided: Provides two lateral access compartments and two accessory fascias (if specified) for one user
- Shared: Provides one lateral access compartment and two accessory fascias (if specified) for each user
- Two styles are available:

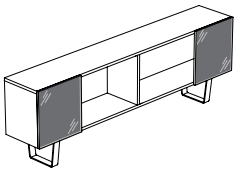

Single-Sided (S) is made of two open compartments partly covered with faked fronts. Accessory fascias can be specified on both faked fronts

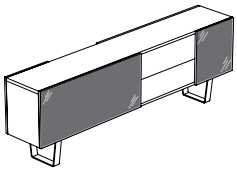

Shared – Open on Left or Right (L or R) is made of an open storage on specified side and another one facing opposite direction on the other side. Accessory fascias can be specified on both faked fronts and both backs

desktop cabinets

- Can come with open storage or with solid or glass sliding doors
- Single-Sided: Provides full width of storage for one user
- Shared: Provides half width of storage and half width of accessory fascia (if specified) for each user
- Two styles are available:

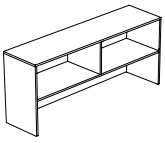

Single-Sided (S) is divided in two equal compartments facing the same direction

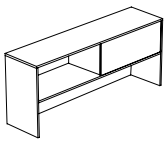

Shared – Open on Left or Right (L or R) is made of one compartment on specified side and another compartment facing opposite direction. Accessory fascias can be specified on back of both compartments

understanding mounted storage (continued)

- All dimensions on this page are actual
- The illustrations below show all Mounted Storage encroachment on worksurfaces

elevated desk shelf

Both shelf dimensions can be mounted on single- and double-sided worksurfaces

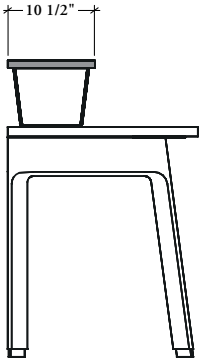

Elevated Desk Shelf mounted on a
Single-Sided Rectangular Worksurface

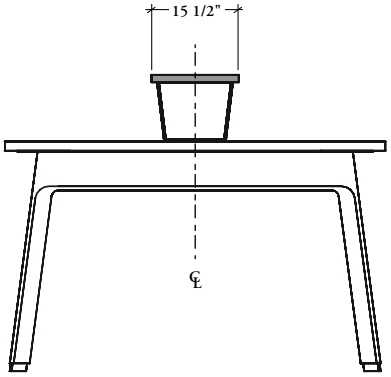

Elevated Desk Shelf mounted on a
Double-Sided Rectangular Worksurface

elevated cabinet with sliding doors

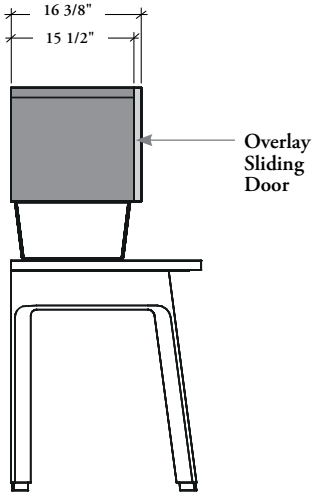

Single-Sided Elevated Cabinet mounted on a
Single-Sided Rectangular Worksurface

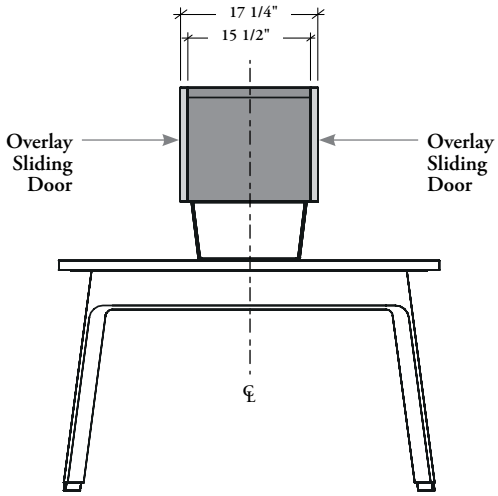

Shared Elevated Cabinet mounted on a
Double-Sided Rectangular Worksurface

understanding mounted storage (continued)

The illustrations below show all Mounted Storage encroachment on worksurfaces (continued)

elevated slim cabinets

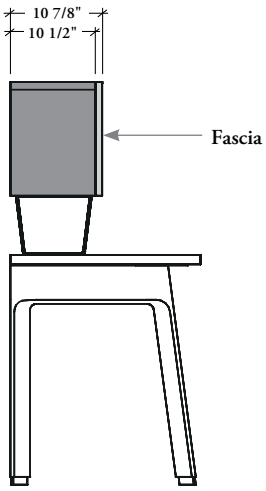

Single-Sided Elevated Slim Cabinets mounted on a Single-Sided Rectangular Worksurface

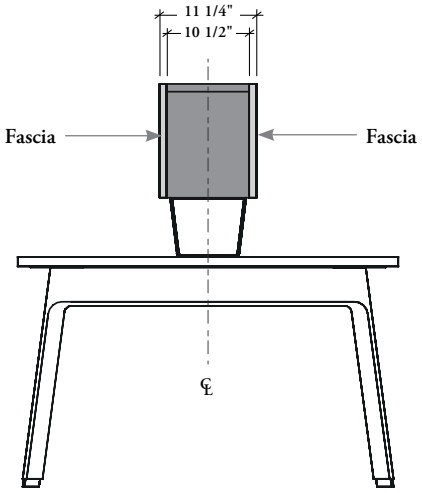

Shared Elevated Slim Cabinets mounted on a Double-Sided Rectangular Worksurface

desktop cabinets

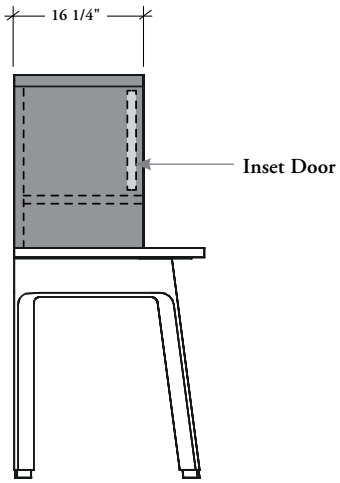

Single-Sided Desktop Cabinet mounted on a Single-Sided Rectangular Worksurface

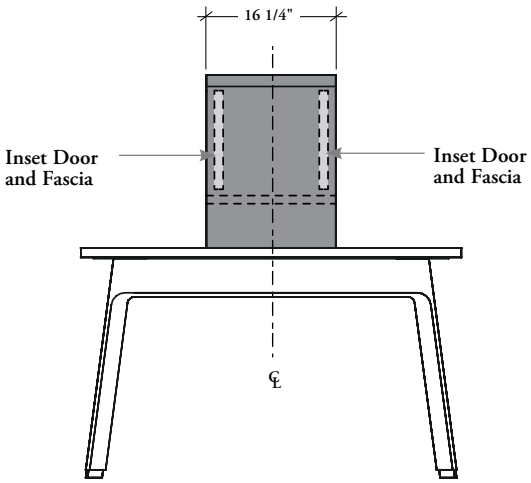

Double-Sided Desktop Cabinet mounted on a Double-Sided Rectangular Worksurface

elevated desk shelf basics

Provide transactional shelf space. Linear LED Light Support (JNASL) is also available to be mounted underneath the shelf. For details, refer on next page

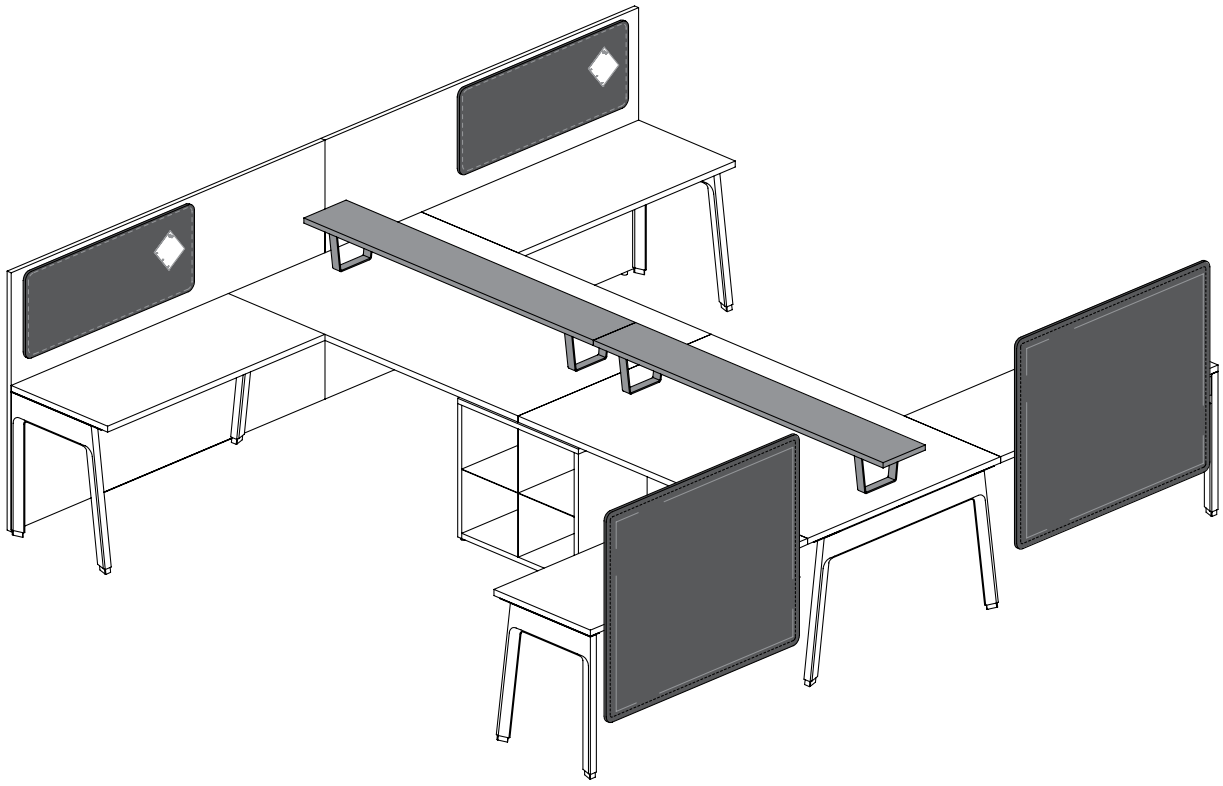

Finishes
Shelf Finish: Source Laminate
Support Finishes: Foundation, Mica and Accent

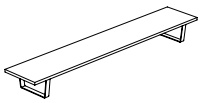

Elevated Desk Shelf (JNMES)

- Provides transactional shelf space
- Only available with Metal Angled (A) profile supports
- Height is 8 5/8" from worksurface top shelf top
- Depths include 11" or 16"
- Widths include 30" – 84" (6" increments)
- Available in Laminate finishes only
- Can be used on Single- or Double-Sided Rectangular Worksurfaces

planning with elevated desk shelf

The following should be considered when planning with Expansion Cityline Elevated Desk Shelf.

Warning, other specification restrictions apply. Refer on page 622 for details

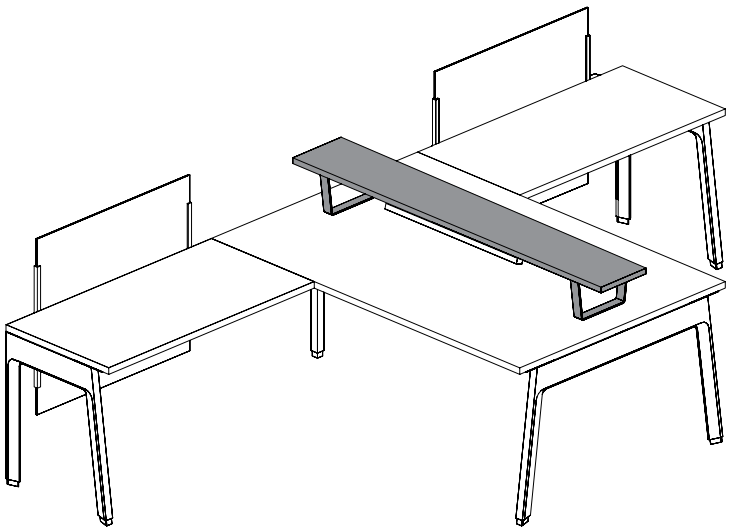

- Can be used in shared (between two users) or single-sided position (one user only)
- 11" or 16" deep shelf can be used on single- or double-sided Rectangular Worksurfaces
- Linear LED Light Support (JNASL) can be mounted underneath the shelf

accessory application

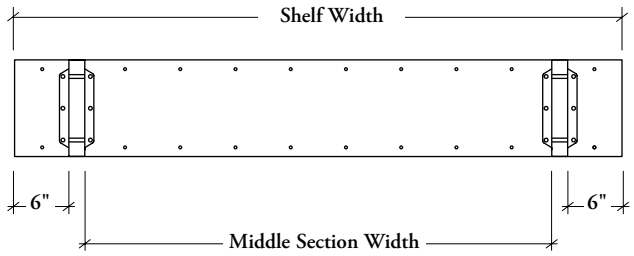

Linear LED Light Support
Can be mounted on any mounted cabinet using wood screews

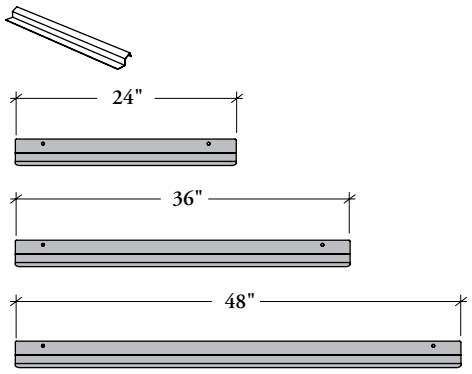

Linear LED Light Support
counts for shown dimension

Shelf Width	Middle Section Width
84"	66"
78"	60"
72"	54"
66"	48"
60"	42"
54"	36"
48"	30"
42"	24"
36"	18"
30"	12"

elevated cabinet with sliding doors basics

The following outlines the features of Expansion Cityline Elevated Cabinet with Sliding Doors.

- Sliding doors are **not** lockable
- Glass Sliding Doors provide writable functionality
- Cabinet dimensions allow one full row of letter-size binders

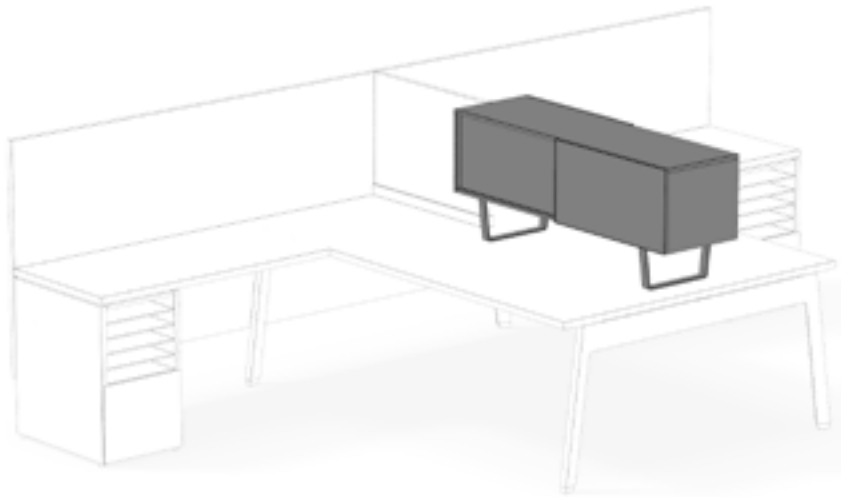

Finishes

Overlay Door Finishes: Back-Painted Glass* or Source Laminate**
* **Glass Overlay Doors** are 5/32" (4 mm) tempered glass
Inset Door Finish:** Source Laminate
** **Solid Overlay and Inset Doors** are 11/16" thick
Overlay Door Frame and if applicable, Pull Finishes: Foundation, Mica and Accent
Case Finish: Source Laminate
Support Finishes: Foundation, Mica and Accent

Elevated Cabinets with Sliding Doors (JNMEL_)

- Only available with Metal Angled (A) profile supports
- Available in height of 22" to match with 51" datum height
- Widths include 48" – 84" (6" increments)
- Single-Sided configuration can be specified one (one overlay door) or two doors (one overlay sliding door and one solid inset sliding door)
- Shared configuration splits cabinets to provide storage on both sides. Comes with one overlay sliding door on each side
- Only overlay door can be specified in glass or solid finish
- Can be specified left or right. Handedness is determined by location of the overlay door when facing unit

Single-Sided – One Door (O)
Overlay Door on Left (L) (Shown) or Right (R)

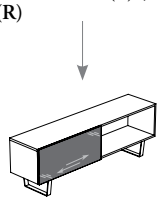

Single-Sided – Two Doors (T)
Overlay Door on Left (L) (Shown) or Right (R)

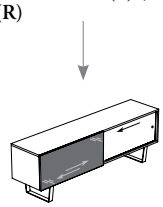

Shared (D)
Overlay Door on Left (L) (Shown) or Right (R)

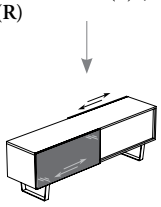

Elevated Cabinet – Overlay Sliding Door – Glass (JNMELG)

Glass Overlay Door comes with erasable message surface and only dry erase markers can be used

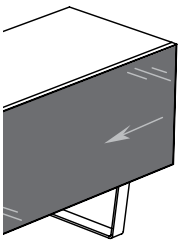

Glass and fabric doors are handled by the fingertips

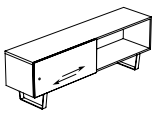

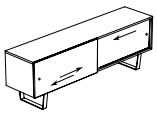

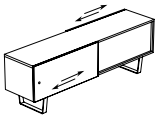

Elevated Cabinet – Overlay Sliding Door – Solid (JNMELS)

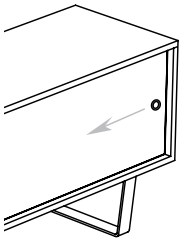

Solid doors come with a blind hole pull

elevated slim cabinet basics

The following outlines the features of Expansion Cityline Elevated Slim Cabinets.

- Accessory Fascias can also be specified on faked fronts of Single-Sided Elevated Cabinet – Open and on faked fronts and back panels of the Shared Elevated Slims Cabinets – Open
- Elevated Cabinet – Open provides a lateral access to storing standard letter-size binders in front-to-back orientation

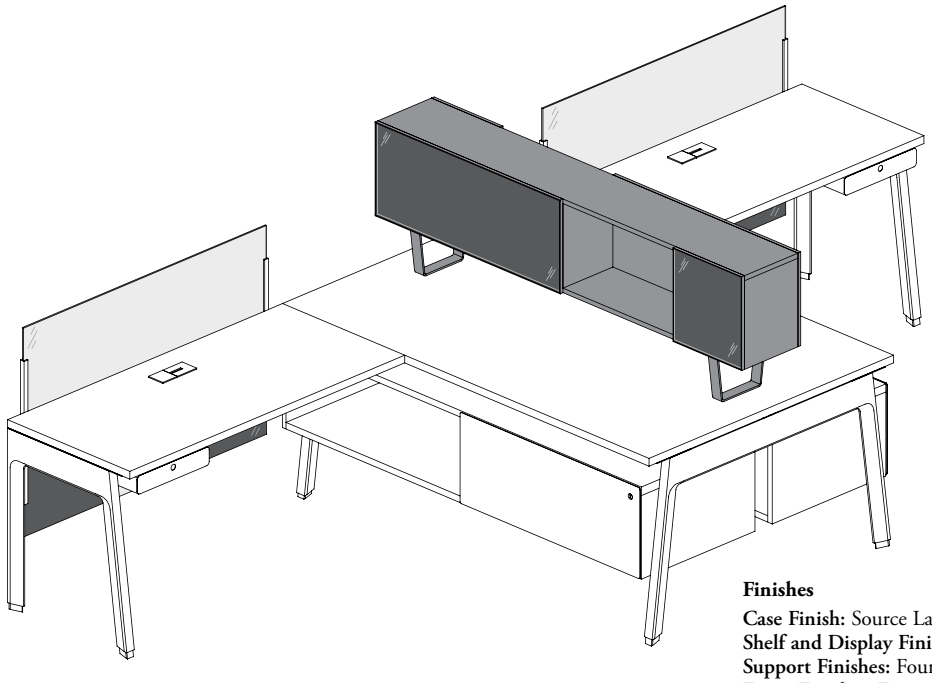

Finishes

Case Finish: Source Laminate
Shelf and Display Finishes: Foundation, Mica and Accent
Support Finishes: Foundation, Mica and Accent
Fascia Finishes: Feutre (Loft) and Back-Painted Glass*
* **Glass Fascias** are 5/32" (4 mm) tempered glass
Stitches Finishes: Carbon Coordinate (C), Shale Coordinate (E), Carrara Coordinate (G) or Umber Coordinate (M)

Single-Sided (S)

48" – 60" w

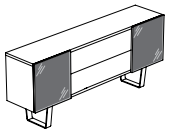

66" – 84" w

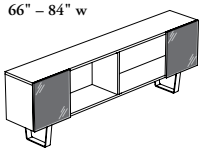

Shared – Open on Left (L) or Right (R) (Shown)

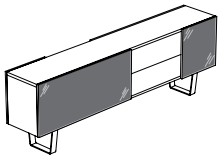

Elevated Slim Cabinet – Open (JNMSO)

- Only available with Metal Angled (A) profile supports
- Available in height of 22" to match with 51" datum height
- Widths include 48" – 84" (6" increments)
- Depth is 11" only
- Single-Sided configuration comes one (48" – 60" widths) or two open compartments (66" – 84" widths) and a faked front on both ends
- Shared configuration splits cabinets to provide an open compartment with faked front on both sides
- Single-Sided configuration can be specified with erasable/magnetic glass, felt tackboard or solid fascia option on faked fronts and on back panel and faked fronts on both sides of Shared configuration
- Only shared configuration can be specified left or right. Handedness is determined by the location of the open compartment when facing unit

desktop cabinet basics

The following outlines the features of Expansion Cityline Desktop Cabinets.

- Sliding doors are lockable
- Accessory Fascias can be specified on back panels of Shared Desktops Cabinets
- Cabinet dimensions allow one full row of letter-size binders

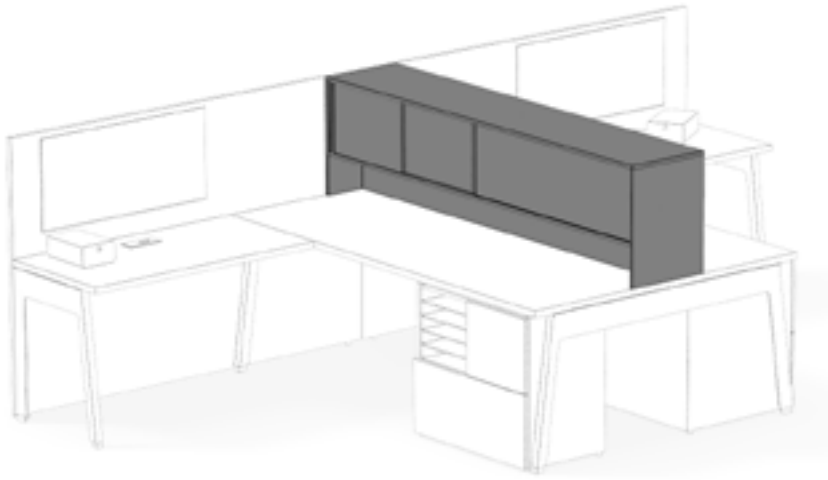

Finishes

Case and Divider Finish: Source Laminate
Door Finishes: Frost (FT)*, Back-Painted Glass* or Source Laminate**
* **Glass Doors** are 1/4" (6 mm) tempered glass
** **Solid Doors** are 11/16" thick
Pull Finishes: Foundation, Mica and Accent
Fascia Finishes: Fabric, Felt (Loft), Back-Painted Glass*** and Source Laminate**
** **Solid Fascias** are 11/16" thick
*** **Glass Fascias** are 5/32" (4 mm) tempered glass
Stitches Finishes: Carbon Coordinate (C), Shale Coordinate (E), Carrara Coordinate (G) or Umber Coordinate (M)

Desktop Cabinets (JNMD_)

- Are available in Single-Sided or Shared configuration
- Single-Sided configuration is non-handed and can be specified Open or with Sliding Doors
- Shared configuration splits cabinets to provide storage on both sides and can be specified Open or with Sliding Doors
- Shared configuration can be specified with erasable/magnetic glass, felt or fabric tackboard or solid fascia option on back panels of compartments
- Heights include:
  – 22" high for a 51" high datum
  – 27" high for a 57" high datum
- Widths include 30" – 84" (6" increments)
- Can be specified left or right. Handedness is determined by the location of doors/opening when facing unit

Single-Sided (S)

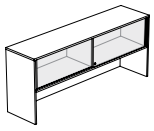

Shared – Doors on Left (L) (Shown) or Right (R)

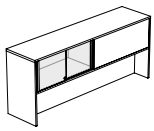

Desktop Cabinet – Sliding Doors (JNMDS)

- Single-sided cabinet comes with two compartments and each compartment have a Solid or Glass Sliding Door
- Shared cabinet comes with one compartment with two Solid or Glass Sliding Doors on both sides
- Each door comes with a sliding door pull

Single-Sided (S)

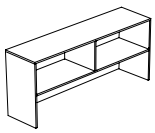

Shared – Open on Left (L) (Shown) or Right (R)

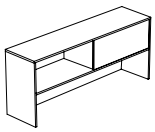

Desktop Cabinet – Open (JNMDO)

- Single-sided cabinet comes with two open compartments
- Shared cabinet comes with one open compartment on both sides

elevated cabinet with sliding doors, elevated slim cabinets & desktop cabinets basics (continued)

elevated cabinet with sliding doors or elevated slim cabinets datum heights & alignments

- Match with screen or storage of 51" datum height only
- Restrictions apply when a mounted storage is used in combination with a screen. For more details, refer to Workstation Screens section
- Elevated Cabinets mounted on 18" deep worksurfaces must be placed against a wall for stability if nothing else is attached toward the front of the workstation

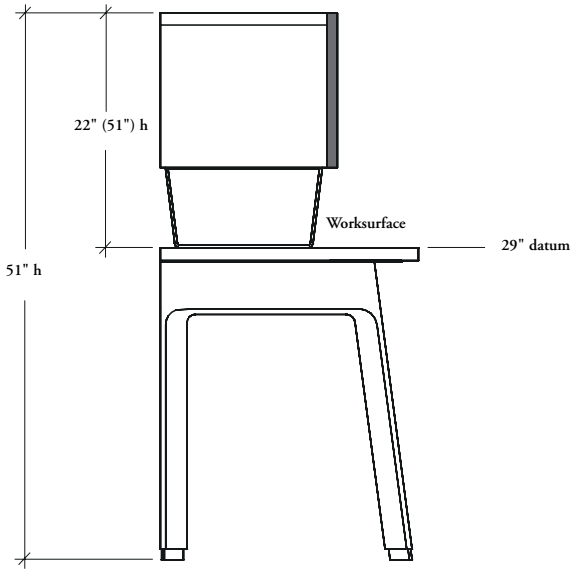

Elevated Cabinet with Sliding Doors

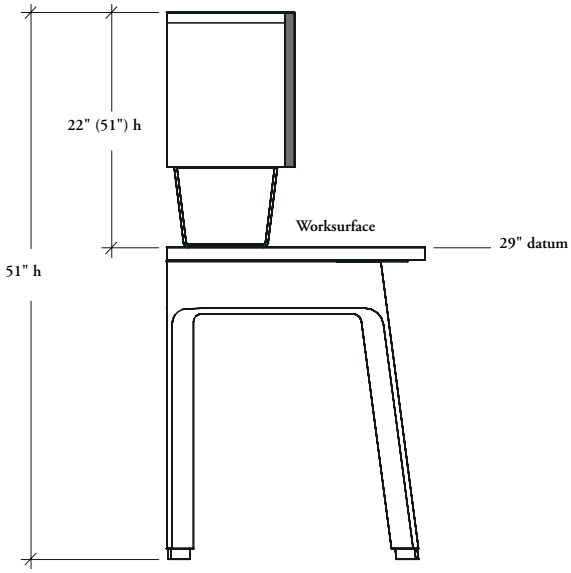

Elevated Slim Cabinet – Open (JNMSO)

desktop cabinets datum heights & alignments

- Are available in two Teknion standard datum heights, 51" and 57" high
- Restrictions apply when a mounted storage is used in combination with a screen. For more details, refer to Workstation Screens section
- Desktop Cabinets mounted on 18" deep worksurfaces must be placed against a wall for stability if nothing else is attached toward the front of the workstation

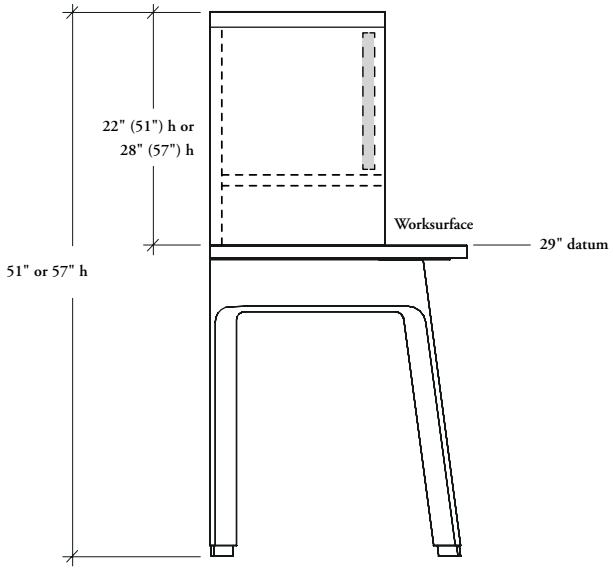

planning with elevated desk shelf, elevated cabinets with sliding doors, elevated slim & desktop cabinets

The following should be considered when planning with Expansion Cityline Elevated Desk Shelf, Elevated Cabinet with Sliding Doors, Elevated Slim or Desktop Cabinets.

Can be installed on- or off-module

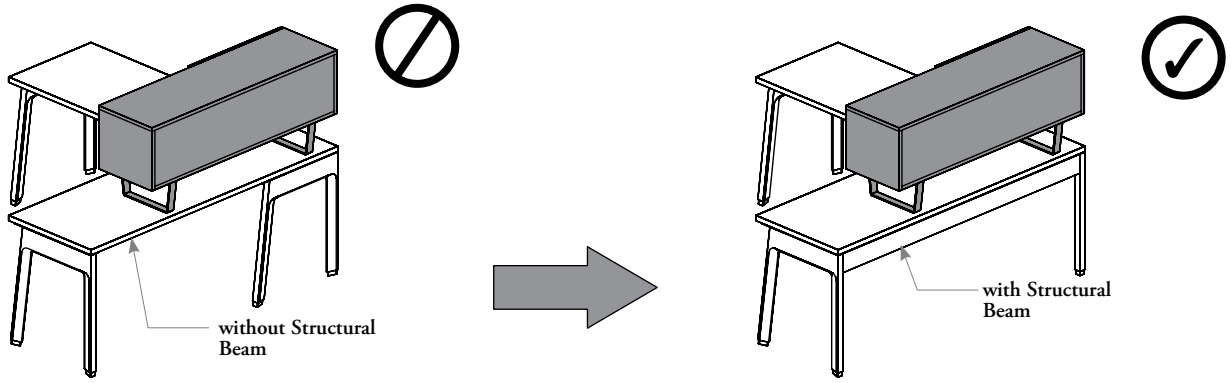

Off-modularity is allowed only when installed on a worksurface supported by a structural beam. On-modularity is always allow but the use of additional Worksurface Reinforcement Channel is recommended

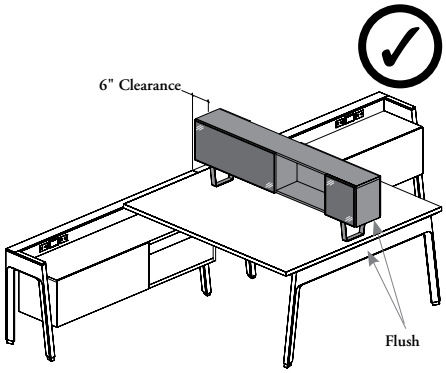

Can be placed on-module on an exposed beam worksurface but the shelf or the cabinet must be specified 6" narrower than the worksurface on which it is mounted

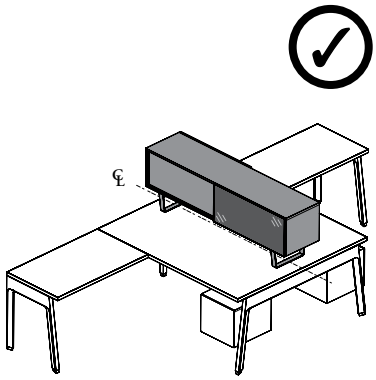

When a shelf or a shared cabinet is mounted on a double-sided worksurface, the mounted storage must be centered in depth

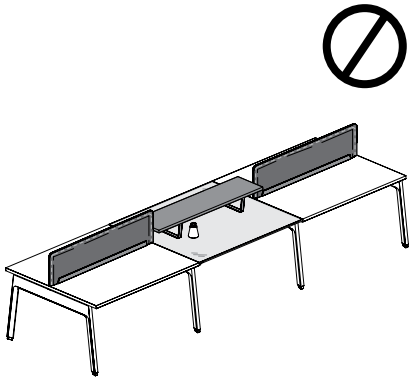

Elevated Desk Shelf, Elevated Cabinets with Sliding Doors, Elevated Slim and Desktop Cabinets **cannot** be installed on a Writable Glass Worksurface

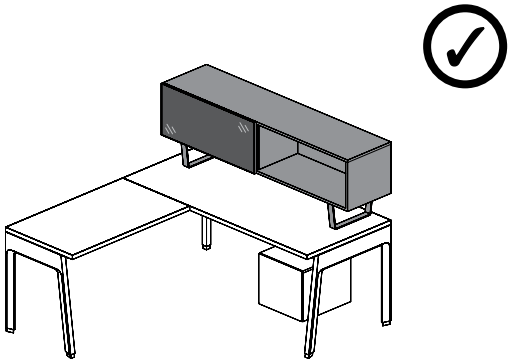

A shelf or a single-sided cabinet can be installed flush with rear edge of single-sided worksurface

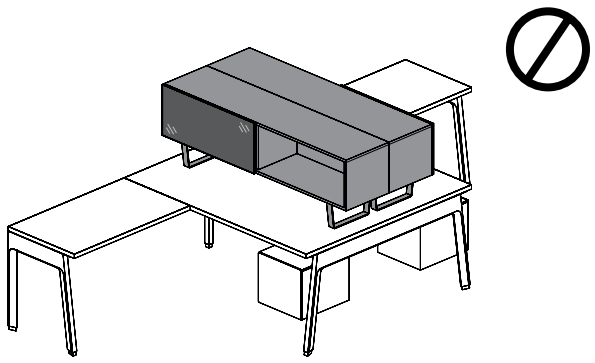

Two single-sided cabinets **cannot** be installed back-to-back on double-sided worksurfaces. Use the shared configuration for this application

planning with elevated desk shelf, elevated cabinet with sliding doors, elevated slim & desktop cabinets (continued)

with access door or grommet – off-modularity

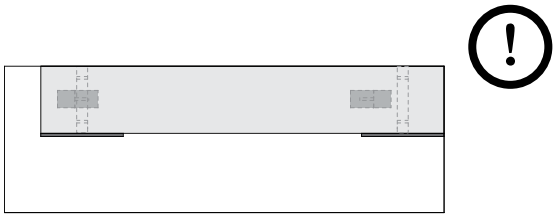

Warning, an off-module Elevated Cabinet could interfere with an Access Door or grommets. Use specification software appropriately

with expansion grommet mounted mast arm

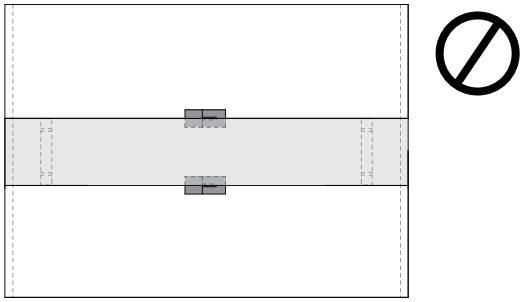

A Mast Monitor Arm **cannot** be used

with acces door or grommet – on-modularity

Elevated Cabinets can be installed on-module in most applications. Three configurations are known where the cabinet support interferes with an Access Door or grommet:

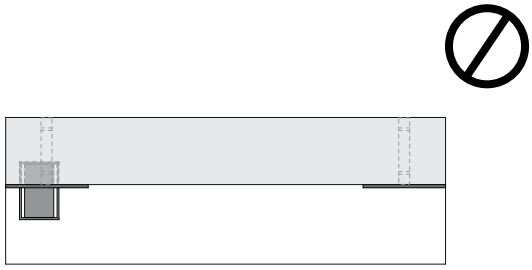

A single-sided elevated cabinet **cannot** be installed on-module on a single-sided worksurface when its Access Door is specified in end position

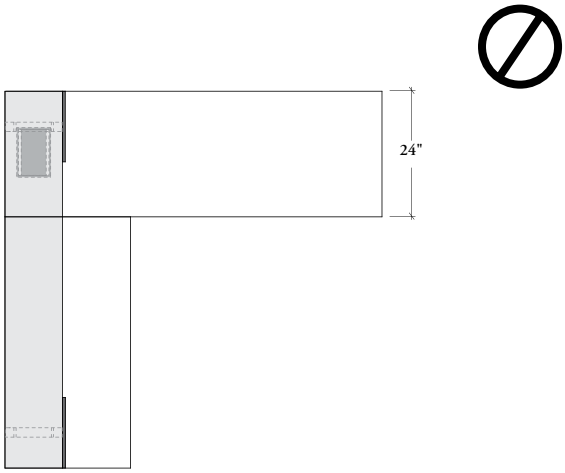

A single-sided elevated cabinet **cannot** be installed on-module on a set of perpendicular worksurfaces when an Access Door is specified in end position on the 24" deep main worksurface

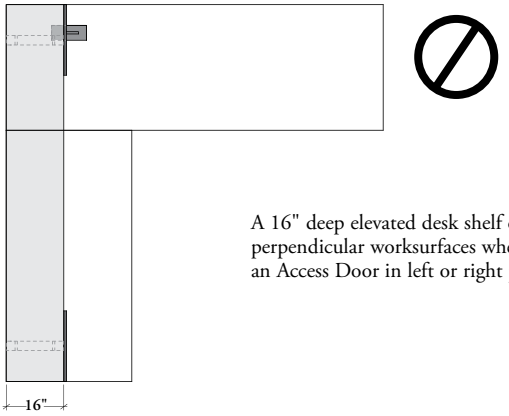

A 16" deep elevated desk shelf **cannot** be installed on-module on a set of perpendicular worksurfaces when the main worksurface is specified with an Access Door in left or right position, or with grommets at both ends

lateral desktop cabinet basics

The following outlines the features of Expansion Cityline Lateral Desktop Cabinets.

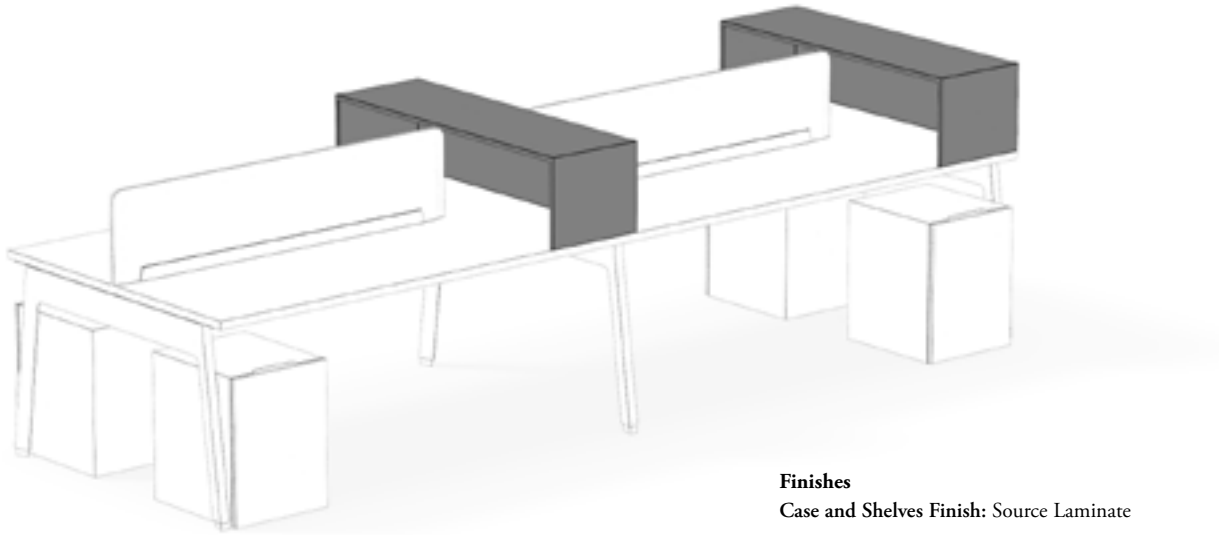

Finishes
Case and Shelves Finish: Source Laminate

Lateral Desktop Cabinet – Open (JNMLO)

- Heights include:
  - 13" high for a 42" high datum
  - 22" high for a 51" high datum
  - 28" high for a 57" high datum
- Depths include 15" or 18"
- Widths include 24", 30", 48" or 60"
- When specified, adjustable shelves come with holes at 1 1/4" intervals on the inner walls of side panels for shelf adjustment
- Only the 57" datum height allows storing two rows of standard letter-size binders
- The number of compartments and shelves varies dependently with cabinet height and width. See below for details

42" Datum Height

24" or 30" w

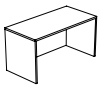

One Open Compartment

48" or 60" w

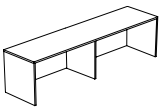

Two Open Compartments

51" Datum Height

24" or 30" w

Two Open Compartments with one Adjustable Shelf

48" or 60" w

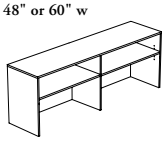

Four Open Compartments with two Adjustable Shelves

57" Datum Height

24" or 30" w

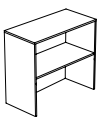

Two Open Compartments with one Fixed Shelf

48" or 60" w

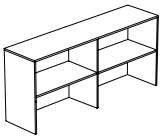

Four Open Compartments with two Fixed Shelves

datum heights & alignments

- Are available in three Teknion standard datum heights, 42", 51" and 57" high
- Restrictions apply when a mounted storage is used in combination with a screen. For more details, refer to Workstation Screens section

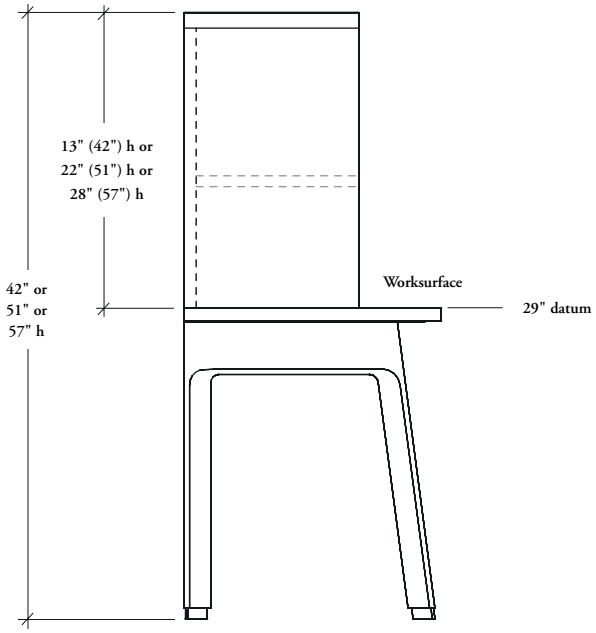

planning with lateral desktop cabinet

The following should be considered when planning with Expansion Cityline Lateral Desktop Cabinets.

Unlike other mounted storage, the Lateral Desktop Cabinet can be installed on unstructured worksurfaces

used on a single-sided workstation

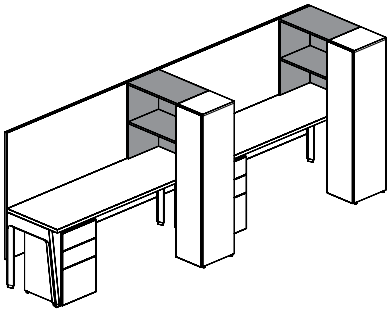

Lateral Desktop Cabinet with 24" or 30" deep single-sided worksurface

- Used laterally on the end of a 24" or 30" deep worksurface. The cabinet width matches with worksurface depth
- Can also be used in combination with a Freestanding Towers for more storage and lateral intimity

used on a double-sided workstation

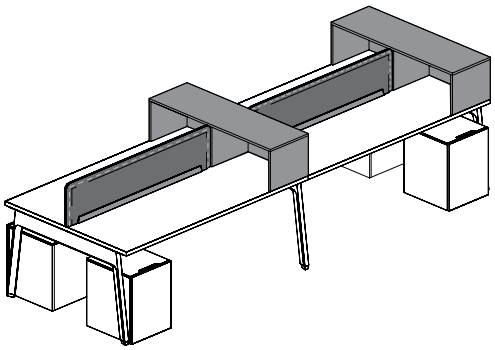

Lateral Desktop Cabinet with 48" or 60" deep double-sided worksurface

Can be used in collaborative workstations in combination with an Add-On Screen – Worksurface-Mounted for lateral storage and space division

used on a single-sided or double-sided workstation

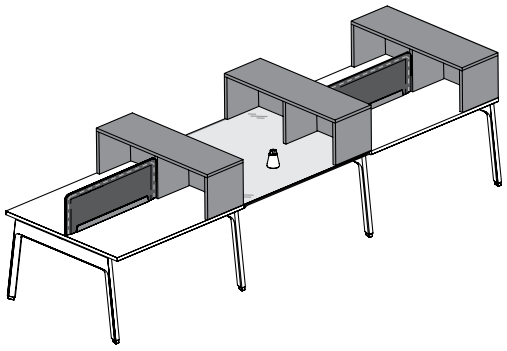

Cannot be used on a Writable Glass Worksurface

Lateral Cabinet **cannot** be installed on any Writable Glass Worksurface

lock chart – mounted storage

- If specified, all closed storage come with a lock and key set and can be keyed alike or randomly. A Key Chart must accompany every order, otherwise orders will be shipped keyed randomly
- All Elevated Cabinets with Sliding Doors are **not** lockable

	number of locks
30" – 84" w 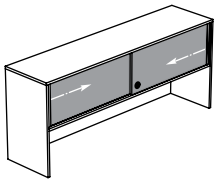 JNMDS (Single-Sided)	1 x
48" – 84" w 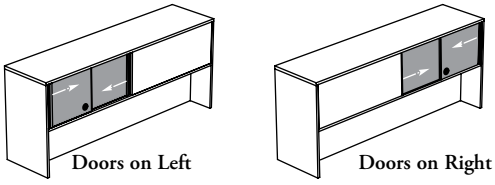 Doors on Left Doors on Right JNMDS (Shared)	2 x

Lockable Double Doors Lockable Single Door

grain direction – mounted storage

The following outlines the grain directions of Expansion Cityline mounted storage units.

elevated desk shelf

Top

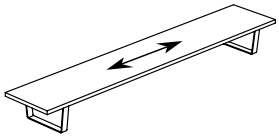

lateral desktop cabinet

Front

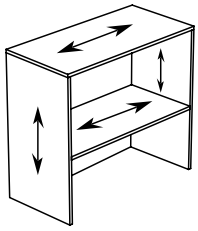

Back

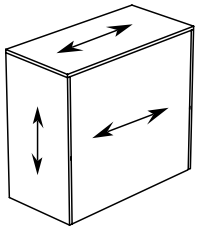

elevated cabinet with sliding doors

Front

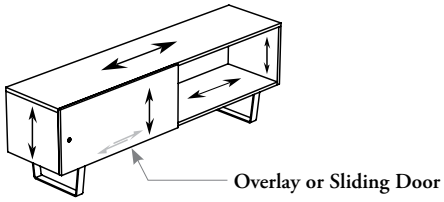

Backs

Single-Sided Cabinet

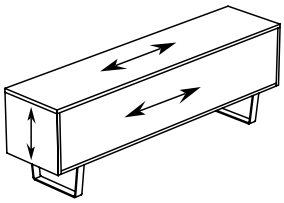

Shared Cabinet

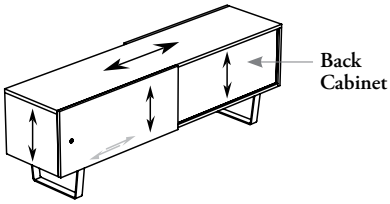

elevated slim cabinet

Front & Fascias

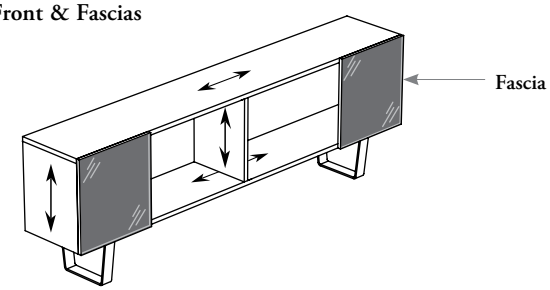

Back

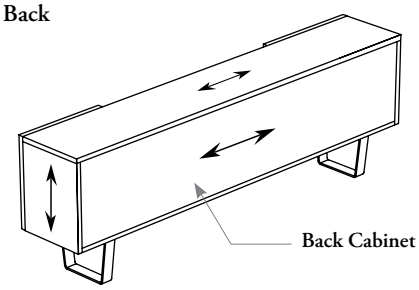

desktop cabinet with sliding doors

Front

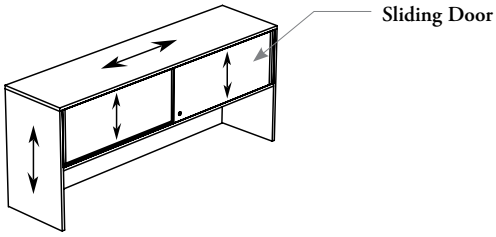

Backs

Single-Sided Cabinet

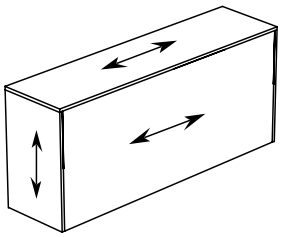

Shared Cabinet

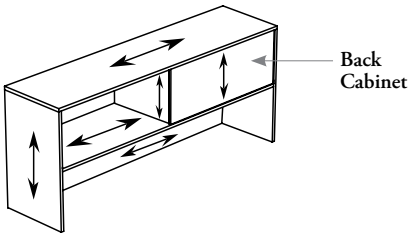

credenzas

credenzas

UNDERSTANDING MOBILE CREDENZA 630

MOBILE CREDENZA BASICS 631

UNDERSTANDING FREESTANDING CREDENZAS. 632

FREESTANDING CREDENZA BASICS 633

DRAWER WIDTHS – MOBILE & FREESTANDING CREDENZA . . . 637

PLANNING WITH MOBILE CREDENZA. 643

PLANNING WITH FREESTANDING CREDENZAS 644

INTEGRATING ACCESSORIES (OPTIONAL) – MOBILE & FREESTANDING CREDENZA 647

LOCK CHART – MOBILE & FREESTANDING CREDENZA 649

GRAIN DIRECTION – MOBILE & FREESTANDING CREDENZA . . 650

understanding mobile credenza

Mobile Credenza provides drawers and open storage and complements any workstation. The following outlines the various options available.

EZ compatible Credenzas can be used in an EZ Fence environment, since they are freestanding

Mobile Credenza can be used alone or in perpendicular applications

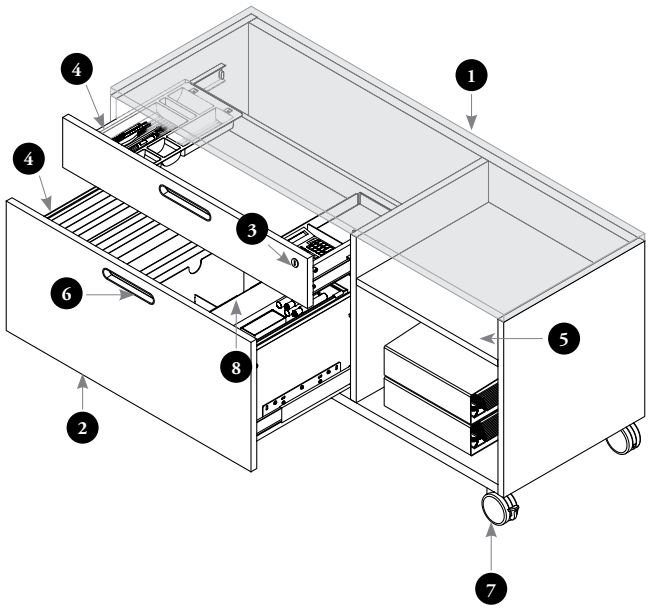

The Mobile Credenza can be specified with a combination of a small and a large drawers with open sections only

1. **Configuration:** Only available Single-Sided
2. **Drawer Front Style:** Are available in metal (M) or solid (S)
3. **Locks and Keys:** Available with locks, keyed alike to match other storage components or keyed randomly for a dedicated lock
4. **Drawers:** Available with small box (3" height) and file drawers only which can accommodate letter- or legal-size papers
5. **Adjustable Shelf:** Can be adjustable in two positions
6. **Pull Style:** Available with Cityline Recessed pulls
7. **Casters:** Two lockable casters and two no lock casters
8. **Accessories:** Box drawer can accommodate a Pencil Tray (included) and optional Box Drawer Organizer (JNAOS). File drawer can accommodate an Hanging File Bar (included) and optional File Drawer Organizers (JNASO). Refer to Accessories sections for details

mobile credenza basics

mobile credenza

- Consists of one open section and two drawers
- Drawer section can be specified left or right, handedness being determined by the location of the drawer as viewed by the user

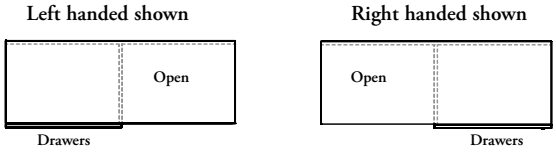

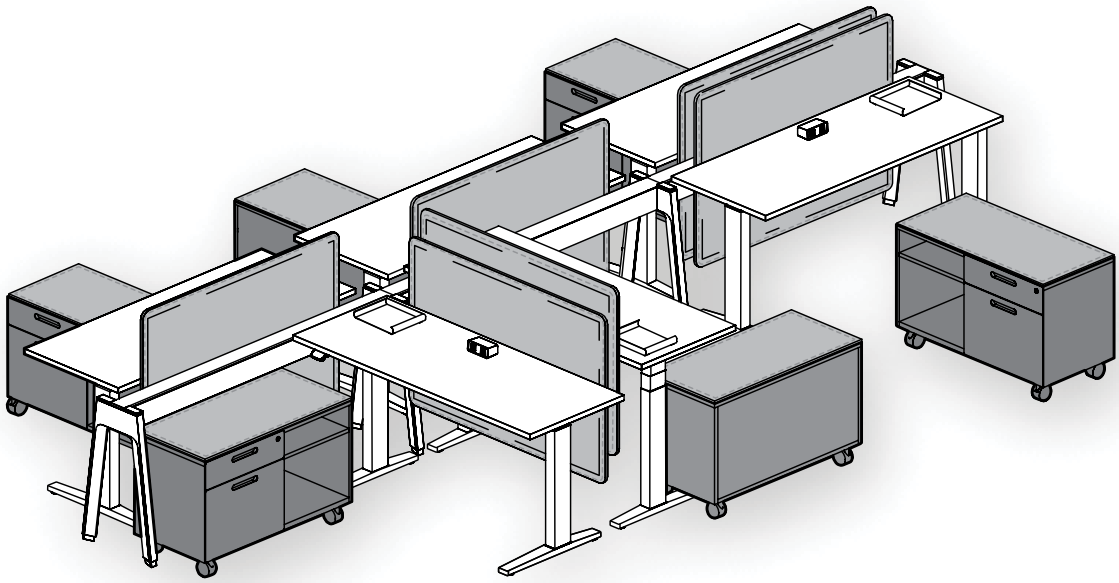

Finishes

Case Finish (top, bottom, back, divider, shelf and sides)**:** Source Laminate
Caster Finishes: Black
Metal Drawer Fronts Finish: Foundation, Mica and Accent
Laminate Drawer Front Finishes: Source Laminate and Foundation Laminate
Edge Trim Finish: Edge Trim Colors are available with laminate drawer front only
Pull Finishes: Foundation, Mica and Accent

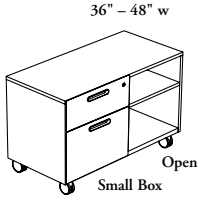

Small Box and File Drawers

Mobile Credenza (JNFC)

- 23" high ,18" deep and in widths of 36", 42" or 48"
- Only small box/file configuration is available
- Two front styles are available: Metal (M) or Solid (S) and come with pulls
- Have 2 lockable casters in front
- Counterweights are included

understanding freestanding credenzas

Freestanding Credenzas are available in a variety of styles to complement any workstation. The following outlines the various options available.

The 24" high Freestanding Credenzas can be used alone or in perpendicular applications

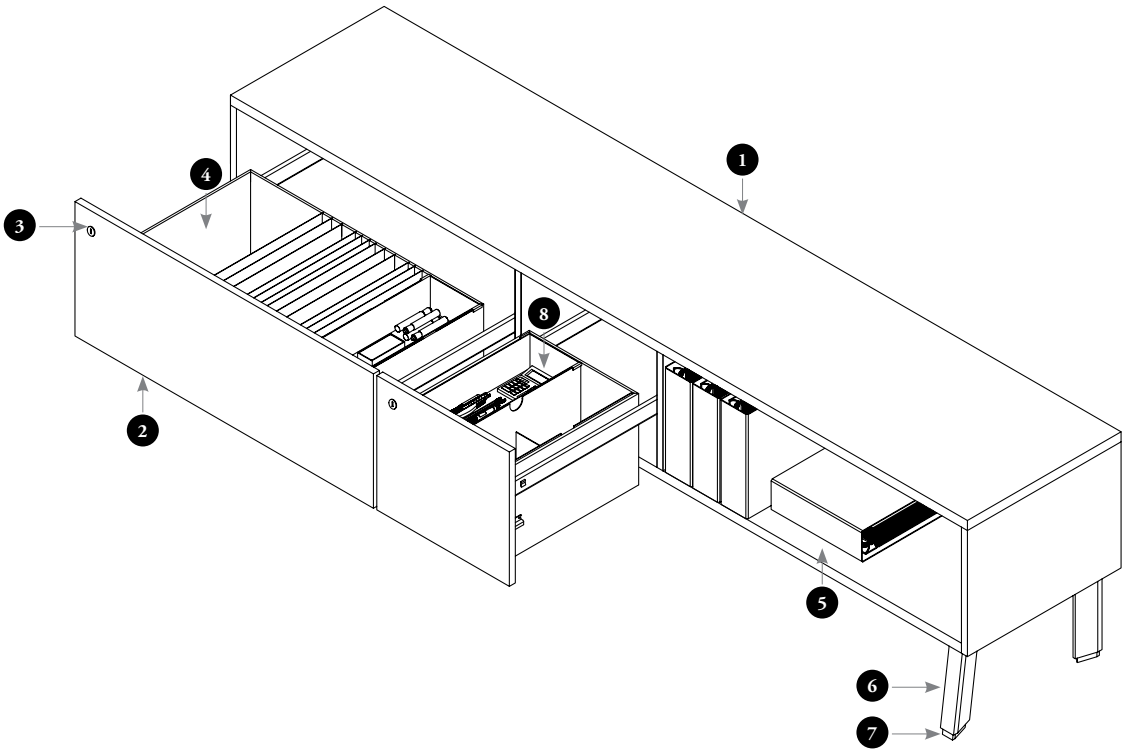

The Freestanding Credenzas can be specified with full drawer sections, with drawer and open sections, with a combination of small and large drawers with an open section or with all open sections only

1. **Configuration:** Only available Single-Sided
2. **Front Style:** Are available in metal (M), Metal with Pull (N), Solid (S) or Solid with Pull (T). Metal (M) or Solid (S) Front Style come with touch-to-open drawer slides (no pull). Metal with Pull (N), or Solid with Pull (T) come with Cityline Recessed (C) pulls
3. **Locks and Keys:** Available with locks, keyed alike to match other storage components or keyed randomly for a dedicated lock
4. **Drawers:** Available with filing drawers only which can accommodate letter- or legal-size papers
5. **Open Section:** Can accommodate letter-size binders
6. **Foot Style:** Come with four angled foot
7. **Levelers:** Allow a leveling range of 3" (-3/16", +2 13/16")
8. **Accessories:** File drawers can accommodate optional File Drawer Organizers (JNASO) and Hanging File Bars (JNFALB). Refer to Freestanding Storage & Accessories section for details

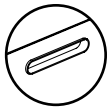

Cityline Recessed (C)

freestanding credenza basics

lateral file credenza

- Provide full drawer storage
- Available 24" high and 18" deep only
- Available in widths from 24" – 72" (6" increments)
- Consists of one or two filing sections depending on width

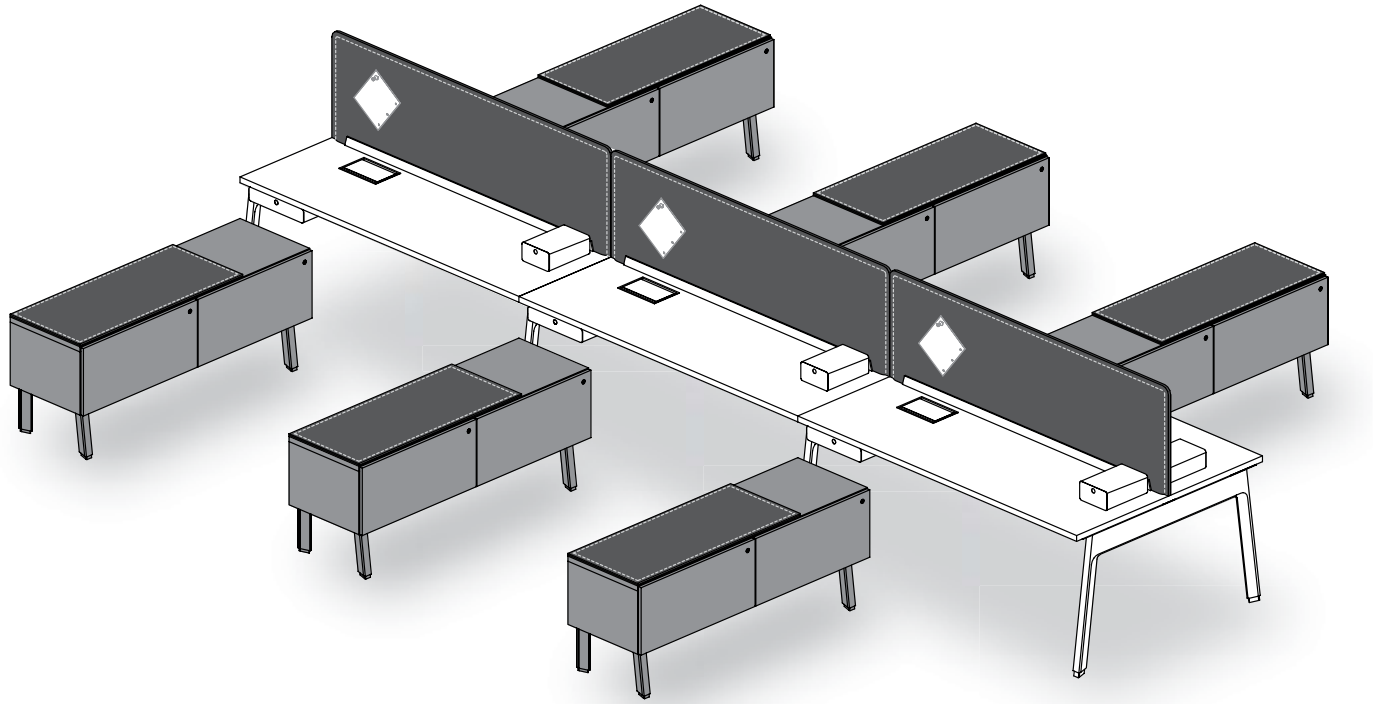

Finishes

Case Finish (top, bottom, back, divider and sides)**:** Source Laminate
Angled Foot Finishes: Foundation, Mica and Accent
Metal Drawer Fronts Finish: Foundation
Pull Finishes (If applicable) : Foundation, Mica and Accent
Laminate Drawer Fronts Finishes: Source Laminate and Foundation Laminate
Edge Trim Finish: Edge Trim Colors are available with laminate drawer front only

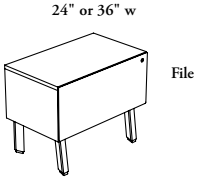

One File Drawer

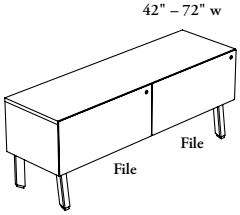

Two File Drawers

Freestanding Credenza – Lateral File (JNFCLL)

- 24" or 36" wide credenzas have one file drawer
- 42" – 72" wide credenzas have two file drawers
- Four front styles are available: metal (M), metal with pull (N), solid (S) or solid with pull (T)
- All credenzas have 4 angled feet
- Counterweights are included inside credenza for stability
- The two file drawers configuration comes with independent locks (if specified) and an anti-tilt mechanism that prevents opening more than one drawer at a time
- Power and data **cannot** pass through credenzas

freestanding credenza basics (continued)

open with lateral file credenza

- Available 24" high and 18" deep only
- Available in widths from 42" – 84" (6" increments)
- Consists of one open section and one filing section
- Drawer section can be specified left or right, handedness being determined by the location of the drawer as viewed by the user

Left handed shown

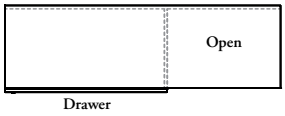

Right handed shown

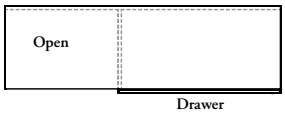

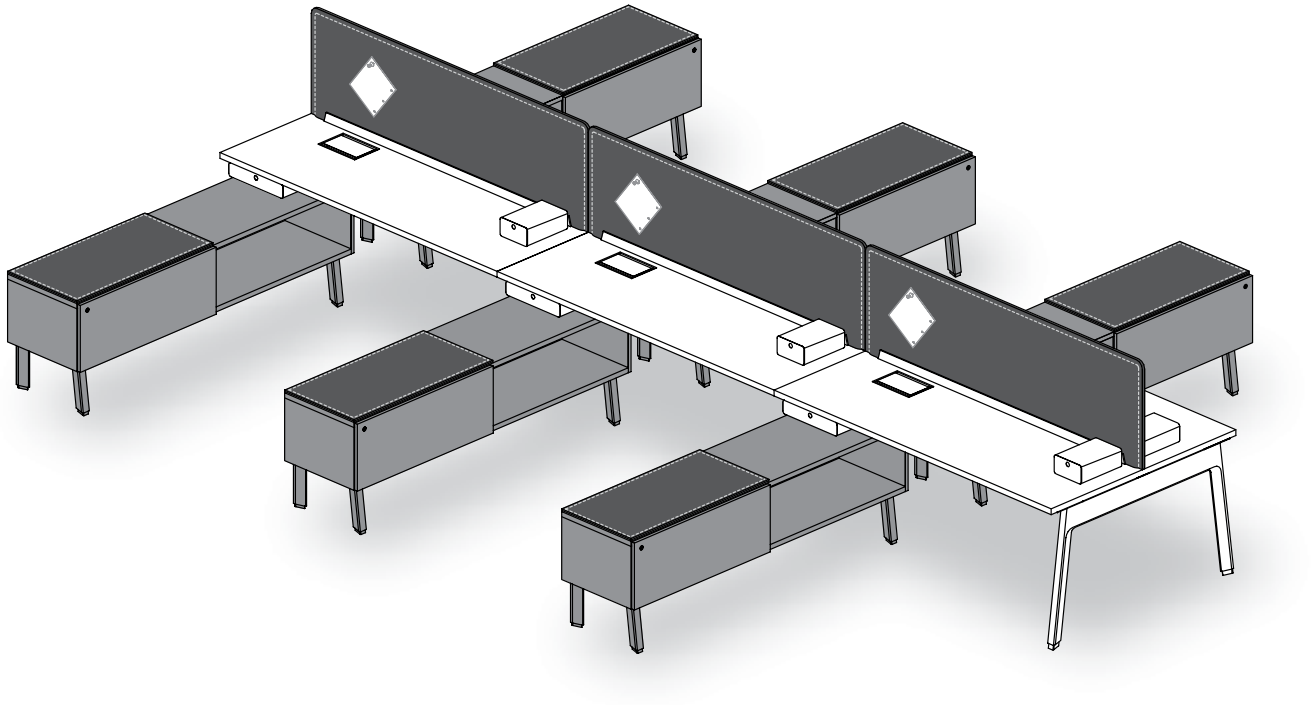

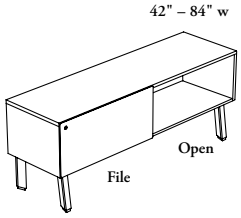

One File Drawer

Freestanding Credenza – Open with Lateral File (JNFCOL)

- Available in a file drawer and a single-height opening configuration
- Four front styles are available: metal (M), metal with pull (N), solid (S) or solid with pull (T)
- All credenzas have 4 angled feet
- Counterweights are included inside credenza for more stability
- Power and data **cannot** pass through credenzas

freestanding credenza basics (continued)

open credenza

- Provide full open compartment
- Available 24" high and 18" deep only
- Available in widths from 24" – 84" (6" increments)
- Consists of one or two open sections depending on width

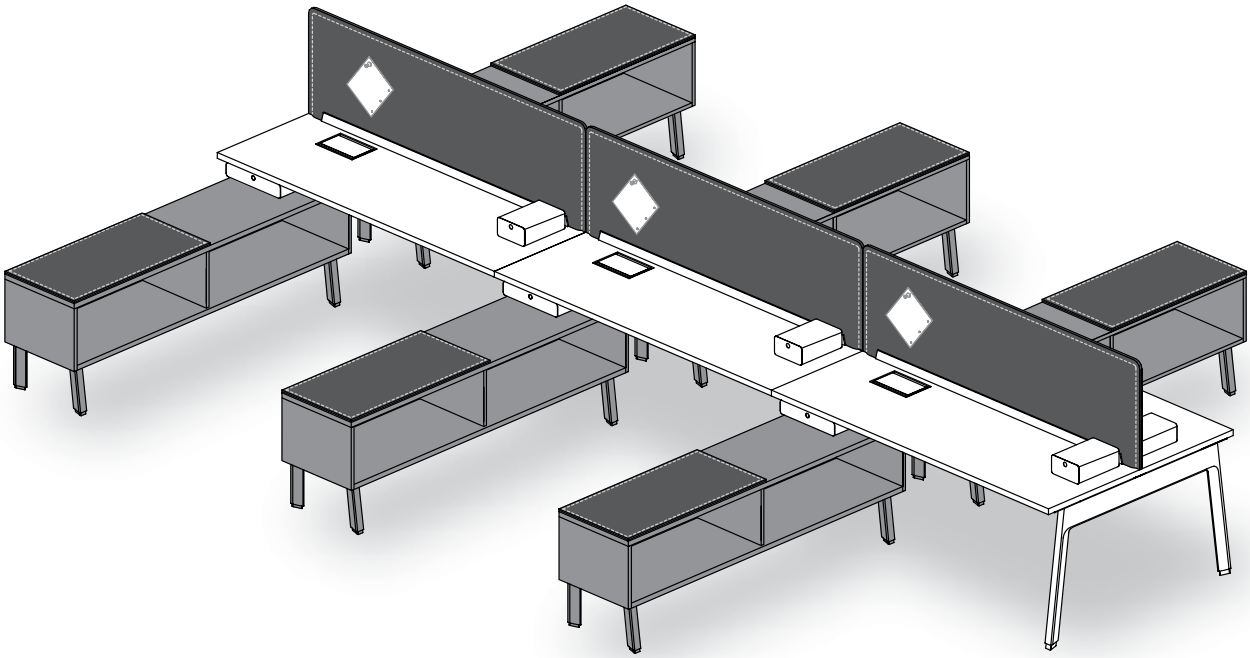

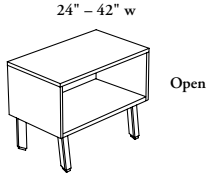

One Open Compartment

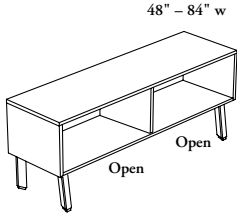

Two Open Compartments

Freestanding Credenza – Open (JNFCOO)

- 24" or 42" wide credenzas have one open compartment
- 48" – 84" wide credenzas have two open compartments
- Use in single-sided configuration only
- All credenzas have 4 angled feet
- Power and data **cannot** pass through credenzas

freestanding credenza basics (continued)

open with combo file credenza

- Available 24" high and 18" deep only
- Available in widths from 54" – 84" in 6" increments
- Consists of one open section, one small filing section and one large filing section
- Small drawer is always 16" wide. It is placed between the large file drawer and the open section
- Large drawer and open section vary dependently on width of credenza. They are placed at both ends of the credenza
- Drawer section can be specified left or right, handedness being determined by the location of the drawers as viewed by the user

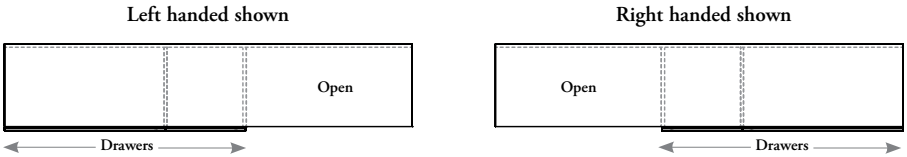

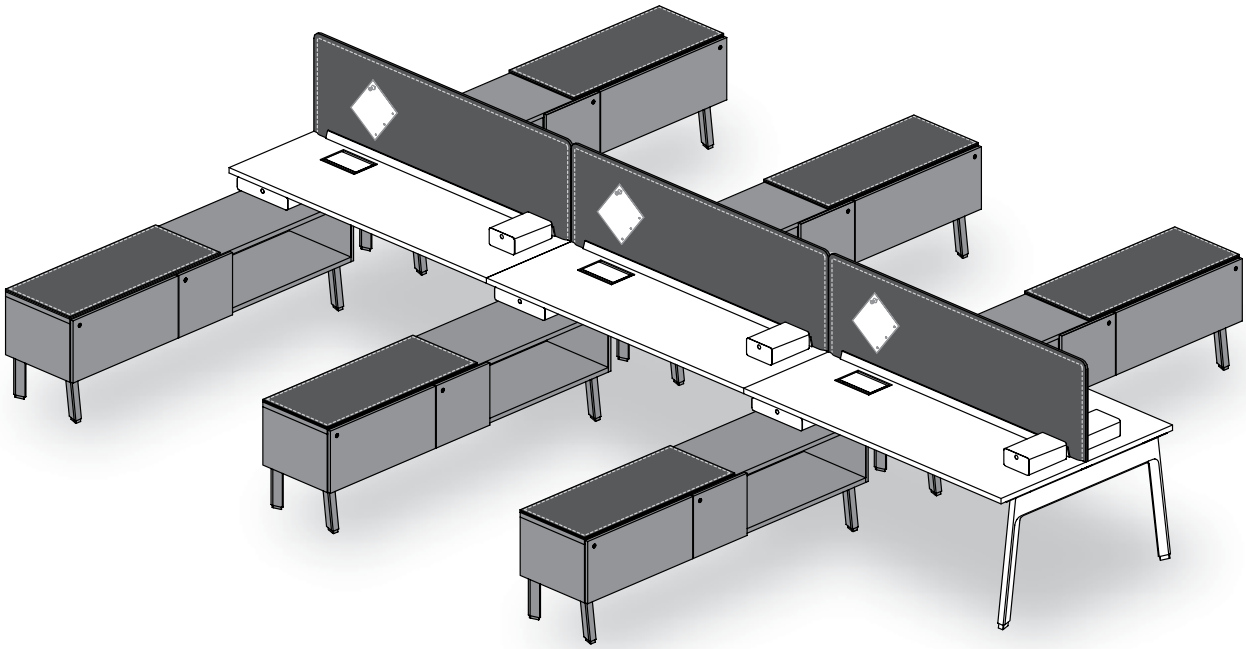

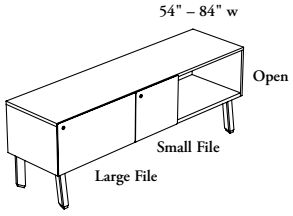

Two File Drawers

Freestanding Credenza – Open with Combo File (JNFCOC)

- Available in two file drawers and a single-height opening configuration
- Four front styles are available: metal (M), metal with pull (N), solid (S) or solid with pull (T)
- Counterweights are included inside credenza for more stability
- Comes with independent locks (if specified) and an anti-tilt mechanism that prevents opening more than one drawer at a time
- Power and data **cannot** pass through credenzas

drawer widths – mobile & freestanding credenza

The following illustrates Expansion Cityline credenzas drawer and open sections nominal widths.

36" Width

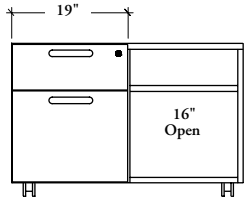

42" Width

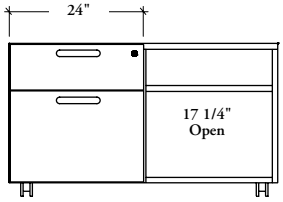

48" Width

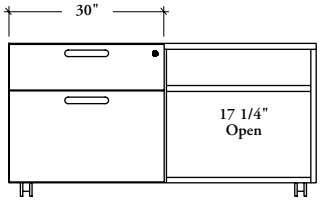

Mobile Credenza (JNFC)

24" Width

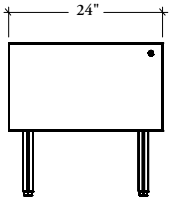

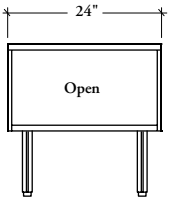

30" Width

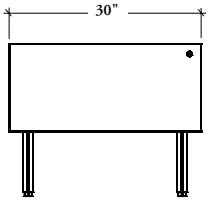

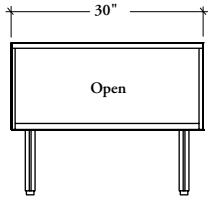

36" Width

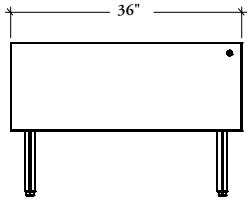

Lateral File Credenza (JNFCLL)

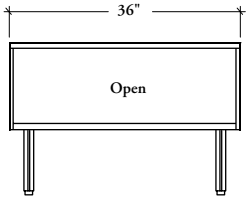

Open Credenza (JNFCOO)

42" Width

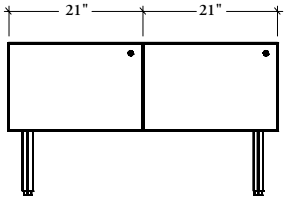

Lateral File Credenza (JNFCLL)

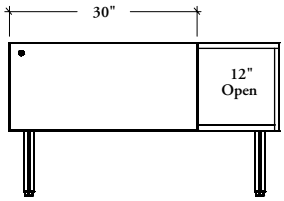

Open with Lateral File Credenza (JNFCOL)

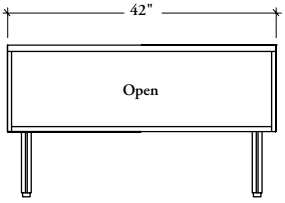

Open Credenza (JNFCOO)

48" Width

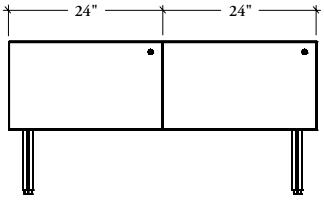

Lateral File Credenza (JNFCLL)

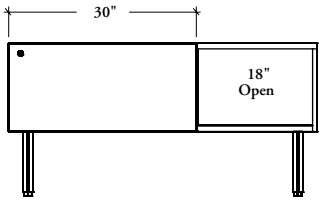

Open with Lateral File Credenza (JNFCOL)

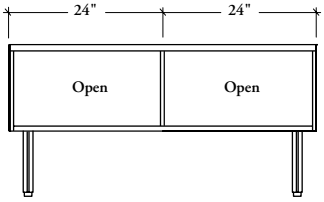

Open Credenza (JNFCOO)

drawer widths – mobile & freestanding credenza (continued)

54" Width

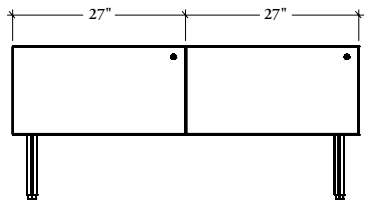

Lateral File Credenza (JNFCLL)

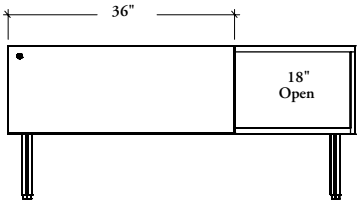

Open with Lateral File Credenza (JNFCOL)

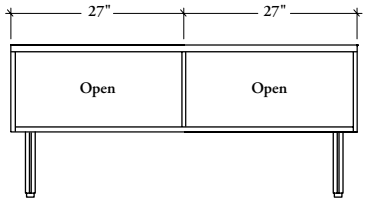

Open Credenza (JNFCOO)

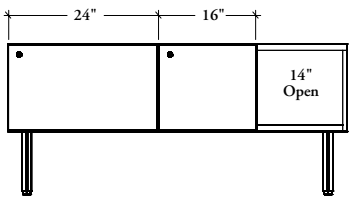

Open with Combo File Credenza (JNFCOC)

60" Width

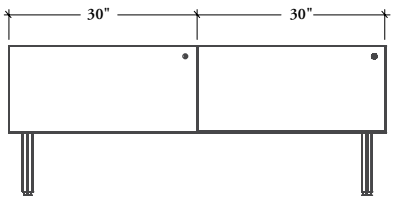

Lateral File Credenza (JNFCLL)

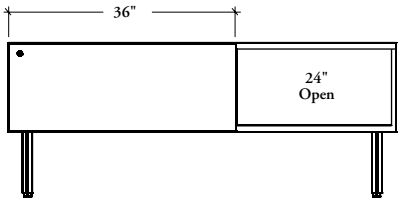

Open with Lateral File Credenza (JNFCOL)

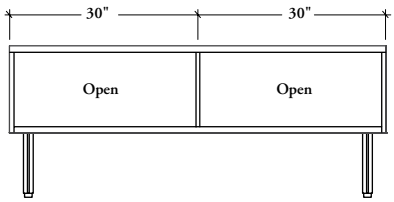

Open Credenza (JNFCOO)

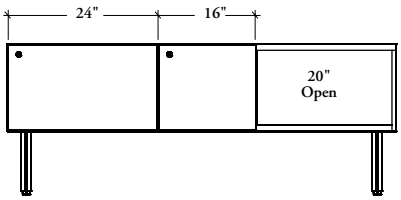

Open with Combo File Credenza (JNFCOC)

drawer widths – mobile & freestanding credenza (continued)

66" Width

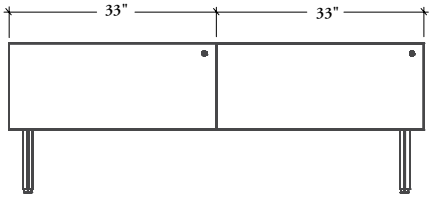

Lateral File Credenza (JNFCLL)

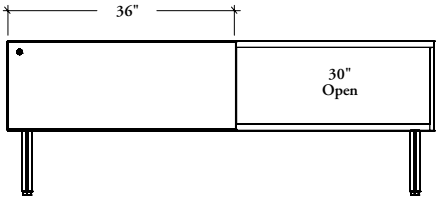

Open with Lateral File Credenza (JNFCOL)

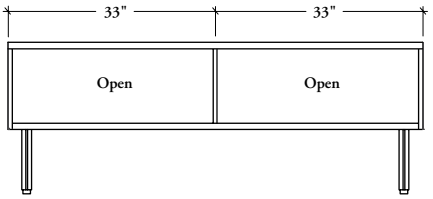

Open Credenza (JNFCOO)

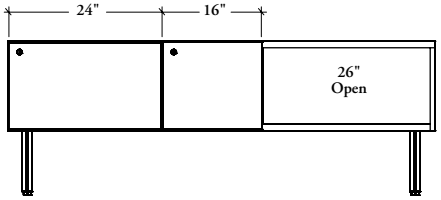

Open with Combo Drawers Credenza (JNFCOC)

72" Width

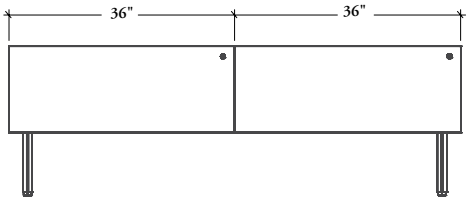

Lateral File Credenza (JNFCLL)

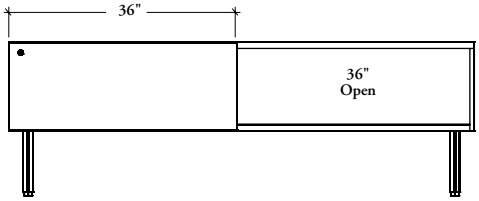

Open with Lateral File Credenza (JNFCOL)

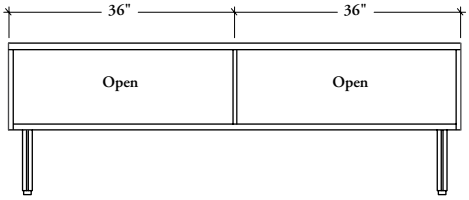

Open Credenza (JNFCOO)

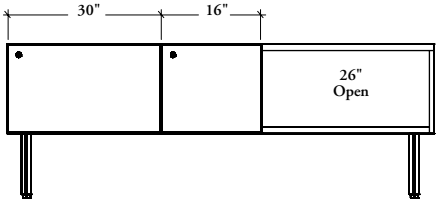

Open with Combo Drawers Credenza (JNFCOC)

drawer widths – mobile & freestanding credenza (continued)

78" Width

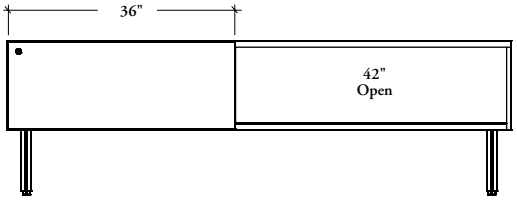

Open with Lateral File Credenza (JNFCOL)

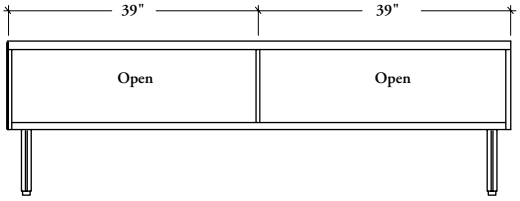

Open Credenza (JNFCOO)

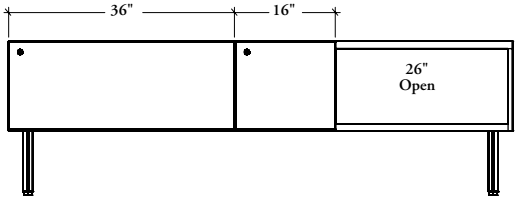

Open with Combo File Credenza (JNFCOC)

84" Width

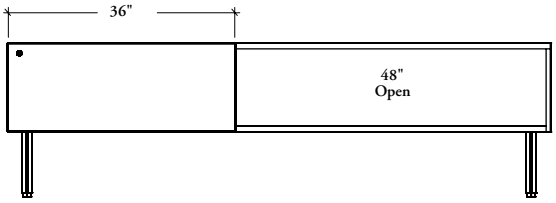

Open with Lateral File Credenza (JNFCOL)

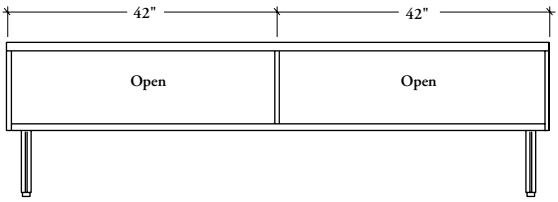

Open Credenza (JNFCOO)

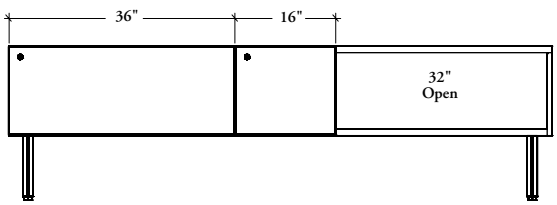

Open with Combo File Credenza (JNFCOC)

drawer widths – mobile & freestanding credenza (continued)

Lateral file drawer storage capacities are shown below for Mobile Credenzas.

- 12" deep drawers do **not** have full extension files, therefore Filing must be front-to-back **not** side-to-side
- For 19 and "24" wide file drawers only one front-to-back filing can be used (letter or legal)
- For 30" wide file drawers two front-to-back filing sections can be used (letter) or one filing section (legal)
- Hanging File Bars are supplied in sufficient quantity to accomplish all that is shown below

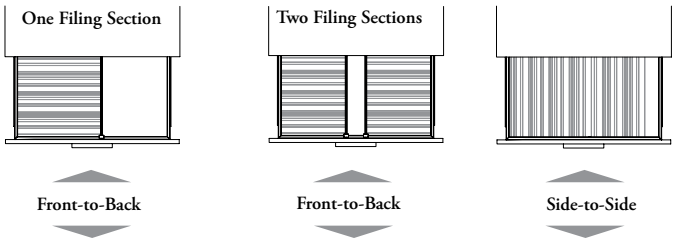

	One Filing Section Front-to-Back	Two Filing Sections Front-to-Back	Side-to-Side
19" wide drawers 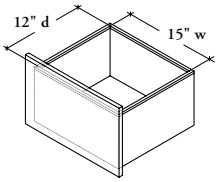	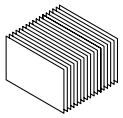 • Letter • Legal	**n/a**	**n/a**
24" wide drawer 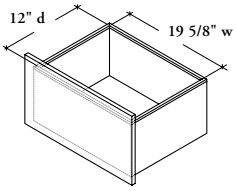	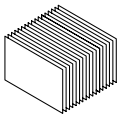 • Letter • Legal	**n/a**	**n/a**
30" wide drawer 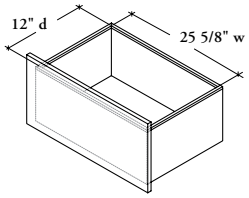	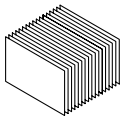 • Legal	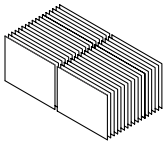 • Letter	**n/a**

Hanging File Bar (JNFALB) can be ordered separately for replacement of original bars

drawer widths – mobile & freestanding credenza (continued)

Lateral file drawer storage capacities are shown below for Freestanding Credenzas.

- Drawers have full extension slides
- Filing can be front-to-back and/or side-to-side
- The drawer inner-dimensions are listed below
- Hanging File Bars are supplied in sufficient quantity to accomplish all that is shown below

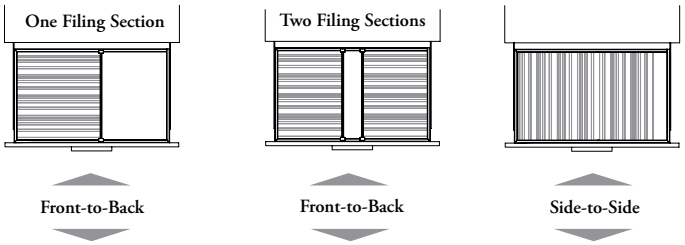

16" wide drawer

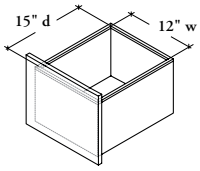

Front-to-Back	Front-to-Back	Side-to-Side
• Letter	n/a	• Letter • Legal

21" or 27" wide drawers

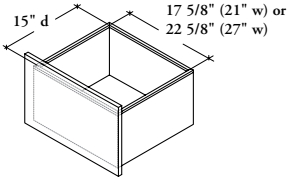

• Letter • Legal	n/a	• Legal

24" wide drawer

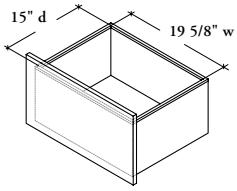

• Letter • Legal	n/a	• Legal

30" wide drawer

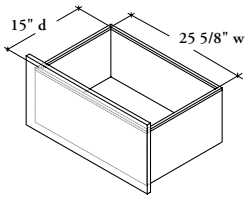

• Legal	• Letter	• Legal

33" wide drawer

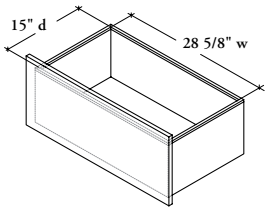

• Legal	• Letter	• Legal

36" wide drawer

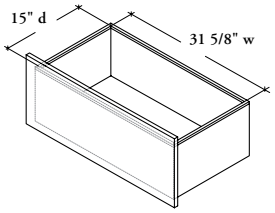

n/a	• Letter • Legal	• Legal

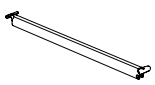

Hanging File Bar (JNFALB) can be ordered separately for replacement of original bars

planning with mobile credenza

The following should be considered with planning with Expansion Cityline Mobile Credenzas.

- It is always used independently from the desk structure
- **Cannot** support storage products or worksurfaces
- Power and data **cannot** pass through credenza
- The Navigate Height-Adjustable Table will extend over the entire depth of the Mobile Credenza, but extend beyond the end of the credenza. The leg will tuck under the side of the credenza
- The applications illustrated below are available with T- or C-Legs

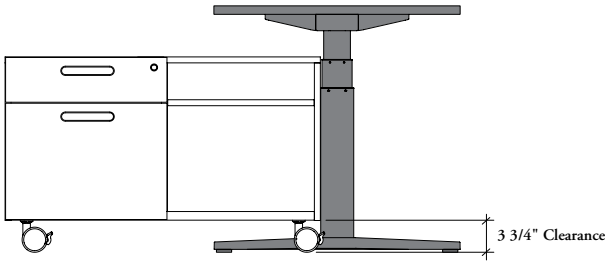

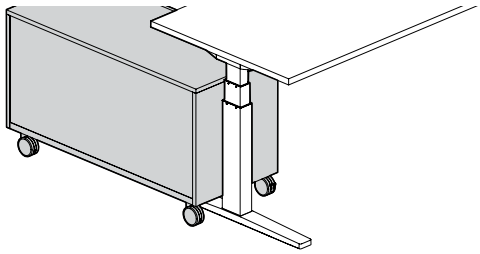

- The **Mobile Credenza** can be stored underneath any worksurface with a minimum height of 23"

Navigate Cityline Restricted Electric Base Mechanism (9M)

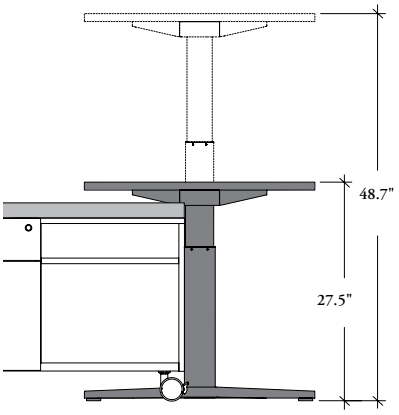

hiSpace or Navigate Extended Electric Base Mechanism (9E) and hiSpace Extended Electric – with Riser (9U)

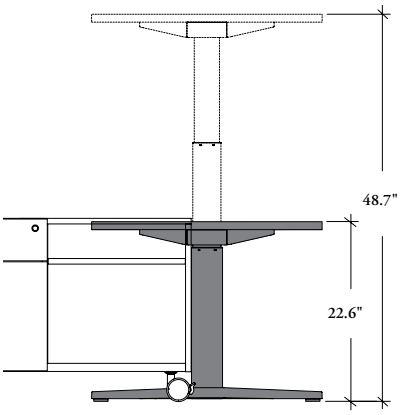

- It is recommended to specify a Cityline Restricted Electric Base Mechanism (9M) to avoid collision with the credenza
- Clearance with Mobile Credenza (23") is 1 1/4" when the Restricted Base Mechanism is at its lowest position
- The addition of a Seat Pad – Felt reduces this clearance by 5/8" and the Seat Cushion –Fabric reduces the clearance by 1 1/2"

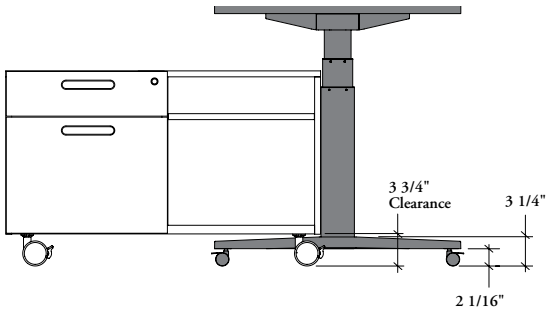

- The use of a Height-Adjustable Table Caster Kit (JNHCA) does not prevent the leg to tuck under the Mobile Credenza

planning with freestanding credenzas

The following should be considered with planning with Expansion Cityline Freestanding Credenzas.

- It is always used independently from the desk structure
- **Cannot** support storage products or worksurfaces
- Power and data **cannot** pass through credenzas

Freestanding Credenzas can be planned alone or perpendicularly to a desk

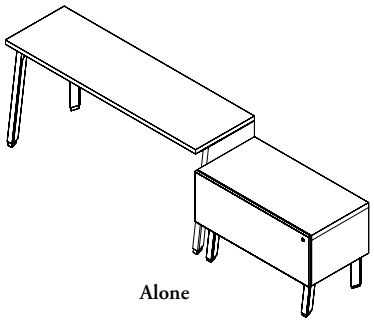

Alone

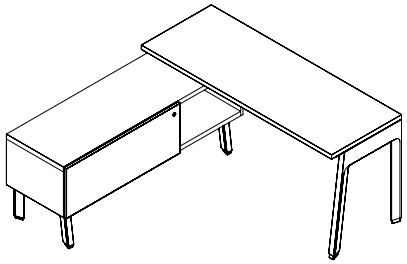

Perpendicularly

freestanding credenza alone application

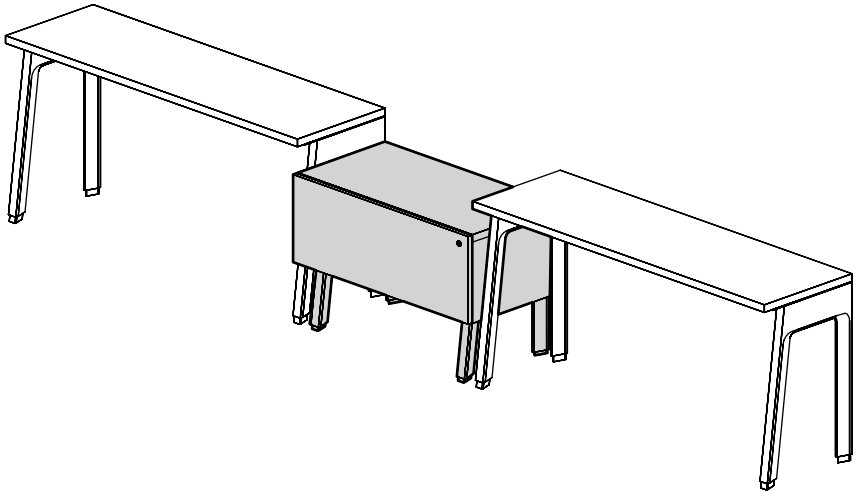

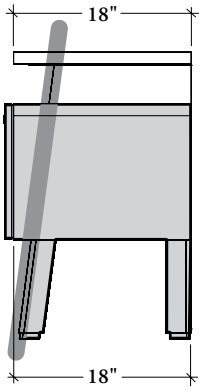

- The credenza can be used alone between two unconnected workstations
- 18" deep credenza can be used beside or between unconnected 18" deep workstations
- Leg positions on credenzas and desks align when specified the same depth

planning with freestanding credenzas (continued)

freestanding credenza parallel applications

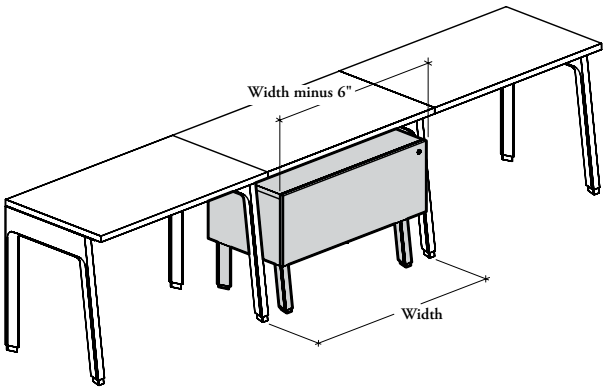

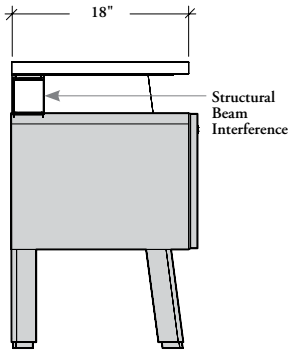

- **Cannot** be placed parallel with 18" and 36" deep workstations even if specified 6" less than the clearance available, the credenza would interfere with the structural beam
- When specified between two EZ Structural Legs, freestanding credenza can be specified the same width than the beam, for more details, refer to EZ Fence Structure section

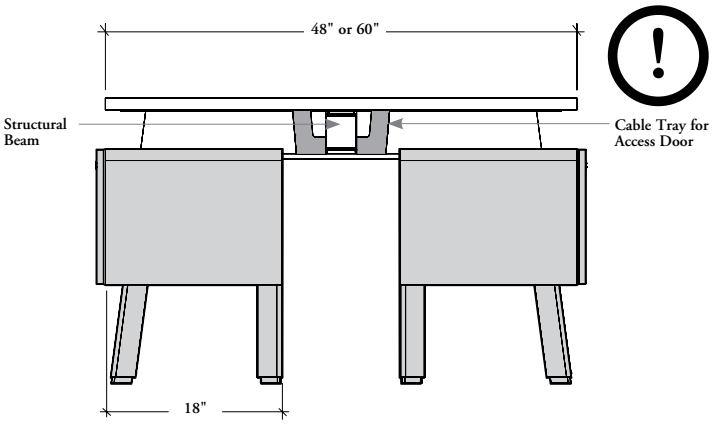

When specified 6" narrower than available clearance, could be placed parallel with 24", 30", 48" and 60" deep workstations but is **not** recommended due to the multiplication of legs and bad fit in widths. Refer to the Beam-Mounted Storage section for better alternatives

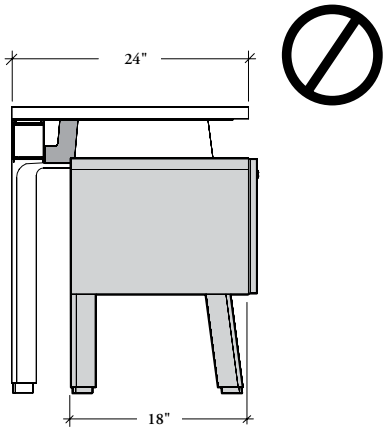

Also interferes with Cable Tray for Access Door when installed under a 24" deep worksurface

planning with freestanding credenzas (continued)

In perpendicular applications, only the open section of credenzas can be positioned directly under worksurfaces

freestanding credenza perpendicular applications

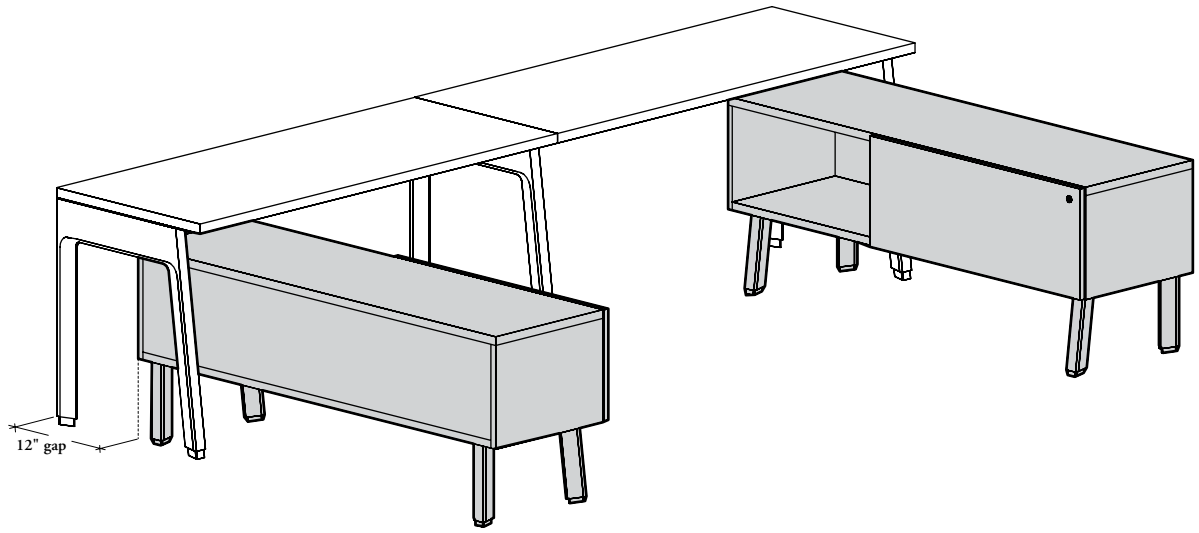

- Can be placed perpendicularly with the workstation. Worksurfaces can never be supported by a Freestanding Credenza
- For single-sided configuration, a minimum 12" gap between rear side of Structural Leg and credenza is required to allow enough clearance with the structural beam and/or Cable Tray for Access Door

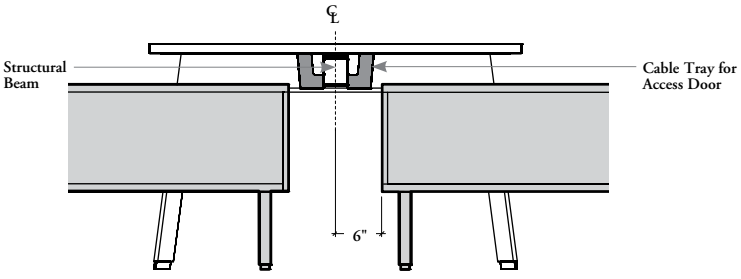

For double-sided configuration, a minimum 6" gap between middle line of structural beam and credenza is required to allow enough clearance with the structural beam and/or Cable Tray for Access Door

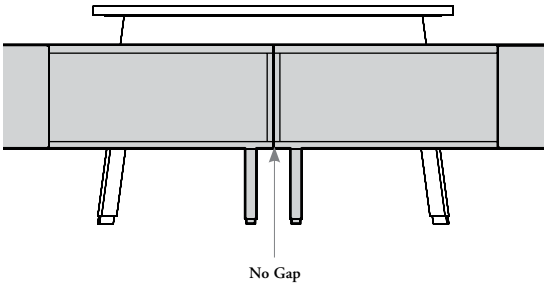

Unstructured returns or run-offs do not need gap between credenzas

integrating accessories (optional) – mobile & freestanding credenza

Can be specified separately, refer to the Accessories section for more details

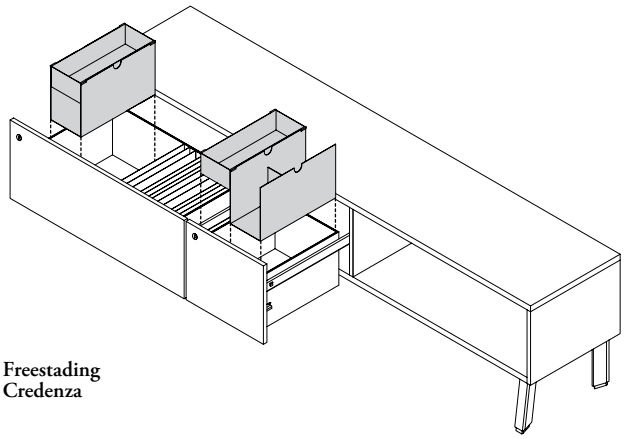

Freestading
Credenza

File Drawer Organizer (JNASO)

- The File Drawer Organizer (letter- or legal-size) can be used in file drawers for additional organization, they add the functionality of Box drawers to File drawers
- Can be used inside all credenza file drawer styles, except for Mobile Credenza
- Can be located anywhere inside a drawer and does not prevent from using the extra space for hanging files

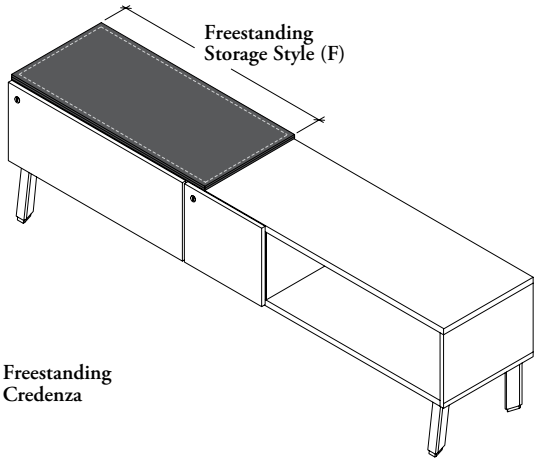

Freestanding
Credenza

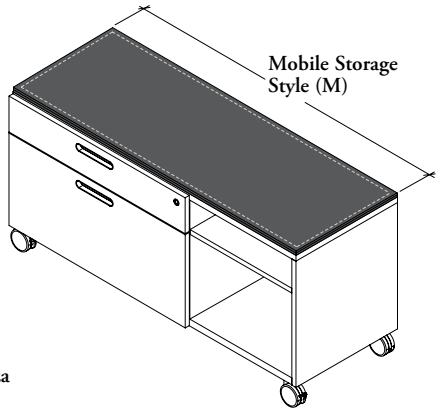

Mobile
Credenza

Seat-Pad – Felt (JNACF) (Shown) or Seat Cushion – Fabric (JNACU)

- Provide casual guest seating when applied to a credenza
- Can be used onto all Credenzas top
- Can be placed anywhere along the top

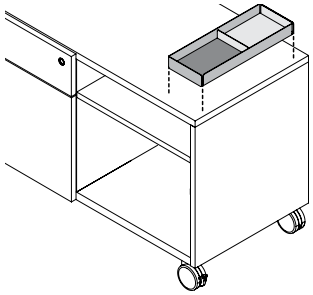

Organizer Only (O)

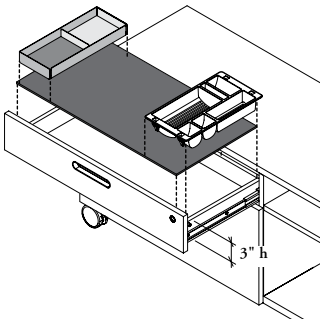

Organizer with Drawer Liner (L)

Box Drawer Organizer (JNAOS)

- Provides personal small items storage space
- Can be used into the small box drawer of the Mobile Credenza
- The Pencil Tray **cannot** be stacked over a Box Drawer Organizer (ordered separately) in a 3" high small box drawer

lock chart – mobile & freestanding credenza

If specified, all closed storage come with a lock and key set and can be keyed alike or randomly. A Key Chart must accompany every order, otherwise orders will be shipped keyed randomly

	number of locks
24" – 36" w 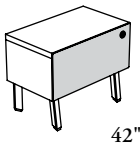	1 x
42" – 72" w 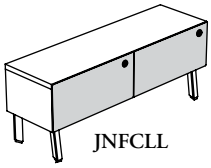 JNFCLL	2 x
Drawer on Left 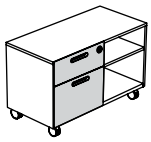 Drawer on Right 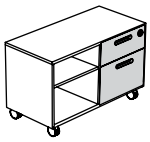 JNFC 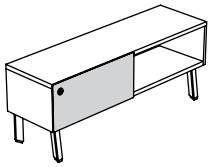 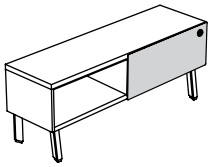 JNFCOL	1 x
Drawers on Left 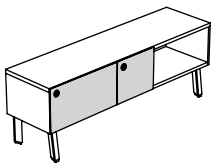 Drawers on Right 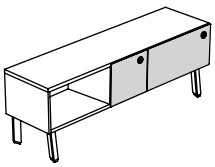 JNFCOC	2 x

Lockable Single Drawer

grain direction – mobile & freestanding credenza

Attention the grain direction is important when planning with storage. The following examples demonstrate this. Laminates do not have one-way grain direction but rather a bi-directional grain pattern.

- Grain/patterns are **not** "centered" on storage unit
- Includes Source or Foundation Laminate (Standard, Finegrain and Straightgrain)
- Drawer front grain direction will always be vertical

mobile credenza – open with drawers

Front

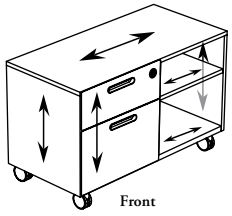

Laminate

Back

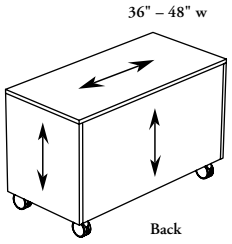

freestanding credenza – lateral file

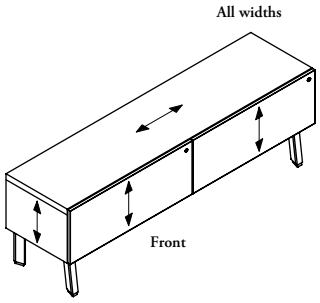

Laminate

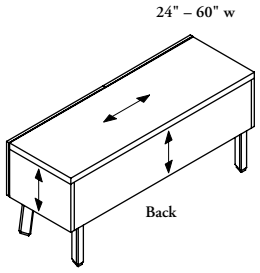

Laminate

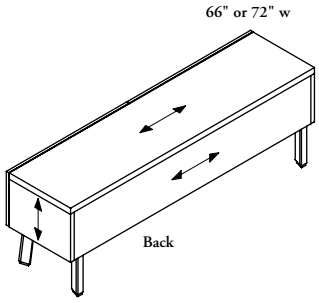

Laminate

grain direction – mobile & freestanding credenza (continued)

freestanding credenza – open or open with lateral file

Front

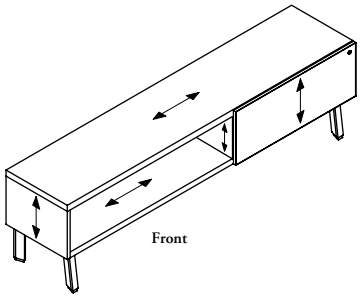

Laminate

Backs

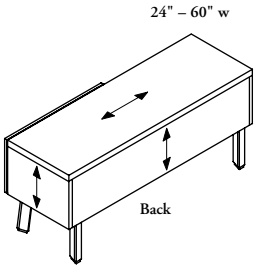

Laminate

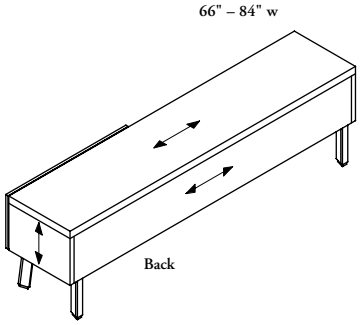

Laminate

freestanding credenza – open with combo file

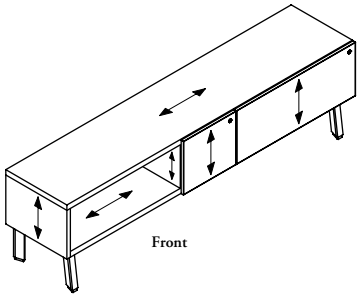

Laminate

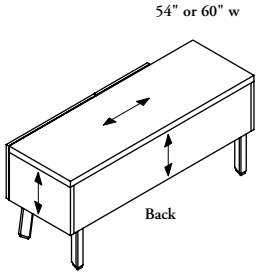

Laminate

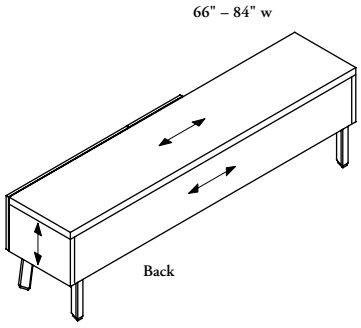

Laminate

Laminate Grains ⟷ = Grain Direction = 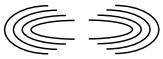

Vertical Grain Direction for colors listed below:

- 3F – 3J – 3K – 3N – 3P – XJ – XK
  Source Laminate
- 2F – 2J – 2K – 2N – 2P – JG – RN
  Foundation Laminate

freestanding storage

freestanding storage

UNDERSTANDING FREESTANDING STORAGE 654

UNDERWORKSURFACE FREESTANDING STORAGE BASICS 655

PLANNING WITH UNDERWORKFACE FREESTANDING STORAGE . . . 658

BEAM TOWER BASICS 661

PLANNING WITH BEAM TOWERS 666

HIGH FREESTANDING STORAGE BASICS 668

FREESTANDING TOWER BASICS 669

PLANNING WITH HIGH FREESTANDING STORAGE & FREESTANDING TOWERS 674

DRAWER WIDTHS – FREESTANDING STORAGE 675

FILING DRAWER CAPACITIES – FREESTANDING STORAGE 676

LOCK CHART – FREESTANDING STORAGE 677

GRAIN DIRECTION – FREESTANDING STORAGE 679

understanding freestanding storage

Expansion Cityline offers a variety of storage formats, from pedestals to beam towers. The following outlines the various storage options available.

Freestanding Storage can be used in a EZ Fence environment, but **cannot** be attached to the structure in any way. Therefore, Beam Towers are **NOT** compatible with EZ Fence Structure.

- Freestanding Storage are available in a variety of heights and configurations. They can be open, semi-open or fully closed. Can be mounted on Single- or Double-Sided Structural Beam (JNDBB or JNDCB) or used as standalone storage solution
- Drawer Fronts can be specified with Solid (T) or Metal (N) with Cityline Recessed pulls or Solid (S) or Metal (M) without pull
- Each Solid Door Front (S) come with a touch-latch for the opening
- Levelers for all Freestanding Storage leveling range of 3"
- Most closed storage products come with an optional lock and key set and can be keyed alike or randomly. Refer to Lock Chart at the end of this section for details

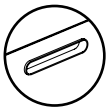

Cityline Recessed (C)

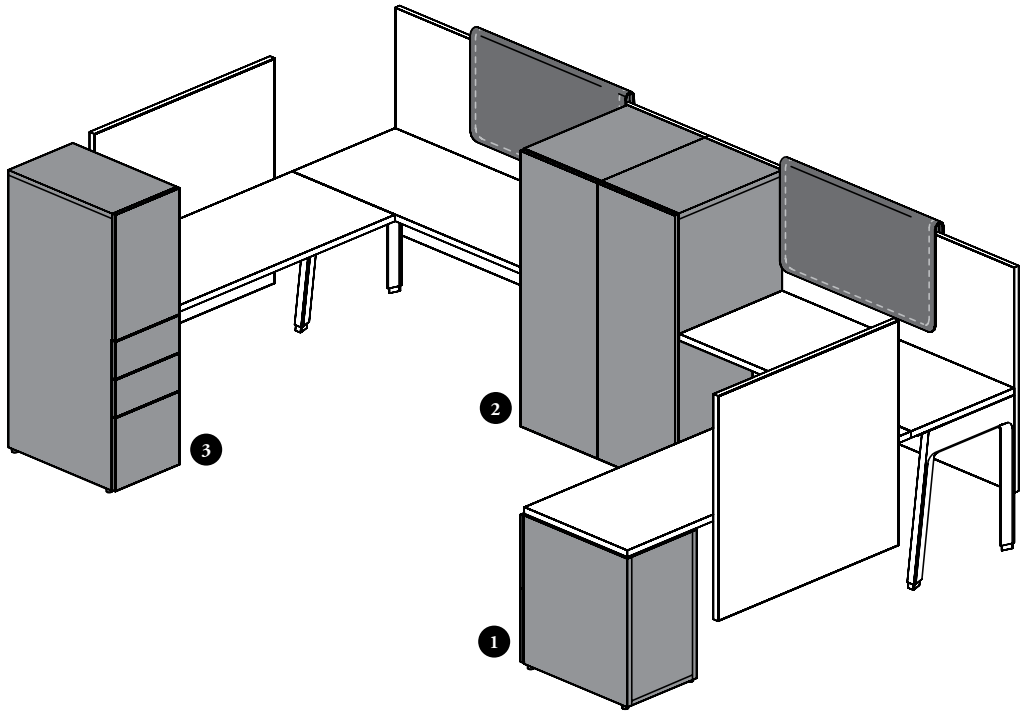

1. **Underworksurface Storage** include pedestals, mobile pedestals, combo pedestals, lateral files, 28" high bookcases

   High Storage includes 29" to 57" high bookcases. The high bookcases are availaible to maximize open storage

2. **Beam Towers** are available in a variety of heights and configurations. They combine closed wardrobes, shelved storage, box and file drawers or open compartments in front or lateral location

3. **Freestanding Towers** are also available in a variety of heights and configurations. They combine closed wardrobes, shelved storage, box and file drawers or open compartments in front or lateral location

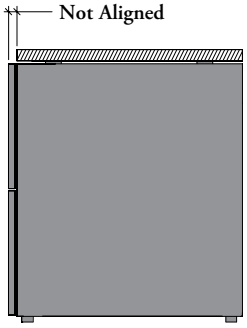

Storage Front vs Edge of Worksurface

Worksurfaces and storage cases of same depth are aligned for aesthetic. Solid, glass and metal fronts are of different thicknesses and protrude from worksurface

Cable Pass-Through Ring

- Provides opening for electrical wiring and communication cables in Beam Tower – End of Station only
- When applicable, two Cable Pass-Through options are available: No Pass-Through (N) or Standard-Height Pass-Through (S)
- Can only be specified with:
  - Beam Tower with Drawers – Lateral Access (JNFBPL)
  - Beam Tower with Drawers and Wardrobe – Front Access (JNFBWF)
  - Beam Tower with Full Solid or Glass Door (JNFBS or JNFBG)
- Metal Cable Pass-Through Covers (JNEGPC) can be specified separately for unused cut outs

underworksurface freestanding storage basics

28" high freestanding storage (Pedestals, Lateral Files or Bookcases) provide additional personal storage under a worksurface. Can be used to support one end of a semi-supported worksurface.

- 28" high storage styles other than bookcases and specified with Attached to Worksurface option must be installed under a worksurface using the Supporting Storage Kit (included with storage) to maintain stability. **Not** applicable with Height-Adjustable Run-Off
- If applicable, Drawer Fronts are available in Metal (M), Metal with Pull (N), Solid (S) or Solid with Pull (T) front style

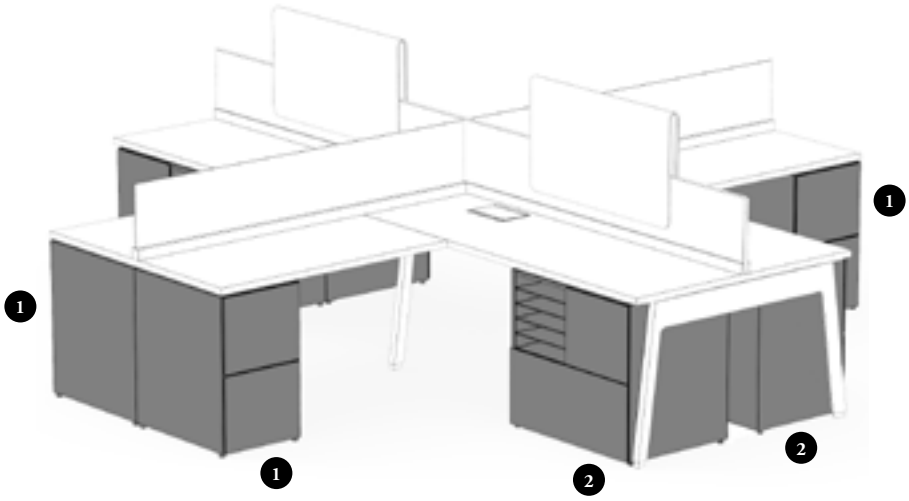

Finishes (applicable with all underworksurface storage)
Case Finish: Source Laminate
Drawer Front Finishes*:
* **Metal Front:** Foundation, Mica and Accent or
* **Laminate Front:** Source Laminate or Foundation Laminate
Pull Finishes (f applicable): Foundation, Mica or Accent
Shelf Finish: Source Laminate
Edge Trim Finishes: Edge Trim Colors

Mobile Pedestal with Seat – Felt (JNFMP)

- Is a small personal storage unit providing temporary casual seating within a workstation
- The Seat Pad offers a recessed fingertip access to allow opening the file drawer
- Available 18" deep by 16" wide and by 21" high
- Two front styles are available: Metal (M) or Solid (S)
- The case comes with lockable casters
- A Drawer Module (JNAMD) or an Utility Box (JNAUB) can be installed on the shelf over the drawer. Refer to the Accessories section for details

Seat Finish: Loft
Stitches Finish for Seat: Carbon Coordinate (C), Shale Coordinate (E), Carrara Coordinate (G) or Umber Coordinate (M)

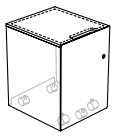

File

Mobile Pedestal (JNFPM)

- Is a small personal storage unit
- Available 18" deep by 16" wide and by 23" high
- Two front styles with Cityline Recessed pulls are available: Metal with Pull (N) or Solid with Pull (T)
- The case comes with **not** lockable casters
- Seat Pad – Felt (JNACF) or Seat Cushion – Fabric (JNACU) can be added on top

Pull Finishes: Foundation, Mica or Accent

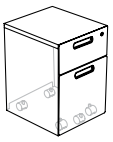

Box/File (B)

- The Pencil Tray can be stacked over a Box Drawer Organizer or Utility Box (ordered separately) in a 4" high box drawer

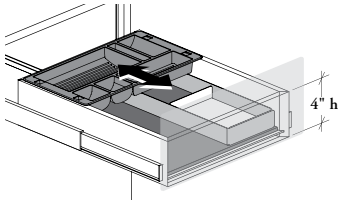

underworksurface freestanding storage basics (continued)

Pedestals (JNFPS)

- A variety of configurations providing storage below the worksurface. It can be used Freestanding (F) or Attached to Worksurface (A)
- 16" wide, 28" high and in depths of 18", 24" or 30"
- Four configurations are available: box/box/file, file/file, open/file or shelves/file drawer combinations
- Four front styles are available: Metal (M) or Solid (S) (no pull) and Metal with Pull (N) or Solid with Pull (T) (with Cityline Recessed pulls)
- A Drawer Module (JNAMD) can be installed and centered in the upper open compartment of Open/File Configuration (O) only. Refer to the Accessories section for details

Metal Shelves Finishes (if applicable): Foundation, Mica and Accent

1

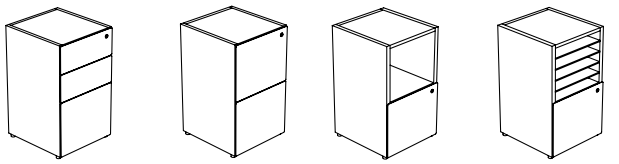

Box/Box/File (B) **File/File (F)** **Open/File (O)** **Shelves/File (S)**

Combo Pedestal (JNFCP)

- Provides storage and filing below the worksurface. It can be used Freestanding (F) or Attached to Worksurface (A)
- 30" wide, 28" high and in depths of 18" or 24"
- Two configurations are available: open/file or shelves/file
- Four front styles are available: Metal (M) or Solid (S) (no pull) and Metal with Pull (N) or Solid with Pull (T) (with Cityline Recessed pulls)
- Handedness must be specified left or right and is determined by the location of the 15" upper file drawer

Shelves Finishes (if applicable): Foundation, Mica and Accent

2

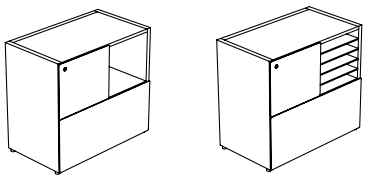

Open/File (O) **Shelves/File (S)**

Lateral File (JNFLF)

- Provides high density filing and organized storage. It can be used Freestanding (F) or Attached to Worksurface (A)
- Available 28" high, in widths of 24", 30" or 36" and in depths of 18"or 24"
- Comes with two file drawers
- Four front styles are available: Metal (M) or Solid (S) (no pull) and Metal with Pull (N) or Solid with Pull (T) (with Cityline Recessed pulls)
- Can be specified with or without lock

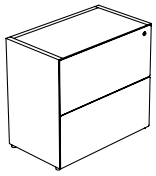

underworksurface freestanding storage basics (continued)

Bookcase with Metal Dividers (JNFBM)

- Provides high density open storage under or beside a workstation
- Available 28" or 29" high, in widths of 15", 24", 30", 36", 42" or 48" and in depths of 15" or 18"
- Can store two rows of standard letter-size binders
- The number of open compartments varies with width
- The 29" height **cannot** be used under a worksurface and has a finished top. Refer to the following page for details

Shelf & Divider Finishes: Foundation, Mica and Accent

15" w / 28" h

Two Open Compartments

24", 30" or 36" w / 28" h

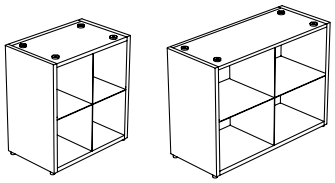

Four Open Compartments

42" or 48" w / 28" h

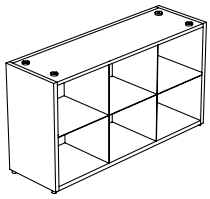

Six Open Compartments

Bookcase (JNFBL)

- Provides open storage under or beside a workstation
- Available 28", 29", 42", 51" and 57" high, in widths of 18", 24", 30" or 36" and in depths of 15" or 18"
- The 28" high bookcase comes with one adjustable shelf
- Holes at 1 1/4" intervals on the inside walls of side panels allow for shelf adjustment
- Two rows of standard letter-size binders will **not** fit in the 28" high Bookcase
- The shelves and case construction are 1" thick
- The 29" to 57" heights **cannot** be used under a worksurface and have a finished top. Refer to the following page for details

28" h

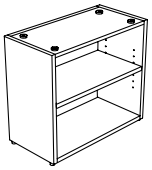

One Adjustable Shelf

planning with underworksurface freestanding storage

The following should be considered when planning with Expansion Cityline Mobile Pedestals

- It is always used independently from the desk structure
- Only Mobile Pedestal or Mobile Pedestal with Seat comes with the same cut-out clearance to back and bottom of the storage. The legs will tuck under the back of the storage
- The applications illustrated below are available with T- or C-Legs

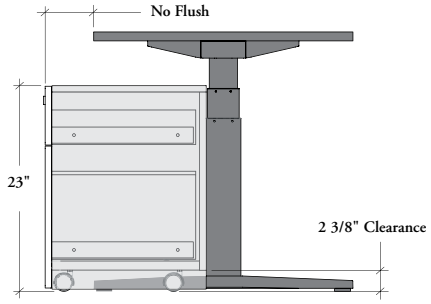

- The **Mobile Pedestal** can be stored underneath any Restricted (9M) Navigate tables

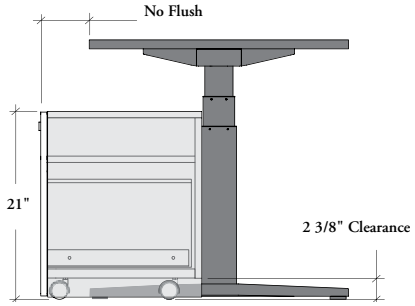

- The **Mobile Pedestal with Seat** can be stored underneath any Restricted (9M) Navigate tables or Riser (9U) hiSpace tables

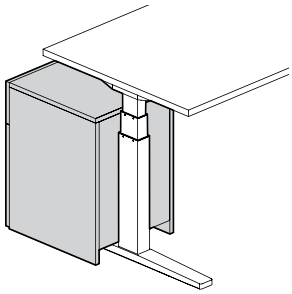

- The Mobile Pedestals exceed the Height-Adjustable Table footprint when they are stowed against the base mechanism

Extended Electric Base Mechanism (9E)

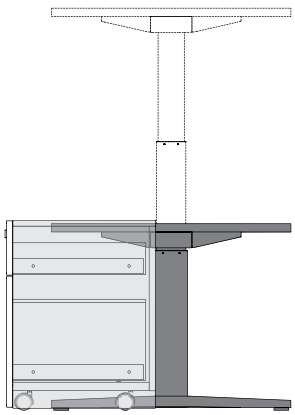

Cityline Restricted Electric Base Mechanism (9M)

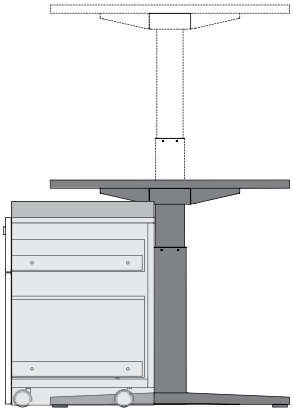

- It is recommended to specify a Cityline Restricted Electric Base Mechanism (9M) to avoid collision with Mobile Pedestals
- Clearances when the Restricted Base Mechanism is at its lowest position are 3 1/4" for the Mobile Pedestal with Seat – Felt (21") and 1 1/4" for the Mobile Pedestal (23")
- The addition of a Seat Pad – Felt on a Mobile Pedestal reduces this clearance by 5/8" and the Seat Cushion – Fabric reduces the clearance by 1 1/2"

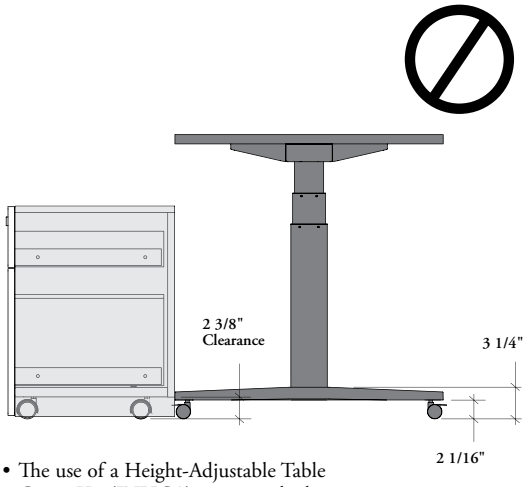

- The use of a Height-Adjustable Table Caster Kit (JNHCA) prevents the leg to tuck under the Mobile Pedestals

planning with underworksurface freestanding storage (continued)

The following should be considered when planning with Expansion Cityline underworksurface freestanding storage.

- 28" high storage (except 18" deep) specified with the Attached to Worksurface option can be used to support one end of an unstructured worksurface of the same depth
- When 28" high, 15" deep bookcases fit beneath a 18" deep beam-mounted worksurface, 18" deep storage can be used under 24" and 30" deep beam-mounted worksurfaces, and 24" deep storage can be used under 24" and 30" deep beam-mounted worksurfaces
- 24" or 30" deep drawer storage and all 29" high bookcases can be specified and used freestanding
- When installed under a worksurface and specified Attached to Worksurface, a Supporting Storage Kit is included to maintain stability

Supporting Storage Kit (JNFKS)

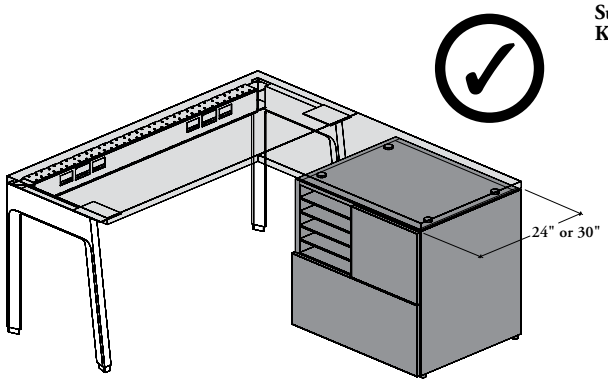

24" or 30" deep storage are used to support one end of an unstructured worksurface. It can replace a Freestanding Leg

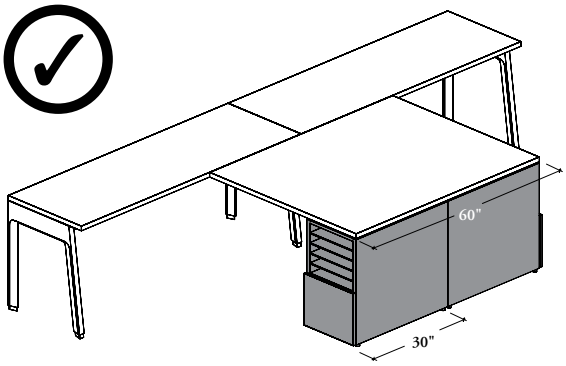

Two storage can be installed back-to-back under a double-sided unstructured worksurface

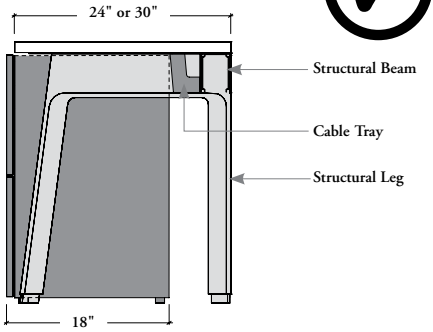

- 18" deep storage **cannot** be specified freestanding, it must always be placed under a worksurface (Attached to Worksurface option must be specified)
- 18" deep storage will allow the use of a Cable Tray for Access Door when used under 24" or 30" deep beam-mounted worksurfaces

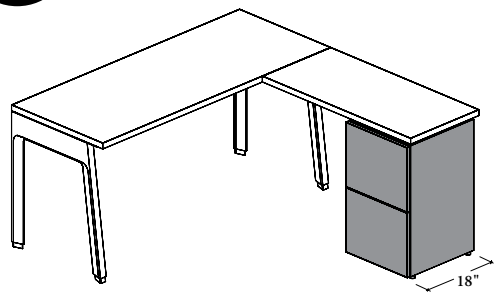

18" deep storage **cannot** support 18" deep unstructured worksurfaces

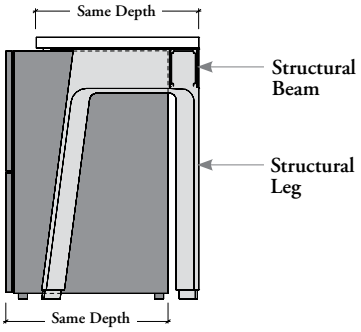

A storage of the same depth than the worksurface **cannot** be used along with a structural beam

planning with underworksurface freestanding storage (continued)

The Lateral Linking Plates are used to support a worksurface that is mounted next to a storage specified with the attached to worksurface option. The Lateral Linking Plates can be specified separately

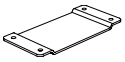

Lateral Linking Plates (JNFKL)

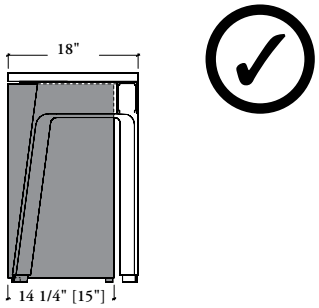

15" deep Bookcases (JNFBM or JNFBL) are designed to fit under a beam-mounted 18" deep worksurface as its depth is reduced at 14 1/4" for that purpose

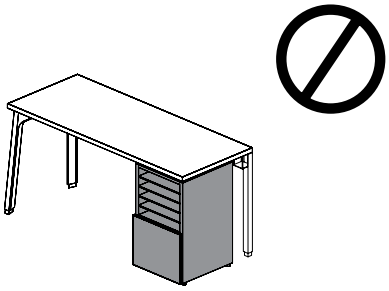

Any underworksurface storage **cannot** be used in conjunction with a Structural Post – End Position to support the end of a beam-mounted worksurface run

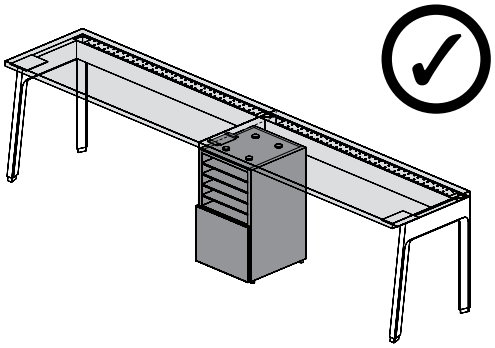

The front of the worksurface on right is supported by a storage with the Attached to Worksurface option. The front of the worksurface on left is supported by a Lateral Linking Plates kit. Structural beams and posts with storage bracket are required to support the back portion of worksurfaces

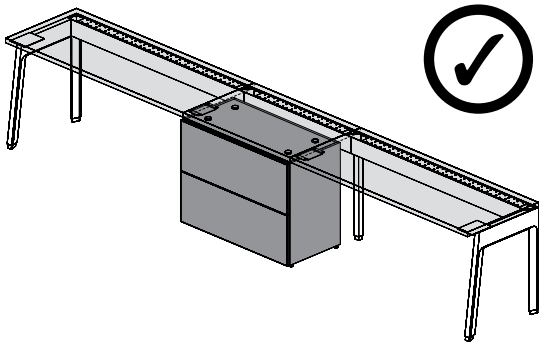

The front of the worksurface on center is wholly supported by a storage with the Attached to Worksurface option. The front of the worksurfaces on right and on left are each supported by a Lateral Linking Plates kit. Two Lateral Linking Plates Kits must be specified for this application. Structural beams and posts with storage bracket are required to support the back portion of worksurfaces

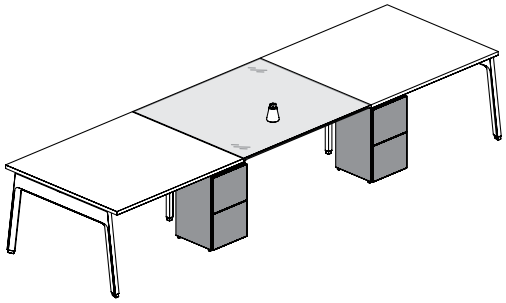

The front of the worksurface on right and left is supported by a storage with the Attached to Worksurface option. The front of the Writable Glass Worksurface on center is supported by a Lateral Linking Plates Kit. Structural beams and posts with storage bracket are required to support the middle portion of Writable Glass Worksurface

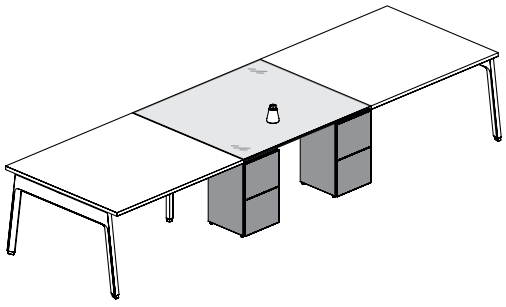

Underworksurface storage **cannot** be used to support Writable Glass Worksurface

beam tower basics

The following outlines the features of Expansion Cityline Beam Towers – Lateral Access.

- All beam towers are offered to match with Teknion standard datum heights of 42", 51" or 57"
- **Cannot** be used as standalone storage. They must always be used in conjunction with Single- or Double-Sided Structural Beams (JNDBB) or Chicago Structural Beams (JNDCB), structural posts with storage brackets and worksurfaces. For more details, refer to the Desk Structures section
- **Cannot** be used with EZ Fence Structure
- Can be used End of Station (E) or In-Line (I) when mounted along a structural beam. For more details, refer to the Desk Structures section
- Hang-On Kit (JNFKH) is included to allow the Beam Tower to support one end of a worksurface. The number of kit varies, see individual product page for details

lateral access beam towers

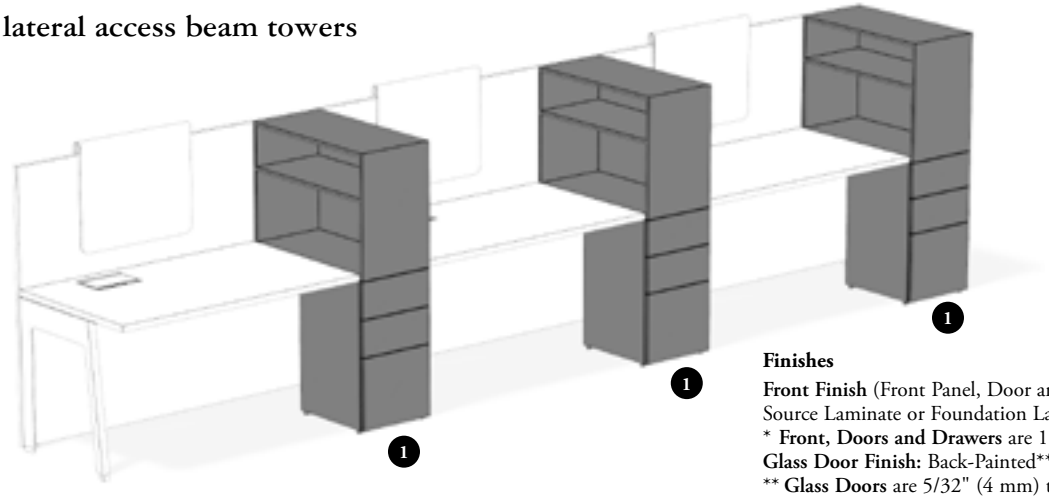

Finishes

Front Finish (Front Panel, Door and Drawer Fronts*)**:** Source Laminate or Foundation Laminate (if applicable)
* **Front, Doors and Drawers** are 11/16" thick
Glass Door Finish: Back-Painted**
** **Glass Doors** are 5/32" (4 mm) tempered glass
Door Frame Finishes: Foundation, Mica and Accent
Case Finish: Source Laminate
Pull Finishes (if applicable): Foudation, Mica or Accent
Edge Trim Finishes: Edge Trim Colors
Cable Pass-Through Ring Finish: Platinum Coordinate
Adjustable Shelves* **Finish:** Source Laminate
*** Shelves are 11/16" thick
Coat Hooks Finish: Platinum Coordinate

Beam Tower with Drawers – Lateral Access (JNFBPL)

- Provides various storage possibilities while supporting one end of a worksurface and letting a beam pass through
- Contains front facing box/box/file or file/file drawers and sideways open shelved compartment
- Available in heights of 42", 51" or 57", depths of 24" or 30" and width of 15"
- Open shelved compartment has a solid back, therefore the units are handed, which is determined by the side on which the open compartment must be installed from the user perspective
- Only 51" high towers include an adjustable shelf. Holes at 1 1/4" intervals on the inside walls of side panels of the top section allow for shelf adjustment
- When End of Station (E) is specified, it can be specified with or without Cable Pass-Through Ring to allow routing power and data cables
- Two front styles are available: Solid (S) (no pull) or Solid with Pull (T) (Cityline Recessed pulls on drawer fronts only)

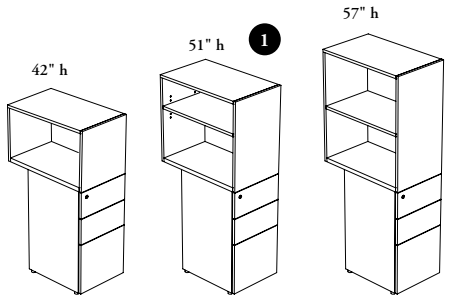

Box/Box/File (B)

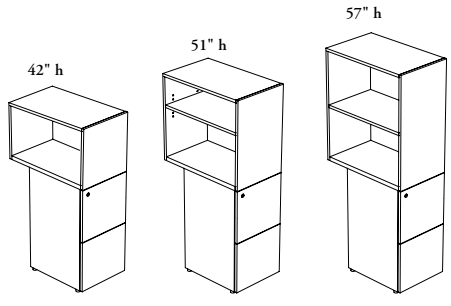

File/File (F)

beam tower basics (continued)

The following outlines the features of Expansion Cityline Beam Towers – Front Access.

front access beam towers

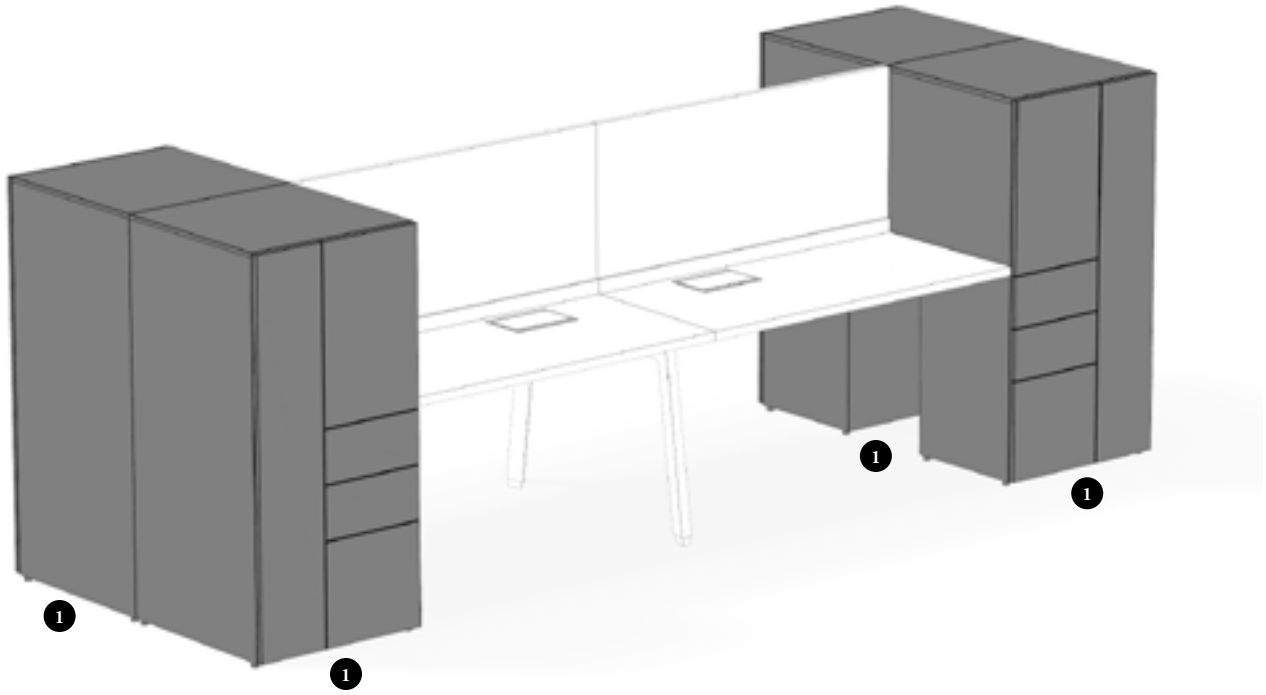

Beam Tower with Drawers and Wardrobe – Front Access (JNFBWF)

- Provides coat storage, drawers and closed section while supporting one end of a worksurface and letting a beam pass through
- Contains front facing box/box/file or file/file drawer with closed cabinet and wardrobe sections
- Available in heights of 42", 51" or 57", widths of 24" or 30" and depths of 24" or 30"
- Towers are handed, which is determined by the location of the wardrobe (full door) which also corresponds to tower position when in end of station
- 51" & 57" high towers include adjustable shelves. Holes at 1 1/4" intervals on the inside panels allow for shelf adjustment
- When End of Station (E) is specified, it can be specified with or without Cable Pass-Through Ring to allow routing power and data cables
- Two front styles are available: Solid (S) (no pull) or Solid with Pull (T) (with Cityline Recessed pulls on drawer fronts only)

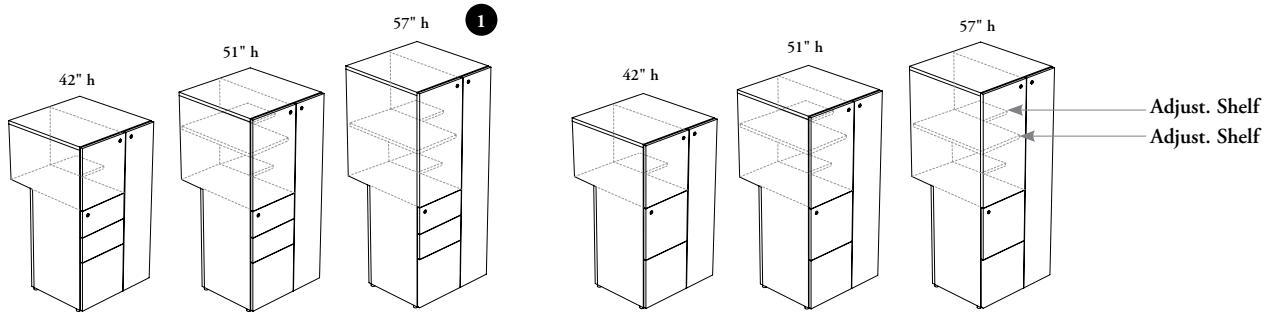

beam tower basics (continued)

The following outlines the features of Expansion Cityline Beam Tower – Full Door.

Beam Tower with Two Doors can only be used In-Line (I) with worksurfaces on both sides

full door beam towers

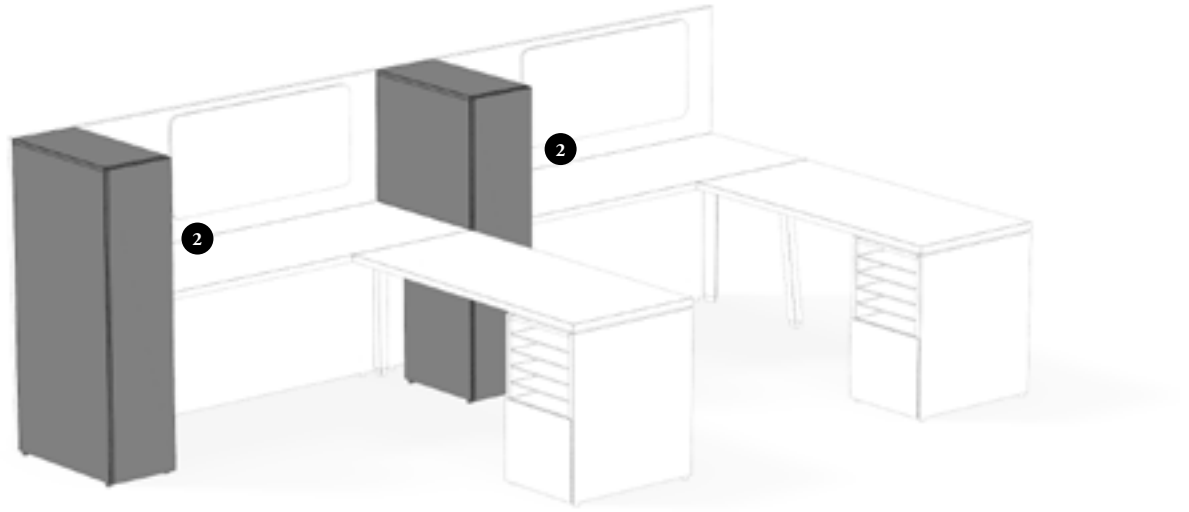

Beam Tower with Full Solid Door (JNFBS) or Beam Tower with Full Glass Door (JNFBG)

- Provide Wardrobe (W) or Shelf (S) storage accessible from the front
- Available in heights of 42", 51" or 57", depths of 24" or 30" and widths of 12" or 18"
- When specified, the towers come with adjustable shelves. Holes at 1 1/4" intervals on the inside walls of side panels allow for shelf adjustment
- Towers must be specified left or right, handedness being determined by the door swing direction which also corresponds to tower position when in end of station
- When End of Station (E) is specified, it can be specified with or without Cable Pass-Through Ring to allow routing power and data cables

Solid Front Door (S)

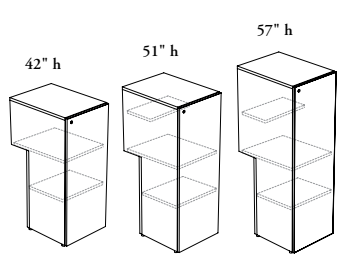

Shelves (S)

One Adjustable Shelf

Two Adjustable Shelves

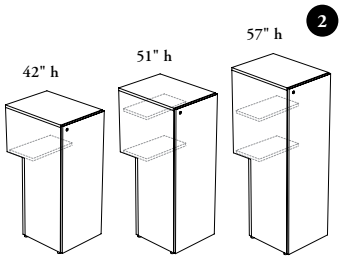

Wardrobe (W)

No Adjustable Shelf

One Adjustable Shelf

Glass Door

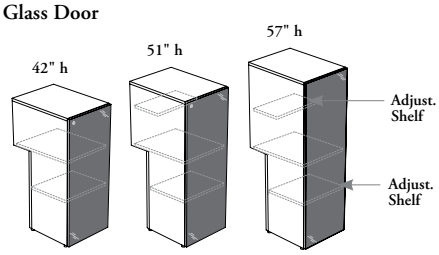

Shelves (S)

One Adjustable Shelf

Two Adjustable Shelves

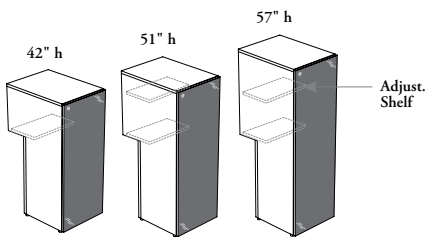

Wardrobe (W)

No Adjustable Shelf

One Adjustable Shelf

beam tower basics (continued)

The following outlines the features of Expansion Cityline Dual Beam Tower with Full Doors.

Can only be used In-Line (I) with worksurfaces on both sides

dual beam towers with full doors

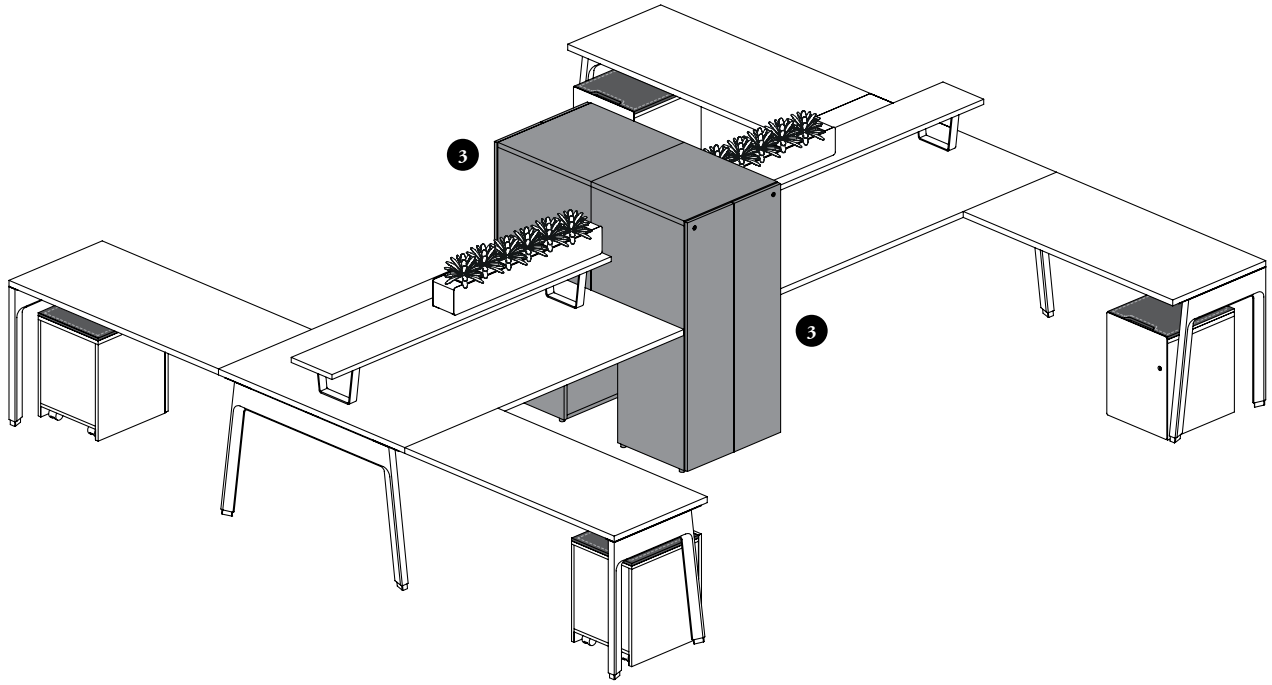

Dual Beam Tower with Full Solid Doors (JNFBDS)

- Provides two sections for coat storage
- Available in heights of 42", 51"or 57", depths of 24" or 30" and widths of 18" or 24"
- Both doors swing from the center divider providing specific opening for each user. Each door has one lock when specified
- 51"or 57" high towers come with a small adjustable shelf in each section. Holes at 1 1/4" intervals on the inside walls of side panels allow for shelf adjustment

Solid Door Fronts (S)

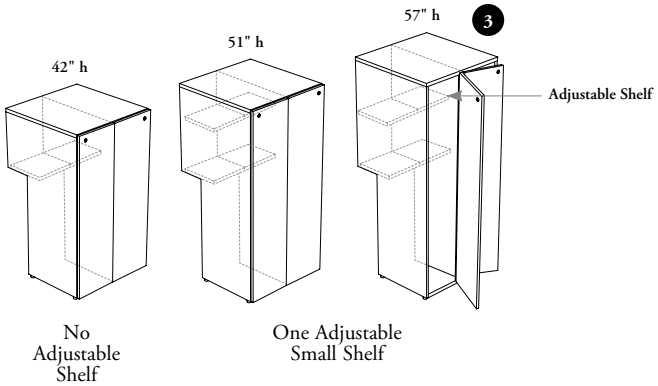

beam tower basics (continued)

The following illustrates Expansion Cityline beam towers door & drawer nominal widths.

beam towers – door & drawer widths

Beam Tower with Drawers – Lateral Access (JNFBPL)

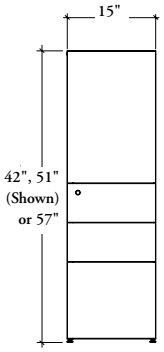

- The 15" wide beam towers are complete with 15" wide pedestal and have one fixed front panel

Beam Tower with Drawers and Wardrobe – Front Access (JNFBWF)

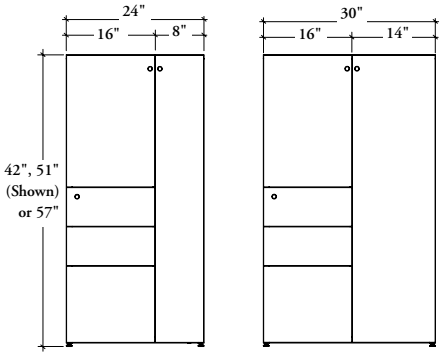

- The 24" or 30" wide half wardrobe units are complete with 16" wide pedestal and have one door on the secured storage section
- The 24" wide cabinet has a 8" wide wardrobe and the 30" wide cabinet has a 14" wide wardrobe

planning with beam towers

The following should be considered when planning with Expansion Cityline Beam Towers.

- Must be used in conjunction with worksurfaces, Single- or Double-Sided Beams and Posts with Storage Bracket. For more details, refer to the Desk Structures section
- Can be used in End of Station (E) or In-Line (I) when mounted along a structural beam. For more details, refer to the Desk Structures section
- Hang-On Kit (JNFKH) is included to allow the Beam Tower to support one end of a worksurface. The number of kit varies, see individual product page for details

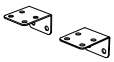

Hang-On Kit (JNFKH)

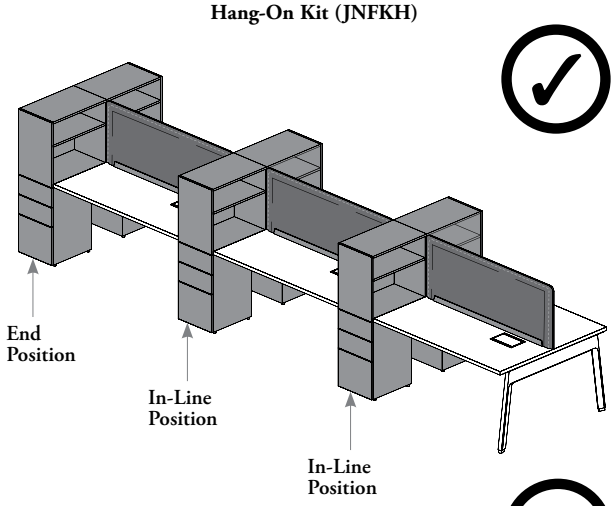

- End Position must always be used on ends of workstation. The Beam Tower – End Position must be used with one worksurface, one Structural Beam and one End Structural Post – Storage (JNDPUE)
- A Beam Tower must be specified the same depth than the worksurface to which it is attached
- On double-sided workstation (Shown), two beam towers must be mounted back-to-back, and must be of the same depth
- The lower back portion of the tower is recessed to let the beam pass through but the external side panel covers the beam and post for aesthetic
- The lower back portion of the whole tower is recessed to let the beam pass through

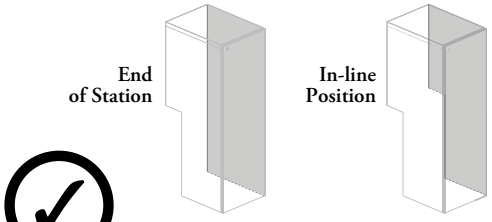

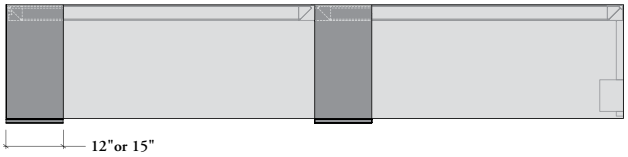

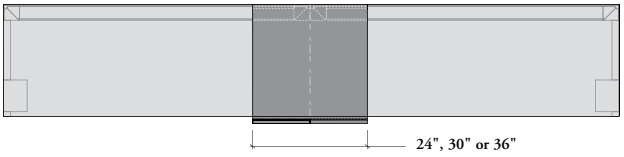

- 12" or 15" wide beam towers can be justified in the footprint of each station
- **Cannot** be shared between two users

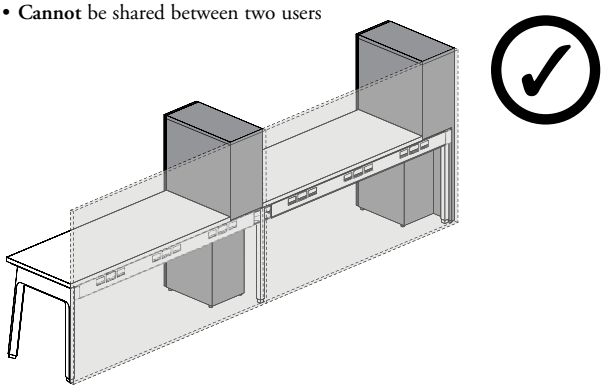

When used in a single-sided workstation, the back of a Beam Tower must not be exposed. It should be:

– Placed against a wall
– Covered by a Beam-Mounted Elevated or Floor Screen. Restrictions apply. Refer to the Workstation Screens section for details

24", 30", or 36" wide in-line beam towers can be placed between two worksurfaces to provide a storage for two users

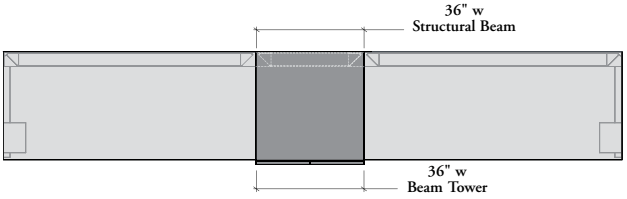

On the workstation above, both worksurfaces and tower are mounted on-module with respective beam and post. It is also possible to position a single post justified to either side of the tower or to its center. In these conditions, worksurfaces width must be adapted accordingly

planning with beam towers (continued)

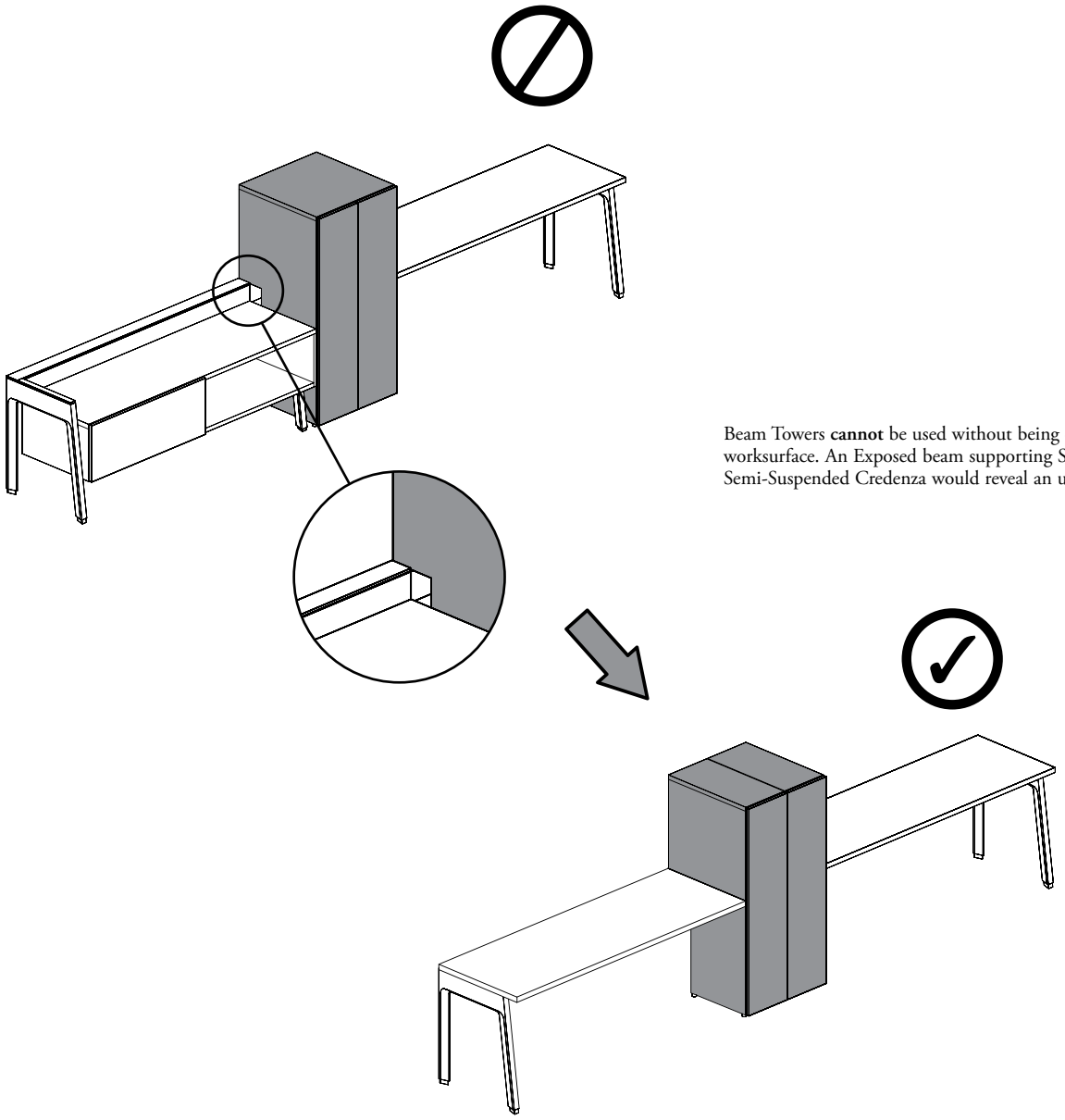

Beam Towers **cannot** be used without being connected with a worksurface. An Exposed beam supporting Suspended or Semi-Suspended Credenza would reveal an unaesthetic gap

high freestanding storage basics

High freestanding storage (Bookcase or Bookcase with Metal Dividers) provide additional storage that can be installed anywhere in the surrounding of a workstation. Can be used to support one end of a worksurface or standalone.

Open storage higher than 28" can be used to support one end of a worksurface of the same dimension, using the Hang-On Kit (JNFKH) (**not** included with storage) to maintain stability

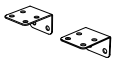

Hang-On Kit (JNFKH)

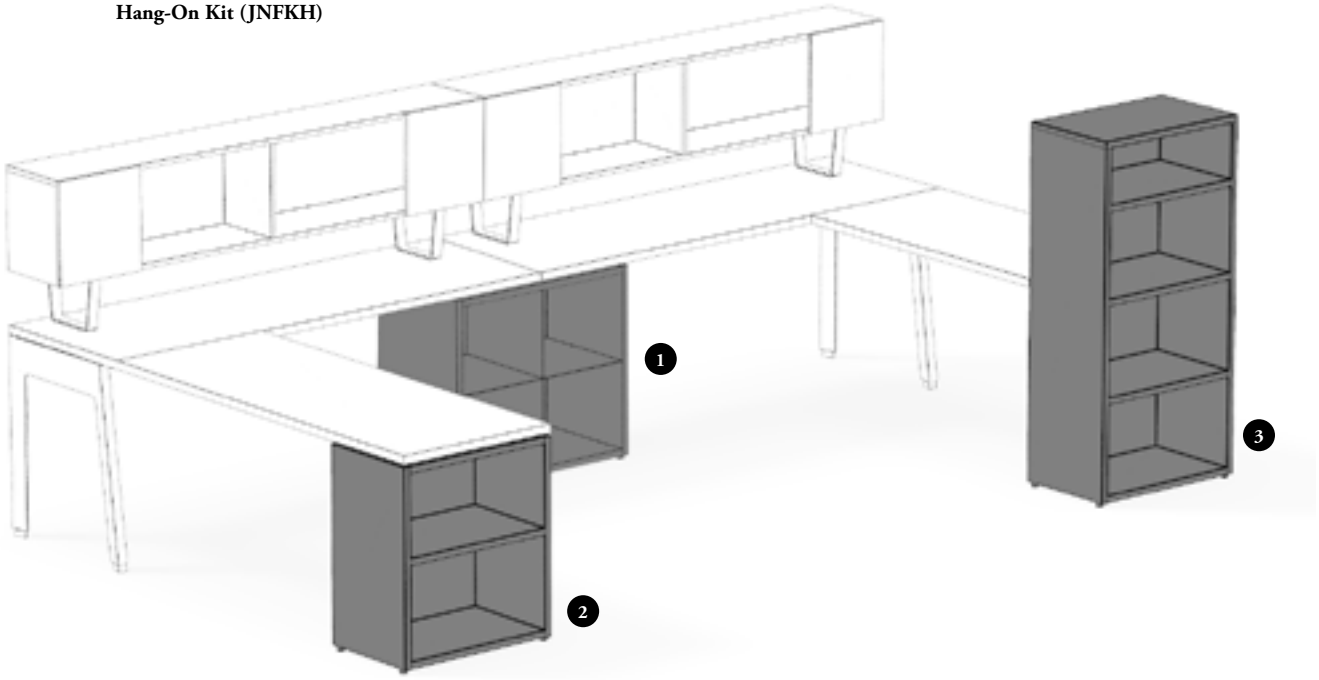

Bookcase with Metal Dividers (JNFBM) (continued)

- Refer to page 657 for offering and description
- Top on 29" height overlaps side and back panels for a cleaner look
- The number of open compartments varies by width

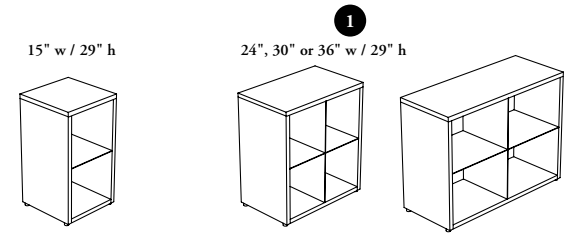

Two Open Compartments

Four Open Compartments

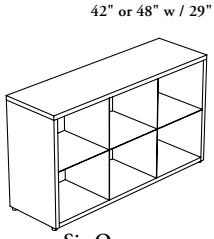

Six Open Compartments

Bookcase (JNFBL) (continued)

- Refer to page 657 for offering and description
- Top on 29" to 57" heights overlaps side and back panels for a cleaner look
- Allow multiple rows of standard letter-size binders
- The illustrations below show the number of shelves for each height

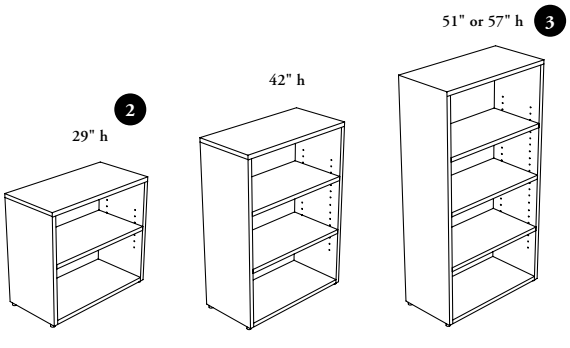

One Adjustable Shelf

Two Adjustable Shelves

Three Adjustable Shelves

freestanding tower basics

The following outlines the features of Expansion Cityline Freestanding Tower – Lateral Access.

- All freestanding towers are offered to match with Teknion standard datum heights of 42", 51" or 57"
- Must be used to support one end of a worksurface
- Hang-On Kit (JNFKH) must be specified separately to allow the Lateral Access Tower to support one end of a worksurface

lateral access towers

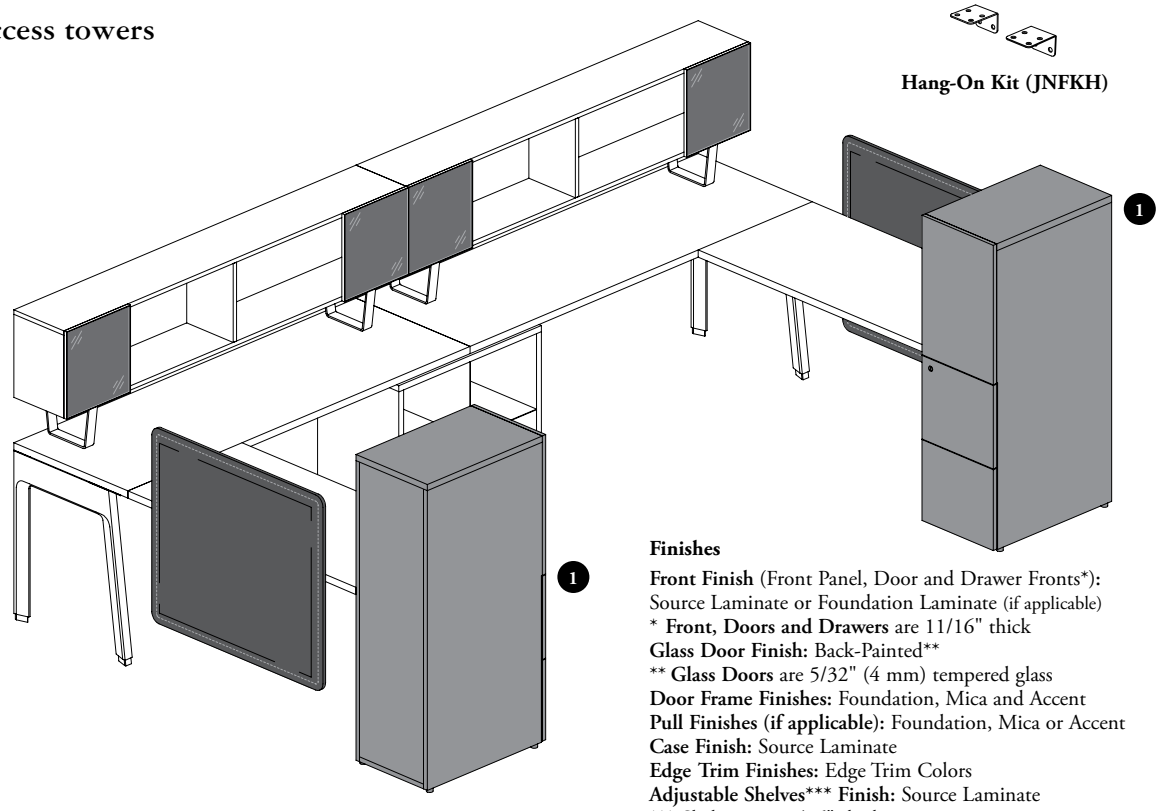

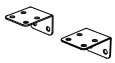

Hang-On Kit (JNFKH)

Finishes

Front Finish (Front Panel, Door and Drawer Fronts*)**:**
Source Laminate or Foundation Laminate (if applicable)
* **Front, Doors and Drawers** are 11/16" thick
Glass Door Finish: Back-Painted**
** **Glass Doors** are 5/32" (4 mm) tempered glass
Door Frame Finishes: Foundation, Mica and Accent
Pull Finishes (if applicable): Foundation, Mica or Accent
Case Finish: Source Laminate
Edge Trim Finishes: Edge Trim Colors
Adjustable Shelves* **Finish:** Source Laminate
*** Shelves are 11/16" thick
Coat Hooks Finish: Platinum Coordinate

Freestanding Tower with Drawers – Lateral Access (JNFTPL)

- Provides various storage possibilities while supporting one end of a worksurface
- Contains front facing box/box/file or file/file drawers and sideways open shelved compartment
- Available in heights of 42", 51"or 57", depths of 18", 24" or 30" and width of 15"
- Open shelved compartment has a solid back, therefore the units are handed, which is determined by the side on which the open compartment must be installed from the user perspective
- Only 51" high towers include an adjustable shelf. Holes at 1 1/4" intervals on the inside walls of side panels of the top section allow for shelf adjustment
- Two front styles are available: Solid (S) (no pull) or Solid with Pull (T) (with Cityline Recessed pulls on drawer fronts only)

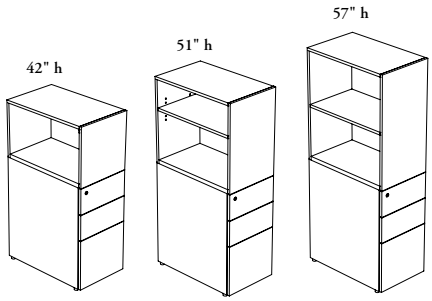

Box/Box/File (B)

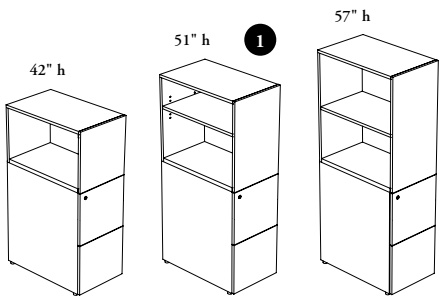

File/File (F)

freestanding tower basics (continued)

The following outlines the features of Expansion Cityline Freestanding Tower – Front Access.

front access freestanding towers

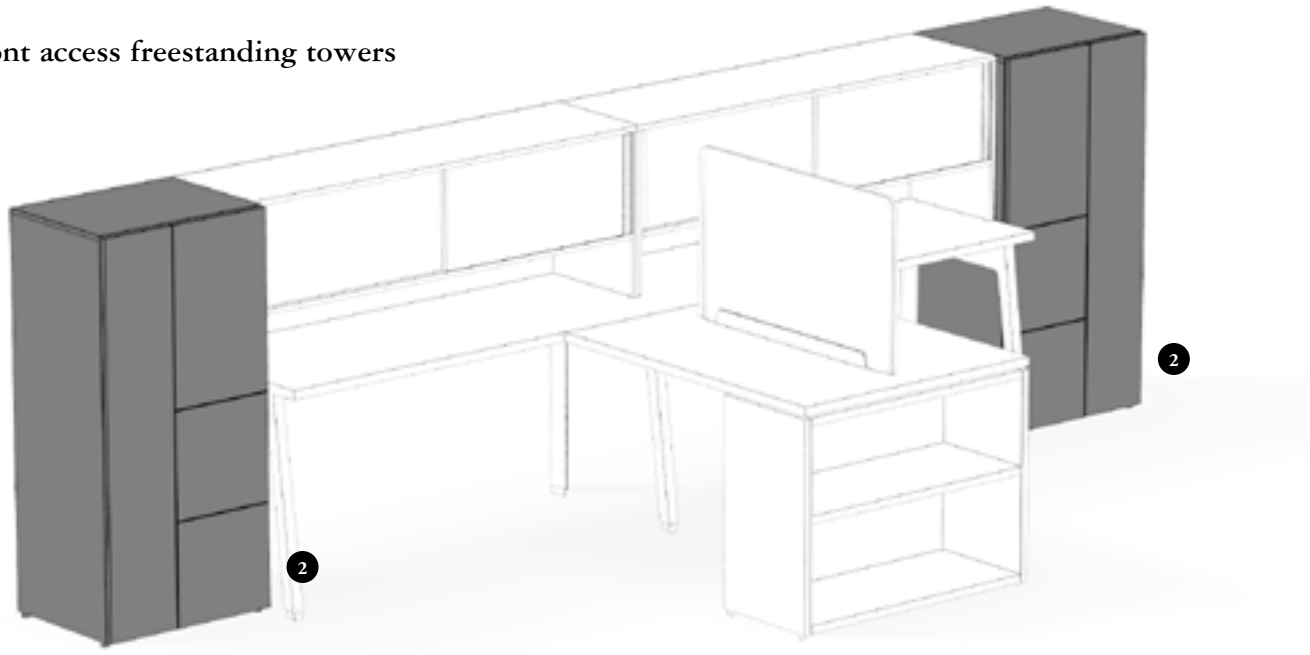

Freestanding Tower with Drawers and Wardrobe – Front Access (JNFTWF)

- Provides coat storage, drawers and closed or open section. Can also support one end of a worksurface of the same dimension
- Contains front facing box/box/file or file/file drawer, closed or open cabinet and wardrobe sections
- Available in heights of 42", 51" or 57", widths of 24" or 30" and depths of 18", 24" or 30"
- Towers are handed, which is determined by the location of the wardrobe (full door)
- 51" & 57" high towers include adjustable shelves. Holes at 1 1/4" intervals on the inside panels allow for shelf adjustment
- Two front styles are available: Solid (S) (no pull) or Solid with Pull (T) (with Cityline Recessed pulls on drawer fronts only)

Door (D)

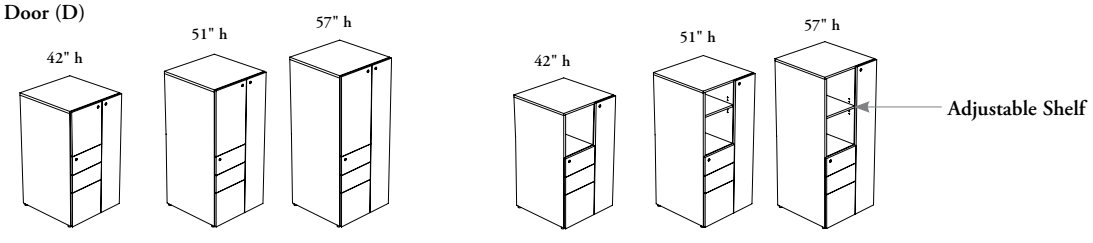

Box/Box/File (B)

Open (O)

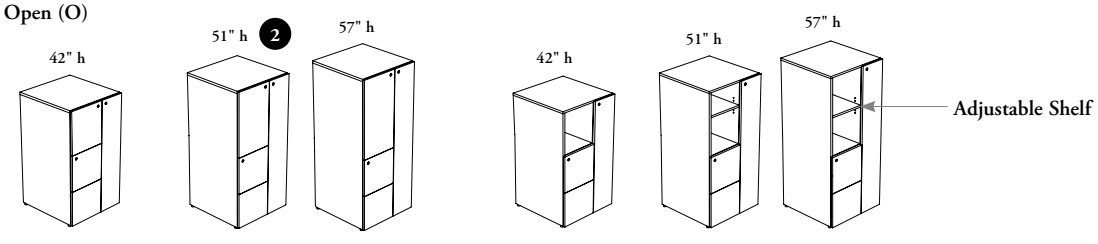

File/File (F)

freestanding tower basics (continued)

The following outlines the features of Expansion Cityline Freestanding Tower – Full Door.

full door or two full doors freestanding towers

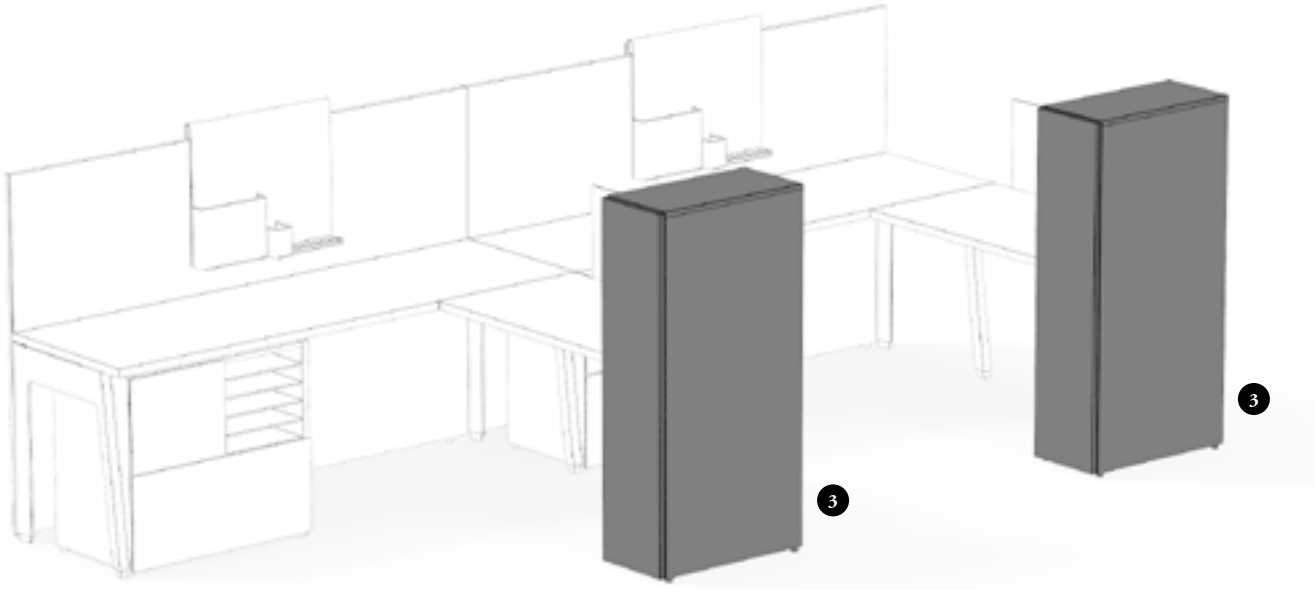

Freestanding Tower with Full Solid Door (JNFTS) or Freestanding Tower with Full Glass Door (JNFTG)

- Provide Wardrobe (W) or Shelf (S) storage accessible from the front
- Available in heights of 42", 51"or 57", depths of 15", 18", 24" or 30" and widths of 12"
- When specify, the towers come with adjustable shelves. Holes at 1 1/4" intervals on the inside walls of side panels allow for shelf adjustment
- 12" wide towers are barely stable. The mounting of a markerboard on the side of a tower requires to attach it to a worksurface with a Hang-On Kit (JNFKH) (**not** included) to maintain stability
- Tower must be specified left or right, handedness being determined by the door swing direction

Solid Door Front (S)

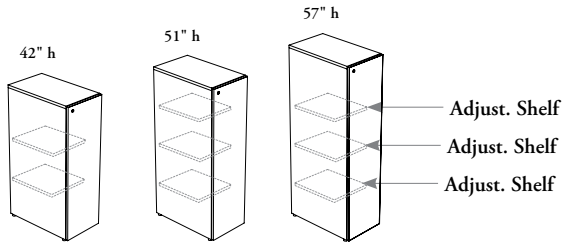

Shelves (S)

Two Adjustable Shelves

Three Adjustable Shelves

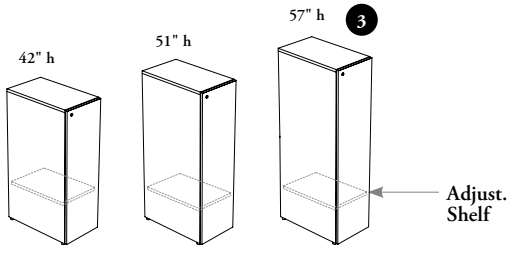

Wardrobe (W)

One Adjustable Shelf

Glass Door

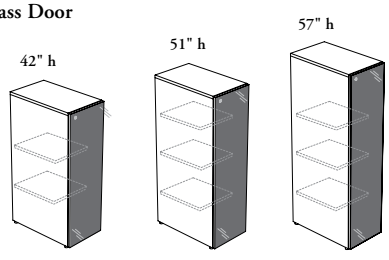

Shelves (S)

Two Adjustable Shelves

Three Adjustable Shelves

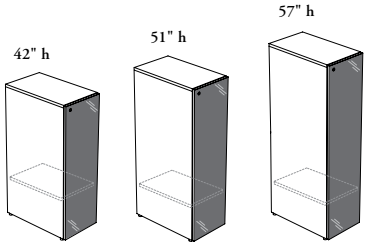

Wardrobe (W)

One Adjustable Shelf

freestanding tower basics (continued)

full door or two full doors freestanding towers (continued)

Freestanding Tower with Two Full Solid Doors (JNFTTS)

- Provides undivided Wardrobe (W) or Shelf (S) storage accessible from the front
- Available in heights of 42", 51" or 57", depths of 18", 24" or 30" and widths of 24", 30" or 36"
- When specified, the towers come with adjustable shelves. Holes at 1 1/4" intervals on the inside walls of side panels allow for shelf adjustment

Solid Door Fronts (S)

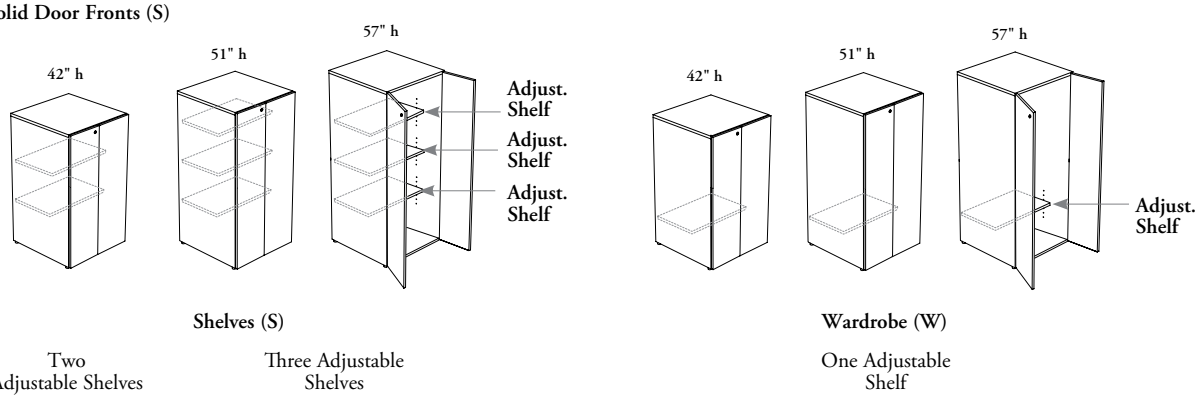

Shelves (S)

Two Adjustable Shelves

Three Adjustable Shelves

Wardrobe (W)

One Adjustable Shelf

freestanding tower basics (continued)

The following illustrates Expansion Cityline freestanding towers door & drawer nominal widths.

freestanding towers – door & drawer widths

Freestanding Tower with Drawers – Lateral Access (JNFTPL)

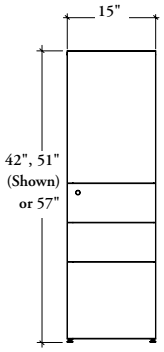

- The 15" wide freestanding towers are complete with 15" wide pedestal and have one fixed front panel

Freestanding Tower with Drawers and Wardrobe – Front Access (JNFTWF)

With Doors (D)

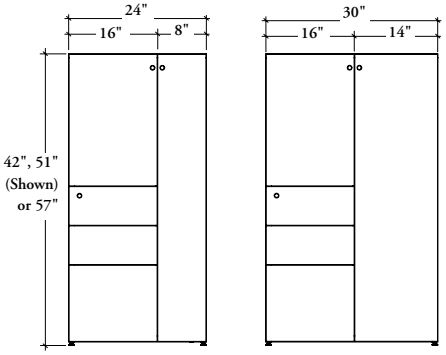

- The 24" or 30" wide half wardrobe units are complete with 16" wide pedestal and have one door on the secured storage section
- The 24" wide cabinet has a 8" wide wardrobe and the 30" wide cabinet has a 14" wide wardrobe

With Open Compartments (O)

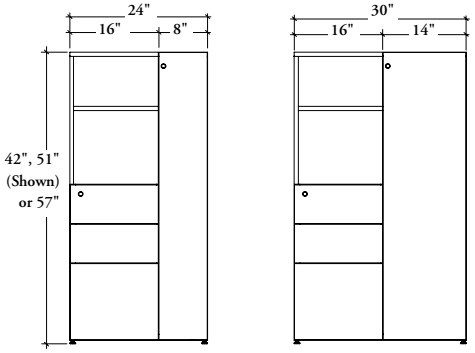

- The 24" or 30" wide half wardrobe units are complete with 16" wide pedestal and no door on open section
- The 24" wide cabinet has a 8" wide wardrobe and the 30" wide cabinet has a 14" wide wardrobe

planning with high freestanding storage & freestanding towers

The following should be considered when planning with Expansion Cityline Freestanding Towers.

Open storage higher than 28" and Freestanding Towers can be used as standalone or installed at one end of a worksurface to maintain stability

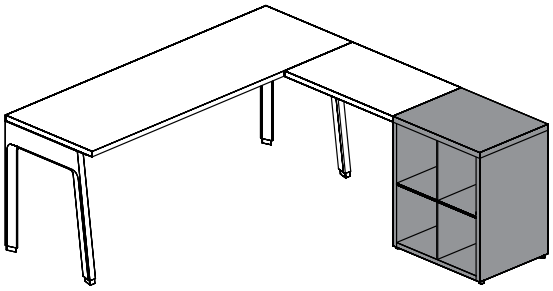

29" high storage can be used standalone or can be placed beside a worksurface to provide additional worksurface space

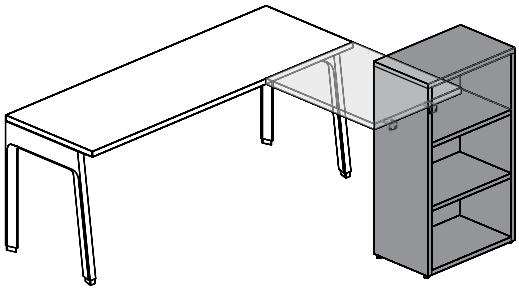

Worksurfaces can be mounted to the side or back of a high open storage or of Freestanding Towers using the Hang-On Kit (JNFKH) (**not** included with the storage)

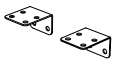

Hang-On Kit (JNFKH)

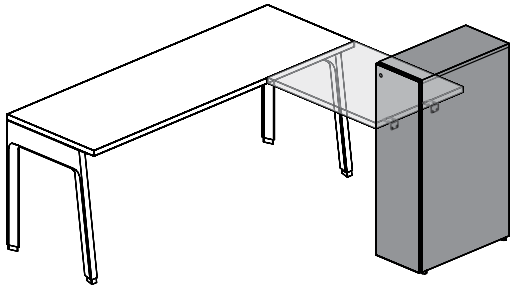

When mounted to the side or back of a high storage or tower, the surface and storage must be of the same dimension. The storage or tower could also be specified deeper than the worksurface

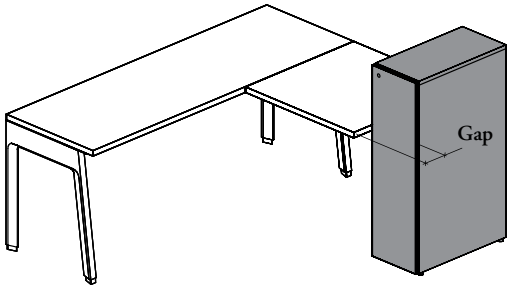

Storage or Tower **cannot** be narrower than worksurface

drawer widths – freestanding storage

The following illustrates Expansion Cityline Freestanding Storage drawer widths.

16" Storage Width

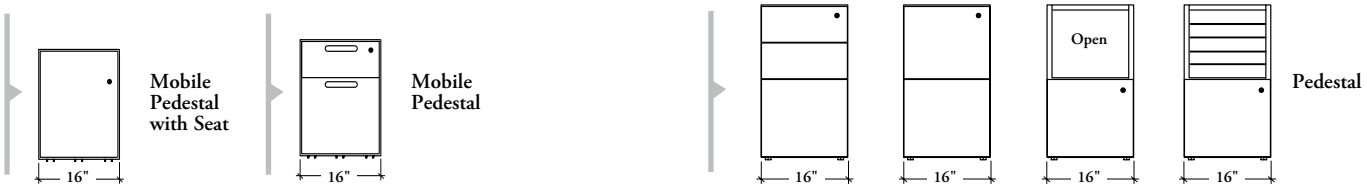

30" Storage Width

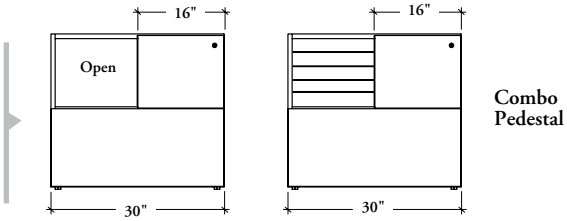

24" Storage Width | 30" Storage Width | 36" Storage Width

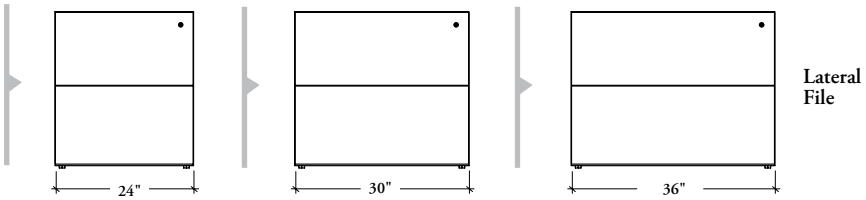

15" Storage Width | 24" Storage Width | 30" Storage Width

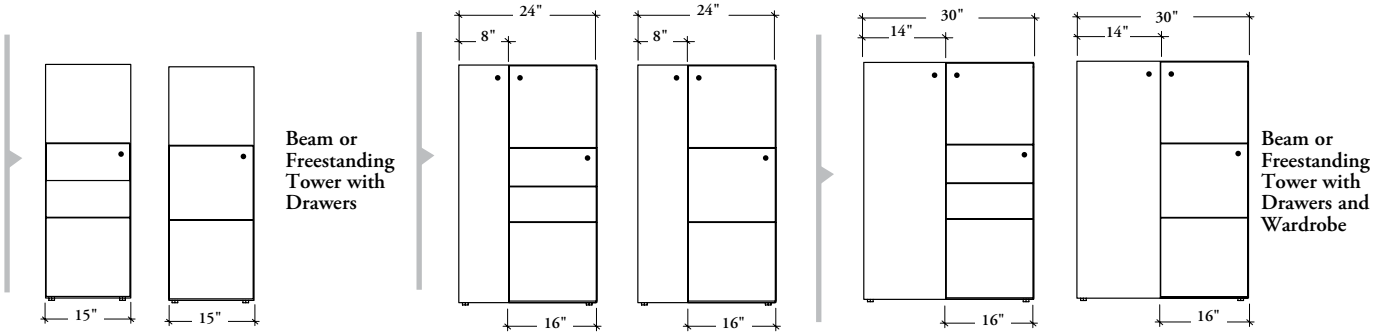

24" Storage Width | 30" Storage Width

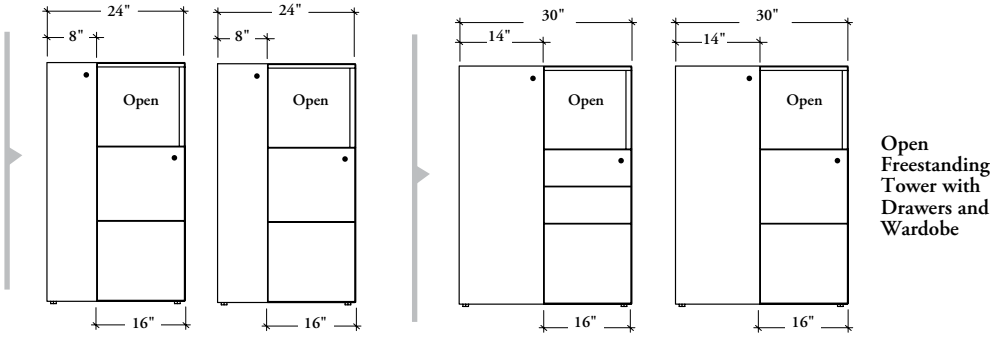

filing drawer capacities – freestanding storage

File drawer capacities are shown below.

The dimensions listed below are inside drawer

Hanging File Bar (JNFALB) can be ordered separately for replacement of original bars

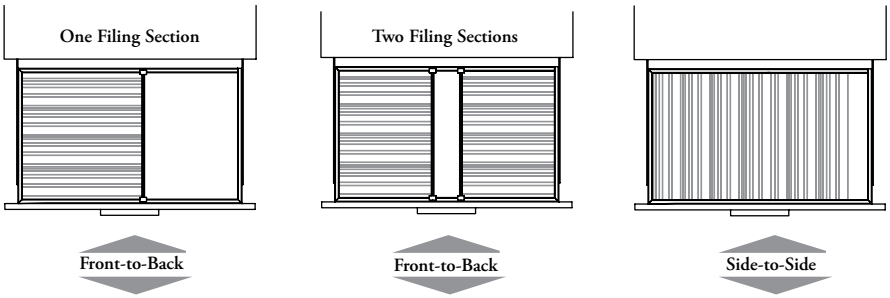

15" wide drawer

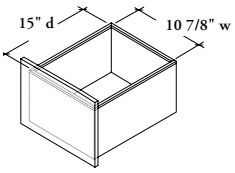

One Filing Section	Two Filing Sections	Side-to-Side
n/a	n/a	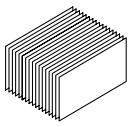 **Paper Size Allowed:** • Legal

16" wide drawer

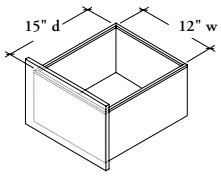

One Filing Section	Two Filing Sections	Side-to-Side
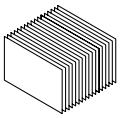 **Paper Size Allowed:** • Letter	n/a	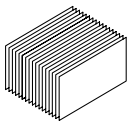 **Paper Sizes Allowed:** • Letter • Legal

24" wide drawer

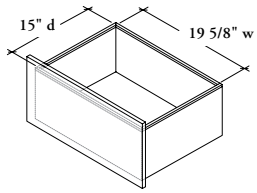

One Filing Section	Two Filing Sections	Side-to-Side
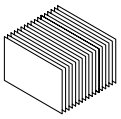 **Paper Sizes Allowed:** • Letter • Legal	n/a	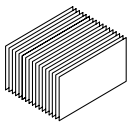 **Paper Sizes Allowed:** • Letter • Legal

30" wide drawer

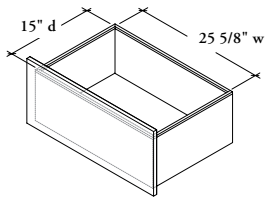

One Filing Section	Two Filing Sections	Side-to-Side
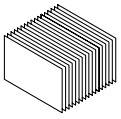 **Paper Sizes Allowed:** • Letter • Legal	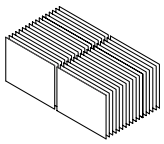 **Paper Size Allowed:** • Letter	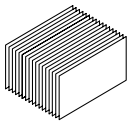 **Paper Size Allowed:** • Legal

36" wide drawer

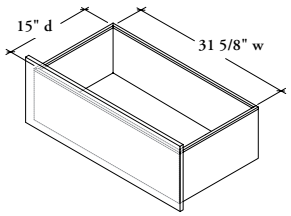

One Filing Section	Two Filing Sections	Side-to-Side
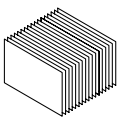 **Paper Sizes Allowed:** • Letter • Legal	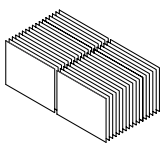 **Paper Sizes Allowed:** • Letter • Legal	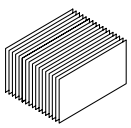 **Paper Size Allowed:** • Legal

lock chart – freestanding storage

If specified, all closed storage products come with a lock and key set and can be keyed alike or randomly. A Key Chart must accompagny every order, otherwise orders will be shipped keyed randomly

	number of locks		number of locks		number of locks
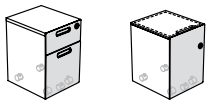 JNFPM JNFMP	1 x	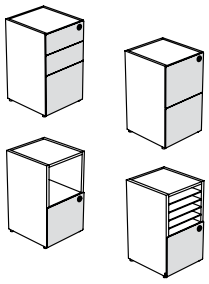 JNFPS	1 x	Upper Drawer on Left 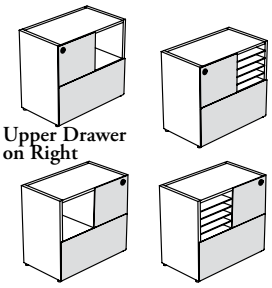 Upper Drawer on Right JNFCP	1 x
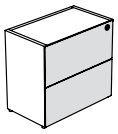 JNFLF	1 x	Left 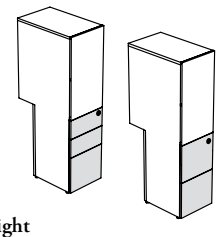 Right 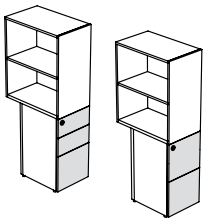 JNFBPL	1 x	Full Door on Left 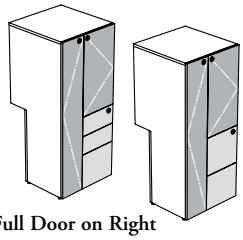 Full Door on Right 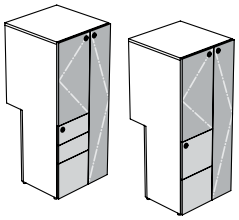 JNFBWF	3 x
Door Swing – Left 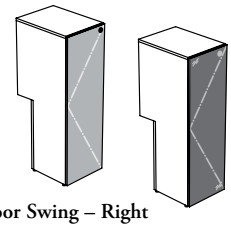 Door Swing – Right 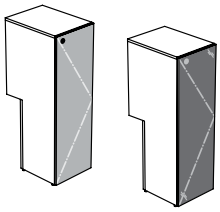 JNFBS or JNFBG	1 x	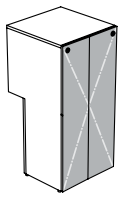 JNFBDS	2 x		

Lockable Double Doors | Lockable Single Door | Lockable Drawers | Not Lockable

lock chart – freestanding storage (continued)

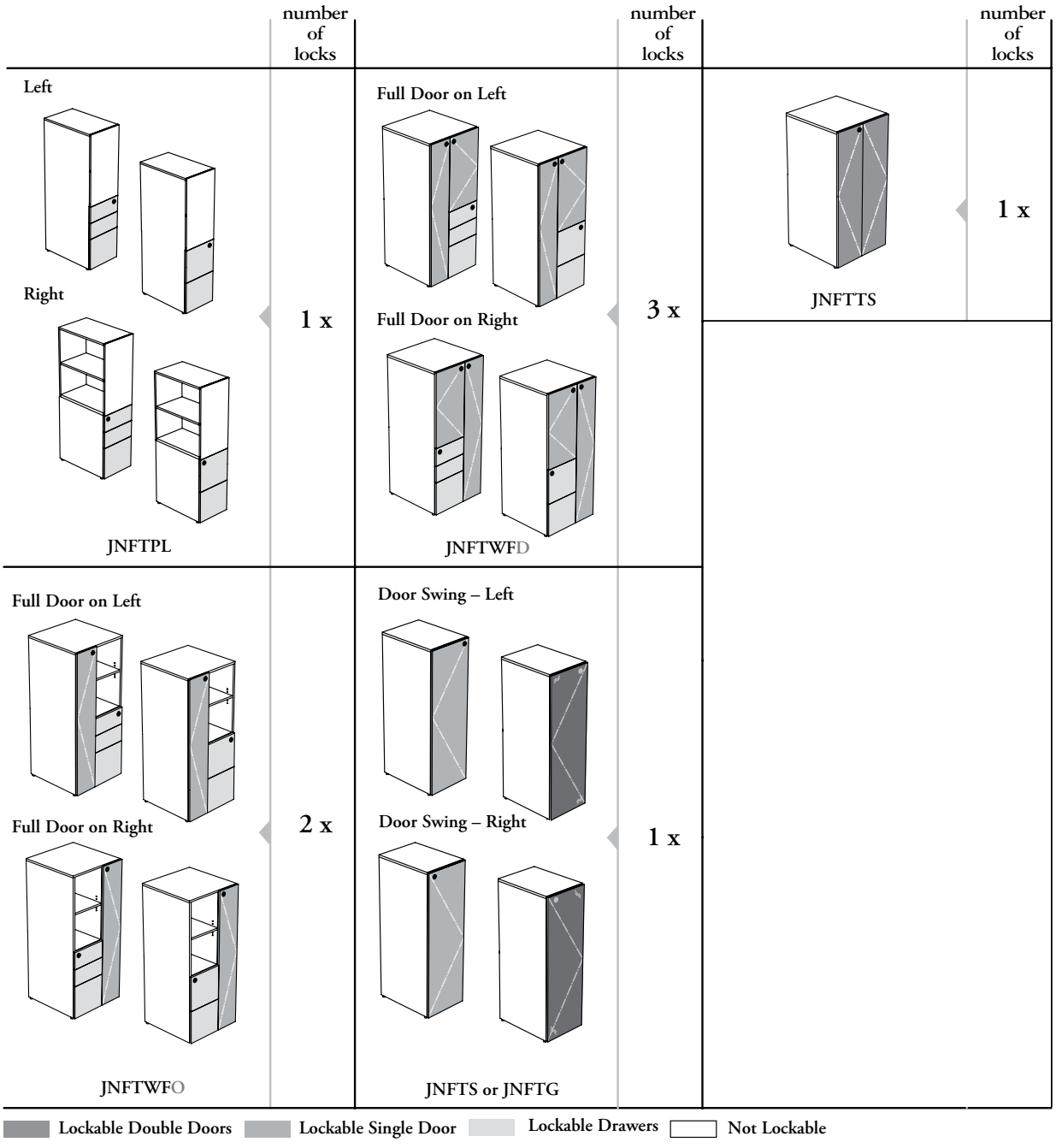

grain direction – freestanding storage

Attention the grain direction is important when planning with storage. The following examples demonstrate this. Laminates do not have one-way grain direction but rather a bi-directional grain pattern.

- Grain/patterns are **not** "centered" on storage unit
- Includes Source or Foundation Laminate (Standard, Finegrain and Straightgrain)
- Drawer and door front grain direction will always be vertical

underworksurface freestanding storage

Front

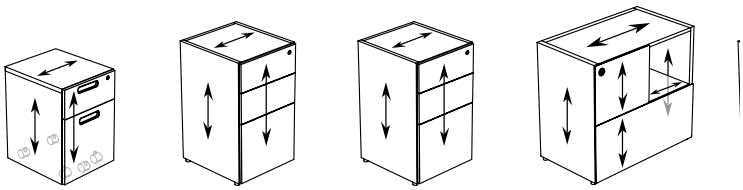

Back

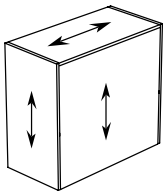

high open freestanding storage

Front

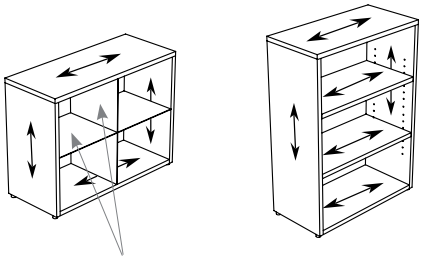

Back

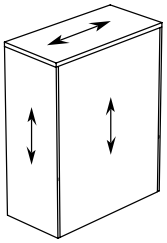

beam or freestanding towers

Front

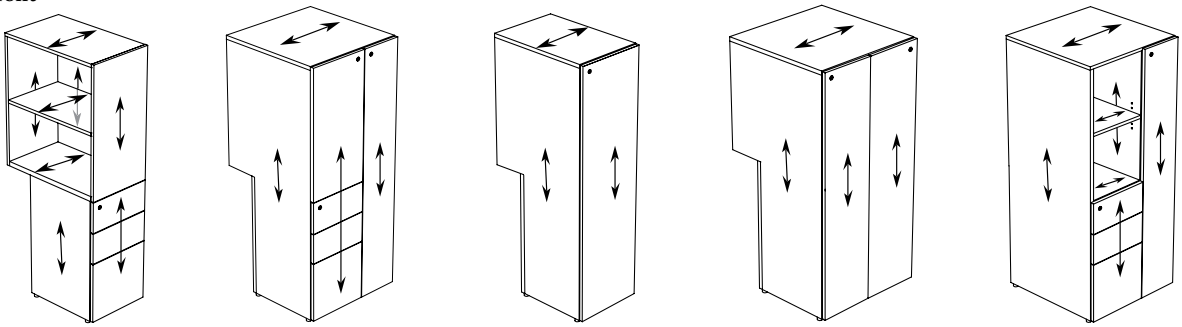

Back

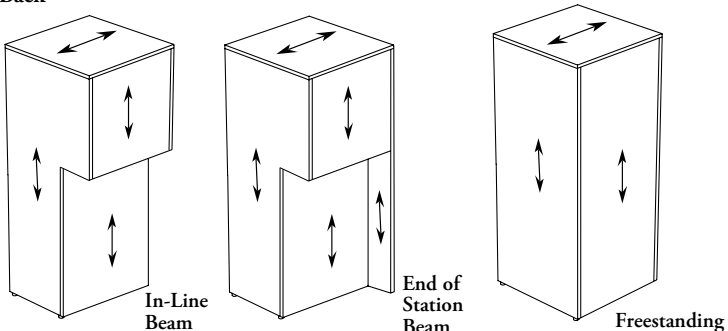

Laminate Grains ⟷ = Grain Direction =

lockers

lockers

UNDERSTANDING LOCKERS 684

LOCKER BASICS 687

PLANNING WITH LOCKERS 692

UNDERSTANDING RECYCLING/DISPOSAL UNITS 699

RECYCLING/DISPOSAL UNIT BASICS 701

PLANNING WITH RECYCLING/DISPOSAL UNITS. 704

ANGLED FOOT SHARING APPLICATIONS – ELEVATED LOCKERS & RECYCLING/DISPOSAL UNITS 708

DIGITAL LOCK DETAILS 712

DIGITAL LOCK KEY BASICS 713

PULL, STANDARD LOCK & DIGITAL LOCK POSITIONS – LOCKERS & RECYCLING/DISPOSAL UNITS 714

LOCK CHART – LOCKERS & RECYCLING/DISPOSAL UNITS 716

GRAIN DIRECTION – LOCKERS & RECYCLING/DISPOSAL UNITS . . . 718

lockers (continued)

NUMBER & SYMBOL IDENTIFICATION BASICS 719

PLANNING WITH NUMBER & SYMBOL IDENTIFICATIONS 721

understanding lockers

Expansion Cityline Lockers provide a variety of locker options for both personal and common storage and are available with doors or open, in Standard and Elevated profiles.

- When applicable, they can be specified Dual (D) or Triple (T) Configuration
- When applicable, the lockers are handed, except for Common Full Doors Lockers (JLFSD, JLFSG, JLESD or JLESG)
- Most closed storage come with optional standard locks and keys set or digital locks. Refer to Lock Chart at the end of this section for details
- Seven Interior configurations (C, D, H, N, O, S, T) can be specified. Refer on page 695 for more details

standard profile (with levelers)

Full Doors

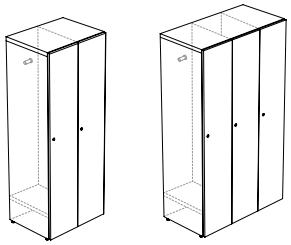

Dual (D) Triple (T)

JLFFD

- Each door section opens in the same direction

Full Glass Doors

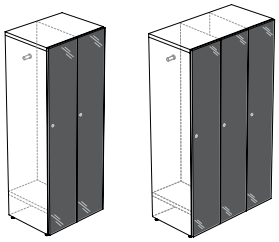

Dual (D) Triple (T)

JLFFG

Full Doors – Common

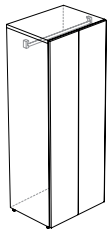

JLFSD

- Doors open from middle

Full Glass Doors – Common

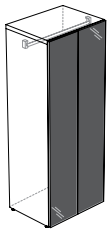

JLFSG

Two-High Cubbies

Two-High – Doors

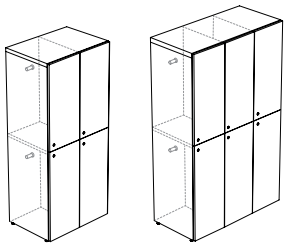

Dual (D) Triple (T)

JLFC2

- Each door section opens in the same direction

Two-High – Open

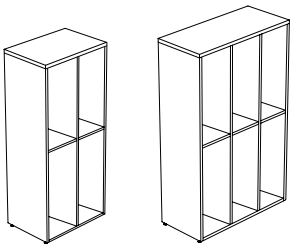

Dual (D) Triple (T)

JLFB2

Three-High Cubbies

Three-High – Doors

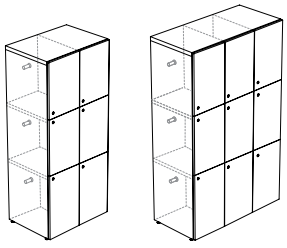

Dual (D) Triple (T)

JLFC3

- Each door section opens in the same direction

Three-High – Open

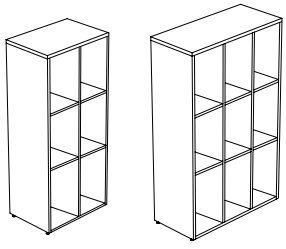

Dual (D) Triple (T)

JLFB3

levelers

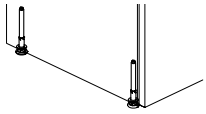

Standard Lockers offer a 3" leveling range

understanding lockers (continued)

elevated profile (with angled foot)

Full Doors

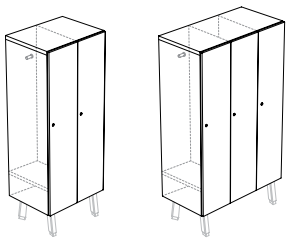

Dual (D) Triple (T)

JLEFD

- Each door section opens in the same direction

Full Glass Doors

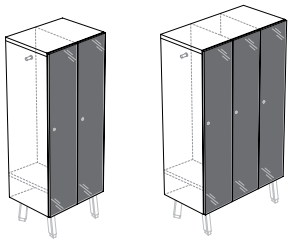

Dual (D) Triple (T)

JLEFG

Full Doors – Common

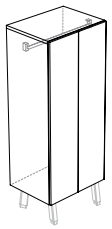

JLESD

- Doors open from middle

Full Glass Doors – Common

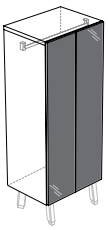

JLESG

Two-High Cubbies

Two-High – Doors

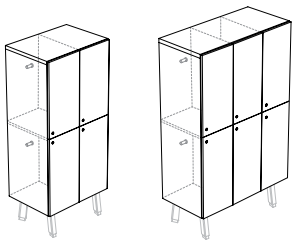

Dual (D) Triple (T)

JLEC2

- Each door section opens in the same direction

Two-High – Open

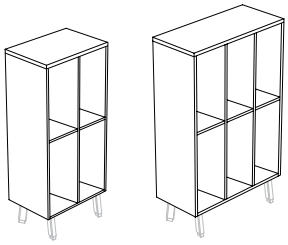

Dual (D) Triple (T)

JLEB2

Three-High Cubbies

Three-High – Doors

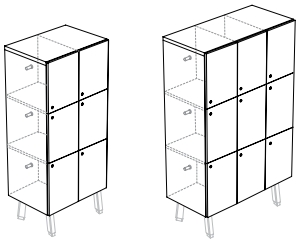

Dual (D) Triple (T)

JLEC3

- Each door section opens in the same direction

Three-High – Open

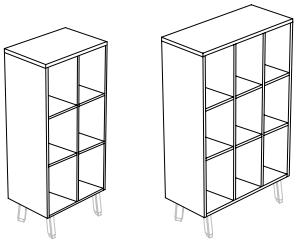

Dual (D) Triple (T)

JLEB3

angled foot kit

- Angled Foot Kit for Elevated Storage (JLEFK) is **not** included with Elevated Lockers and must be specified separately. Their position can vary. Refer on page 708 for more details
- Leveling range of 3" (-3/16", +2 13/16") for lockers with Angled Foot Kit

understanding lockers (continued)

- All doors come with an individual lock when specified. **Not** applicable with Common Full Doors Lockers
- Door Swing Left (L) or Right (R) is determined by location of the hinges.
- No Identification (N), Number Ready (R) or Symbol Ready (S) can be specified on solid or metal doors

solid door

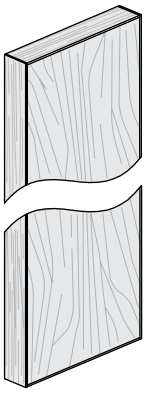

When specified, **Number Ready (R) or Symbol Ready (S)**

Comes with pre-drilled holes for Locker Number or Common Locker Symbol

Doors specified without Pull come with Touch-Latch Opening

Solid (S)/ No Lock (N)

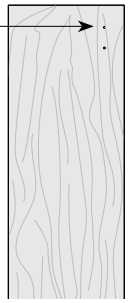

Solid (S)/Lock (K or R)

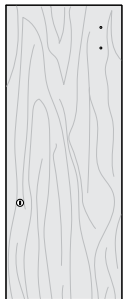

Solid Doors specified with pull or Digilock Lock come with Self-Closing Hinges

Solid with Pull (T)/No Lock (N)

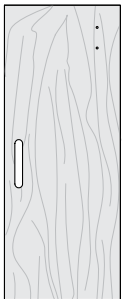

Solid with Pull (T)/Lock (K or R)

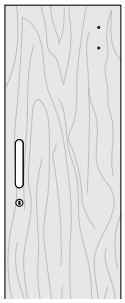

Solid with Digital Lock (U)/Digital Lock Assigned (A))

metal door

Thin Metal Front

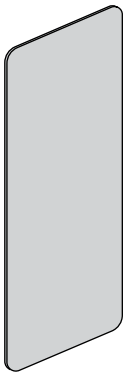

When specified, **Number Ready (R) or Symbol Ready (S)**

Reinforcing Bar

Metal (M)/ No Lock (N)

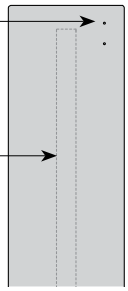

Metal (M)/ Lock (K or R)

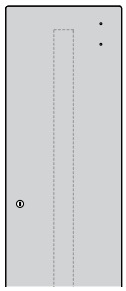

Metal Doors specified with pull or Digilock Lock come with Soft-Closing Hinges

Metal with Pull (N)/No Lock (N)

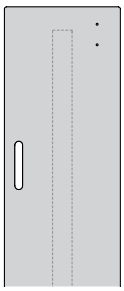

Metal with Pull (N)/Lock (K or R)

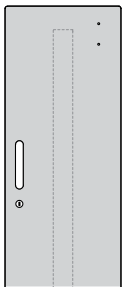

Metal with Digital Lock (O)/Digital Lock Assigned (A))

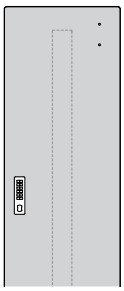

glass door

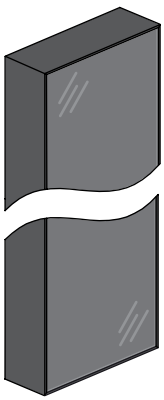

Number Ready (R) or Symbol Ready (S) cannot be specified

No Lock (N)

Standard Lock (K or R)

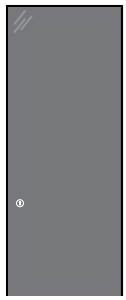

Pull Style available:

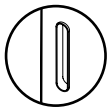

Cityline Recessed (C)
- Vertical Position
- Lockers come with 1 pull on each door

Lock Styles available:

Standard Locks (K or R)

Digital Lock Assigned (A)
For more details on Digital Lock, refer on page 712

Locker Number or Common Locker Symbol available:

JLANN **JLASS**

Not included with Lockers and must be specified separately. Refer to page 719 for more details

locker basics

Lockers provide personal or common storage, with side hooks, coat rod or shelf storage in a variety of configurations.

- Standard and Elevated **cannot** be linked together
- Can be linked to each other or to Recycling/Disposal Units
- The Interior Configuration can vary depending of the locker style. Refer on page 695 for more details

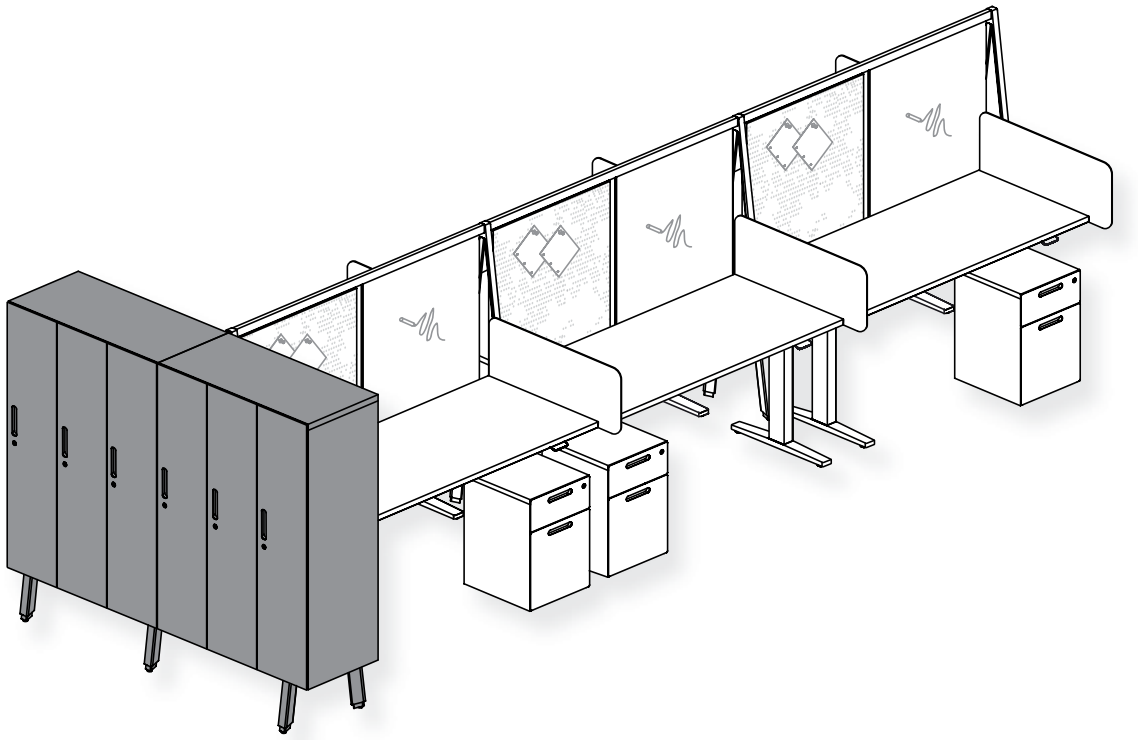

Finishes

Metal Door Front Finishes*: Foundation, Mica and Accent
Laminate Door Front Finishes:** Source Laminate and Foundation Laminate
* Laminate **Front Doors** are 11/16" thick
Edge Trim Finishes: Edge Trim Colors (Laminate Front only)
Door Frame Finishes: Foundation, Mica and Accent
Glass Door Finishes: Back-Painted**
** **Glass Doors** are 5/32" (4 mm) tempered glass
Pull Finishes (if applicable): Foundation, Mica and Accent
Case Finishes: Source Laminate
Fixed or Adjustable Shelf(ves)* Finishes:** Source Laminate or match with Case Finish
*** Shelves are 11/16" thick
Side Hooks Finish: Platinum Coordinate
Coat Rod Finish: Chrome

locker basics (continued)

- Triple Lockers with 18" doors width are **not** offered in all heights. Refer individual product pages

Locker – Full Doors (JLFFD), Locker – Full Glass Doors (JLFFG)
Elevated Locker – Full Doors (JLEFD) or Elevated Locker – Full Glass Doors (JLEFG)

- Lockers have two or three full height doors
- Front styles: Metal (M), Solid (S), Metal with Pull (N), Solid with Pull (T) Metal with Digital Lock (O) or Solid with Digital Lock (U). Full Glass Doors Lockers (JLFFG or JLEFG) are also available
- Datum heights of 42", 51", 57" or 66"
- Depths: 18" or 24"
- Door widths: 12" or 15"
- Configurations: Dual (D) or Triple (T)
- Door Swing directions Left (L) or Right (R) (Shown) are available
- Number Ready (R) Identification or No Identification (N) (Shown) can be specified on door fronts. **Not** available with Full Glass Doors (JLFFG or JLEFG)
- Interior Configuration Side Hooks (H), Side Hooks & Shelf (O) or Side Hooks & Shelves (T) are available
- When specified, Cityline Recessed (C) pull style is only available with Metal with Pull (N) or Solid with Pull (T). **Not** available with Full Glass Doors (JLFFG or JLEFG)
- Standard (Shown) or Digital Locks can be specified. Digital Lock option is **not** available with Full Glass Doors (JLFFG or JLEFG)

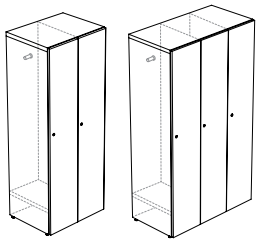

JLFFD

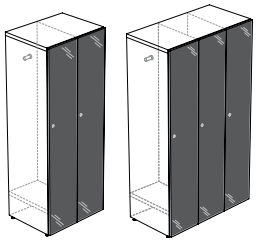

JLFFG

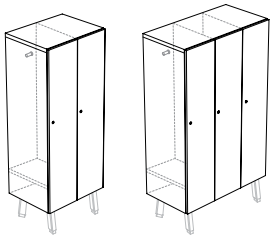

JLEFD

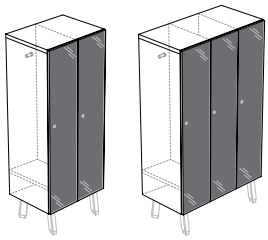

JLEFG

Locker – Two-High Cubby (JLFC2) or
Elevated Locker – Two-High Cubby (JLEC2)

- Lockers with Two-High Cubby have four or six cubbies per unit
- Front styles: Metal (M), Solid (S), Metal with Pull (N), Solid with Pull (T) Metal with Digital Lock (O) or Solid with Digital Lock (U)
- Datum heights of 42", 51", 57" or 66"
- Depths: 18" or 24"
- Door widths: 15" or 18"
- Configurations: Dual (D) or Triple (T)
- Door Swing directions Left (L) or Right (R) (Shown) are available
- Number Ready (R) Identification or No Identification (N) (Shown) can be specified on door fronts
- Interior Configuration Side Hooks (H), Shelf (S) or No Accessory (N) are available
- When specified, Cityline Recessed (C) pull style is only available with Metal with Pull (N) or Solid with Pull (T)
- Standard (Shown) or Digital Locks can be specified

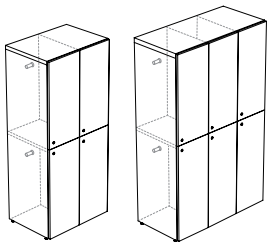

JLFC2

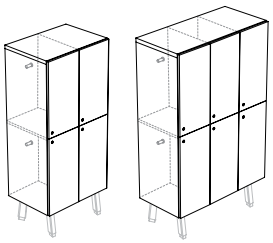

JLEC2

locker basics (continued)

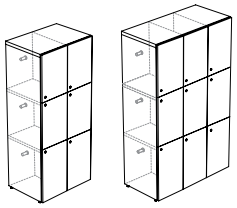

JLFC3

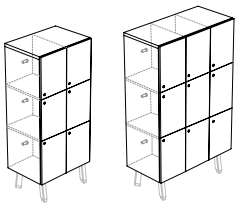

JLEC3

Locker – Three-High Cubby (JLFC3) or
Elevated Locker – Three-High Cubby (JLEC3)

- Lockers with Three-High Cubby have six or nine cubbies per unit
- Front styles: Metal (M), Solid (S), Metal with Pull (N), Solid with Pull (T) Metal with Digital Lock (O) or Solid with Digital Lock (U)
- Datum heights of 57" or 66"
- Depths: 18" or 24"
- Door widths: 15" or 18"
- Configurations: Dual (D) or Triple (T)
- Door Swing directions Left (L) or Right (R) (Shown) are available
- Number Ready (R) Identification or No Identification (N) (Shown) can be specified on door fronts
- Interior Configuration Side Hooks (H), Shelf (S) or No Accessory (N) are available
- When specified, Cityline Recessed (C) pull style is only available with Metal with Pull (N) or Solid with Pull (T)
- Standard (Shown) or Digital Locks can be specified

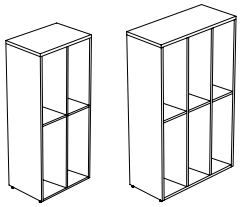

JLFB2

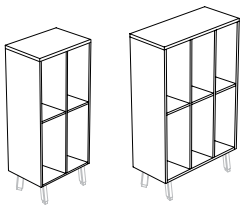

JLEB2

Open Locker – Two-High Cubby (JLFB2) or
Elevated Open Locker – Two-High Cubby (JLEB2)

- Lockers with Two-High Cubby have four or six open cubbies per unit
- Datum heights of 42", 51", 57" or 66"
- Depths: 18" or 24"
- Open section widths: 15" or 18"
- Configurations: Dual (D) or Triple (T)
- Interior Configuration Shelf (S) or No Accessory (N) (Shown) are available

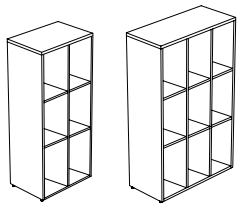

JLFB3

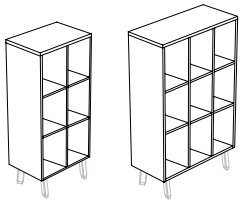

JLEB3

Open Locker – Three-High Cubby (JLFB3) or
Elevated Open Locker – Three-High Cubby (JLEB3)

- Lockers with Three-High Cubby have six or nine open cubbies per unit
- Datum heights of 57" or 66"
- Depths: 18" or 24"
- Open section widths: 15" or 18"
- Configurations: Dual (D) or Triple (T)
- Only No Accessory (N) Interior Configuration is available

locker basics (continued)

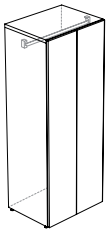

Common Locker – Full Doors (JLFSD)

- Lockers have two full height solid doors
- Front styles: Metal (M), Solid (S), Metal with Pull (N) or Solid with Pull (T)
- Datum heights of 51", 57" or 66"
- Depth: 24"
- Widths: 24", 30", 36"
- Symbol Ready (R) Identification or No Identification (N) (Shown) can be specified on door front
- Interior Configuration Coat Rod (C) or Coat Rod & Shelf (D) are available
- Cityline Recessed (C) pull style is only available with Metal with Pull (N) or Solid with Pull (T)

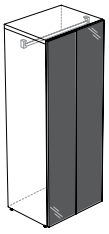

Common Locker – Full Glass Doors (JLFSG)

- Lockers have two full height glass doors
- Datum heights of 51", 57" or 66"
- Depth: 24"
- Widths: 24", 30", 36"
- Interior Configuration Coat Rod (C) or Coat Rod & Shelf (D) are available

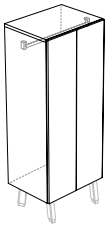

Elevated Common Locker – Full Doors (JLESD)

- Lockers have two full height solid doors
- Front styles: Metal (M), Solid (S), Metal with Pull (N) or Solid with Pull (T)
- Datum heights of 57" or 66"
- Depth: 24"
- Widths: 24", 30", 36"
- Symbol Ready (R) Identification or No Identification (N) (Shown) can be specified on door front
- Only Interior Configuration Coat Rod (C) is available
- Cityline Recessed (C) pull style is only available with Metal with Pull (N) or Solid with Pull (T)

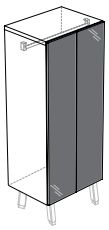

Elevated Common Locker – Full Glass Doors (JLESG)

- Lockers have two full height glass doors
- Datum heights of 57" or 66"
- Depth: 24"
- Widths: 24", 30", 36"
- Only Interior Configuration Coat Rod (C) is available

planning with lockers

The following outlines the door and opening heights for all Lockers. When specified, the pull and lock height varies depending on the number of doors on the unit.

door openings

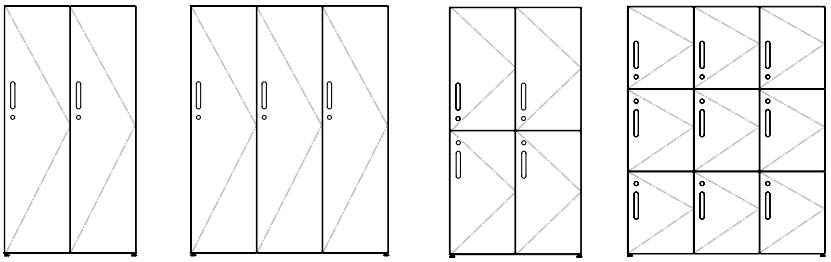

Full Doors, Full Glass Doors, Two-High Cubbies or Three-High Cubbies Lockers – Dual or Triple – Standard or Elevated

- All sections open is the same direction
- Door Swing – Left or Door Swing – Right Orientation can be specified

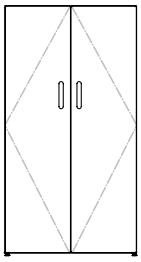

Full Doors or Full Glass Doors Common Lockers – Standard or Elevated

- Will open from middle

door heights and overall opening heights – standard lockers

- All interior heights are equal
- The Interior Configuration is **not** illustrated, refer on page 695 for more details

Interior compartment dimensions without accessory – Lockers

42" datum height

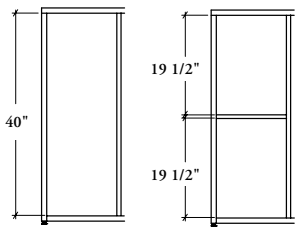

Inside locker full doors

Inside two-high Cubby or Open Cubby

51" datum height

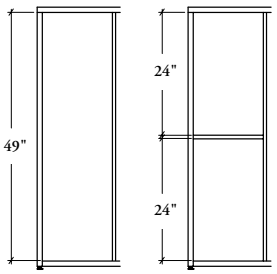

Inside locker full doors

Inside two-high Cubby or Open Cubby

Interior compartment dimensions without accessory – Lockers

57" datum height

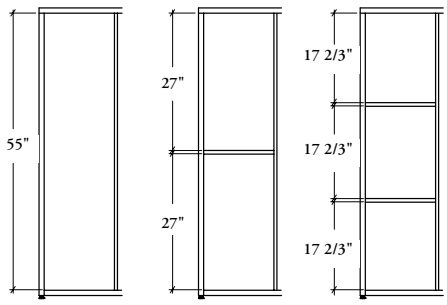

Inside locker full doors

Inside two-high Cubby or Open Cubby

Inside three-high Cubby or Open Cubby

planning with lockers (continued)

door heights and overall opening heights – standard lockers (continued)

Interior compartment dimensions without accessory – Lockers

66" datum height

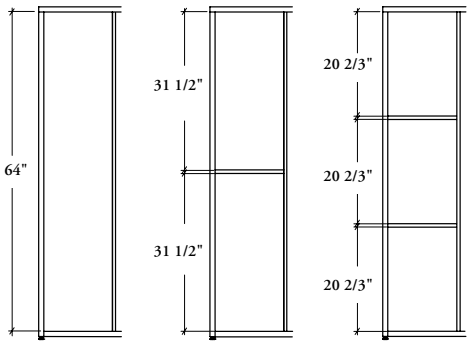

Inside locker full doors | Inside two-high Cubby or Open Cubby | Inside three-high Cubby or Open Cubby

Interior compartment dimensions without accessory – Standard Common Lockers

51", 57" & 66" datum heights

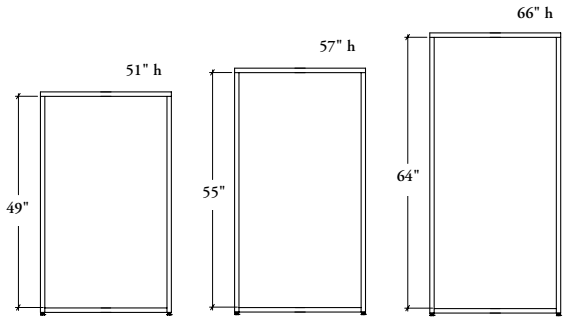

Inside two full doors

door heights and overall opening heights – elevated lockers

Interior compartment dimensions without accessory – Elevated Lockers

42" datum height

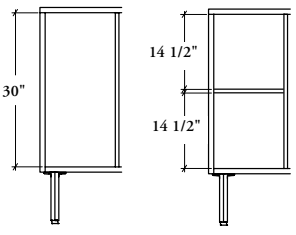

Inside locker full doors | Inside two-high Cubby or Open Cubby

51" datum height

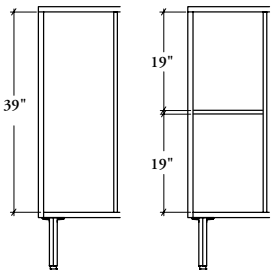

Inside locker full doors | Inside two-high Cubby or Open Cubby

planning with lockers (continued)

door heights and overall opening heights – elevated lockers (continued)

57" datum height

Interior compartment dimensions without accessory – Elevated Lockers

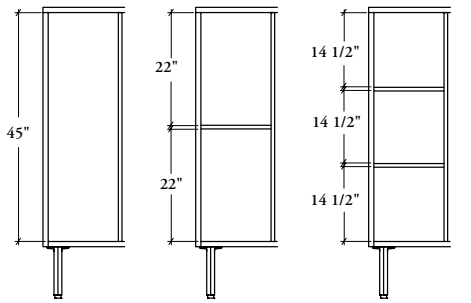

Inside locker full doors | Inside two-high Cubby or Open Cubby | Inside three-high Cubby or Open Cubby

66" datum height

Interior compartment dimensions without accessory – Elevated Lockers

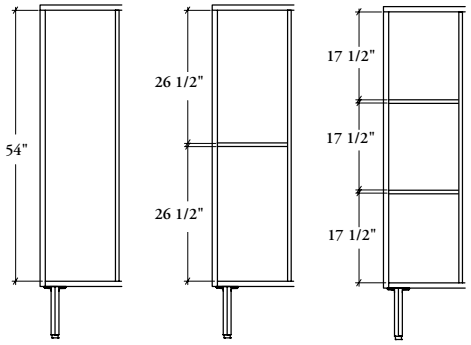

Inside locker full doors | Inside two-high Cubby or Open Cubby | Inside three-high Cubby or Open Cubby

57" & 66" datum heights

Interior compartment dimensions without accessory – Elevated Common Lockers

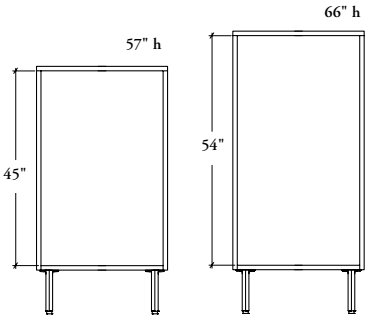

Inside two full doors

planning with lockers (continued)

The following outlines the side hooks and/or shelf(ves) heights for all Lockers.

- All dual or triple locker sections have the same specified accessories
- For Overall Opening Heights, refer on page 692 for more details

interior configurations

Eight interior configurations are available:

1

No Accessory (N)

- Without Side Hooks and/or Shelf(ves)

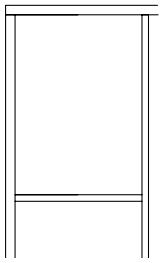

2

Side Hooks (H)

- Two Side Hooks positioned on top of each side of each section

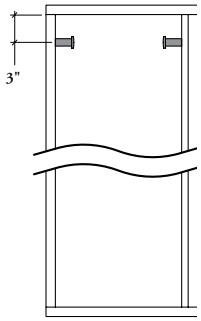

3

Side Hooks & Shelf (O)

- Two Side Hooks and one Shelf
- Are **user reconfigurable** without tool:
  - – Side Hooks can be placed on top and Shelf at the bottom of section

  Bottom shelf is adjustable in 1 1/4" increments from 6" to 12 1/4"

  OR

  - – Shelf can be placed on top and Side Hooks under the Shelf

  Fixed Shelf is positioned in 8" from top

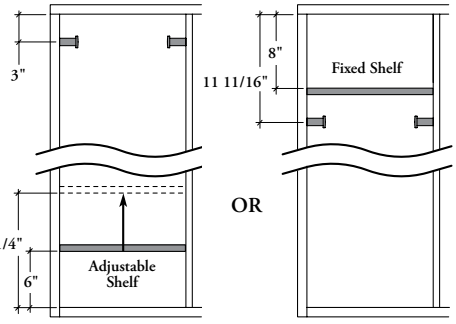

4

Side Hooks & Shelves (T)

- Two Shelves and two Side Hooks
- Fixed Shelf is positioned in 8" from top

AND

- Bottom shelf is adjustable in 1 1/4" increments from 6" to 12 1/4"

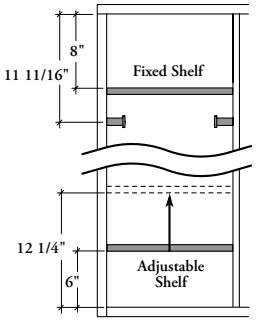

5

Shelf (S)

- One Shelf per closed sections
- Shelf is fully adjustable in 1 1/4" increments, from 6" from bottom to 6" from top

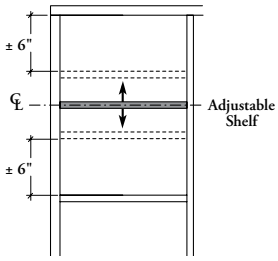

6

Shelf (S) – Open Locker Two-High Cubbies

- One Shelf per open sections
- Are **user reconfigurable** without tools:
  - – One Adjustable Shelf with three fixed positions using proportion: 1/3, 1/2, 2/3

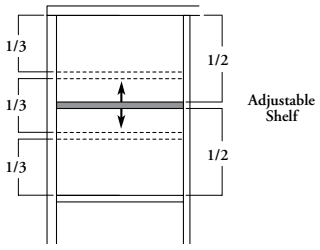

7

Coat Rod (C)

- One Coat Rod only
- Positioned on top of Common Lockers

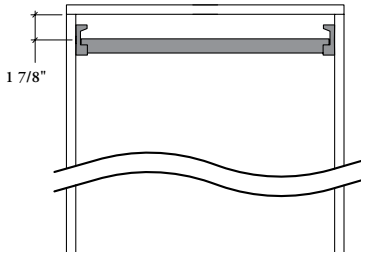

8

Coat Rod & Shelf (D)

- One Coat Rod and one Shelf
- Fixed Shelf is positioned in 8" from the top

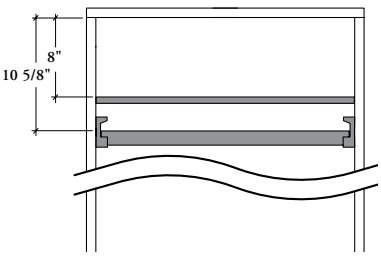

planning with lockers (continued)

The following should be considered when planning with Expansion Cityline Lockers.

Expansion Cityline Lockers are freestanding units. They **do not** need to be anchored to anything.Therefore they can be used against a building wall, at the end of a workstation or as space division in the middle of open space

against a wall

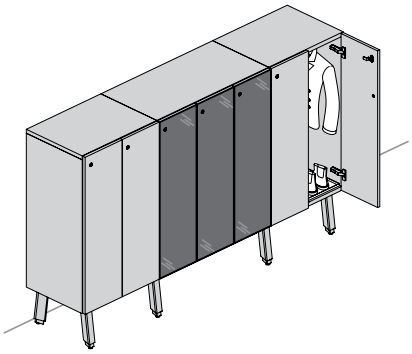

Against a wall application is ideal to create lockers outside of workstation area

against a workstation

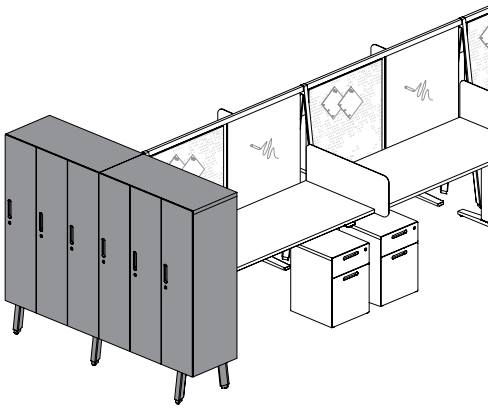

Against a workstation application allows the users to drop personal items before going to the workstation. Can also act as a space division between corridor and workstations

middle of the space

Lockers in middle of the space help to break up areas to divide teams or collaborative areas

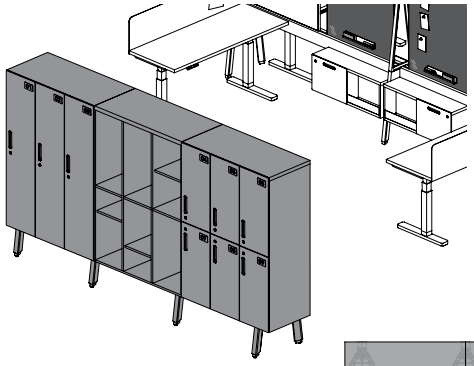

- Can be place side-by-side (linear run) with fronts in the same direction

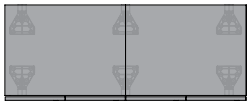

Other positions available:

- Can also be place side-by-side (linear run) with fronts in opposite directions (offset)

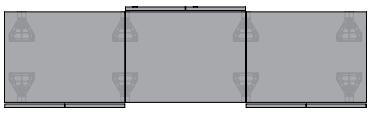

- Can also be place back-to-back. Each side are independant and **not** linked together

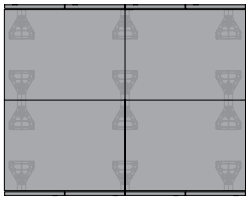

planning with lockers (continued)

standard lockers with elevated lockers

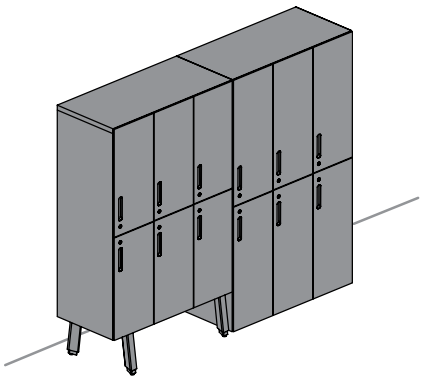

Standard Lockers with Levelers **cannot** be linked with Elevated Lockers

lockers with recycling/disposal units

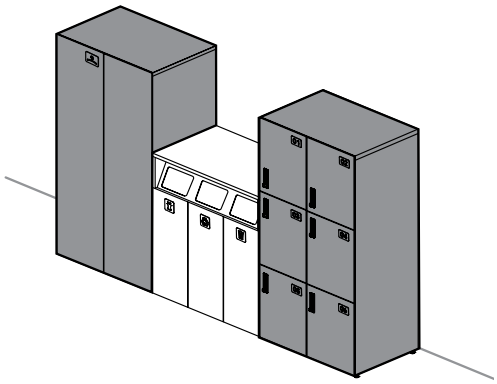

Lockers, Common Lockers and Recycling/ Disposal Units can be used alone or combined together to create the desired layout

linking standard lockers

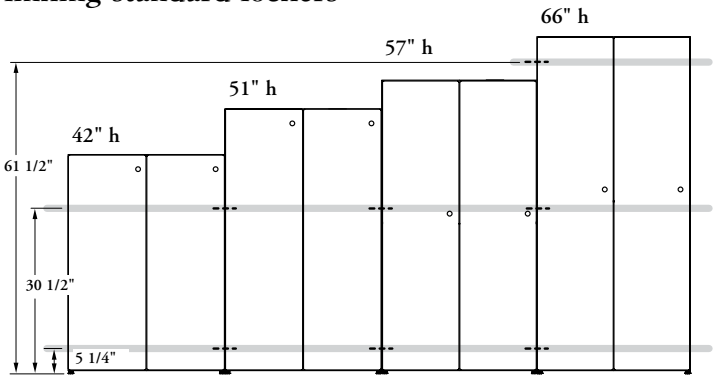

Lockers of different heights with the same depth can be linked to each other

linking elevated lockers

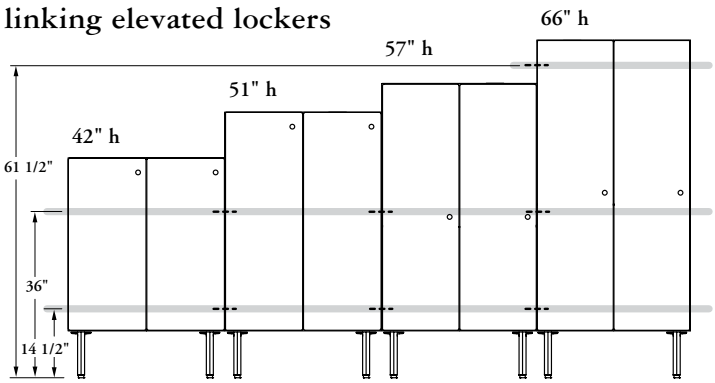

Elevated Lockers of different heights with the same depth can be linked to each other

planning with lockers (continued)

minimum lockers/recycling/disposal units span

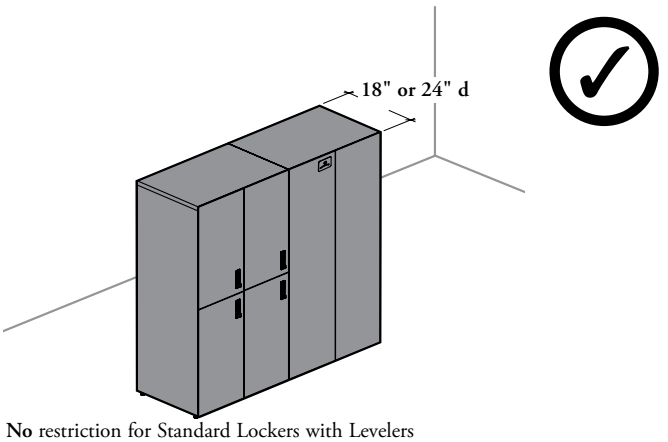

No restriction for Standard Lockers with Levelers

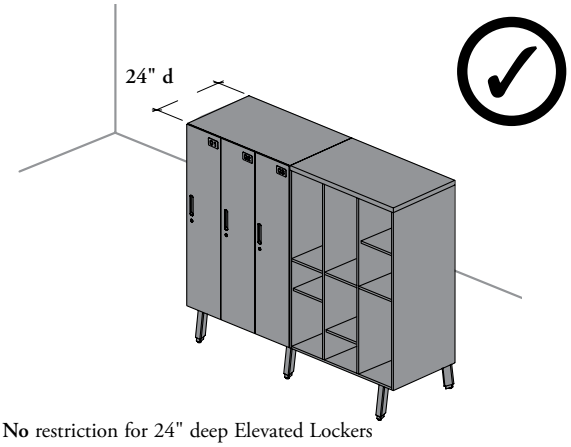

No restriction for 24" deep Elevated Lockers

Special considerations must be taken when 18" deep Elevated Lockers or Elevated Recycling/Disposal Units are specified

No minimum span in the following applications:

– Against a building (Shown)
– Middle of the space : Back-to-Back

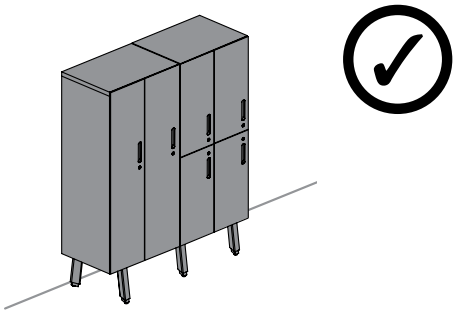

Minimum span in the following applications:

– Middle of the space : Single-Sided (one direction) (Shown)
– Middle of the space : Single-Sided (two direction – offset)
– Against a workstation

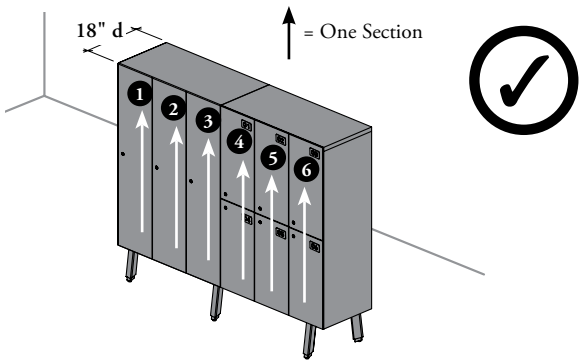

Elevated Lockers or Elevated Recycling/Disposal Units of the same height must totalize the equivalent of minimum 6 doors/open section side by side

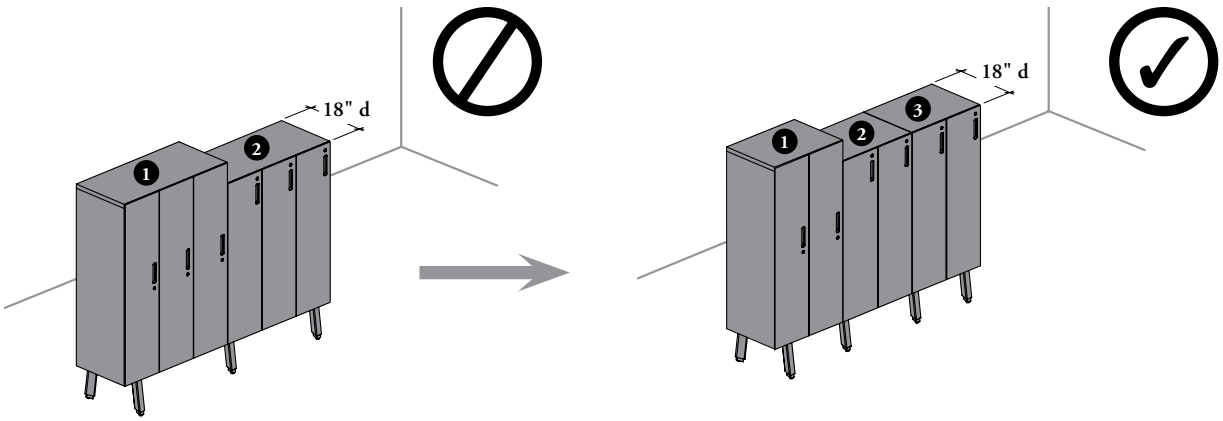

Elevated Lockers or Elevated Recycling/Disposal Units of different heights must totalize a minimum of three storage

understanding recycling/disposal units

Recycling/Disposal Units are also available in a variety of widths and configurations. They combine reclycling/waste bins with or without enclosed storage with shelves.

- All units are offered to match with Teknion standard datum height of 42"
- Metal (M) or Solid Front Style (S) can be specified
- Door fronts have **no** pull and can be handled with the fingertips from the top of the door

standard profile (with levelers)

Recycling/Disposal Units (JLFRU)

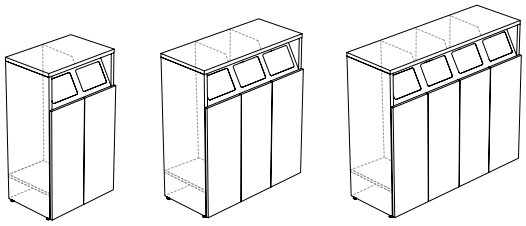

Dual (D) Triple (T) Quadruple (Q)

Recycling/Disposal Units with Storage (JLFRS)

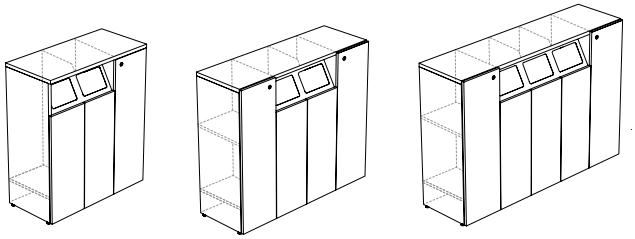

36" w 48" or 54" w 60" or 66" w

levelers

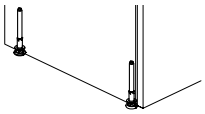

Standard profil has a 3" leveling range

elevated profile (with angled foot)

Elevated Recycling/Disposal Units (JLERU)

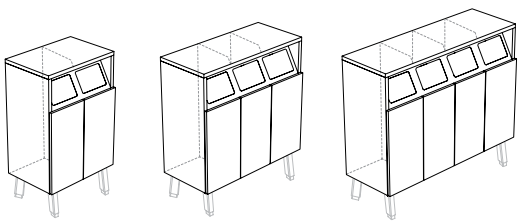

Dual (D) Triple (T) Quadruple (Q)

angled foot kit

- Angled Foot Kit for Elevated Storage (JLEFK) are **not** included with Recycling/Disposal Units and must be specified separately. Their positions can vary. Refer on page 708 for more details
- Leveling range of 3" (-3/16", +2 13/16") for units with Angled Foot Kit

understanding recycling/disposal units (continued)

- When specified, only Storage Doors come with individual lock (waste/recycling section **cannot** be locked)
- **No** Pulls and Digital Locks are offered
- Only 36" wide Recycling/Disposal Unit with Storage (JLFRS) comes with Storage Position Left (L) or Right (R) and is determined by location of the hinges
- No Identification (N) or Symbol Ready (S) can be specified on recycling/waste section only

Each Storage Door comes with Touch-Latch Opening

solid door

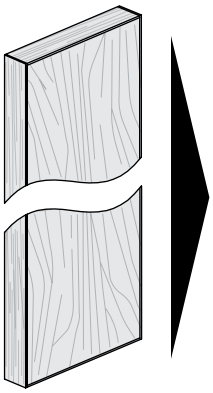

Solid (S)/ No Lock (N)

Solid (S)/Lock (K or R)

Each Solid Recycling/Waste Doors comes with Self-Closing Hinges

When specified, **Symbol Ready (S)**

Comes with pre-drilled holes for Symbol Indentification

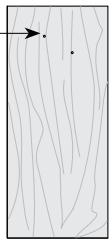

metal door

Thin Metal Front

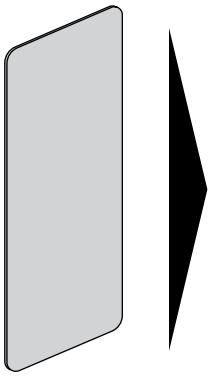

Reinforcing Bar

Metal (M)/ No Lock (N)

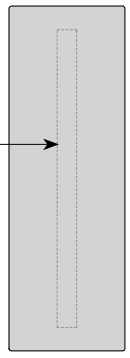

Metal (M)/ Lock (K or R)

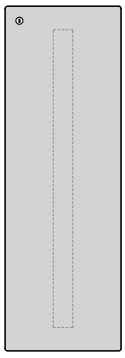

Each Metal Recycling/Waste Doors comes with Soft-Closing Hinges

When specified, **Symbol Ready (S)**

Comes with pre-drilled holes for Symbol Indentification

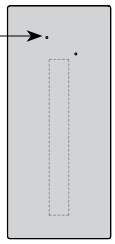

Lock Styles available:

Standard Locks (K or R)

Symbol Identifications available:

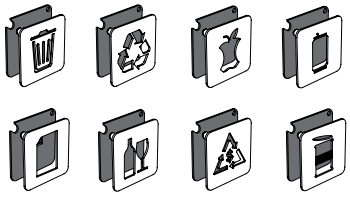

Recycling/Disposal Unit Symbol (JLASR)

Not included with Units and must be specified separately. Refer on page 719 for more details

recycling/disposal unit basics

The Recycling/Disposal Units provide centralized enclosed space for Recycling/Waste Bins for the workstations.

- Metal (M) or Solid Front Style (S) can be specified
- Waste/Recycling Bins are included for each Waste/Recycling section
- Each Waste/Recycling Bin has a capacity of 38 Liter
- A Fixed Angled Metal Opening Fascia is included and protect the surrondings of the openings
- If applicable, can be linked to each other or to Lockers
- Each waste compartment can be identified by a Recycling/Disposal Unit Symbol (JLASR), sold separately. The door front comes with pre-drill holes, when Symbol Ready (S) is specified

Recycling/Disposal Unit Symbols

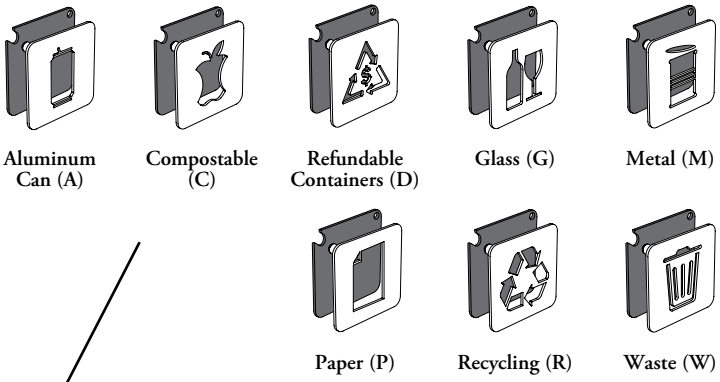

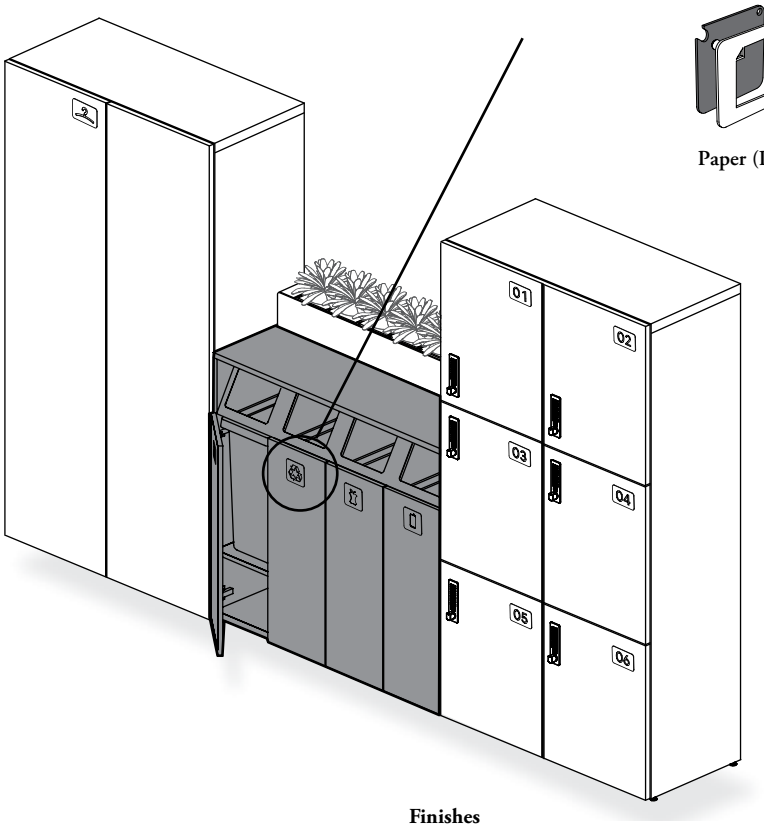

Finishes

Case Finish: Source Laminate
Metal Front Door Finishes: Foundation, Mica and Accent
Solid Front Door* Finish: Source Laminate
* **Front, Doors** are 11/16" thick
Edge Trim Finishes: Edge Trim Colors (Laminate Front only)
Opening Fascia Finishes: Foundation, Mica or Accent
Fixed or Adjustable Shelves Finish:** Source Laminate and Foundation Laminate
** Shelves are 11/16" thick

recycling/disposal unit basics (continued)

Recycling/Disposal Unit (JLFRU)
or Elevated Recycling/Disposal Unit (JLERU)

- Provides enclose storage space for Recycling/Waste Bins
- All Units include a Recycling/Waste Bin in each section
- Available in height of 42" only
- Available in depth of 18" or 24", both depths share the same Recycling/Waste Bins, 24" deep units are only needed to match 24" deep lockers layout
- Each door section is 12" wide and the Recycling/Disposal Unit is offered in dual (D), triple (T) and quadruple (Q) configurations
- A fixed shelf on each section is also avalaible with standard style only
- These units are **not** lockable
- Can be linked with other lockers of the same style and depth

standard style

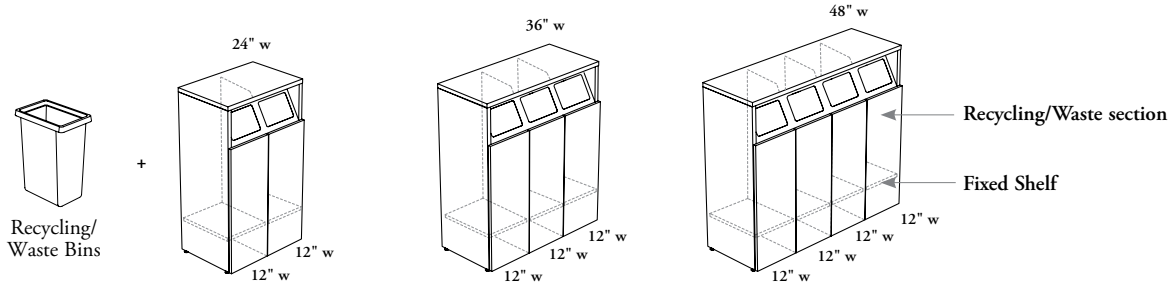

Two Recycling/Waste Bins and Two Fixed Shelves

Three Recycling/Waste Bins and Three Fixed Shelves

Four Recycling/Waste Bins and Four Fixed Shelves

elevated style

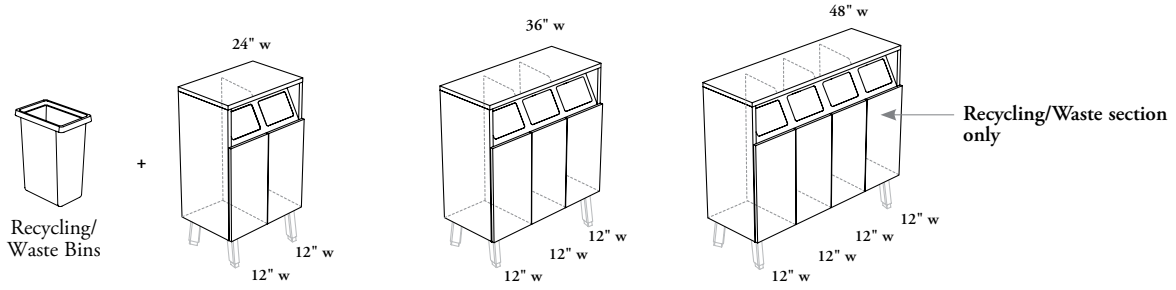

Two Recycling/Waste Bins

Three Recycling/Waste Bins

Four Recycling/Waste Bins

recycling/disposal unit basics (continued)

Recycling/Disposal Unit with Storage (JLFRS)

- Provides enclose storage space for Recycling/Waste Bins and Storage section at the end of the unit
- Have a total height of 42" depth of 18" and widths of 36" – 66" (6" increments)
- Each door of the waste section is 12" wide and the storage door can be 12" or 15"depending on the width configuration
- Unit includes a Recycling/Waste Bin and fixed shelf on each waste section and two adjustable shelves in the storage section
- Storage section comes with two adjustable shelves in 1 1/4" increments
- Three Storage Positions are available and determined from the user side:
  - Both Sides (B)
  - Left (L)
  - Right (R)
- Only the storage section can be lockable. Keyed Alike (K), Keyed Randomly (R) or No Lock (N) option can be specified
- **Cannot** be linked with lockers

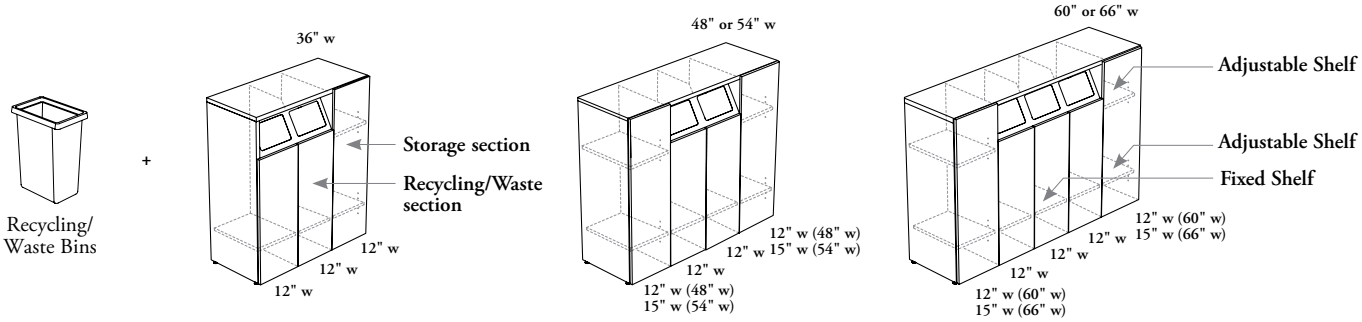

Left (L) or Right (R) (Shown)

One Fixed Shelf in each recycling/waste section and Two Adjustable Shelves in storage section

Both-Sides (B)

One Fixed Shelf in each recycling/waste section and Two Adjustable Shelves in each storage

planning with recycling/disposal units

The following outlines the door and opening heights for all Recycling/Disposal Units.

door openings

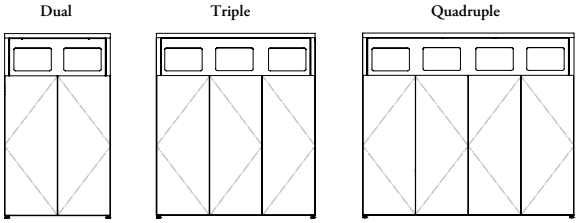

Recycling/Disposal Unit (JLFRU) or Elevated Recycling/Disposal Unit (JLERU)

- Triple Configuration (T) **cannot** be specified left or right

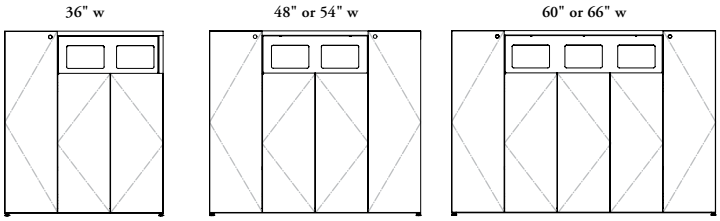

Recycling/Disposal Unit with Storage (JLFRS)

- Left (L) (Shown) or Right (R) Storage Position must be specified for 36" wide unit
- Both Sides (B) Storage Position must be specified for 48" to 66" wide unit

units doors and overall opening heights

recycling/disposal unit (JLFRU)

Interior compartment dimensions

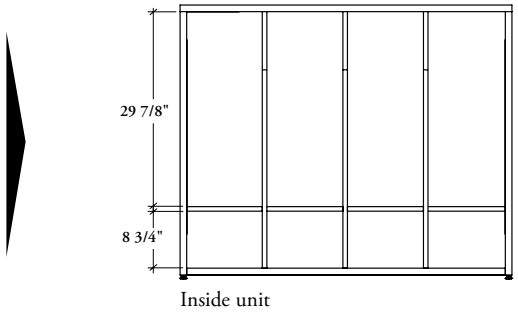

recycling/disposal unit with storage (JLFRS)

Interior compartment dimensions

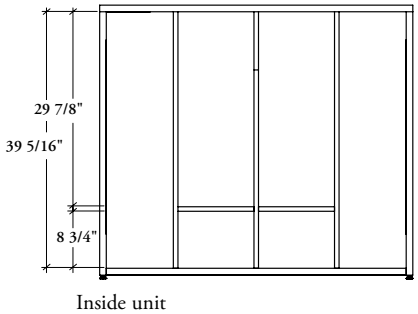

planning with recycling/disposal units (continued)

units doors and overall opening heights (continued)

elevated recycling/disposal unit (JLERU)

Interior compartment dimensions

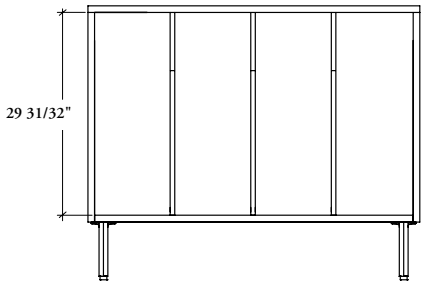

Inside unit

interior configurations

Recycling/Disposal Unit (JLFRU)

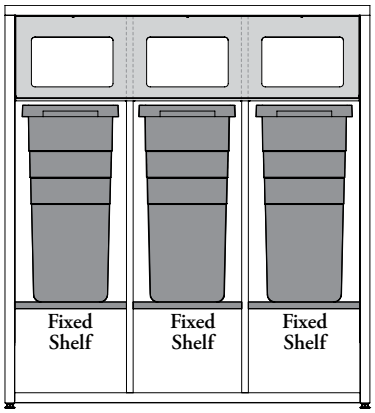

Shelf & Recycling/Waste Bin

- One Fixed Shelf and one Recycling/ Waste Bin in each section
- Shelves are positioned 8 3/4" from the bottom

Recycling/Disposal Unit with Storage (JLFRS)

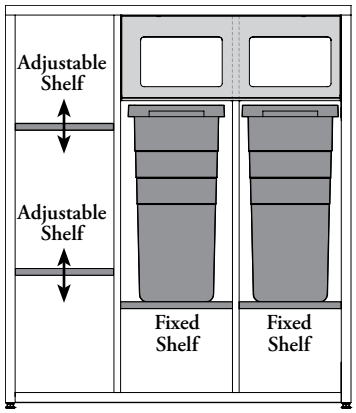

Shelves & Recycling/Waste Bin

- **Storage section:** Two Adjustable Shelves

  Recycling/Waste section: One Fixed Shelf and one Recycling/Waste Bin
- Storage section comes with holes at 1 1/4" intervales on the inside walls of side panels to allow for shelf adjustment
- Fixed Shelf is positioned 8 3/4" from the bottom

Elevated Recycling/Disposal Unit (JLERU)

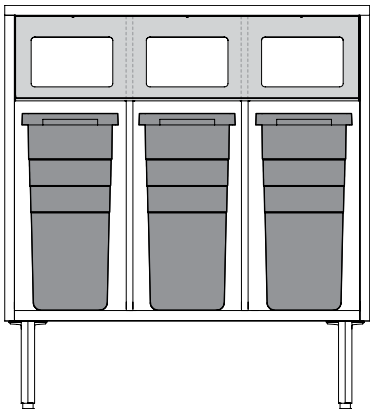

Recycling/Waste Bin

One Recycling/Waste Bin in each section

planning with recycling/disposal units (continued)

The following should be considered when planning with Expansion Cityline Recycling/Disposal Units.

Other special considerations must be taken when 18" deep Elevated Recycling/Disposal Units are specified. For more details, refer to page 698

Recycling/Disposal Units with Levelers can be used freestanding, they **do not** require any attachment to a structure or wall

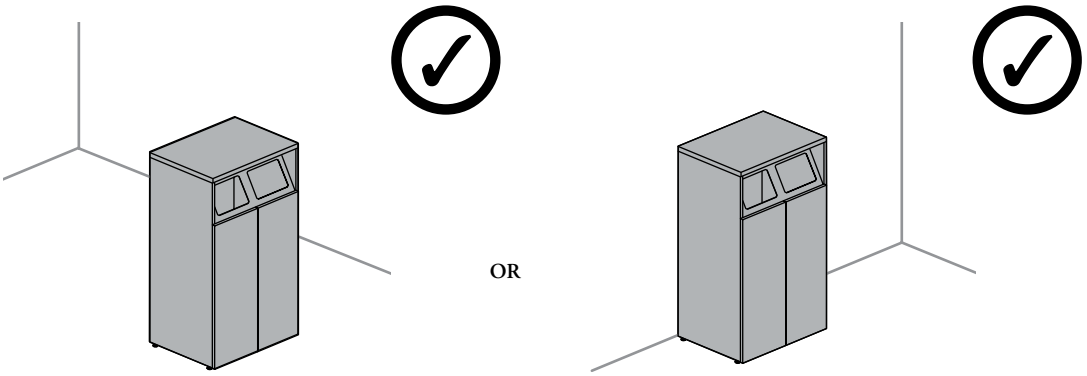

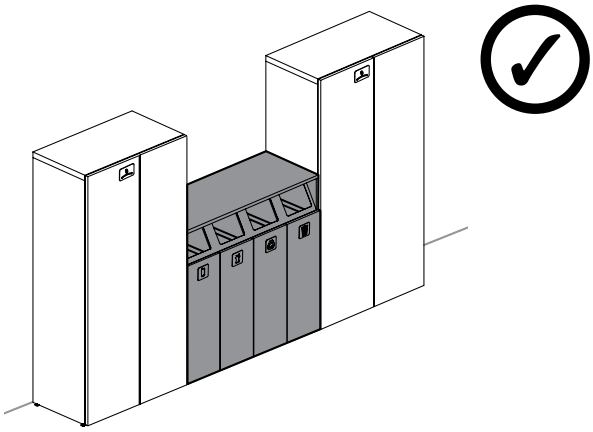

Can be used between two lockers of different datum and linked together

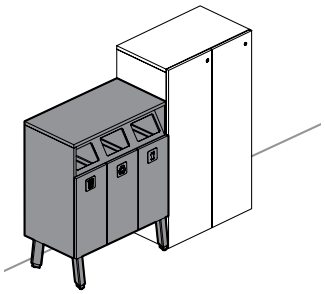

Elevated Recycling/Disposal Unit **cannot** be linked with Lockers on levelers

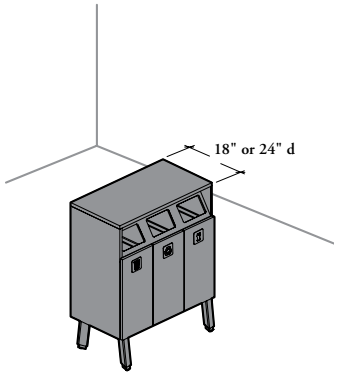

Elevated unit can be used alone without restrictions

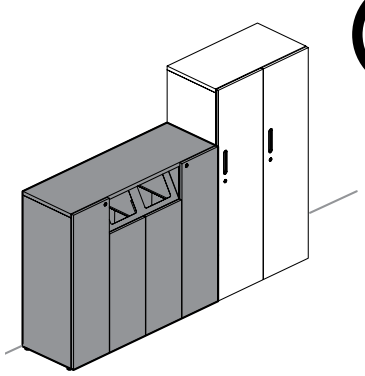

Recycling/Disposal Unit with Storage **cannot** be linked with other Lockers

planning with recycling/disposal units (continued)

Recycling/Disposal Unit with Storage can be used on- or off-module. Following are examples of on-module applications:

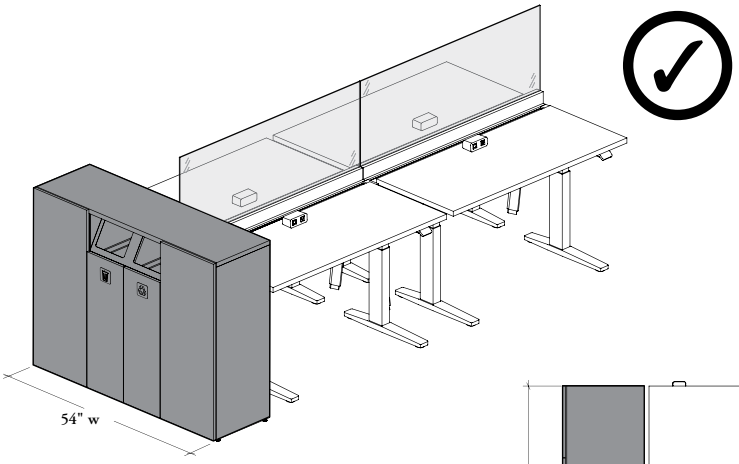

On-Module Application

When used in a workstation with 23" deep Height-Adjustable Table parallel to the beam, the 54" wide Recycling/Disposal Unit will be equal to the width of the workstation

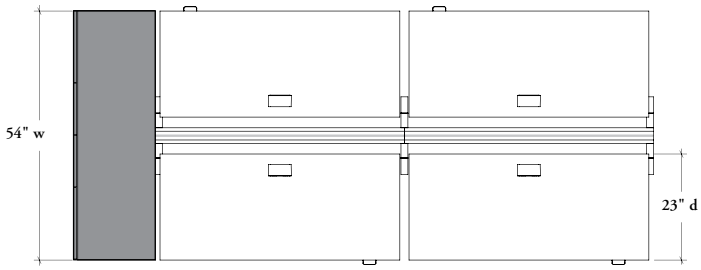

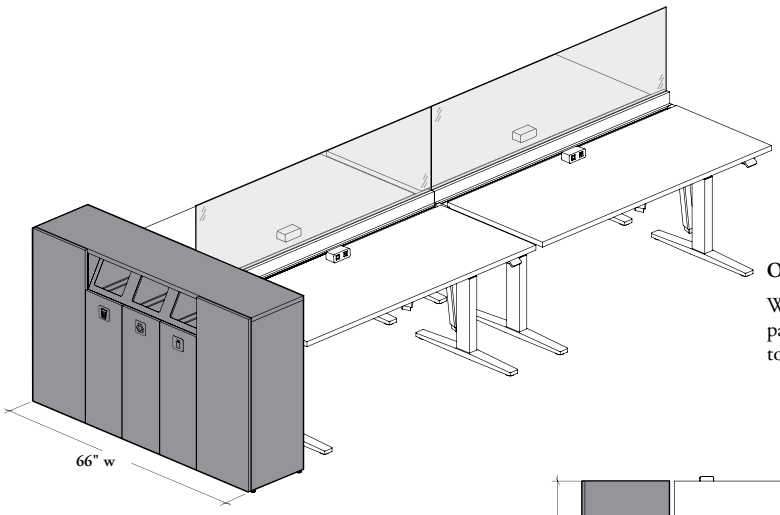

On-Module Application (continued)

When used in a workstation with 29" deep Height-Adjustable Table parallel to the beam, the 66" wide Recycling/Disposal Unit will be equal to the width of the workstation

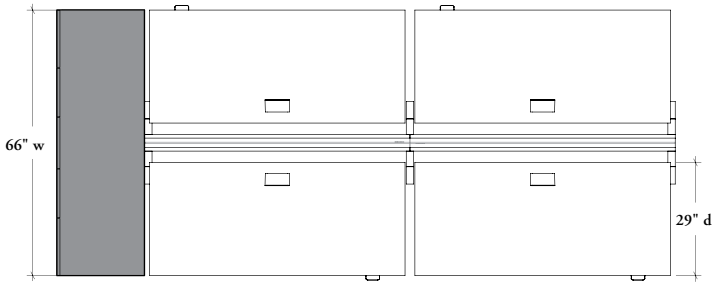

angled foot sharing applications – elevated lockers & recycling/disposal units

The following should be considered when planning Elevated Lockers, Common Elevated Lockers, Open Elevated Lockers or Recycling/Disposal Units with Angled Foot.

Angled Foot Kit for Elevated Locker (JLEFK)

- Come in pair
- Height: 10"
- Storage Depths: 18" or 24"
- Leveling range of 3" (-3/16", +2 13/16")

elevated lockers

- Lockers must be supported at each ends by an Angled Foot Kit (JLEFK). One kit is required at the junction of two units
- Lockers provide many foot positions to allow symmetrical and more equal distribution of foot at installation. Refer on page 709 for a better foot distribution
- End position is used at the end of a locker layout. In-line and shifted position are used at the junction of units (reconfigurable left side or right side)

Dual Lockers (Shown) or Common Lockers

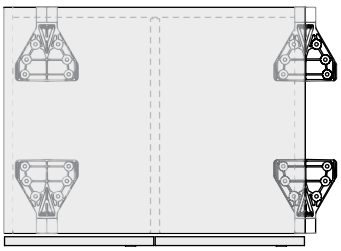

Triple Lockers

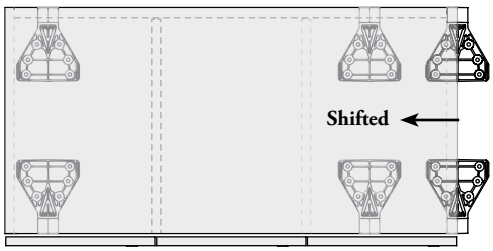

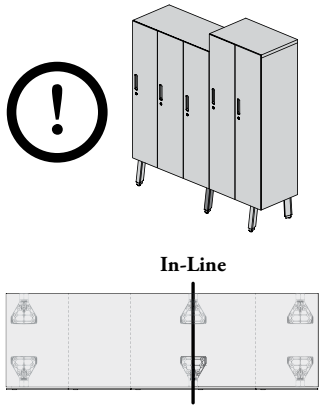

It is aesthetically recommended to use the **In-Line** position when connecting lockers of different heights

recycling/disposal units

Units have many foot positions to allow symmetrical and more equal distribution of foot between layout

Only end and in-line postions are available for Recycling/Disposal Units

Dual Units

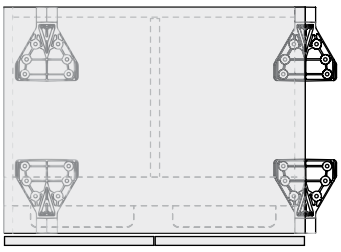

Triple Units

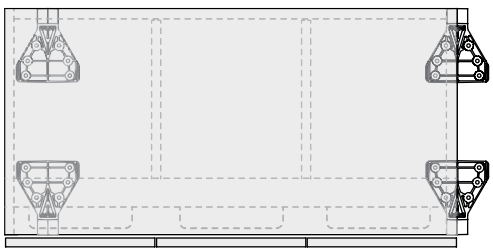

Quadruple Units

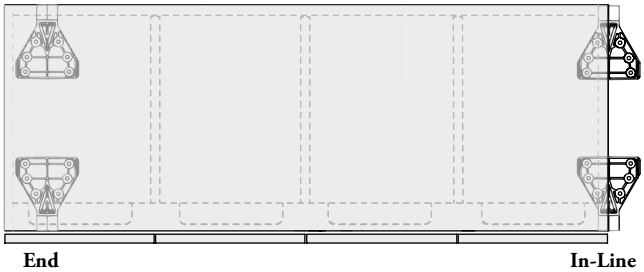

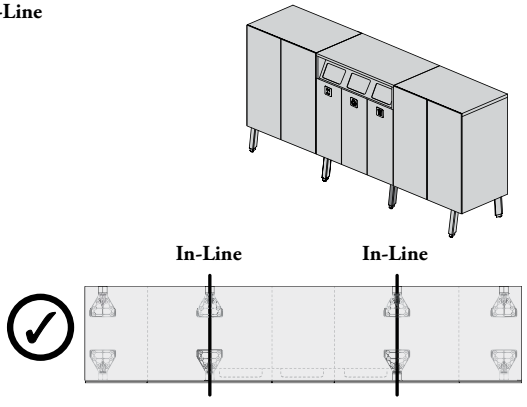

angled foot sharing applications – elevated lockers & recycling/disposal units (continued)

- It is recommended to use the minimum amount of locker units (favor triple ❸ over dual ❷ configurations) to create the required layout
- Distribute lockers in a symmetrical layout (example: 2-3-2 and **not** 2-2-3)
- When mixing dual and triple lockers, dual lockers should be placed in the center for a better foot distribution (example: 10 **sections side-to-side** = 3-2-2-3 and not 2-3-3-2)

angled foot sharing positions – dual & triple elevated lockers

(recommendations for optimal aesthetic and cost efficiency)

Lockers for 2 sections – End / End

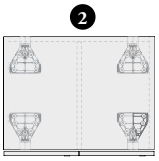

Lockers for 3 sections – End / End

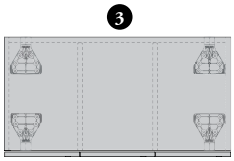

Lockers for 4 sections – End / In-Line / End

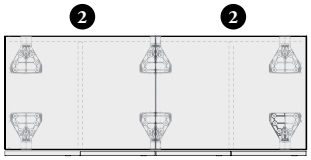

Lockers for 5 sections – End / Shifted / End

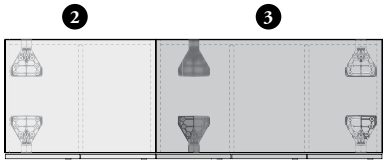

Lockers for 6 sections – End / In-Line / End

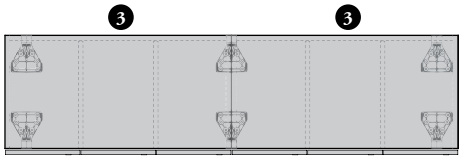

Lockers for 7 sections – End / In-Line / In-Line / End

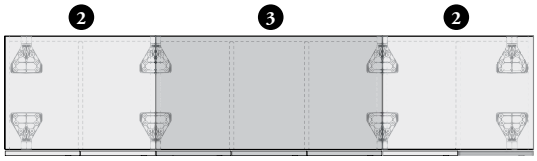

Lockers for 8 sections – End / Shifted / Shifted / End

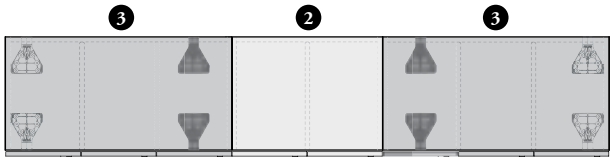

Shifted Foot

Lockers for 9 sections – End / In-Line / In-Line / End

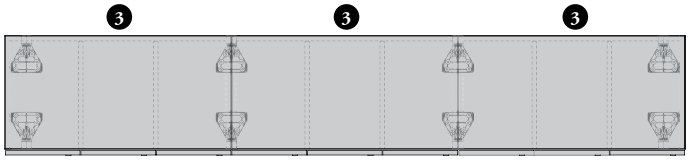

Lockers for 10 sections – End / Shifted / In-Line / Shifted / End

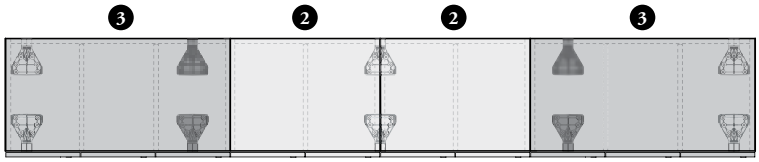

angled foot sharing applications – elevated lockers & recycling/disposal units (continued)

angled foot sharing positions – dual & triple elevated lockers (continued)

Lockers for 11 sections – End / In-Line / Shifted / In-Line / End

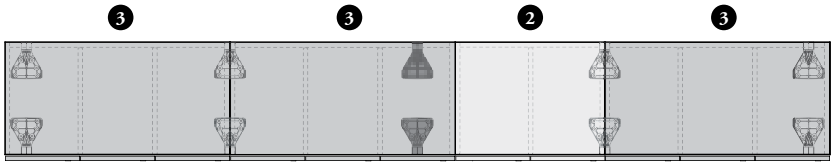

Lockers for 12 sections – End / In-Line / In-Line / In-Line / End

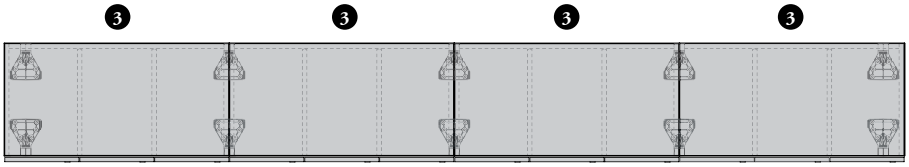

Lockers for 13 sections – End / Shifted / In-Line / In-Line / Shifted / End

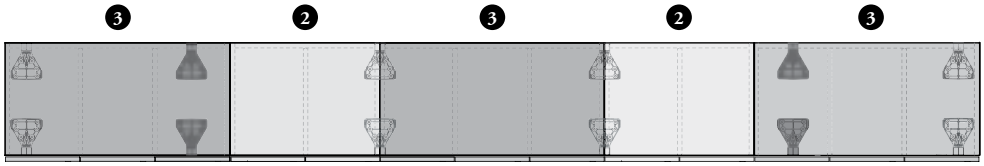

Lockers for 14 sections – End / In-Line / Shifted / Shifted / In-Line / End

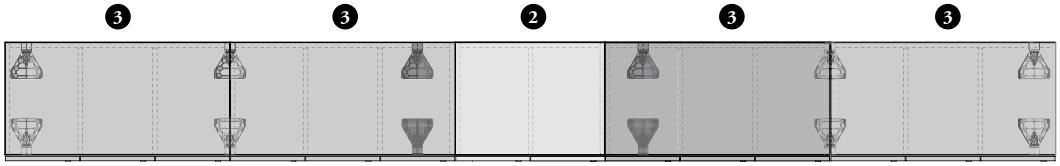

Lockers for 15 sections – End / In-Line / In-Line / In-Line / In-Line / End

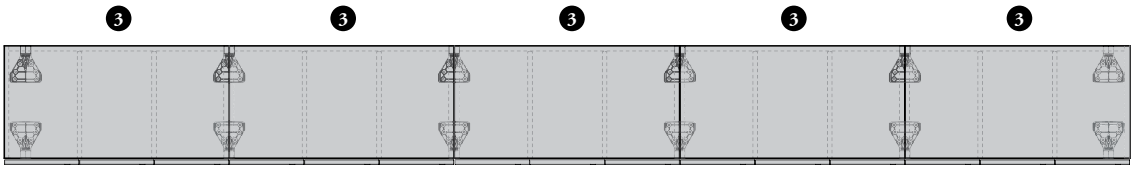

Shifted Foot

digital lock details

Lockers accept a locking technology, offering a digital numeric keypad lock as standard. Specific client security needs can be fulfilled from an extensive range of products supported by Teknion suppliers.

versa mini 6th generation

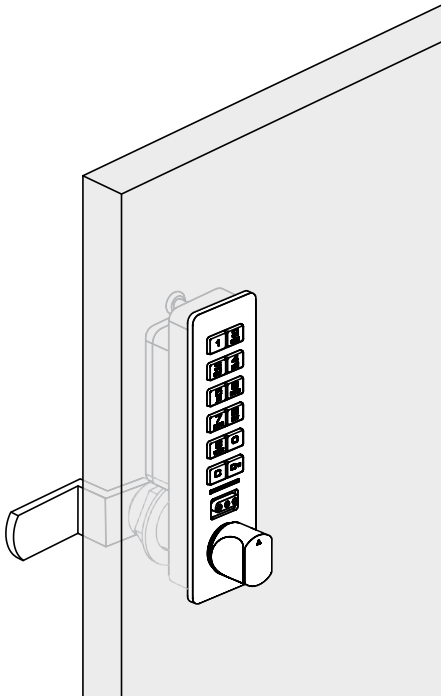

Product Details

- Alpha Numeric Keypad Operation
- User Code may contain from 4 to 7 digits
- Each lock may be assigned up to 20 user codes and/or user keys
- Available recess mount for a flush look
- Vertical orientation with pull on bottom (pull also act as lock)
- Finished in Brushed Nickel
- **Cannot** be used with glass door
- The Digital Keys (JLKEE) are required and must be specified separately

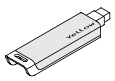

Programming Key (P)

Manager Key (M)

User Key (U)

- Access to battery is enable from the interior of the locker
- Two AAA Disposal Batteries are included, rechargeable batteries can also be used. It is **not** necessary to unistall the lock for batteries replacement

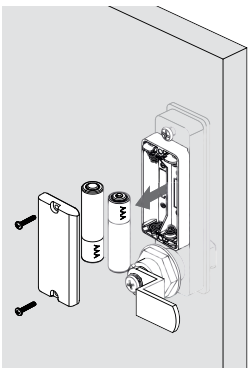

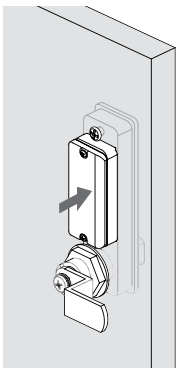

digital lock key basics

The Digital Lock specified on the Lockers or Suspended Personal Storage – Door (JNAUE) are provided by Digilock. NOTE that no Programming, Manager and/or User Key will be sent with the Lockers when specified with the Digital Lock option.

- Cityline 6th Generation Digital Keys (JLKEE) are the only keys compatible with Cityline products. They are also compatible work 5th Generation Versa Mini Lock in other product lines
- For the **Digilock** products, keys are ordered separately since there is no requirement for every digital lock to have its own individual key
- Manager (M) and Programming (P) keys include four AA batteries that can be changed easily
- Three key types are available:

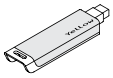

Programming Key (P)

- Each lock can be paired with one programming key
- Required for initial programming of the lock and Manager Keys
- One programming key per site is recommended
- It has the capability to override access, operate and set the functionality of the lock
- Provides external power when battery is dead
- Can be used for lock maintenance (batteries change) or management inspection
- Each Programming Key is programmed by **Digilock**, therefore they will require the related **Teknion** order number to program the key to the existing locks. Contact the **Teknion** Customer Service team. This will allow **Digilock** to program the new keys for the locks that are on order or already on site.

Manager Key (M)

- Required for programming and managing of user codes
- Up to six Manager Keys can be programmed to each lock
- Overrides user access
- Provides external power
- Can be used for lock maintenance (batteries change) or management inspection
- The Manager Key is programmed by the Programming Key and **not** directly by **Digilock**. Therefore, additional Manager Keys can be ordered after initial set up.

User Key (U)

- Optional key that allows access to the storage product without using or bypassing the keypad, ideal for ADA solution
- This key can be ordered later without being programmed to the existing locks with the assistance of a Manager Key

NOTE: the **Digilock** is **not** manufactured by **Teknion** and therefore it is **not** covered by the **Teknion** Warranty. **Digilock** offers a two year warranty for the digital lock products.

For all further inquiries related to the Programming, Manager and User Key products, refer to **Digilock** directly for assistance. The **Digilock** can also provide the related documents. Contact **Digilock** sales support, support@digilock.com or call 707-766-6000.

pull, standard lock & digital lock positions – lockers & recycling/disposal units

- The pull & lock positions may vary depending on locker size choosen
- These positions are the same for the Standard and Elevated Lockers only
- Left (L) or Right (R) Door Swing Orientation can be specified, the Right Door Swing is showned below

standard lock positions for lockers

- Available with Metal (M) or Solid (S) Front Style. Also available with Lockers – Full Glass Doors (JLFFG and JLEFG)
- **Not** available with Common Lockers (JLFSD, JLFSG, JLESD or JLESG)

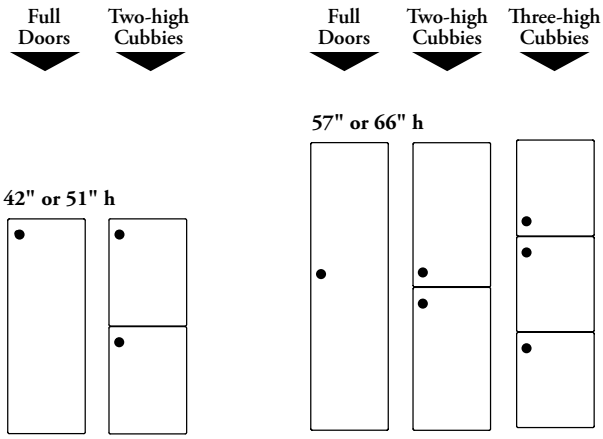

pull with standard lock positions for lockers

- Available with Metal with Pull (N) or Solid with Pull (T) Front Style only
- **Not** available with Lockers with Glass Doors (JLFSG, JLFFG, JLEFG or JLESG)

* Common Lockers (JLFSD or JLESD) come with pull only, **no lock included**

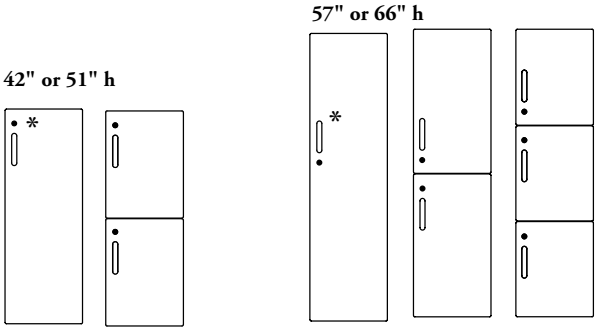

digital lock positions for lockers

- Available with Metal with Digital Lock (O) or Solid with Digital Lock (U) Front Style only
- **Not** available with:
  – All Common Lockers (JLFSD, JLFSG, JLESD or JLESG)
  – Lockers with Glass Doors (JLFFG or JLEFG)

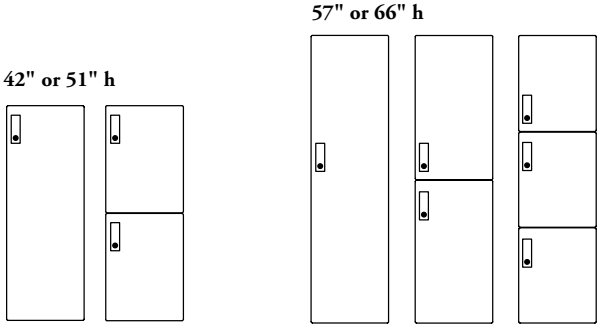

pull, standard lock & digital lock positions – lockers & recycling disposal units (continued)

- Pulls & Digital Locks are **not** available with Recycling/Disposal Units
- These positions are the same for the Standard or Elevated Style

standard lock positions for recycling/disposal units

- Available with Metal (M) or Solid (S) Front Style only
- Available with Recycling/Disposal Unit with Storage (JLFRS) only
- Only storage section can be lockable

36" w

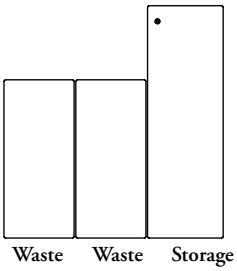

48" to 66" w

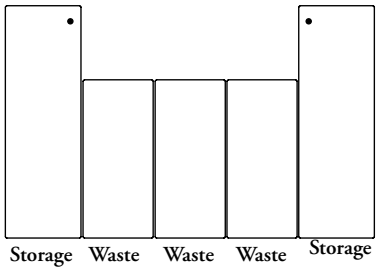

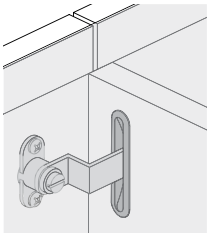

Locking Cup

- When Lockers and Recycling/Disposal Unit with Storage (JLFRS) are specified with standard or digital locks, the cam is inserted into a locking cup that sits flush with the storage side. This locking characteristic offer clean aesthetic and prevent damage of personal items
- Finished in Soft Gris coordinate

lock chart – lockers & recycling/disposal units

- If specified, all closed storage products come with a lock and key set and can be keyed alike or randomly. A Key Chart must accompagny every order, otherwise orders will be shipped keyed randomly
- Available with Metal (M), Solid (S) or Glass Front Style only

	number of locks		number of locks		number of locks
Door Swing – Left Dual Triple 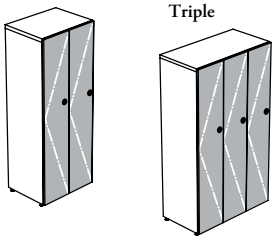 Door Swing – Right 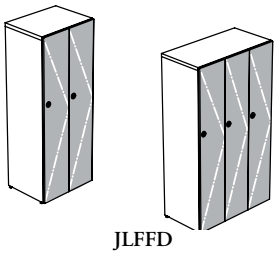 JLFFD Door Swing – Left Dual Triple 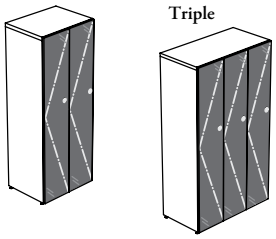 Door Swing – Right 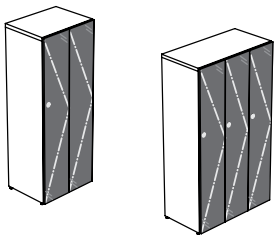 JLFFG	2 x (dual) or 3 x (triple)	Door Swing – Left Dual Triple 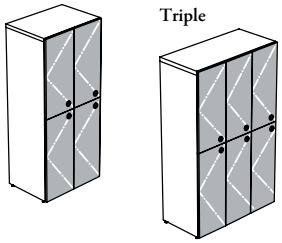 Door Swing – Right 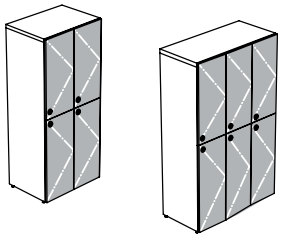 JLFC2	4 x (dual) or 6 x (triple)	Door Swing – Left Dual Triple 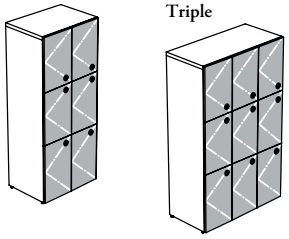 Door Swing – Right 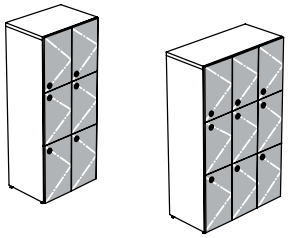 JLFC3	6 x (dual) or 9 x (triple)
		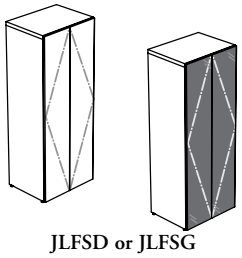 JLFSD or JLFSG	0 x	36" w 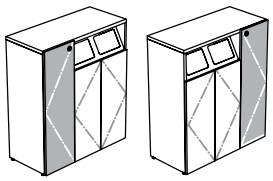 JLFRS	1 x
		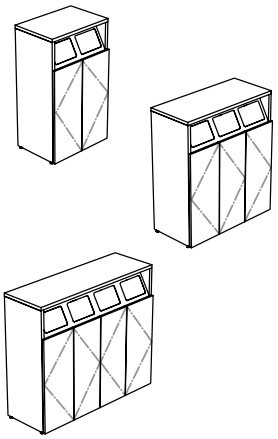 JLFRU	0 x	48" or 54" w 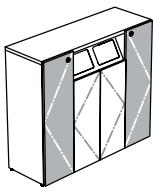 60" or 66" w 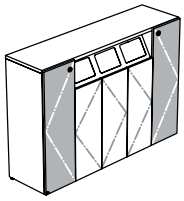 JLFRS	2 x

Lockable Single Door Not Lockable

lock chart – lockers & recycling/disposal units (continued)

	number of locks
Door Swing – Left Dual 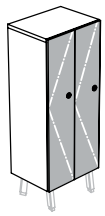 Triple 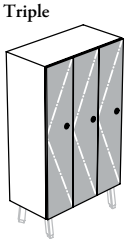 Door Swing – Right 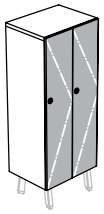 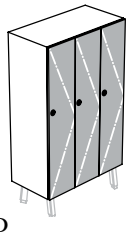 JLEFD Door Swing – Left Dual 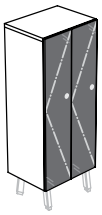 Triple 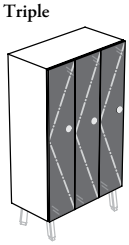 Door Swing – Right 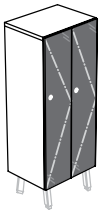 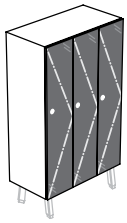 JLEFG	2 x (dual) or 3 x (triple)
Door Swing – Left Dual 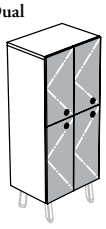 Triple 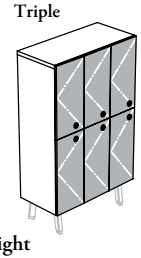 Door Swing – Right 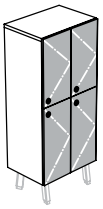 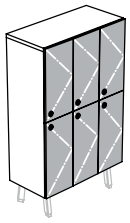 JLEC2	4 x (dual) or 6 x (triple)
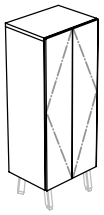 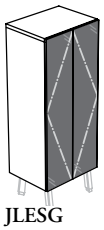 JLESD or JLESG	0 x
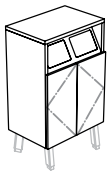 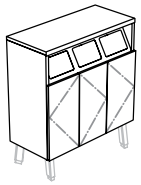 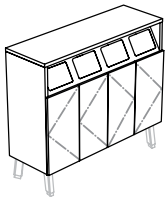 JLERU	0 x
Door Swing – Left Dual 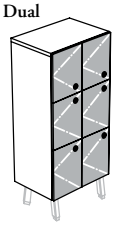 Triple 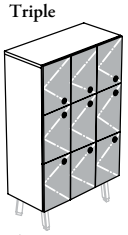 Door Swing – Right 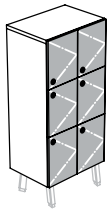 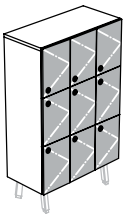 JLEC3	6 x (dual) or 9 x (triple)

Lockable Single Door Not Lockable

grain direction – lockers & recycling/disposal units

Grain direction is important when planning with storage. The following examples demonstrate this. Laminates do not have one-way grain direction but rather a bi-directional grain pattern.

- Grain/patterns are **not** "centered" on storage unit
- Includes Source or Foundation Laminate (Standard, Finegrain and Straightgrain)
- Door grain direction will always be vertical
- Door front grain direction will vary depending on product and finish selected
- Available for Standard and Elevated Styles

dual or triple lockers

Cathedral Grain Pattern:

Source Laminate
• 3A – 3B – 3C – 3D – 3E – 3L – 3M – 3X – XQ – XR

Foundation Laminate
• 2A – 2B – 2C – 2D – 2E – 2L – 2M – 2X – RQ – YR

For colors listed above, the Cathedral Grain Pattern for door fronts will be book-matched

Front

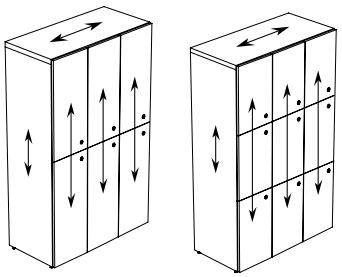

Back

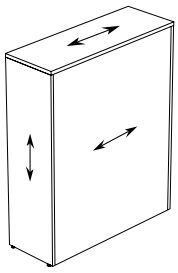

lockers & recycling/disposal units

Straight Grain Pattern:

Source Laminate
• 3F – 3J – 3K – 3N – 3P – XJ – XK

Foundation Laminate
• 2F – 2J – 2K – 2N – 2P – JG – RN

Flintwood
• FC – FD – FM – FN – FX – NR – NT – VA – VB – VZ – 5N – 5P – 5Q – 5R – 5S – 5T – 5V – 5W – 5Z

For colors listed above, the Straight Grain Pattern for door fronts will be vertical

Front

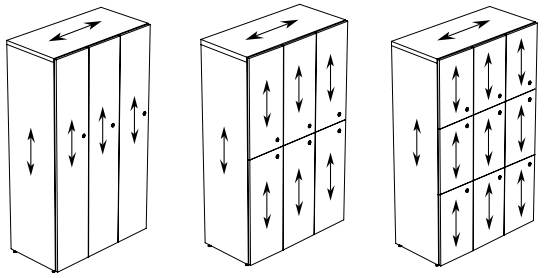

Open **Back**

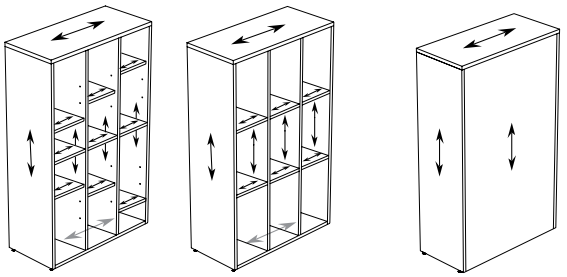

Front **Back**

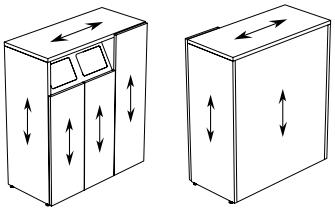

Laminate Grains ⟷ = Grain Direction =

number & symbol identification basics

Metal plate identifications for Lockers and Recycling/Disposal Units.

- Each Locker compartment can be identified by a number or Recycling/Disposal Units by a symbol. Common Lockers can also be identified by a Common Locker Symbol
- Solid (S) or metal (M) door fronts come with pre-drill holes when Number Ready (R) is specified on Lockers or when Symbol Ready (S) is specified on Common Locker or Recycling/Disposal Units
- **Cannot** be specified on Glass Door Fronts
- Recycling/Disposal Units Symbols **cannot** be used with Lockers and vice versa

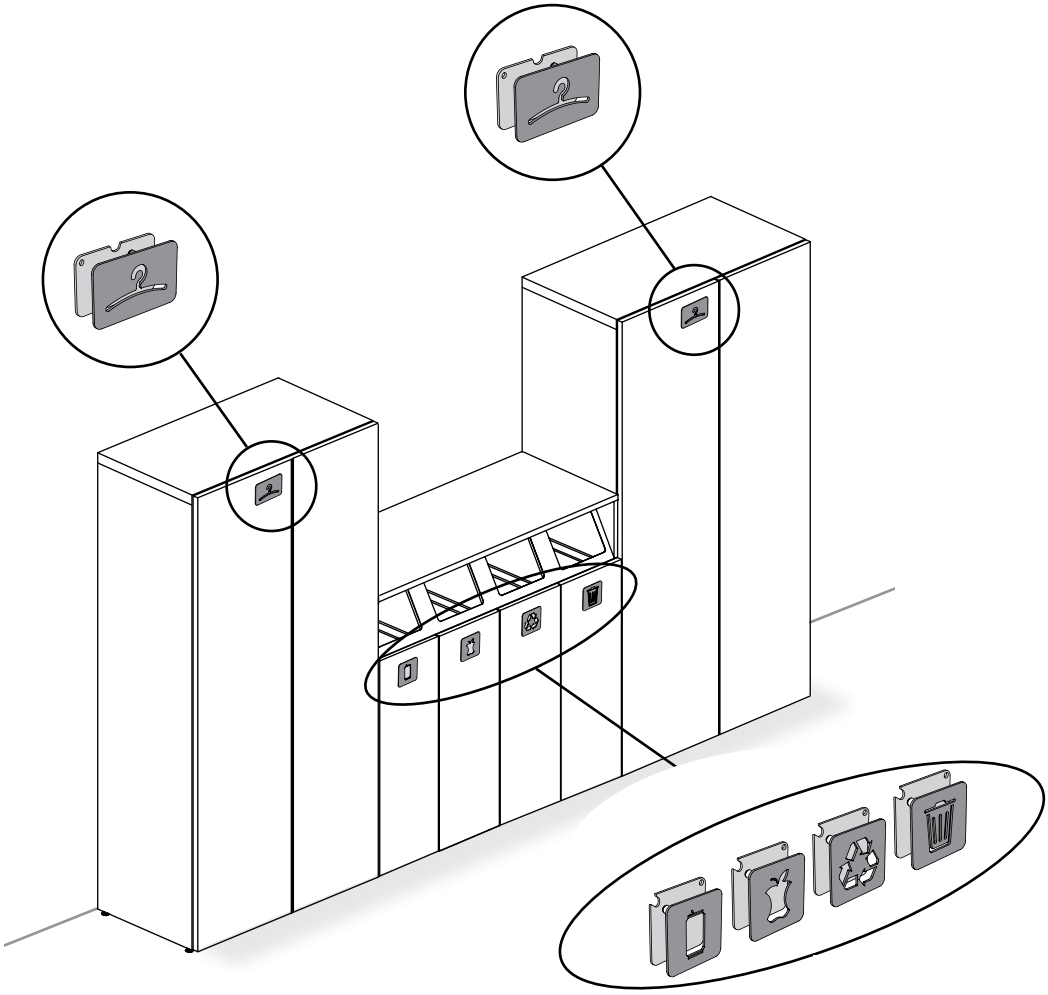

Finishes

Front Plate Finishes: Foundation, Mica and Accent
Back Plate Finishes (If Applicable): Foundation, Mica and Accent

reconfigurable

Numbers or Symbols Metal Plate are mechanically installed on door and can easily be reconfigured without tools

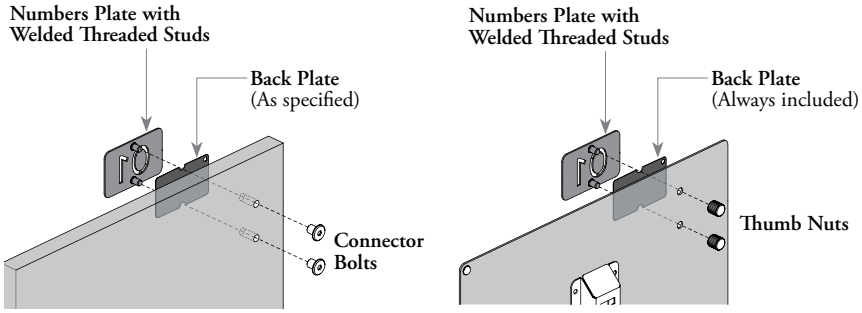

Solid Door (S)

Metal Door (M)

number & symbol identification basics (continued)

Locker Number (JLANN)

- Locker Number is always positioned at the top of door on door swing side
- Can be specified with Standard or Elevated Lockers only
- Two configurations are offered:
  - – One Plate (O) : 01 to 99
  - – Set of 10 Plates (S): 0110 (From 01 to 10) to 8190 (From 81 to 90)
- Can be specified on Metal (M) or Solid (S) Door Styles
- None (N) or With Back Plate configuration (W) can also be specified

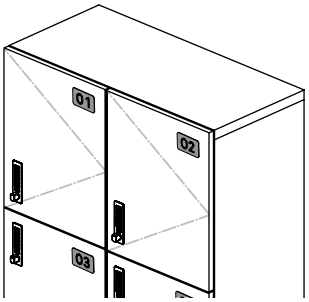

Common Locker Symbol (JLASS)

- Common Locker Symbol is always positioned at the top right of left door
- Can be specified with Standard or Elevated Common Lockers only
- Comes with Hanger Symbol (H)
- Can be specified on Metal (M) or Solid (S) Door Styles
- None (N) or With Back Plate configuration (W) can also be specified

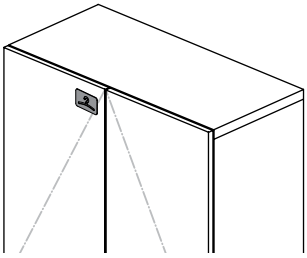

Aluminum Can (A)

Compostable (C)

Refundable Containers (D)

Glass (G)

Metal (M)

Paper (P)

Recycling (R)

Waste (W)

Recycling/Disposal Unit Symbol (JLASR)

- Recycling/Disposal Unit Symbols are always positioned at the center top of door
- Can be specified with Standard or Elevated Recycling/Disposal Units only
- Can be specified on Metal (M) or Solid (S) Door Styles
- None (N) or With Back Plate configuration (W) can also be specified

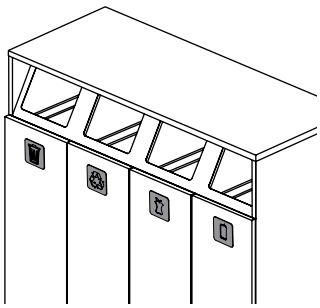

planning with number & symbol identifications

front & back plate applications

Many ways to specify the Locker Numbering, Common Locker and Recycling/Disposal Unit identification

Metal Door

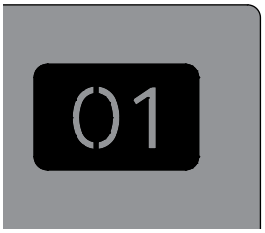

Solid Door

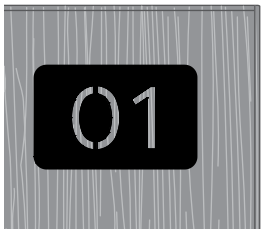

Highlighted Plate

- The plate can be highlighted on the door to create a stronger visual statement, using or **not** a back plate to create an accent on the number
- To create a see-through look with metal, the back plate must be specified with the same color than the door
- With solid doors, numbers can be specified without back plate to create a true see-through look

Metal Door

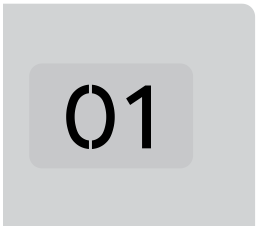

Highlighted Numbers

To create a highlighted numbers the front plate can be specified with the same or similar color than the door, and the back plate can be specified to the desired highlight color

Metal Door

Subtle Numbers

To create more subtle numbers, the front and the back plates can be specified with the same or similar color than the door

numbered plate positions

Numbers can be installed following different patterns, that choice is made at the installation

Linear

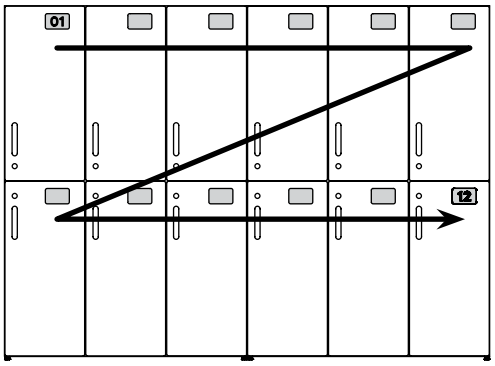

Linear – from Top to Bottom

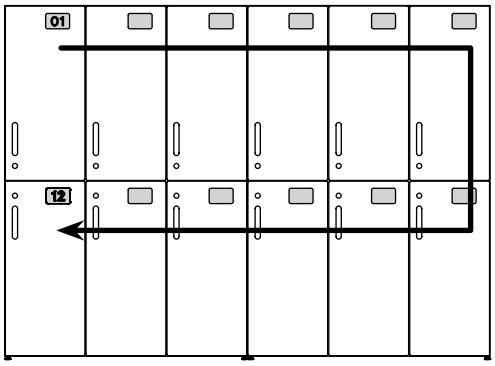

Circular – from Top to Bottom

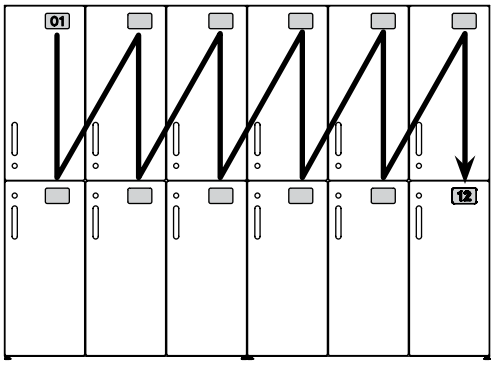

Alternately – Top to Bottom

accessories

accessories

UNDERSTANDING ACCESSORIES 726

SUSPENDED PERSONAL STORAGE BASICS 727

PLANNING WITH SUSPENDED PERSONAL STORAGE 730

DRAWER MODULES, TRAY MODULE & UTILITY BOX BASICS . . . 732

PLANNING WITH DRAWER & TRAY MODULES 733

METAL SCREEN ACCESSORIES BASICS 734

PLANNING WITH METAL SCREEN ACCESSORIES 735

FREESTANDING PLANTER BOX & PLANTER LINER BASICS 737

PLANNING WITH PLANTER BOX & PLANTER LINERS 738

LINEAR LED LIGHT SUPPORT BASICS 740

TABLE COMPANION MARKER KIT BASICS 741

BOX DRAWER ORGANIZER BASICS 742

accessories (continued)

FILE DRAWER ORGANIZER BASICS 743

PLANNING WITH FILE DRAWER ORGANIZERS 744

BOOT TRAY 745

SEAT PAD OR SEAT CUSHION BASICS 746

PLANNING WITH SEAT PAD OR SEAT CUSHION 747

BEAM-MOUNTED SEAT PAD & ACCESSORIES BASICS 749

PLANNING WITH BEAM-MOUNTED SEAT PAD & ACCESSORIES 750

UNDER BEAM- OR WORKSURFACE-MOUNTED HOOK BASICS 753

PLANNING WITH UNDER BEAM- OR WORKSURFACE-MOUNTED HOOK. 754

DRY-ERASE KIT & RARE EARTH MAGNET KIT BASICS 755

understanding accessories

A variety of accessories are available to enhance the functionality in Expansion Cityline workstations.

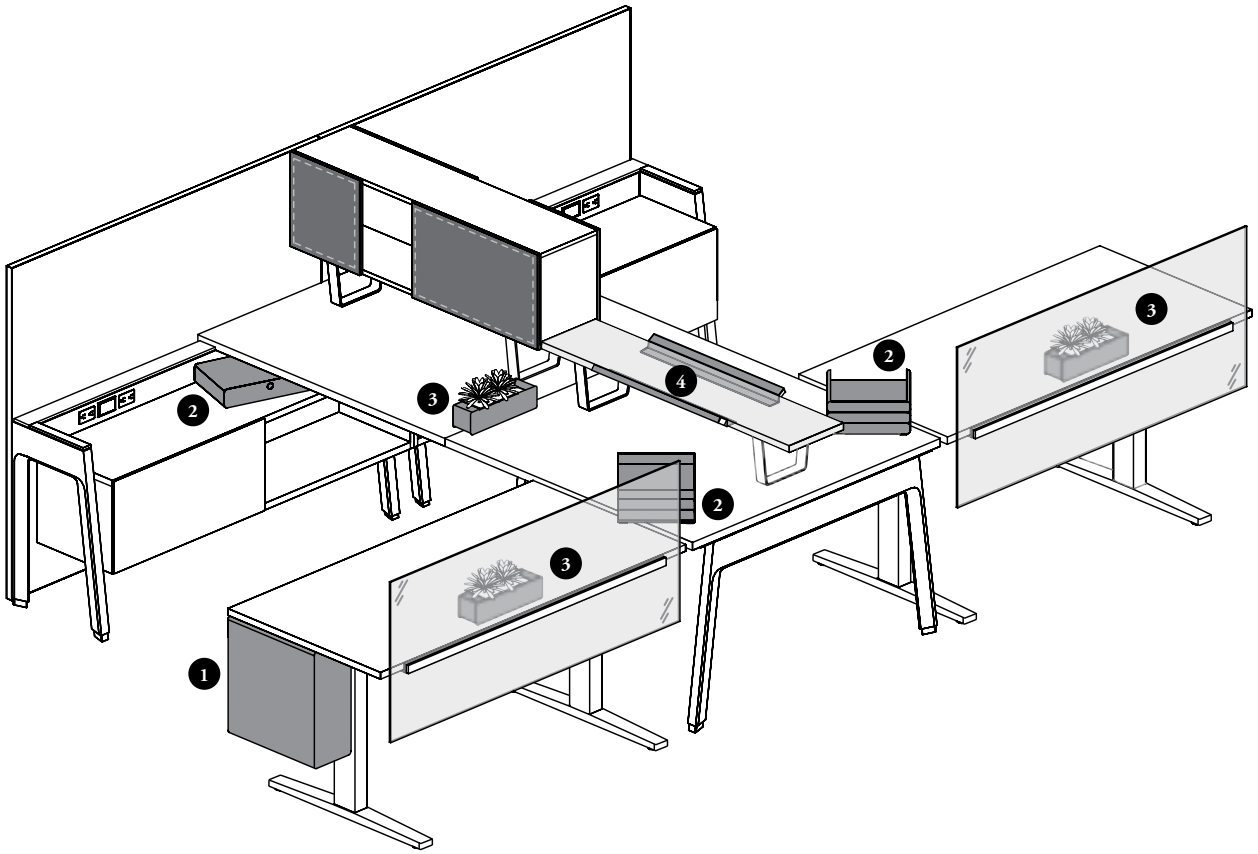

1. **Suspended Personal Storage –** Provide casual suspended storage for personal items, books, bags and when specified, USB charging capacity
2. **Drawer Modules & Tray Module –** Provide personal storage in various positions within the workstation to accommodate the needs of the modern workstation user

   Metal Screen Accessories – Provide storage for a variety of common office accessories such as pencil, paper, earphone and also offer a small writable surface for notes. Can be used in conjunction with many products to personalize a workstation and is user reconfigurable

   Utility Box – Provide casual personal storage in various positions within workstation
3. **Freestanding Planter Box & Planter Liner –** Promotes biophilia in workstation by providing integrated solutions for worksurface, shelf and storage top
4. **Linear LED Light Support –** Provide support for Linear LED Light under an Elevated Desk Shelf (JNMES)

   Box or File Drawer Organizers – Are organizational tools that can be used inside file drawers to provide personal storage space for smaller items

   Seat Pad – Felt or Seat Cushion – Fabric – Provides casual guest seating on top of a Credenza and/or Pedestal

   Beam-Mounted Seat Pad – Provides casual guest seating on top of structural beam. Most commonly used in casual applications

   Beam-Mounted Accessories – Are organizational tools that can be placed anywhere along the structural beam

   Hook – Mounted under a worksurface or anywhere along the structural beam to hang on or two bags

suspended personal storage basics

The Supended Personal Storage offers casual suspended storage for personal items, books and bags and when specified, USB charging capacity. Cannot be used freestanding.

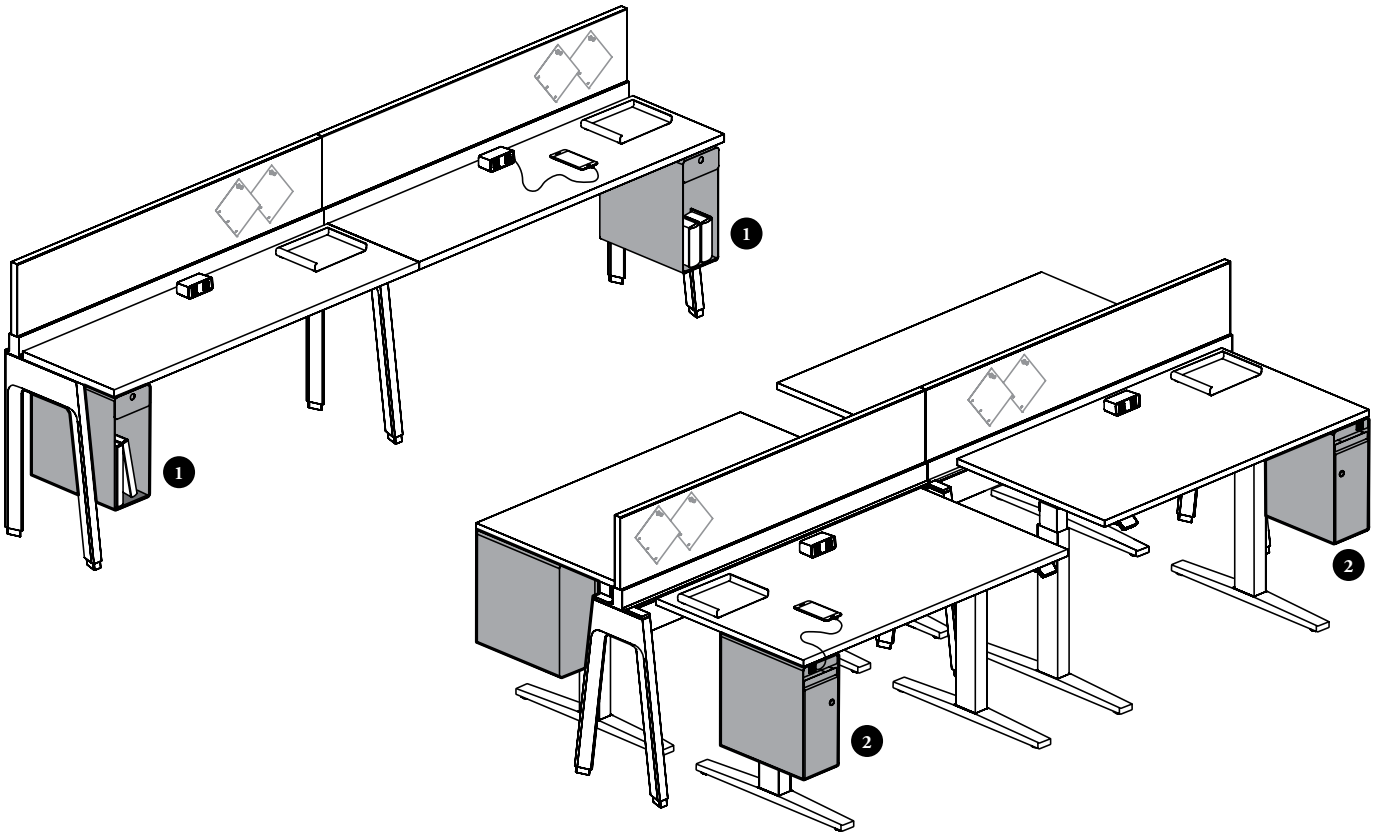

Finishes

Drawer or Door Front Finishes: Foundation, Mica and Accent
Case Finishes: Foundation, Mica and Accent
Utility Box Finishes (if applicable): Foundation, Mica and Accent
Drawer Liner Finish: Carbon (RB11)
Bottom Liner Finish: Loft
USB Module: Platinum Grey Coordinate (YN)

suspended personal storage basics (continued)

- Stores small personal items
- Full depth access bottom opening for bag drop, binders and more
- Feature a finger hole on drawer and door for opening

1

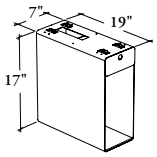

Standard (S)

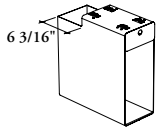

Height-Adjustable Table Frame Recessed (N)

Supended Personal Storage – Open/Drawer (JNAUOD)

- Upper drawer is available in pocket size only
- Drawer is **not** lockable

Pocket Drawer Size

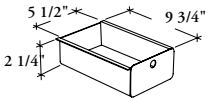

Standard or Height-Adjustable Table Frame Recessed Integrated Pocket Drawer

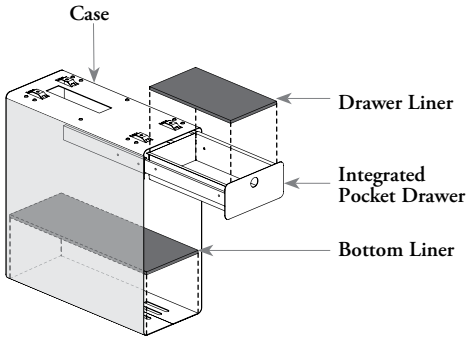

2

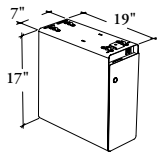

Standard (S)

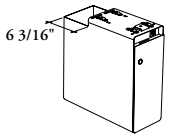

Height-Adjustable Table Frame Recessed (N)

Supended Personal Storage – Door (JNAUE)

- Upper is available with USB module and Utility Box (P) (optional) and metal shelf
- USB module is compatible for charging earphones, tablets, and USB-powered devices
- Three integrated USB outlet types are available:
  - **With USB A+A (A)**
    (outlet have a capacities of 4A of Charging Power and 5 Volt direct current and a 144" long cable)
  - **With USB A+C (B)**
    (outlet have a capacities of 4A of Charging Power and 5 Volt direct current and a 72" long cable)
  - **No USB (N)**
    (provides no openings for futur retrofit)
- When USB outlet types (A or B) is specified, clips to manage the USB module cable under the worksurface are included
- Use upper edge of the door for opening
- An opening allows the user to route a USB cable from USB charging module to the shelf, to charge a phone, even when the door is locked. (with or without optional Utility Box). Can be oriented at Left (L) or Right (R) (Shown)
- Two Front Styles are available: Metal (D) or Metal with Digital Lock (O)
- When Metal Front (D) is specified, the Keyed Alike (K), Keyed Randomly (R) or No Lock (N) can be specified, but if Metal with Digital Lock (O) is specified, only Digital Lock Assigned (A) is available

USB Outlet Types

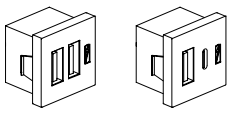

USB A+A (A)

USB A+C (B)

Utility Box Size

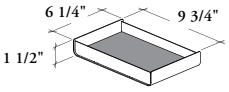

Standard or Height-Adjustable Table Frame Recessed Utility Box (optional) (JNAUB)

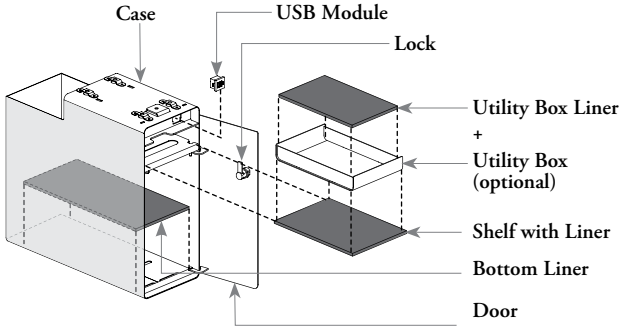

Lock Chart & USB Module Positions

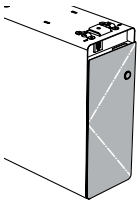

Left (L)

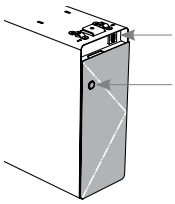

Right (R)

Lock Styles

Standard Locks (K, R or N)

Digital Lock Assigned

For more details on Digital Lock, refer on page 712

suspended personal storage basics (continued)

Supended Personal Storage – Door (JNAUE) (continued)

When optional with USB Module is specified:

- Use included Cable Management Clips to manage the wire under the worksurface
- Cable length must be considered to connect a USB module directly to a wall outlet

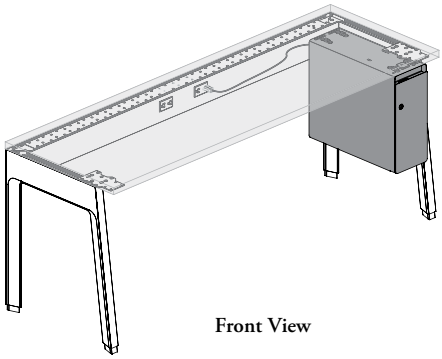

Front View

Standard (S)

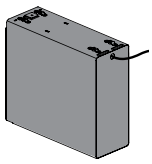

Back View

Cable will exit the storage by a hole at the back

- When used under fixed worksurface, it is recommended to plug the module into the beam

Height-Adjustable Table Frame Recessed (N)

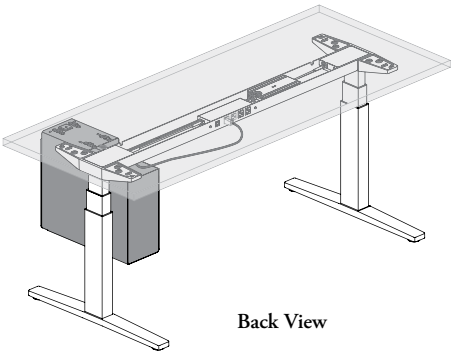

Back View

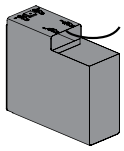

Back View

Cable will exit by the cut-out made for Height-Adjustable Table Frame

- When used under a hiSpace or Navigate Height-Adjustable Table, it is recommended to plug the module into the integrated Powerbar under the worksurface

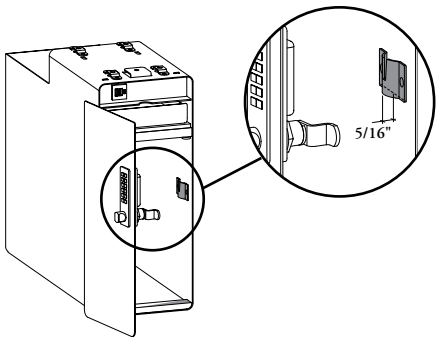

Inside Clearance

- When specified with Digital Locks, the cam is inserted into a lock stopper that protube of 5/16" from the storage side

planning with suspended personal storage

The following should be considered when planning with Suspended Personal Storage.

- Must be installed flush with front facing edge of worksurface
- Are offered in two mounting styles: Standard (S) or Height-Adjustable Table Frame Recessed (N)

standard (S)

Rectangular Worksurface

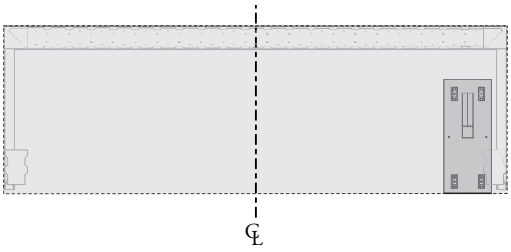

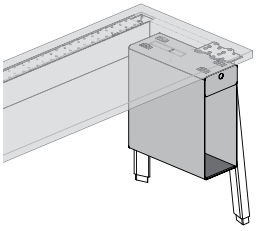

- Can be mounted underneath Rectangular Worksurfaces on the internal side of structural or freestanding leg
- The mounting plate of those legs prevents the Suspended Personal Storage from leaning against the leg

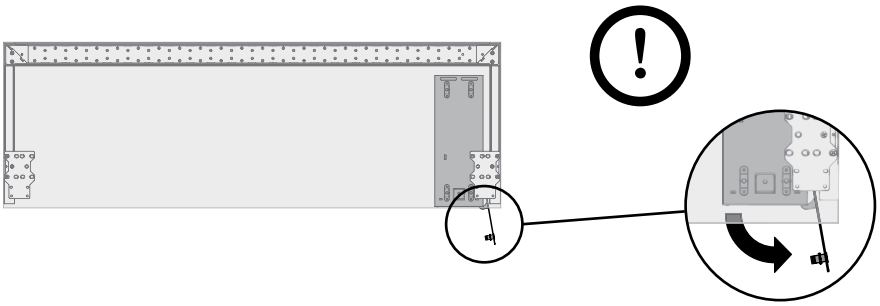

- The Suspended Personal Storage – Door (JNAUED) **cannot** lean against a structural leg. 1" clearance must be kept for opening the door

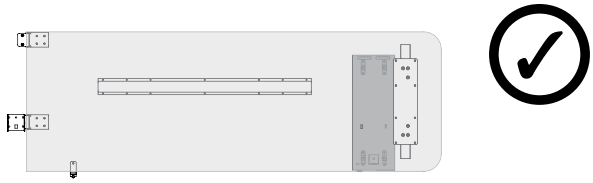

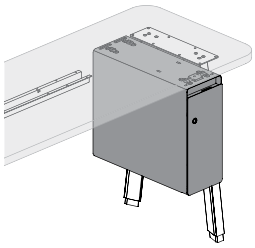

- When used under Run-Off for EZ Fence (JZWRF), the storage must be installed inside the leg to avoid any conflict between the leg plate and the storage

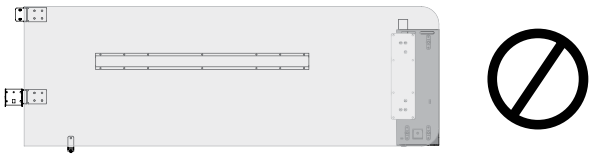

planning with suspended personal storage (continued)

standard (S) (continued)

NOTE: This style is **not** available with hiSpace Height-Adjustable Tables

Worksurface for Navigate Base

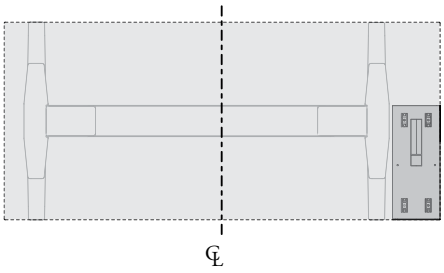

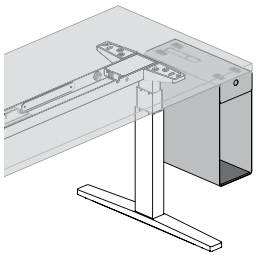

- Can also be mounted underneath Rectangular or 120° Worksurface for Navigate Base. It can be mounted on the external side of the base mechanism when it is recessed from the end of the worksurface. Refer to page 398 for details

Curved Corner Worksurface

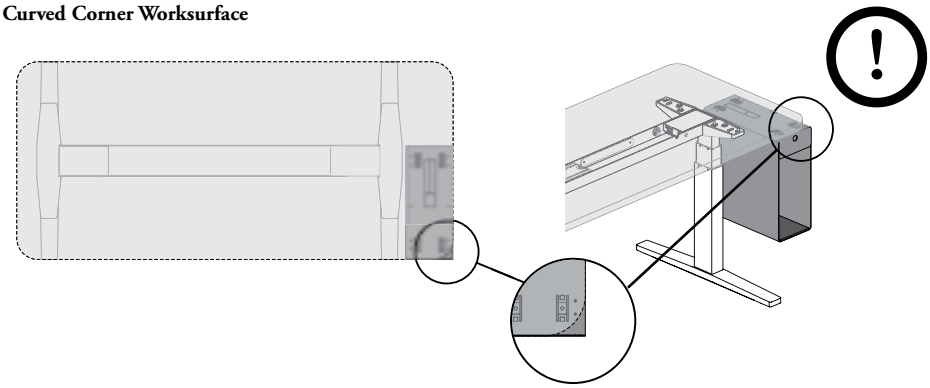

- The curved corner worksurfaces will expose the top of the Suspended Personal Storage when installed on the external side of the base mechanism

height-adjustable table frame recessed (N)

hiSpace or Navigate (Shown) Worksurface

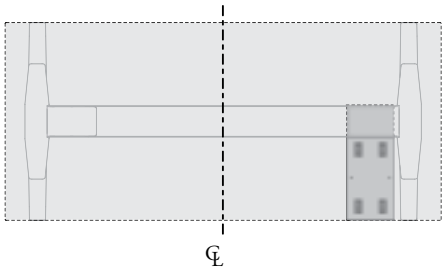

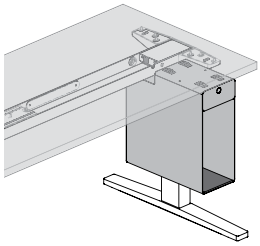

- Can be mounted underneath hiSpace or Navigate Rectangular or 120° Worksurface. It mounts on the internal side of the base mechanism
- The Suspended Personal Storage comes with a cut-out to allow enough clearance for hiSpace Felt Cover or Navigate Cross Channel

drawer modules, tray module and utility box basics

The following Drawer Modules are available for freestanding use, can be suspended inside open space of the open/file pedestal or can be suspended under a worksurface. The Tray Module and Utility Box can be used freestanding only.

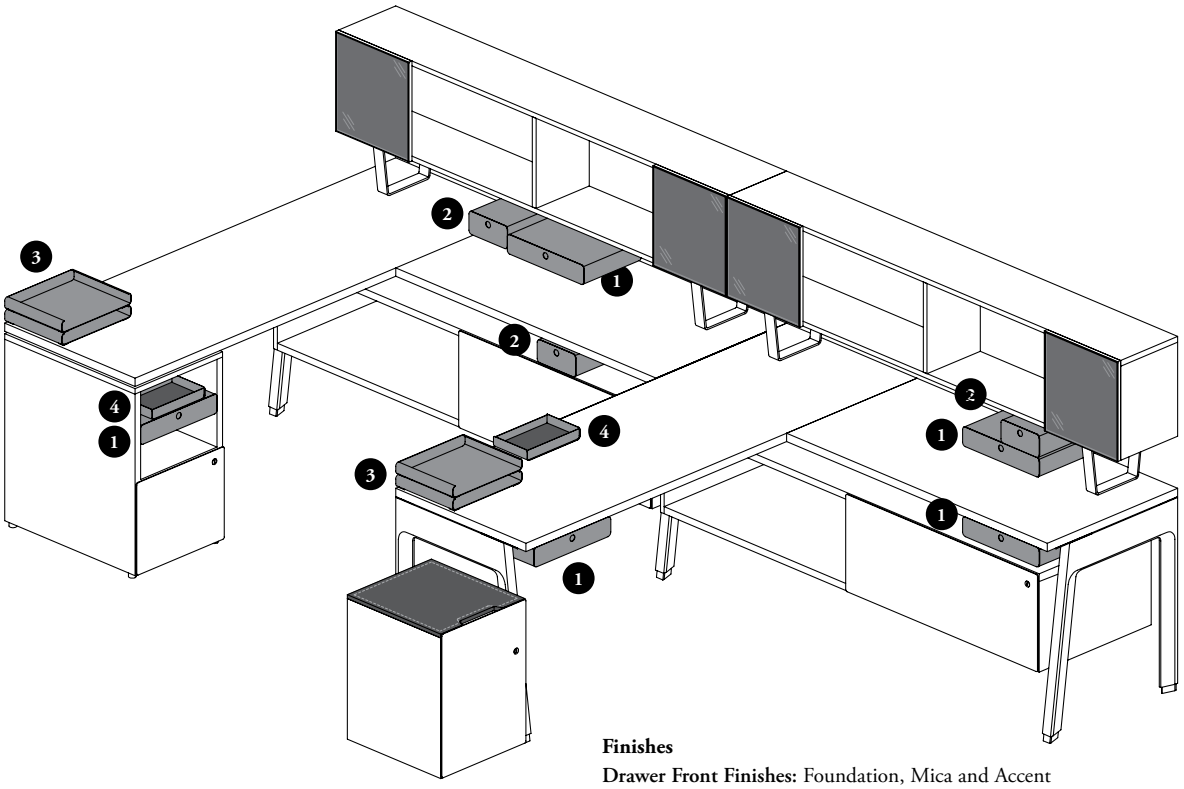

Finishes

Drawer Front Finishes: Foundation, Mica and Accent
Case Finishes: Foundation, Mica and Accent
Liner Finish (if applicable): Loft

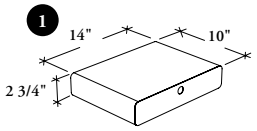

Letter (L)

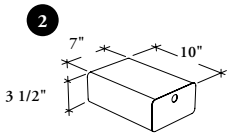

Pocket (P)

Drawer Module (JNAMD)

- Store small personal items
- Letter (L) or Pocket (P) sizes are available
- Are modular and stackable, Freestanding mounting style also allows the module to be layed on any horizontal surface
- Have no pull; use finger hole for drawer opening

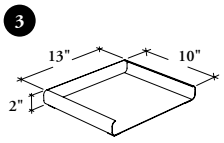

Letter (L)

Tray Module (JNAMT)

- Stores and organizes paper
- Used with standard paper (letter-size) and standard courier envelopes only
- Can be stacked to provide more vertical storage

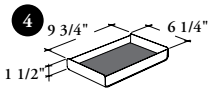

Utility Box (JNAUB)

- Stores small objects
- Can be easily repositioned by the user to facilitate the workspace organization to fit personal items
- Optional in the Suspended Personal Storage – Door (JNAUED) and can be stored in it
- **Cannot** be stacked to provide vertical storage

planning with drawer & tray modules

The following should be considered when planning with Drawer & Tray modules.

Drawer Modules are offered in three mounting styles:

drawer module mounting styles

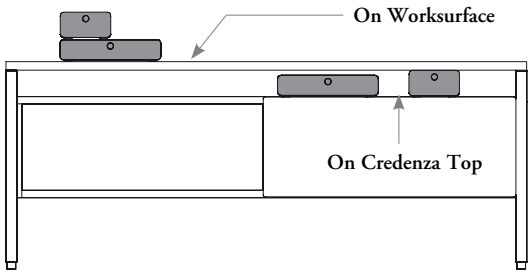

Freestanding (F)
- Can be layed anywhere on a worksurface, a storage or a shelf
- Can also be placed inside Mobile Pedestal with Seat. Two configuration are allowed:

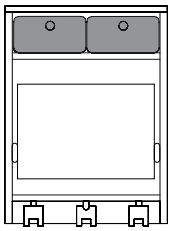

Two Pocket Drawers can be placed side-by-side on inside shelf

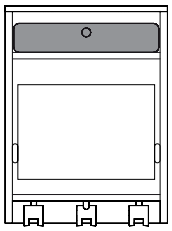

Only one Letter Drawer can be placed centered on inside shelf

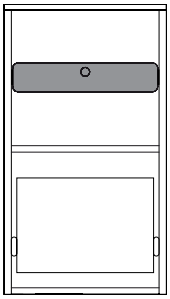

Pedestal with Open Cubby (O)
- Only the Letter-Size Drawer (L) can be installed centered in the upper open compartment of an Open/File Pedestal (JNFPSO)
- **Not** available with Pocket Drawer (P)

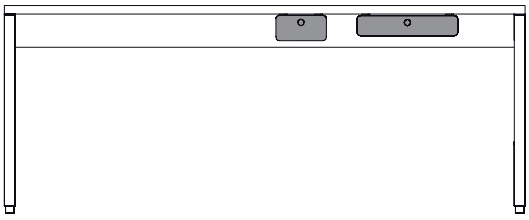

Under Worksurface (W)
- Can be suspended anywhere under a worksurface
- The drawer must be fixed to the worksurface
- Can also be suspended under a Writable Glass Worksurface

tray module mounting styles

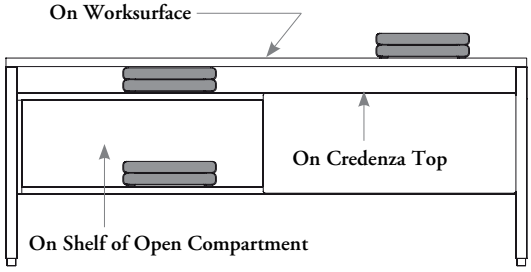

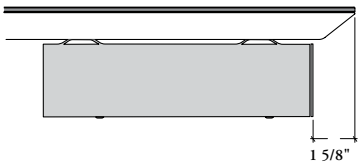

Freestanding (F)
- Can be placed anywhere on a worksurface, top or shelf of a storage
- Four trays maximum can be stacked

metal screen accessories basics

Expansion Cityline offers a number of metal screen accessories that are designed for use with Metal Lift and Drop Tile and Metal Height-Adjustable Table Screen.

Can be used with Lift and Drop Tile – Metal Accessory (JZTMA), Accessories – Lift and Drop Vertical Pole Mounted (JZTPAL, JZTPAR or JZTPAS) or Metal Elevated Screen Height-Adjustable Table Mounted (Lateral: JNSMLH, Back: JNSMEH or Corner: JNSMCH)

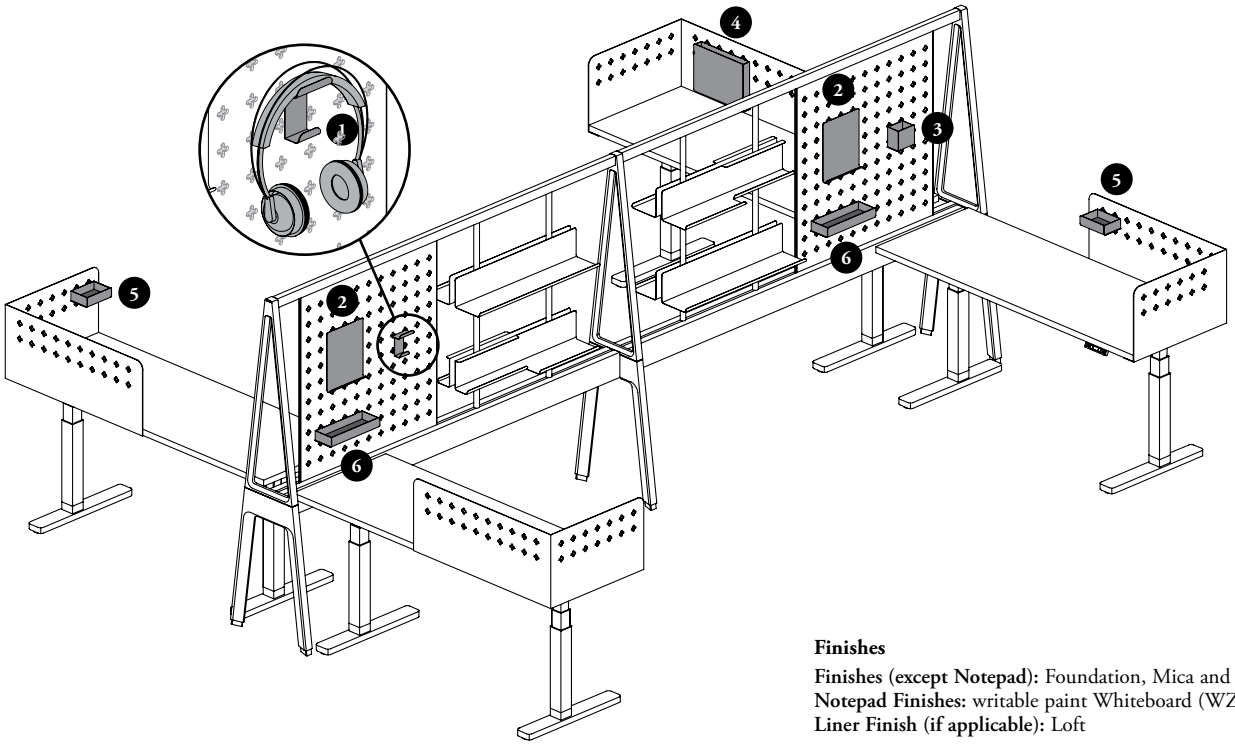

Finishes

Finishes (except Notepad): Foundation, Mica and Accent
Notepad Finishes: writable paint Whiteboard (WZ) only
Liner Finish (if applicable): Loft

Metal Screen Accessories (JNAPM)

- These collection of accessories can be easily replaced by the user to facilitate the workspace organization to fit personal items
- These accessories are universal and can be mounted onto Plus (P) or Square (S) Patterns
- Can also be mounted on the top edge of the metal screens
- Six styles are available:

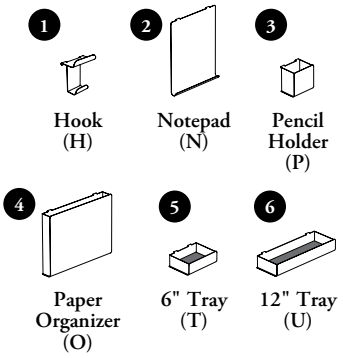

Hook (H) | **Notepad (N)** | **Pencil Holder (P)**

Paper Organizer (O) | **6" Tray (T)** | **12" Tray (U)**

Plus Pattern Installation

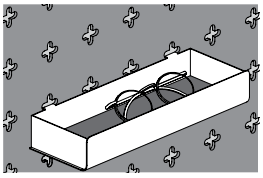

Square Pattern Installation

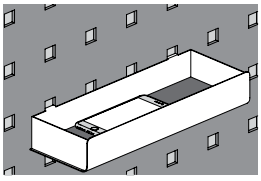

Top Edge Installation

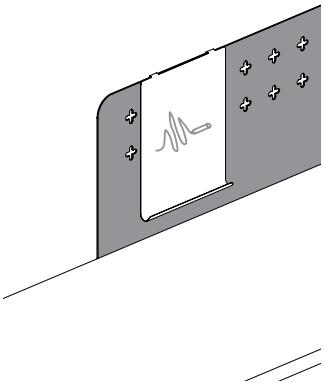

planning with metal screen accessories

The following should be considered when planning with Metal Screen Accessories.

All dimensions listed below are actual

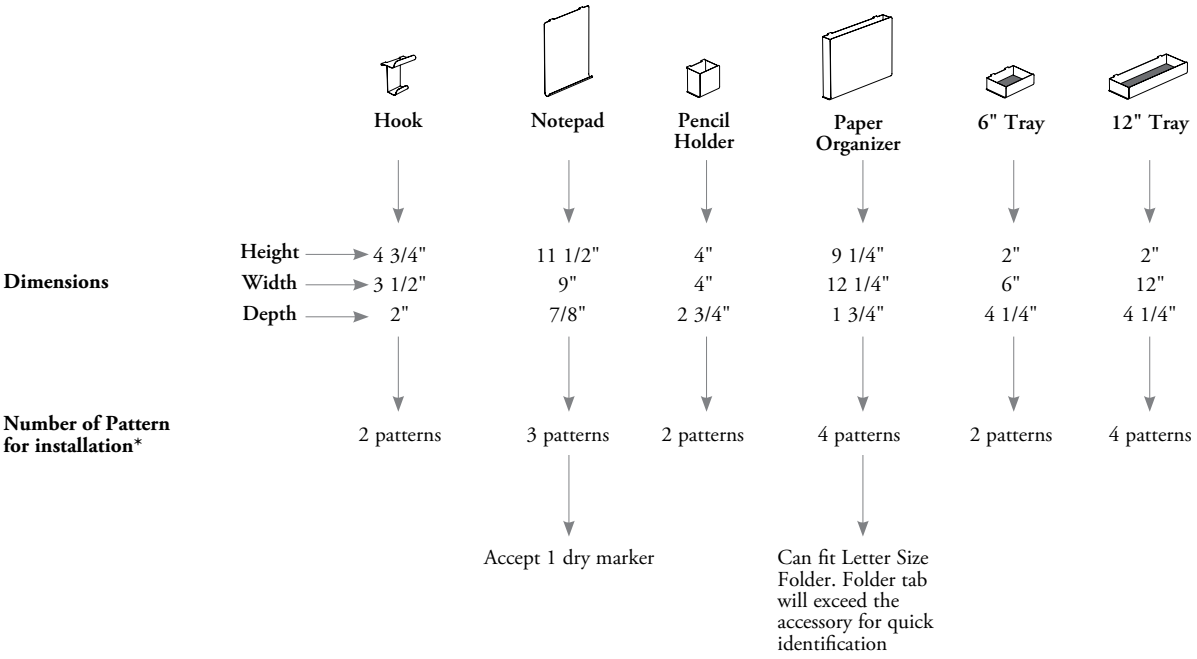

* These accessories required a specific number of patterns for installation. Some combination may be limited, depending on screen size and accessories specified

metal screen accessories applications

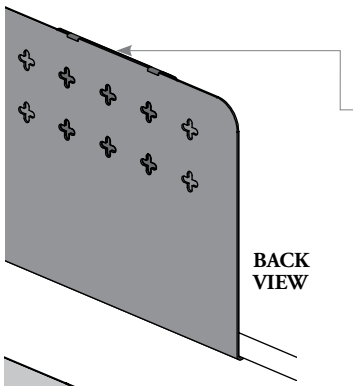

Installation on Top Edge

Accessory brackets will be visible on the other side of metal screen, when mounted on these products:

– Metal Lateral, Back or Corner Elevated Screen – Height-Adjustable Table Mounted (JNSMLH, JNSMBH or JNSMCH)

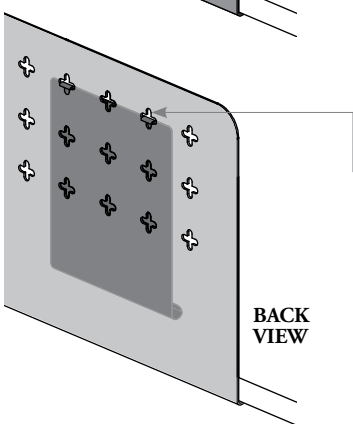

Installation in Patterns

Accessory will be visible through patterns on Metal Lateral, Back or Corner Elevated Screen – Height-Adjustable Table Mounted (JNSMLH, JNSMBH or JNSMCH) or Lift and Drop Tile – Metal Accessory (JZTMA)

planning with metal screen accessories (continued)

The position of Metal Screen Accessories can interfere with hiSpace or Navigate Height-Adjustable Tables. For more details, refer to Height-Adjustabilty section to ensure to respect the required clearance

metal screen accessories applications (continued)

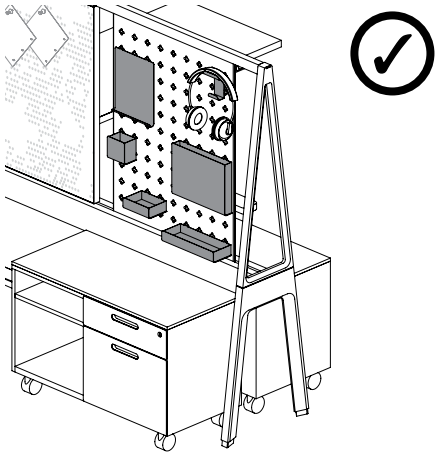

Metal Screen Accessories mounted on Lift and Drop Tile – Metal Accessory

The Metal Screen Accessories can be installed on any pattern set of a 56", 57" or 66" datum height metal lift and tile. Hovever, some metal accessories dues to their height **will not** fit in every patterns

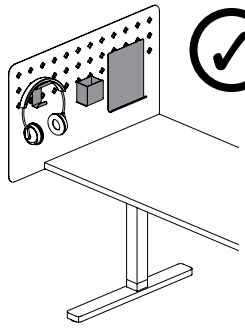

42" or 51" (Shown) Datum Height Metal Screen

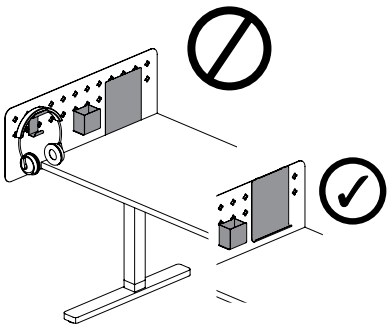

42" Datum Height Metal Screen

Metal Screen Accessories mounted on Metal Elevated Screen – Height-Adjustable Table Mounted

- The Metal Screen Accessories can be installed on any pattern set of a 42" or 51" datum height metal elevated screen
- Paper Organizer (O) and Notepad (N) Metal Screen Accessories **cannot** be installed on pattern set of a 42" datum height metal elevated screen due to limit height space

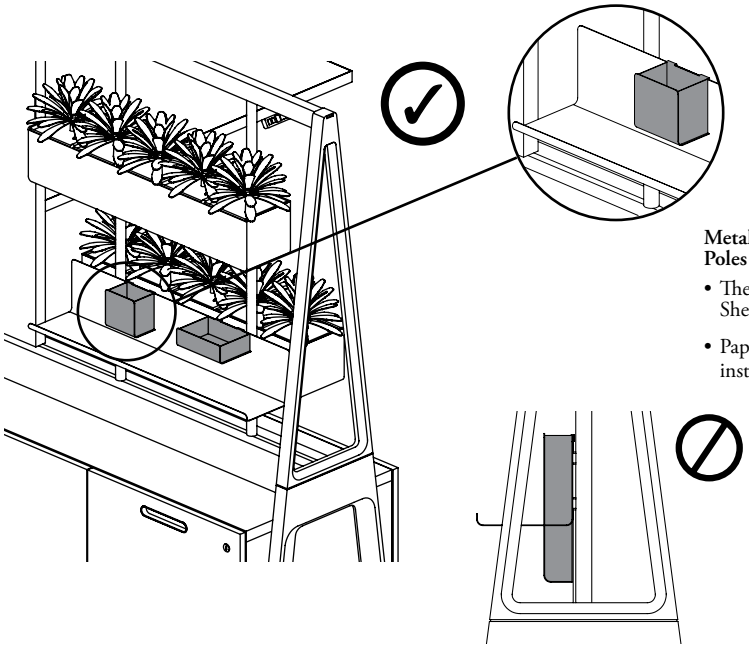

Metal Screen Accessories mounted on Accessories – Lift and Drop Vertical Poles Mounted

- The Metal Screen Accessories can be installed back edge on 6" Shelf (JZTPAS), Shelf/Book Display – Left (JZTPAL) or Book Display/Shelf – Right (JZTPAR)
- Paper Organizer (O) and Notepad (N) Metal Screen Accessories **cannot** be installed on back edge on 6" shelf dues to their height

freestanding planter box & planter liner basics

Expansion Cityline offers Freestanding Planters to reconnect office workers with nature, creating healthier, happier and more inspiring workplaces, by bringing them in contact with nature every day.

All dimension are actual

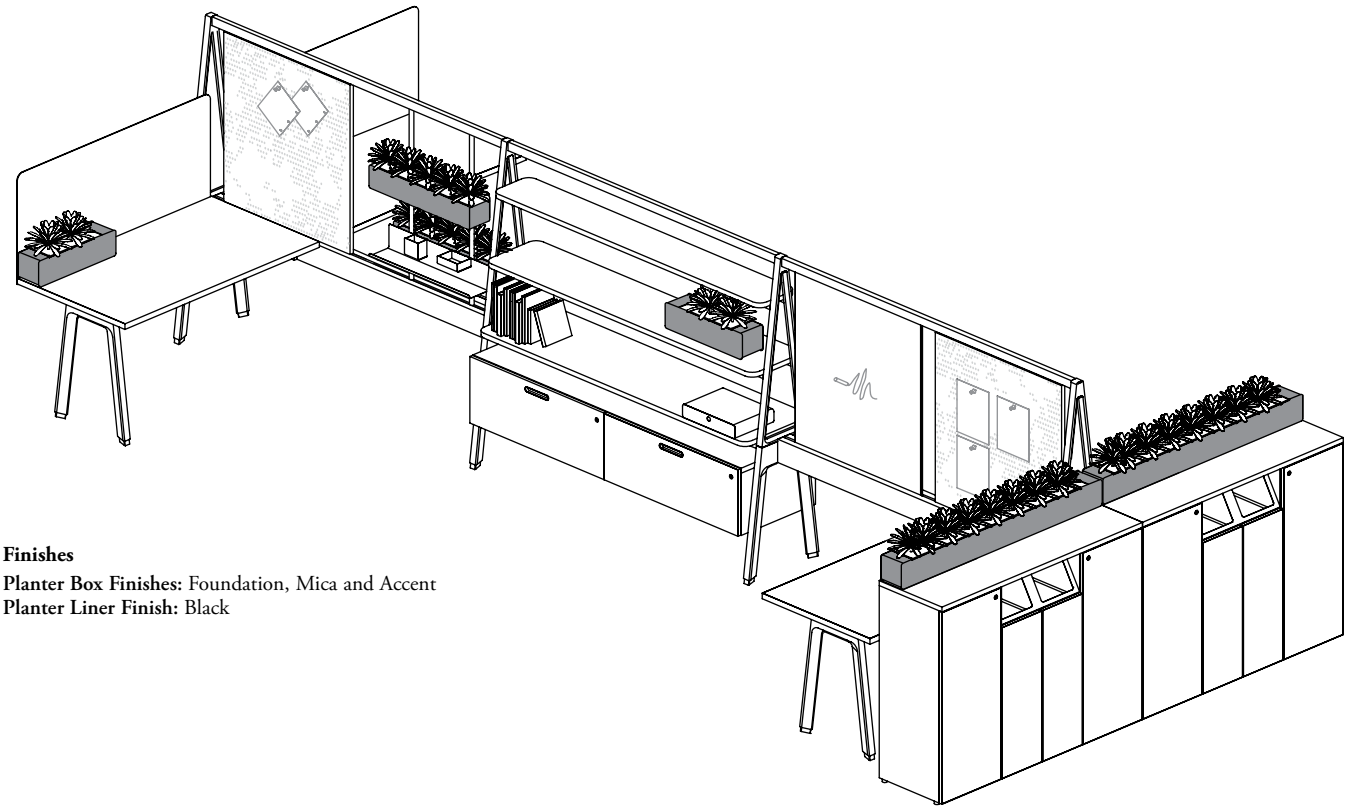

Finishes

Planter Box Finishes: Foundation, Mica and Accent
Planter Liner Finish: Black

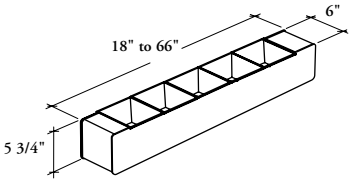

Freestanding Planter Box (JNAPF)

- Allows integration of planters on horizontal surface
- Planter Liners are included to welcome biophilia and protect metal Freestanding Planter Box. The number of liners varies according the box width.Other liners can also be specified separately
- Planter Box is available in 18", 24" – 45" (3" increments) and 48" – 66" (6" increments)
- Planter Box comes with bumpers to reduce movement on the surface
- The number of liner supply varies according to the width of the Planter Box, see chart below

Planter Box Width	Planter Liner available
18"	2
24"	3
27" or 30"	4
33" or 36"	5
39" or 42"	6
45" or 48"	7
54"	8
60"	9
66"	10

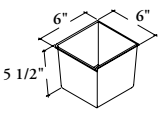

Planter Liner (JNAPEL)

- Consists of a thin wall plastic container design to contain soil or plant pot
- It is designed to protect the Planter Box interior by covering all metal edges and to make sure that, in case of over watering, the excess will be pushed at the front, away from the beam and electrical components
- Liner can be used alone but recommended to be placed in a Planter Box
- Included with all Planter Boxes, these extra liners are use to replace damage liner or allow off-site repotting and maintenance of the planter

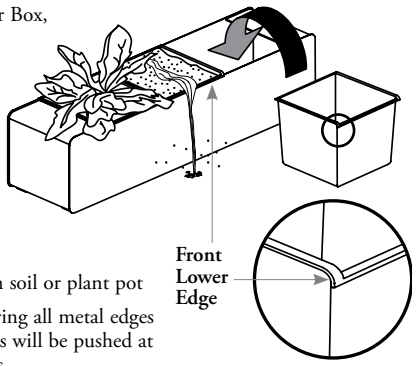

planning with freestanding planter boxes & planter liners

The following should be considered when planning with Freestanding Planter Boxes and Planter Liners.

freestanding planter boxes & planter liners applications

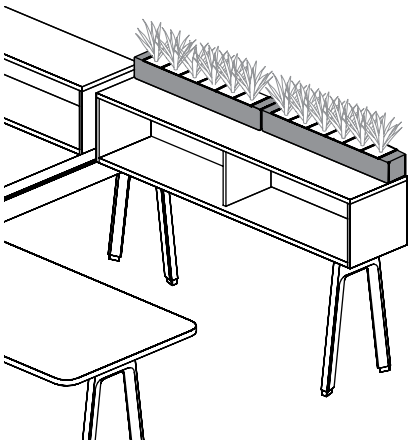

Side-to-Side Application

Freestanding Planter Box can be combined side-to-side to reach the desired dimension. Here is some possible combination used to create larger set-up

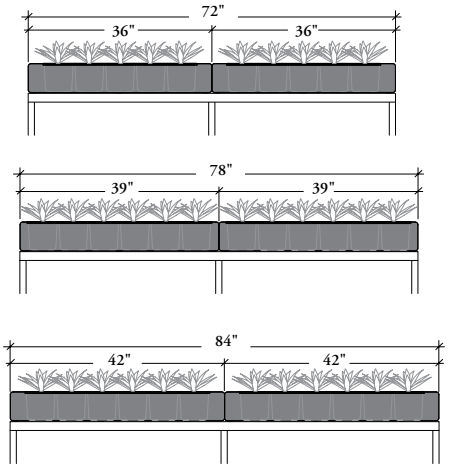

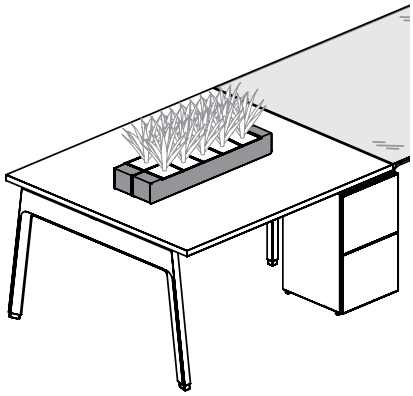

FRONT VEW

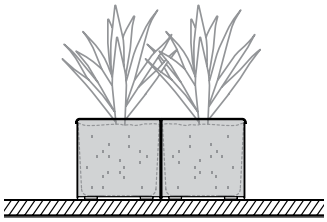

Back-to-Back Application

Freestanding Planter Box can be combined back-to-back to create a larger planter

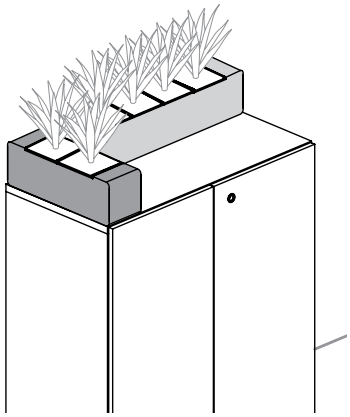

90° Corner Application

Freestanding Planter Box can be combined in 90° angle

planning with freestanding planter boxes & planter liners (continued)

freestanding planter boxes & planter liners applications (continued)

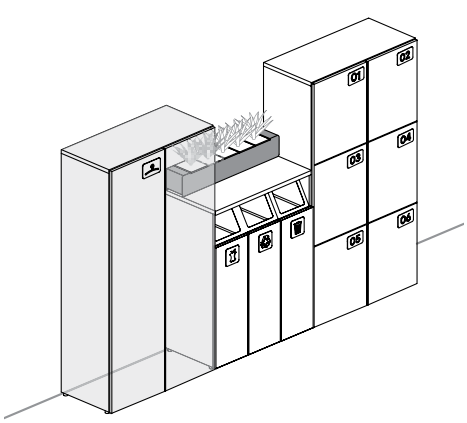

Between two higher storage
A Freestanding Planter Box can be placed between two higher storage. The actual dimension of each planter is 1/8" narrower than the nominal size

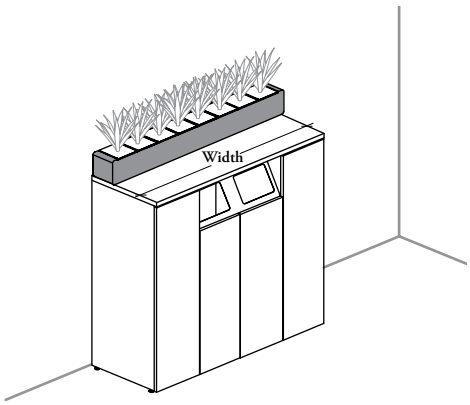

A Freestanding Planter Box (JNAPF) can be specified off module or to the same width (on-module) as the Lockers or Recycling/Disposal Unit on which it will be mounted

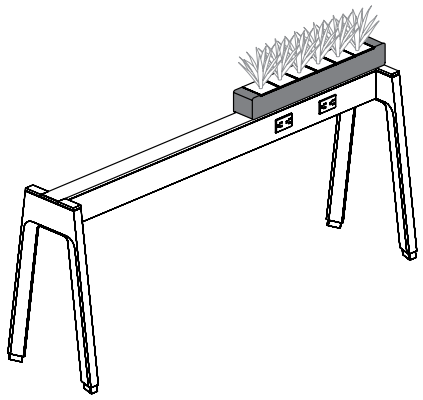

Over a Structural Beam
A Freestanding Planter Box **cannot** be mounted directly on the beam to avoid electrical hazards

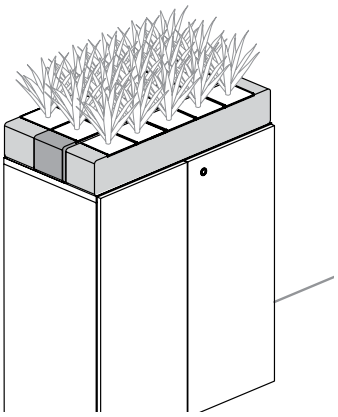

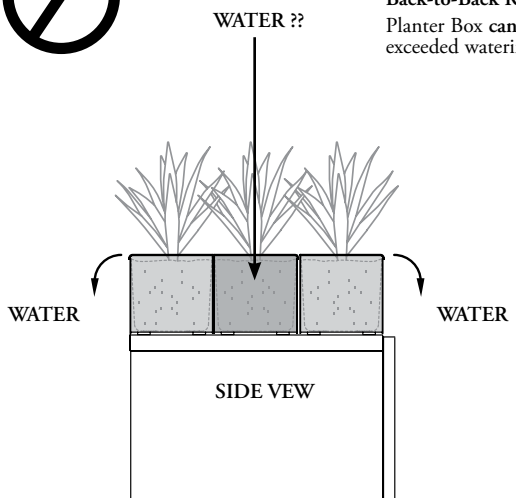

Back-to-Back Repetition
Planter Box **cannot** be repeated more than two times to allow exceeded watering to flow, and to collect the water

linear LED light support basics

Expansion Cityline offers a support for Linear LED Light that is designed for use with Elevated Desk Shelf.

- Can be used under an Elevated Desk Shelf (JNMES) only. For details on Elevated Desk Shelf, refer to Mounted Storage section
- All dimensions listed below are nominal

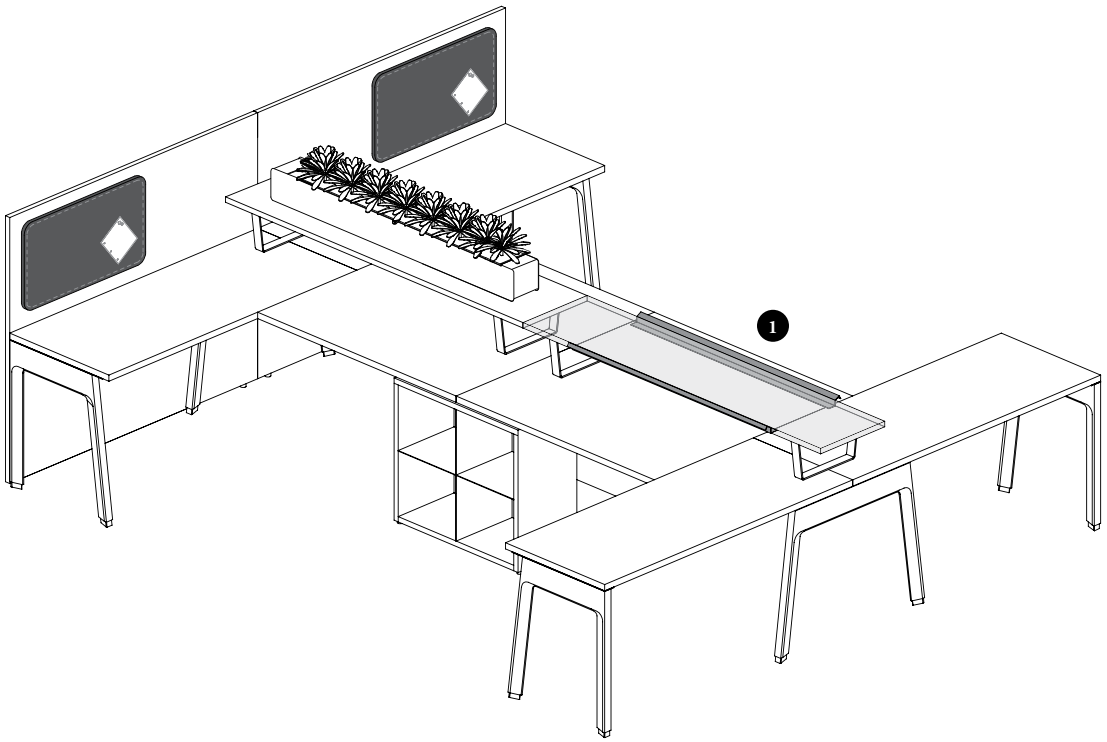

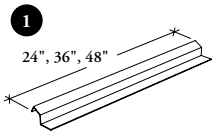

Linear LED Light Support (JNASL)

- Is installed under an Elevated Desk Shelf and allows the installation of a Linear LED Light (JNELED)
- Can be used with Light Only (0) LED Light Optional Feature
- LED Light Support widths include 24" – 48" in 12" increments
- The specified width must be equal to the width of the Linear LED Light (JNELED)

Finishes: Foundation, Mica and Accent

Can be installed along the Mounted Storage between supports:

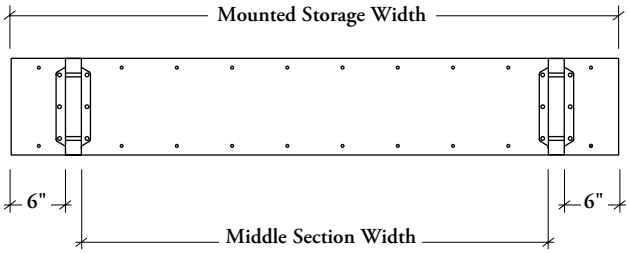

Mounted Storage Width	Middle Section Width
84"	66"
78"	60"
72"	54"
66"	48"
60"	42"
54"	36"
48"	30"
42"	24"
36"	18"
30"	12"

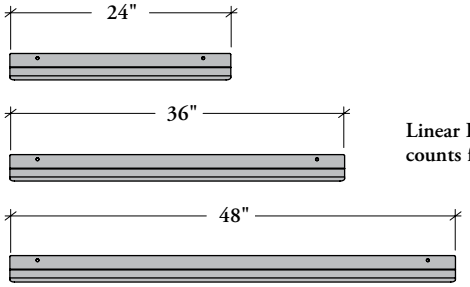

Linear LED Light Support counts for shown dimension

table companion marker kit basics

Can be used with all Writable Glass Worksurfaces to provide storage for dry-erase markers. The bottom of Table Companion features a dry-erase felt pad.

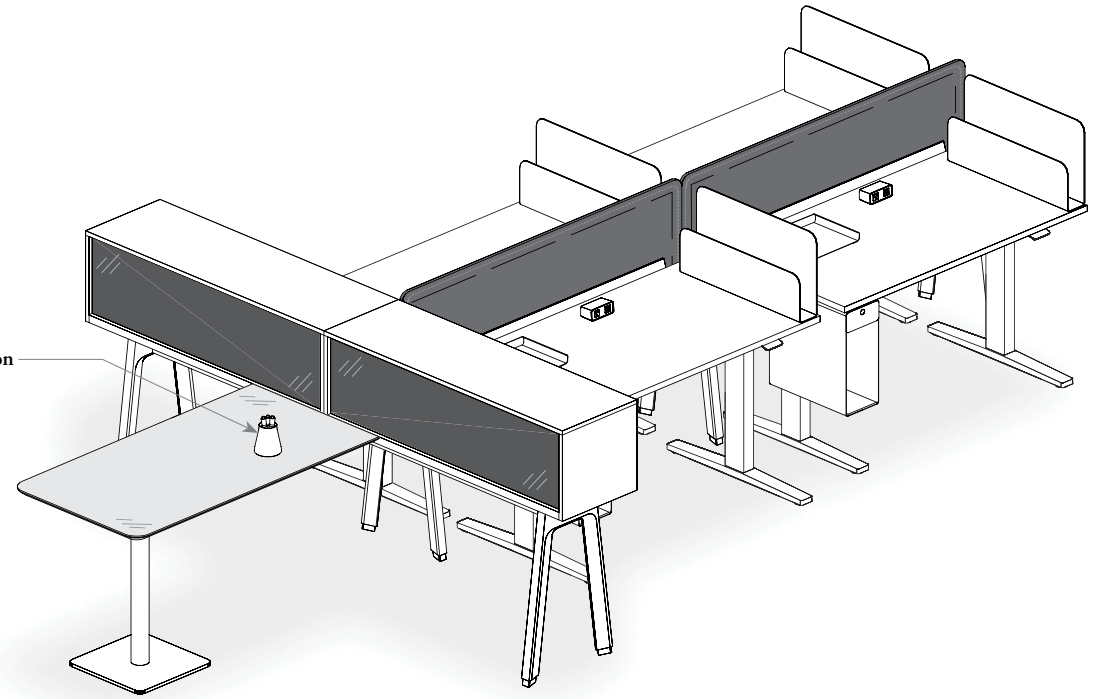

Table Companion Marker Kit (JNAMK)

Is included with all Writable Glass Worksurfaces and can also be specified separately

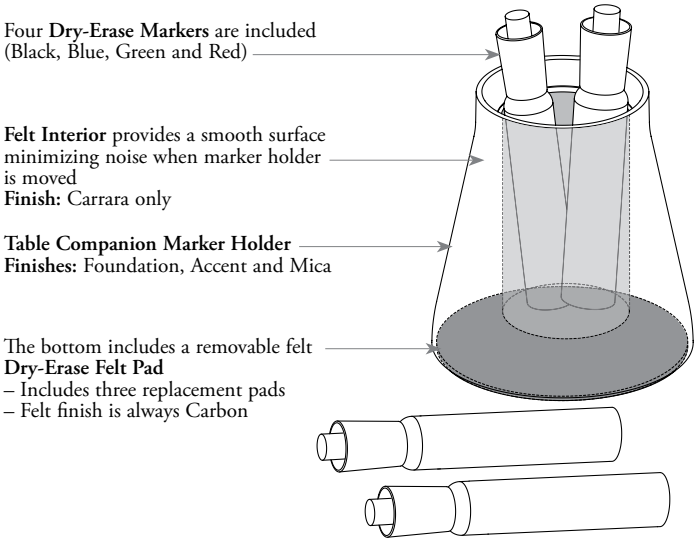

Dry-Erase Pads for Table Companion Marker Holder (JNAME)

Three pads are included with all Writable Glass Worksurfaces and can also be specified separately

- Felt finish is always Carbon

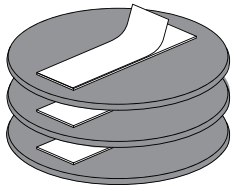

box drawer organizer basics

This Box Drawer Organizers provide storage space for personal small items inside a box drawer.

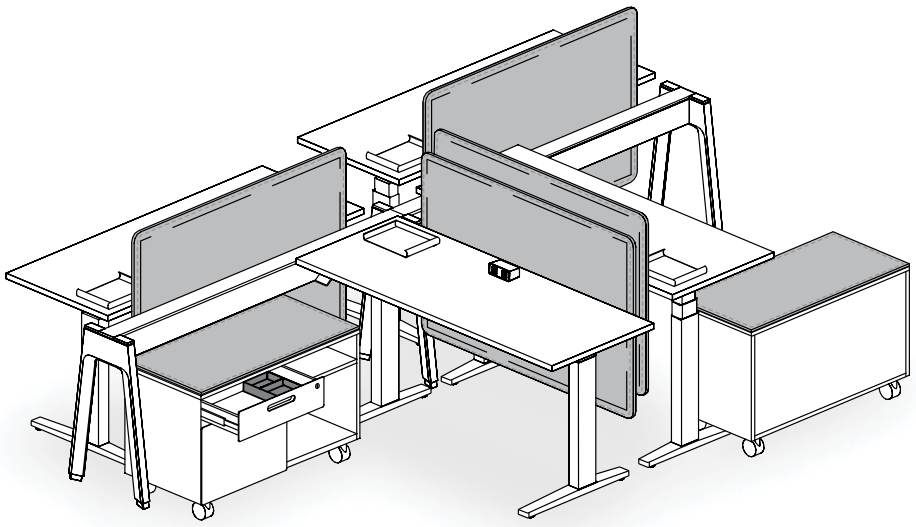

Finishes

Organizer Finishes: Foundation, Mica and Accent
Sliding Tray Finishes: Foundation, Mica and Accent
Felt Organizer Liner and Felt Box Drawer Liner Finish: Loft

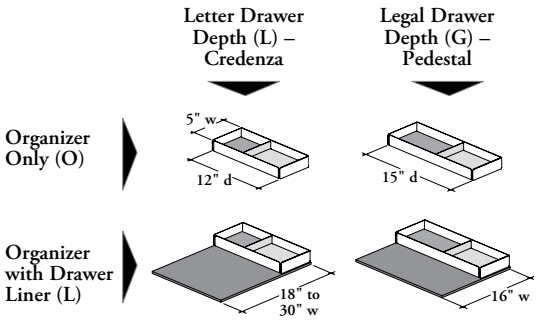

Box Drawer Organizers (JNAOS)

- Provide compartmentalized accessories above a mobile storage, a worksurface, or inside a small box drawer or box drawer. The Sliding Tray can be moved or removed from organizer
- Are available in two styles :
  - Organizer Only (O) and can be used with:
    - Mobile Credenza (JNCMO)
    - Mobile Pedestal (JNFPM)
    - Pedestal (JNFPS)
    - Beam Towers (JNFBPL, JNFBWF)
    - Freestanding Towers (JNFTPL, JNFTWF)
    - Floor Screens with Metal Tower (JZSFTP, JZSFTL, JZSFTT)
  - Organizer with Drawer Liner (L) and can be used with:
    - Mobile Credenza (JNCMO_18", 24", 30")
    - Mobile Pedestal (JNFPM_16")
    - Pedestal (JNFPS_16")
    - Beam Tower (JNFBWF_16")
    - Freestanding Tower (JNFTWF_16")
    - Floor Screens with Metal Tower (JZSFTP, JZSFTL, JZSFTT_16")

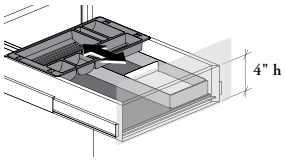

- 4" high Box Drawer allows to stack its Pencil Tray over the Box Drawer Organizer. Both items must be placed side-by-side in a 3" high Small Box Drawer

box drawer organizer applications

Organizer Only

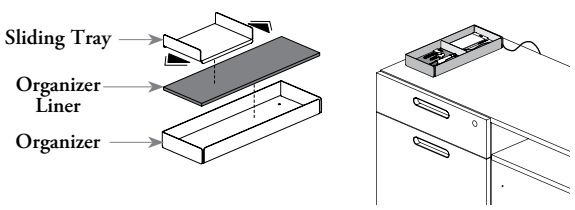

Organizer with Drawer Liner

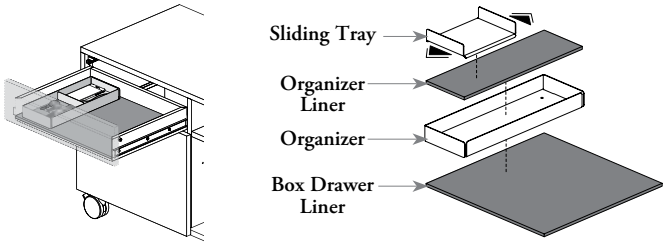

file drawer organizer basics

The following file drawer organizers provide personal small items storage space inside a file drawer.

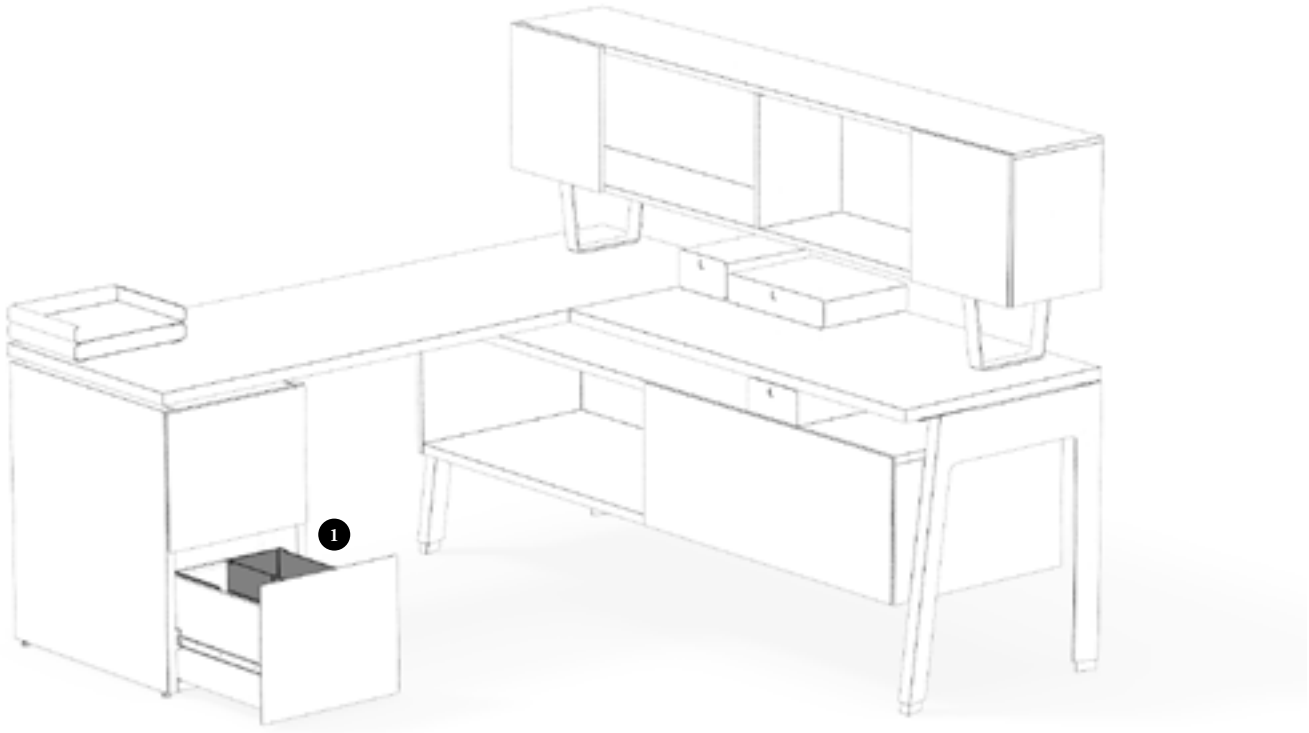

Finishes
Upper Cubby Finishes: Foundation, Mica and Accent
Lower Cubby Finishes: Foundation, Mica and Accent

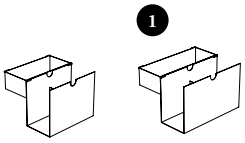

Letter (L) Legal (G)

File Drawer Organizer (JNASO)
- Are organizational tools that can be used inside pedestal or file drawers
- Can be specified for Letter- (L) or Legal-Sized (G) paper
- Can be mounted side-by-side or stacked

file drawer organizers applications

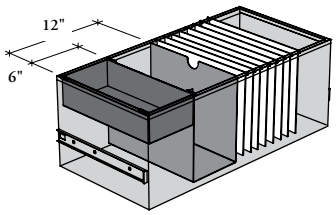

Side-by-Side

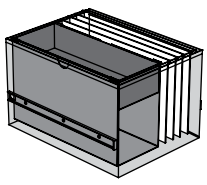

Stacked

planning with file drawer organizers

The following should be considered when planning with File Drawer Organizers.

The drawer filing capacity is reduced by 12" when the organizers are installed side-by-side and by 6" when mounted one inside the other. Refer to each storage section for drawer sizes

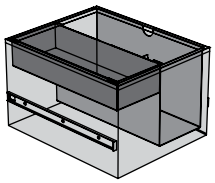

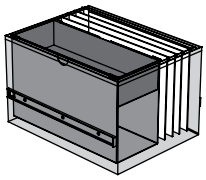

		Compatible Storage
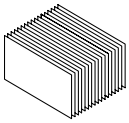 **Drawer Depth & Paper Size Allowed:** • Legal	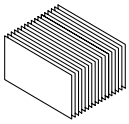 **Drawer Depth & Paper Size Allowed:** • Legal	• Mobile Pedestal (JNFPM) • Mobile Pedestal with Seat – Felt (JNFMP) • All Pedestals with File Drawers (JNFPS) • Combo Pedestal (JNFCP) • Lateral File (JNFLF) • Suspended Pedestal – File Drawer (JNBP) • Floor Screens with Metal Tower – One or Two File Drawers – EZ Post-Mounted (JZSPOPF, JZSFTPF) • Floor Screens with Metal Tower – One or Two File Drawers (JNSFDLF, JNSFDTF, JNSFTLF, JNSFTTF) • EZ Suspended Credenzas (JZBSO, JZBFF)
n/a	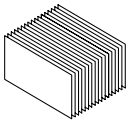 **Drawer Depth & Paper Size Allowed:** • Legal	• Beam Tower with Drawers – Lateral Access (JNFBPL) • Freestanding Tower with Drawers – Lateral Access (JNFTPL)
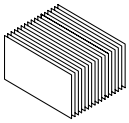 **Drawer Depth & Paper Size Allowed:** • Legal	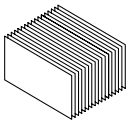 **Drawer Depth & Paper Size Allowed:** • Legal	• Beam Tower with Drawers and Wardrobe – Front Access (JNFBWF) • Freestanding Tower with Drawers and Wardrobe – Front Access (JNFTWF)
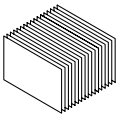 **Drawer Depth & Paper Size Allowed:** • Letter	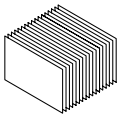 **Drawer Depth & Paper Size Allowed:** • Letter	**18" Depth only:** • Suspended Credenza – Lateral File (JNBSF) • Semi-Suspended Credenza – Lateral File (JNBDF) • Suspended Credenza – Open with Lateral File (JNBSO) • Semi-Suspended Credenza – Open with Lateral File (JNBDO) **20" Depth only:** • EZ Off-Module Suspended Credenza – Lateral File and Cubby – Shared (JZBDO)
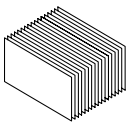 **Drawer Depth & Paper Size Allowed:** • Legal	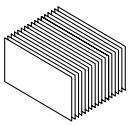 **Drawer Depth & Paper Size Allowed:** • Legal	**18" Depth only:** • Freestanding Credenza – Lateral File (JNFCLL) • Freestanding Credenza – Open with Lateral File (JNFCOL) • Freestanding Credenza – Open with Combo File (JNFCOC) **24" Depth only:** • Suspended Credenza – Open with Combo File (JNBSC) • Semi-Suspended Credenza – Open with Combo File (JNBDC) • Suspended Credenza – Lateral File (JNBSF) • Semi-Suspended Credenza – Lateral File (JNBDF) • Suspended Credenza – Open with Lateral File (JNBSO) • Semi-Suspended Credenza – Open with Lateral File (JNBDO)

boot tray basics

The metal Boot Tray provides additional functionality in the wardrobe section or locker to provide protection againts dirt and water that can be caught on footwear.

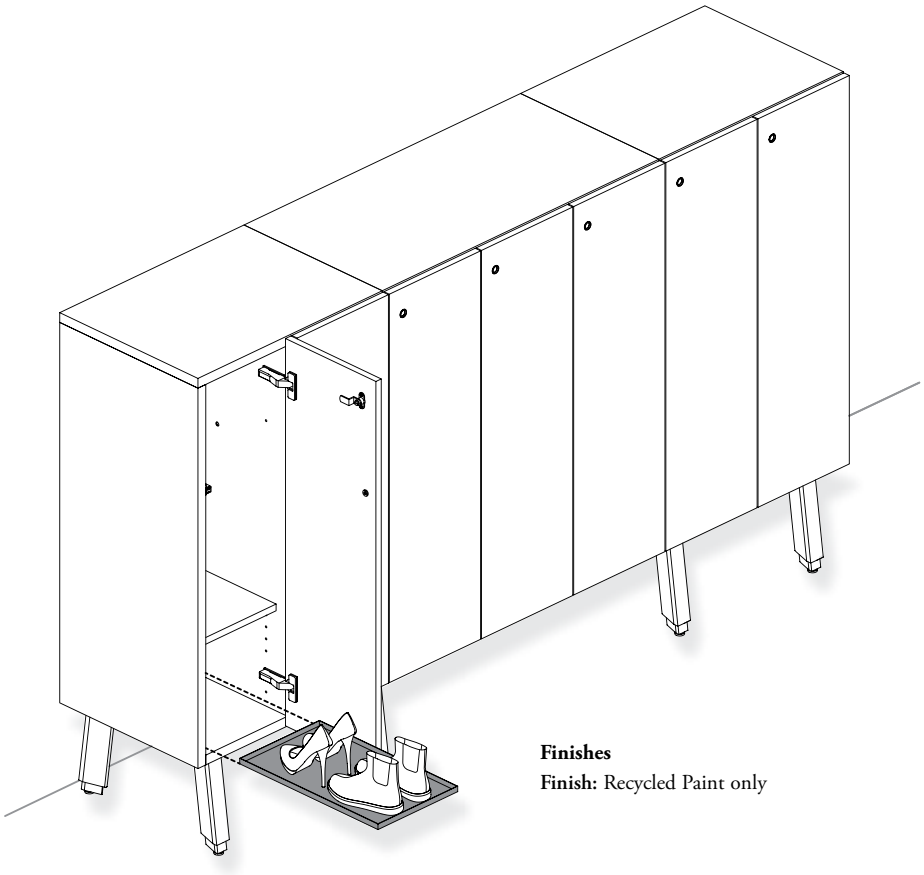

Finishes

Finish: Recycled Paint only

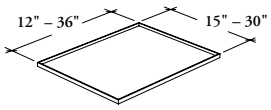

Boot Tray (JNABT)

- Three Storage Types are available: Beam Tower (B) or Freestanding Tower (F) with a wardrobe larger than 8" and Lockers and Common Lockers (L)
- Depths are available: 15" and 18" – 30" (6" increments)
- Boot Tray width actual dimension depends of the storage type specified and is **not** nominal. Width are available: 12", 14", 15" and 18" – 36" (6" increments)
- **Not** all dimensions are available for storage types specified, refer to individual product pages
- Must be specified the same depth as the storage
- Must be specified the same width as the wardrobe/locker section. **NOTE**: that some storage have many sections, therefore a Boot Tray needs to be specified for each section. Refer to Freestanding Storage section for more details
- This tray fit the full depth of wardrobe sections and can only be installed on bottom or horizontal divider. **Cannot** be installed on adjustable shelf
- Made from galvannealed steel for a superior corrosion resistance

seat pad or seat cushion basics

The following seat pad and seat cushion provide casual guest seating in a workstation.

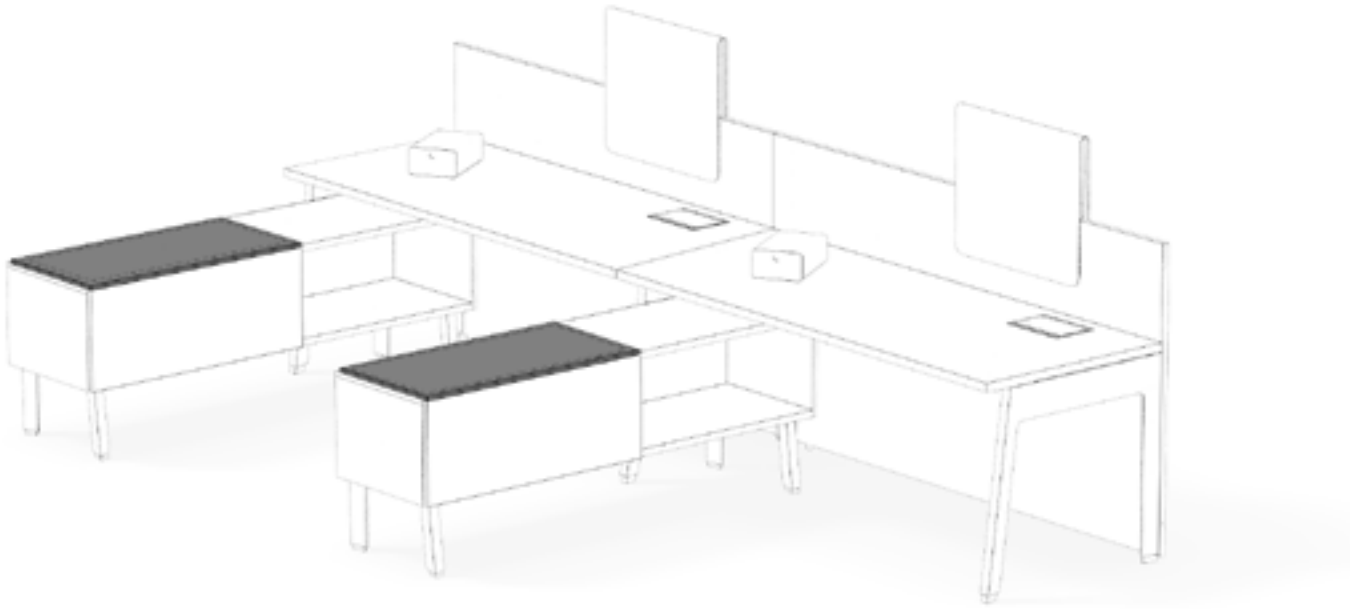

Finishes

Seat Finishes: Feutre or Fabric
Stitches Finishes: Carbon Coordinate (C), Shale Coordinate (E), Carrara Coordinate (G) or Umber Coordinate (M)
Fabric Finishes: Teknion Standard Panel Fabrics
Felt Finishes: Loft

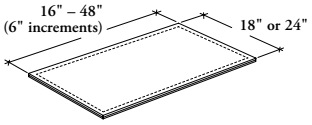

Seat Pad

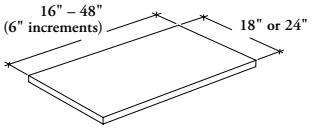

Seat Cushion

Seat Pad – Felt (JNACF) or Seat Cushion – Fabric (JNACU)

- Provides casual guest seating on top of Mobile Pedestal, Mobile Credenza, Freestanding, Suspended or Semi-Supended Credenza styles
- Four Storage styles are available: Double-Sided Beam-Mounted (D), Single-Sided Beam-Mounted (S), Freestanding (F) or Mobile (M)
- 42" or 48" wide are actual dimensions
- **Not** all dimension are available on top of storage, refer to individual product pages

planning with seat pad & seat cushion

- The depth of Seat Pad (Shown) or Seat Cushion is adapted accordingly with specified style
- Four mounting styles (Storage/Beam) are available:
  - Double-Sided Beam-Mounted (D)
  - Single-Sided Beam-Mounted (S)
  - Freestanding (F)
  - Mobile (M)

single- (s) (shown) or double-sided (D) beam-mounted

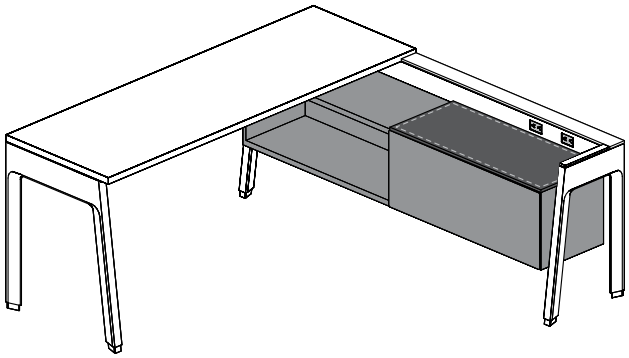

- Are available in 24" to 48" widths
- Are available in 18" or 24" depths
- 24", 30" or 36" wide pad/cushion match drawer widths of Suspended, Semi-Suspended Credenzas – Open with Lateral File (JNBSO, JNBDO)
- Can be installed on all Suspended or Semi-Suspended Credenzas in Single- or Double-Sided Structural Beam Application

freestanding (F)

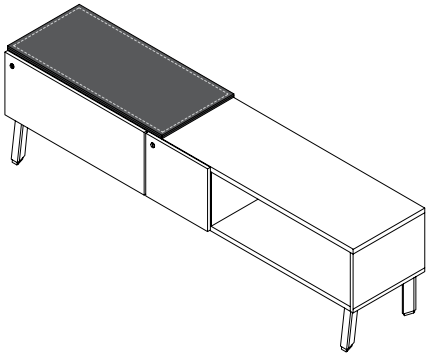

- Are available in 24" to 48" widths
- Only 18" deep pad/cushion is available
- 24", 30" or 36" wide pad/cushion match drawer widths of Freestanding Credenza – Open with Lateral File (JNFCOL)
- Can be installed on all Freestanding Credenzas

mobile (m)

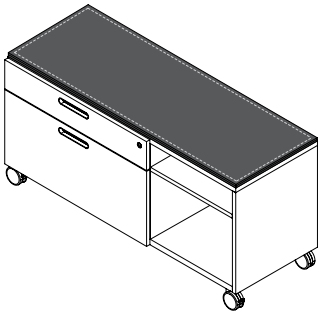

- Are available in 16" to 48" widths
- Only 18" deep pad/cushion is available
- 16" wide pad/cushion match drawer widths of Mobile Pedestal (JNFPM) only
- 24" wide pad/cushion match drawer width of 42" wide Mobile Credenza (JNFC)
- 30" wide pad/cushion match drawer width of 48" wide Mobile Credenza (JNFC)
- 36", 42" or 48" wide pad/cushion match of Mobile Credenza (JNFC) width

planning with seat pad & seat cushion (continued)

seat pad or seat cushion application

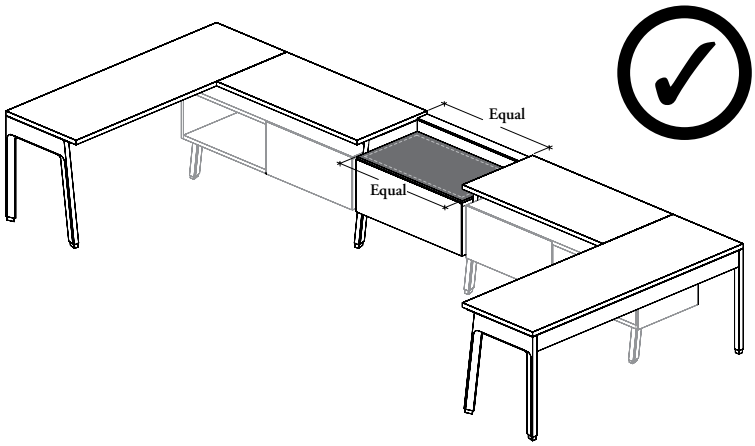

- When a Credenza is specified with the None Leg Width Reduction option, the Seat Pad/Cushion can be specified the same width than the Credenza
- For other Width Reduction options, and for all Semi-Supported Credenzas the Seat Pad/Cushion must be specified at least 6" narrower than credenza

seat cushion application

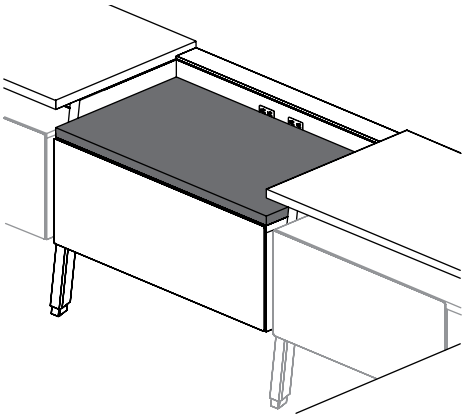

- The Seat Cushion – Fabric should be specified in a dimension that will prevent it from sitting in front of Receptacle Outlets as there will be an in interference

beam-mounted seat pad & accessories basics

Expansion Cityline offers a number of beam-mounted accessories that are designed for use with casual workstation.

Can be used onto Single- or Double-Sided Structural Beam (JNDBB) or Chicago Structural Beam (JNDCB). Only products identified with "EZ Compatible" logo can be used with EZ Fence Beams (JZSBB, JZSBS) and Chicago EZ Fence Beams (JZSCB, JZSCS)

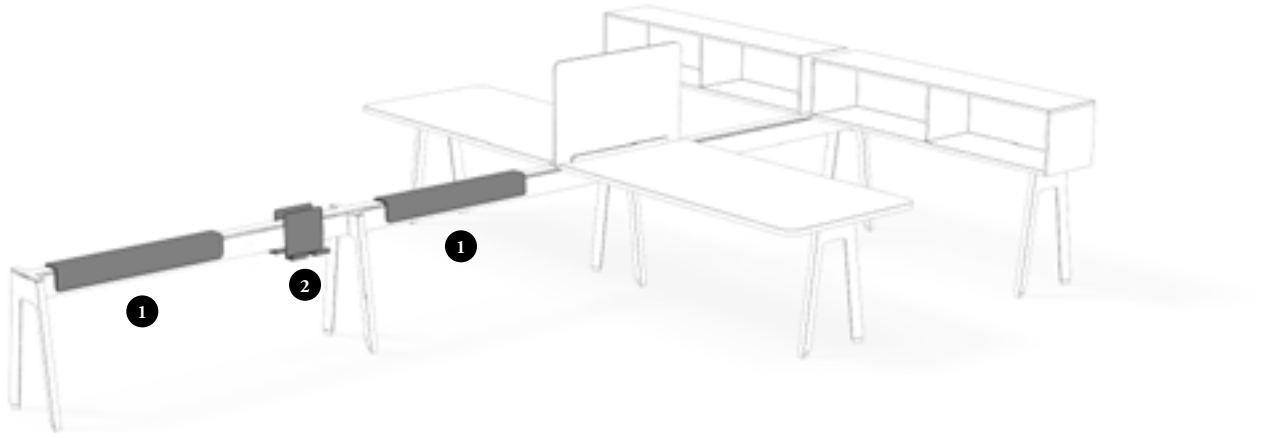

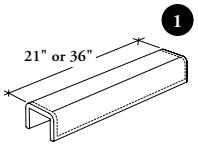

Beam-Mounted Seat Pad (JNABCF)

- Provides casual seating on top of structural beam

Finishes

Seat Finish: Loft
Stitches Finishes: Carbon Coordinate (C), Shale Coordinate (E), Carrara Coordinate (G) or Umber Coordinate (M)

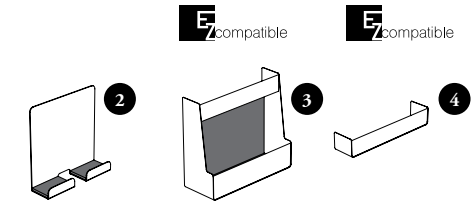

Tablet Support JNABAT | Bag Drop JNABAB | Side Tray JNABAS

Bag Drop (JNABAB), Side Tray (JNABAS) or Tablet Support (JNABAT) – Beam-Mounted Accessories

- Are organizational tools that can be placed anywhere along the structural beam
- Can be specified Single- (S) (Shown) or Double-Sided (D) depending on station style

Accessory Finishes: Foundation, Mica and Accent
Liner Finish: Loft

other beam-mounted accessory basics

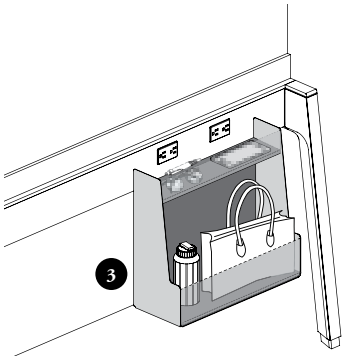

Bag Drop (JNABAB)

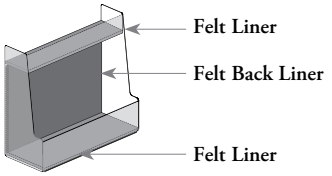

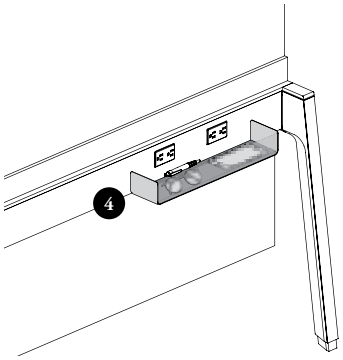

Side Tray (JNABAS)

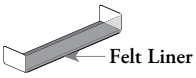

planning with beam-mounted seat pad & accessories

The following should be considered when planning with Beam-Mounted Accessories.

- Can be used onto Single- or Double-Sided Beams
- Structural Beam Covers – Side and Top are mandatory or included EZ Fence Beam Cover when applicable

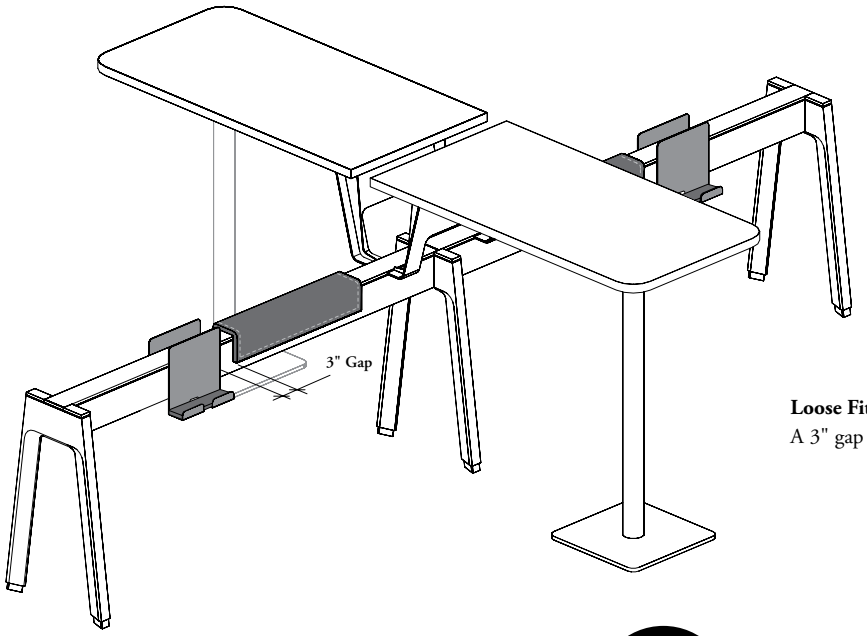

Loose Fit
A 3" gap is mandatory on each side of all accessories

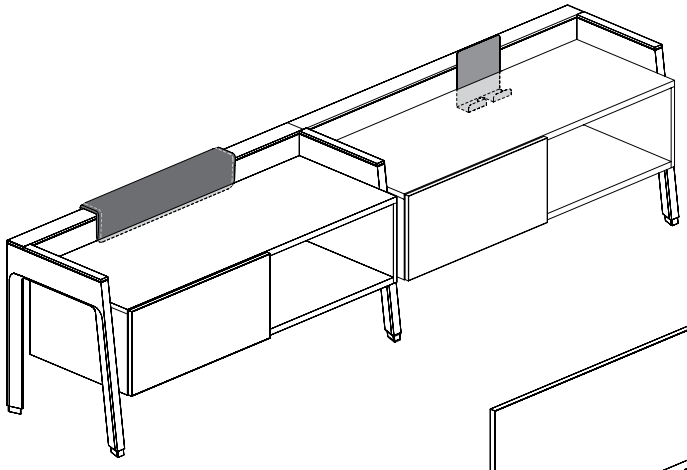

Compatibility restrictions
The Beam-Mounted Seat Pad and Accessories **cannot** be used in combination with Credenzas, Elevated Screens or Floor Screens

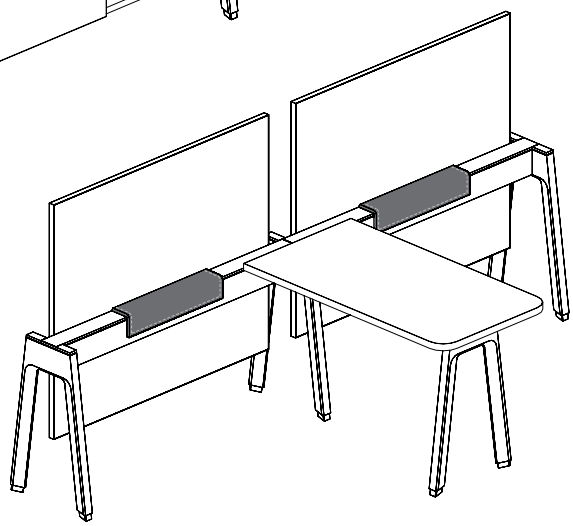

planning with beam-mounted seat pad & accessories (continued)

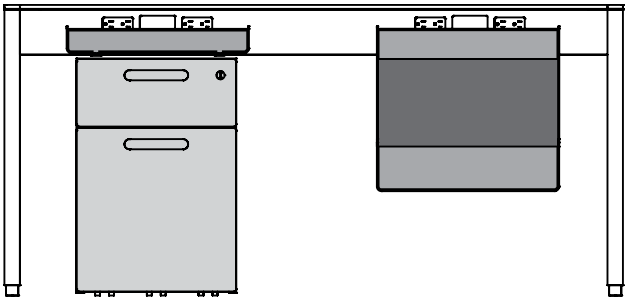

Compatibility with Mobile Pedestal

A Mobile Pedestal **without** Seat Pad/Cushion can be placed under a Side Tray only

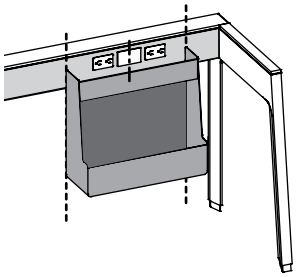

Bag Drop and Side Tray Positions

- They must be installed underneath a Single- or Double-Sided Structural Beam or EZ Fence Beam and aligned with outlet openings of the Side Structural Beam Cover
- Can be aligned with left, center or right opening position
- Brackets are included

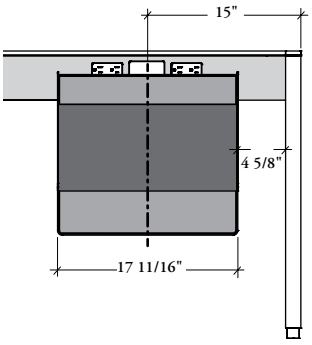

- When there is no opening on the Structural Beam Cover – Side, it is still mandatory to align the Bag Drop and/or Side Tray with the power opening on the Structural Beam
- **Cannot** be aligned with a Facing Down Chicago Power Box

planning with beam-mounted seat pad & accessories (continued)

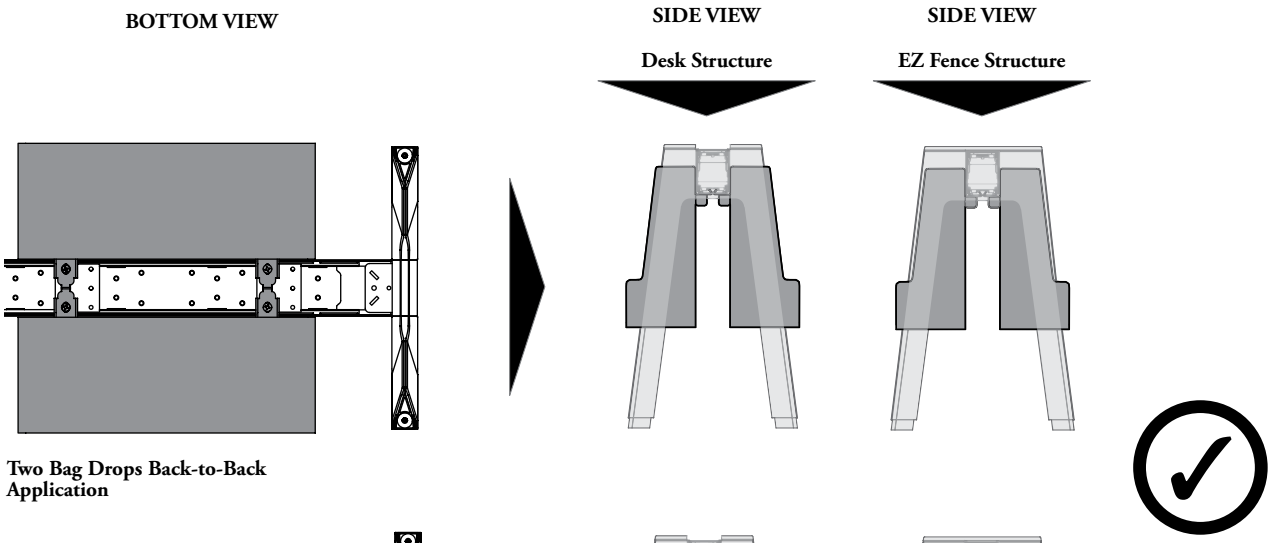

Two Bag Drops Back-to-Back Application

Two Side Trays Back-to-Back Application

Back-to-Back Position

- Two Bag Drops or two Side Trays can be positioned back-to-back on Double-Sided Beam
- One Bag Drop and one Side Tray can also be positioned back-to-back on Double-Sided Beam

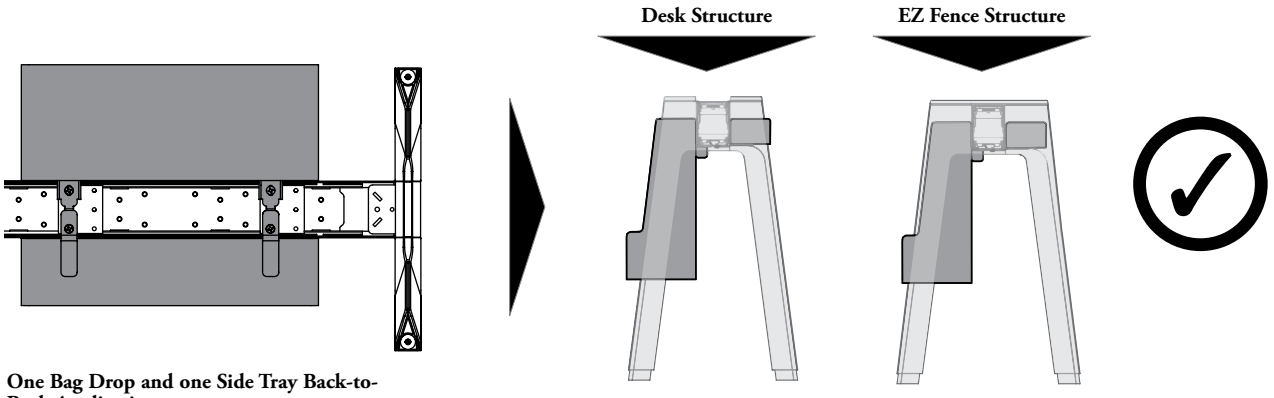

One Bag Drop and one Side Tray Back-to-Back Application

under beam- or worksurface-mounted hook basics

Expansion Cityline offers an hook that can be mounted under worksurface or beam for use with casual workstation.

- Can be used under any Single- or Double-Sided Beam
- Can also be used under all solid worksurfaces

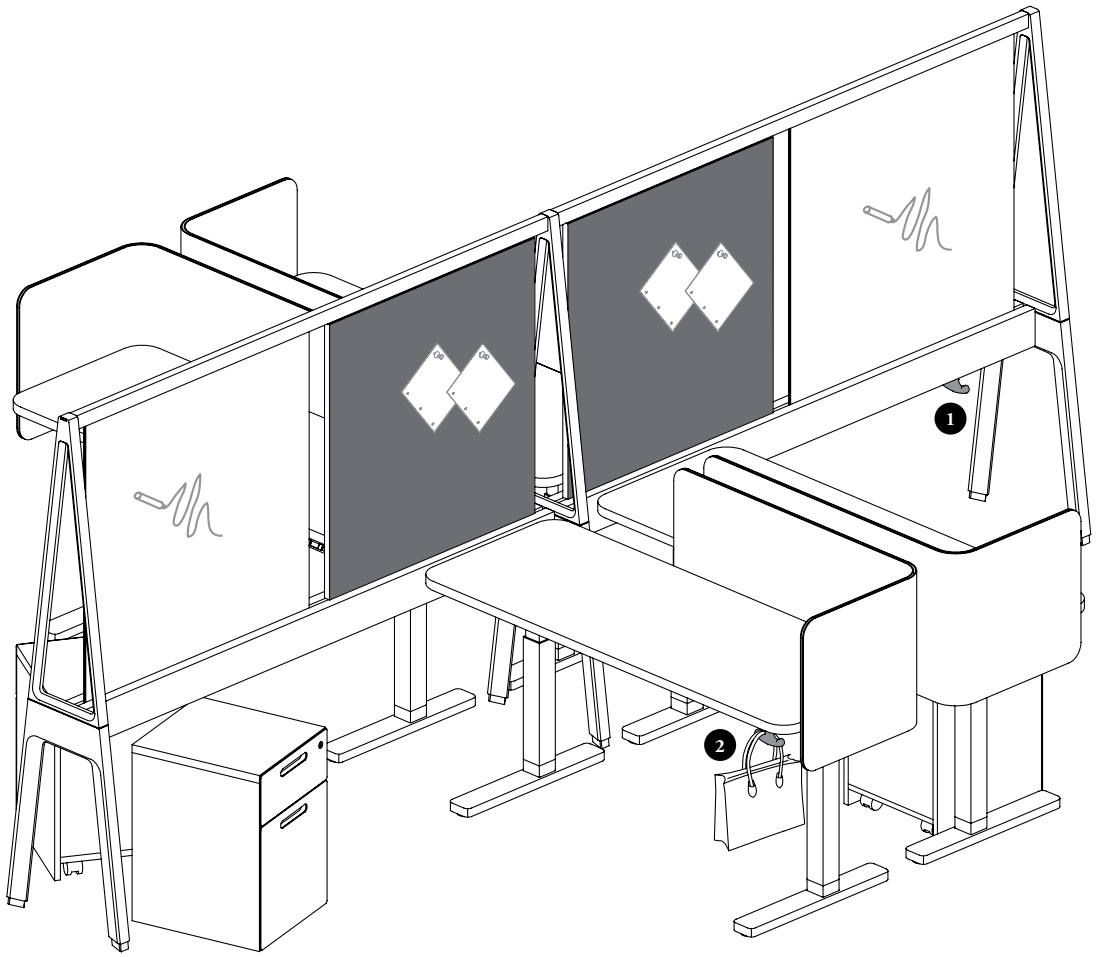

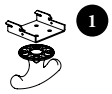

Under Beam-Mounted (B)

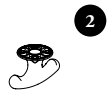

Under Worksurface-Mounted (W)

Hook (JNABH) EZ compatible

- Can be support two bags of any types (handbag, laptop, etc.)
- Maximum charge should not exceed 120 pounds

Finish: Foundation, Mica or Acent

planning with under beam- or worksurface-mounted hook

under beam-mounted (B)

- Can be installed anywhere along the underside of a Structural Beam, except below a Facing Down Powerbar
- **Cannot** be installed in combination with Bottom Kit for Structural Beam – Standard (JNDBKR) or Bottom Wire Cover for Structural Beam – Standard (JNDBCB)
- Facing Down Bracket is mandatory for installing of the Hook to Structural Beam and includes with an hook
- Two beam applications are available:

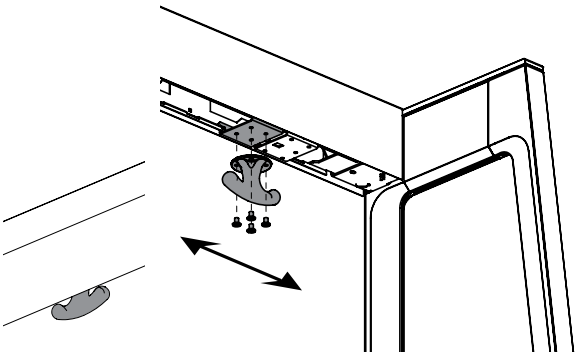

Single-Sided Application
It is recommended to install the hook parallel to the beam to give the both-sides of the hook to the user

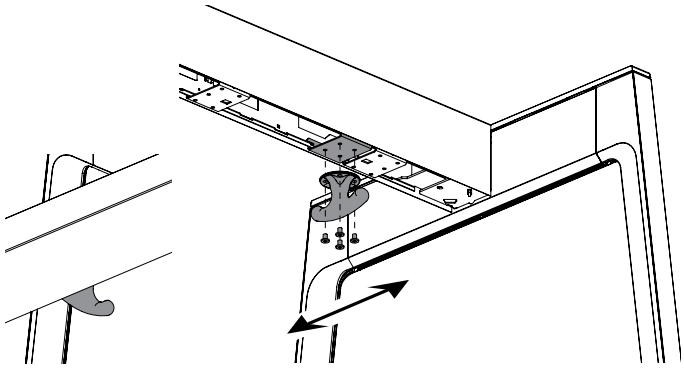

Double-Sided Application
It is recommended to install the hook perpendicular to the beam to give one side of the hook to each user

under worksurface-mounted (W)

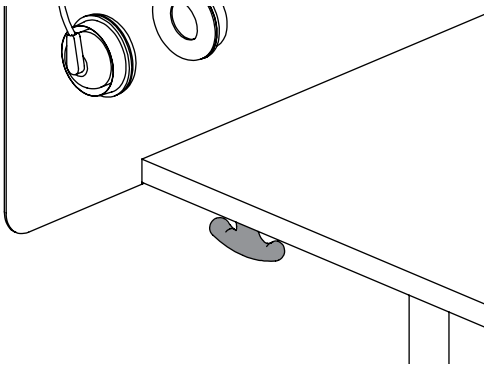

- Can be installed parallel or perpendicular under a solid worksurface:
  - Run-Off for EZ Fence (JZWRF)
  - All Single- or Double-Sided Rectangular Worksurfaces
  - All Peninsula Worksurfaces
  - High Peninsula Worksurface (JNWPH)
  - Height-Adjustable Run-Off – Bevel Base (JNHB)
  - All hiSpace or Navigate Height-Adjustable Tables
  - Beam-Mounted Cabinet – Open (JNBBLO)
  - Lateral Hang-On Cabinet – Open (JNBDLO)
- **Cannot** be placed under Writable Glass Worksurfaces

dry-erase kit & rare earth magnet kit basics

Expansion Cityline offers Dry-Erase Kit and Rare Earth Magnet Kit for use with casual workstation.

Dry-Erase Kit are **not** included with writable tiles or screens. Rare Earth Magnets are **not** included with Metal Elevated Screens. These kits can be specified separately

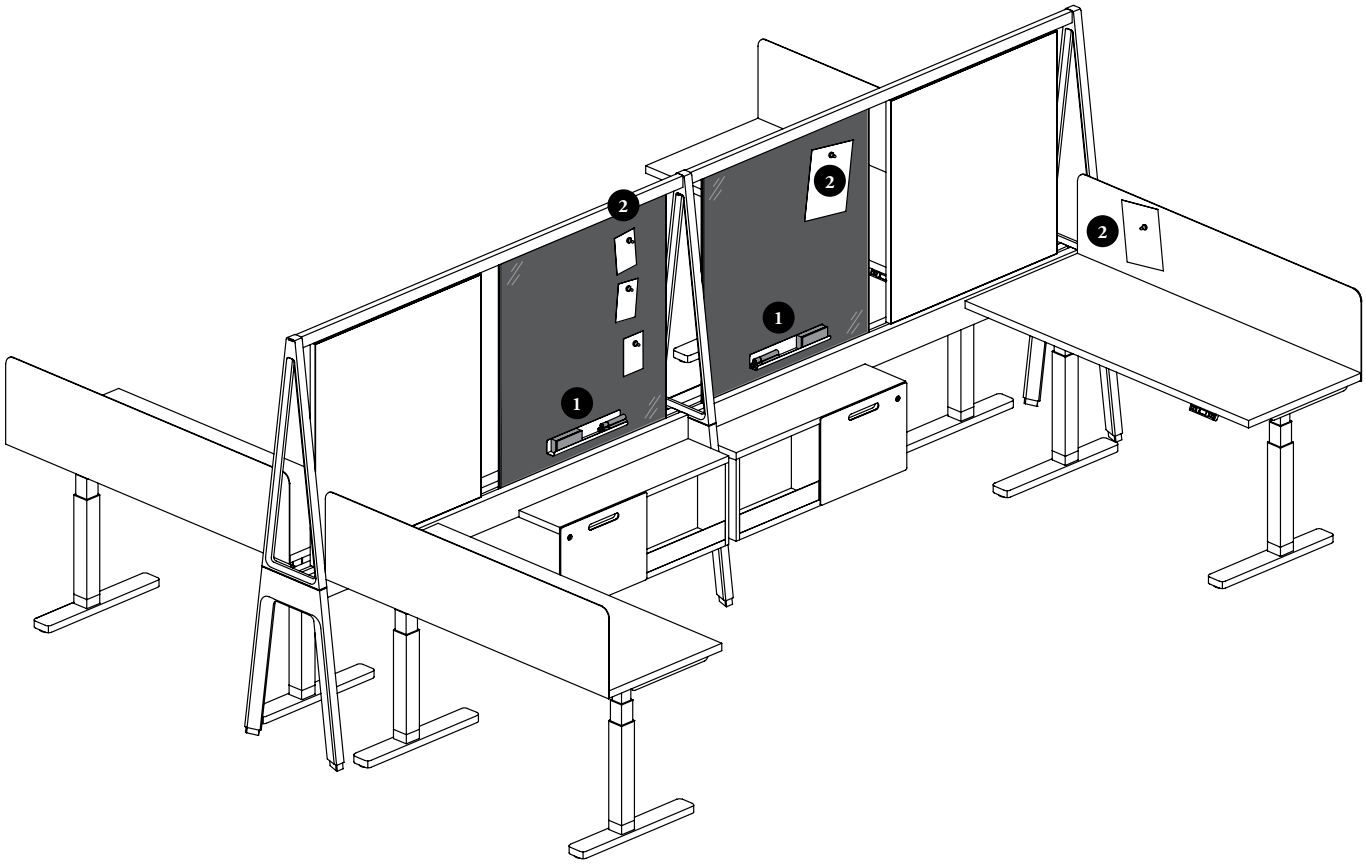

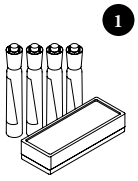

Dry-Erase Kit (JNAEK)

- Includes four Expo Dry-Erase Markers (Red, Blue, Green and Black) and one Expo Eraser
- Can be used with the following markerboard surfaces:
  - Non-Magnetic Clear or Back-Painted Glass
  - Magnetic Back-Painted Glass
  - Whiteboard Writable Paint Metal
- Can be placed into a Markerboard Tray (JNSMT) and can be specified separately. For more details, refer to Casual Screens & Accessories section

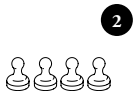

Rare Earth Magnet Kit (JNARM)

- Available with 4 or 24 magnets by kit
- Can be used with the following magnetic surfaces:
  - Magnetic Back-Painted Glass
  - Whiteboard Writable Paint Metal Makerboard
  - Majority of metal paint finishes
- Magnets are finished in Black

lighting, electrics & communications

lighting, electrics & communications

LIGHTING, ELECTRICS & COMMUNICATIONS OVERVIEW 760

LIGHTING BASICS 761

BEAM-MOUNTED POWER & COMMUNICATIONS BASICS. 762

UNDERSTANDING DATA/COMMUNICATIONS. 763

CHICAGO BEAM-MOUNTED POWER & COMMUNICATIONS BASICS . . . 765

UNDERSTANDING CHICAGO DATA/COMMUNICATIONS 766

POWER ENTRY BASICS 770

PLANNING WITH POWER ENTRY. 772

POWER DISTRIBUTION BASICS. 786

CHICAGO POWER DISTRIBUTION BASICS 788

PLANNING WITH POWER DISTRIBUTION 789

POWER DISTRIBUTION FOR HEIGHT-ADJUSTABLE RUN-OFF BASICS . 797

PLANNING WITH STANDARD OR CHICAGO POWER DISTRIBUTION FOR HEIGHT-ADJUSTABLE RUN-OFF. 798

lighting, electrics & communications (continued)

PLANNING WITH STANDARD POWER DISTRIBUTION FOR HEIGHT-ADJUSTABLE RUN-OFF. 799

PLANNING WITH STANDARD POWER DISTRIBUTION FOR HISPACE OR NAVIGATE HEIGHT-ADJUSTABLE TABLES 801

POWER HARNESS LENGTH WITH STANDARD POWER DISTRIBUTION FOR HEIGHT-ADJUSTABLE RUN-OFF 808

WIRING SYSTEMS 811

PLANNING WITH CHICAGO POWER DISTRIBUTION FOR HEIGHT-ADJUSTABLE RUN-OFF. 812

POWER & COMMUNICATIONS MANAGEMENT AND USER ACCESS . . 815

lighting, electrics & communications overview

Expansion Cityline offers a non-directional wiring system that allows for maximum flexibility and simple reconfiguration. Moreover, it offers varieties of data/power access such as direct access under or above worksurface and hidden access under worksurface.

EZ compatible

Desk Structure or EZ Fence Structure use the same electrical components. Only the Power Harness (JNEPH) lenght specification needs to be adapted accordingly

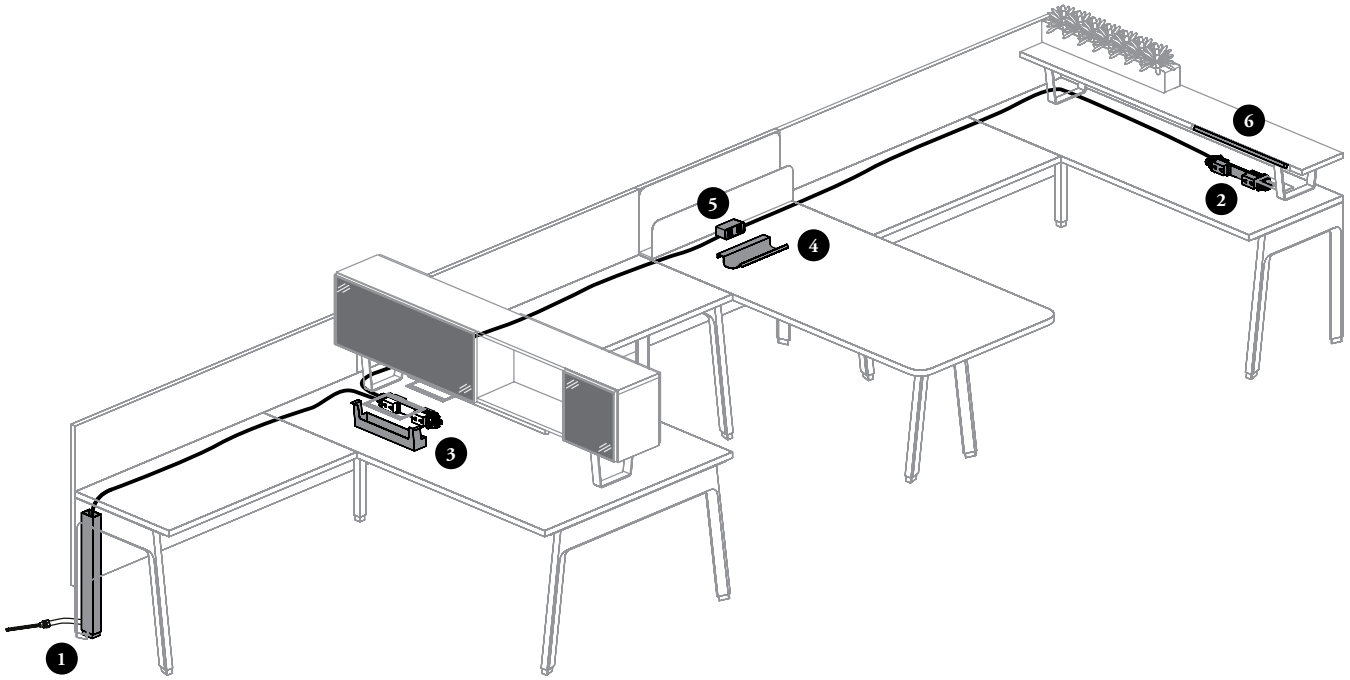

1. **Power** is provided to workstations by a Base Feed (Shown) or Ceiling Feed. Power Feed can be hidden by a Power Pole
2. **Power Boxes** must be mounted on beam cut-out location and Receptacle Outlets must be mounted on Power Box (JNEPB)
3. **Cable Tray for Access Door** can be used underneath worksurfaces to manage extra wires routed through the Access Door
4. **Cable Tray** can be used undeneath worksurfaces to manage Plug-In Power Bar and extra wires routed through grommets
5. **Power Qube** can be mounted on worksurface with square cut-out or underneath worksurface to provide electric/data/USB above or below the worksurface
6. **Linear LED Light** can be mounted on Mounted Storage to provides local task light or ambiance lighting

lighting basics

Expansion Cityline LED strip lighting solution provides energy efficient lighting when mounted-storage is used on the worksurface.

- Check local codes for potential limits or restrictions on products. Local authority approval may be required prior use
- Some jurisdiction require Resettable Breakers. Check local codes
- All dimensions are nominal

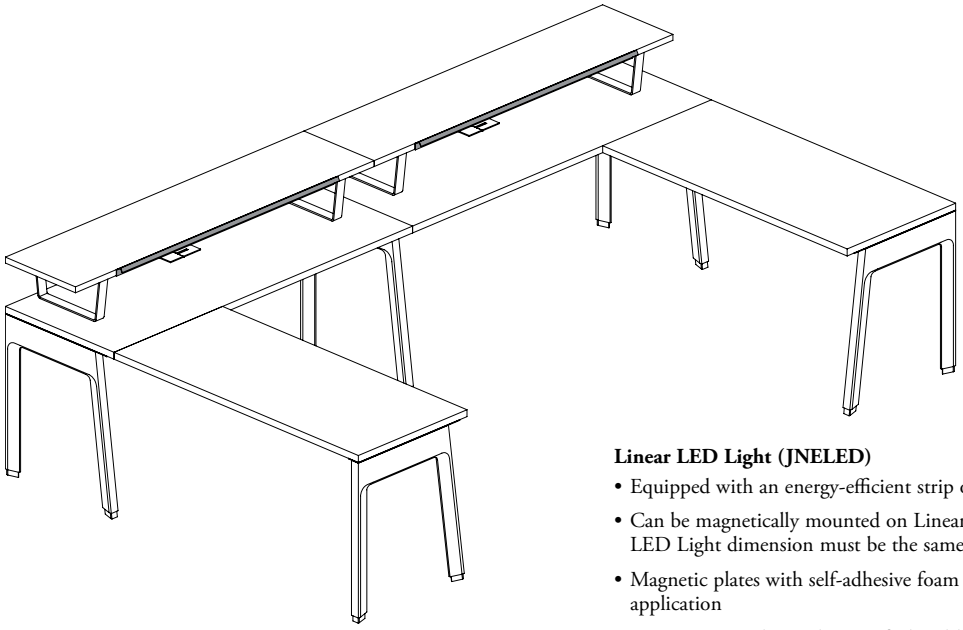

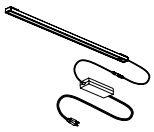

Linear LED Light (JNELED)

- Equipped with an energy-efficient strip of LEDs
- Can be magnetically mounted on Linear LED Light Support (JNASL). Linear LED Light dimension must be the same than Support
- Magnetic plates with self-adhesive foam tape are provided for non-magnetic application
- For storage products, the specified width should be one size smaller than the width between supports of the cabinet to which it will be attached
- This product includes a 72" cord from plug to AC/DC adapter, and 138" from adapter to light
- Made with 95 % of recycled material. Life expectancy of 50 000 hours

Light Finish: Clear Anodized (AC) only

lighting dimension vs storage

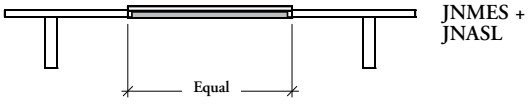

JNMES +
JNASL

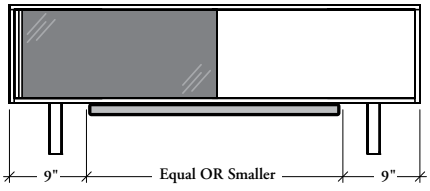

JNMELG
JNMELS
JNMSO

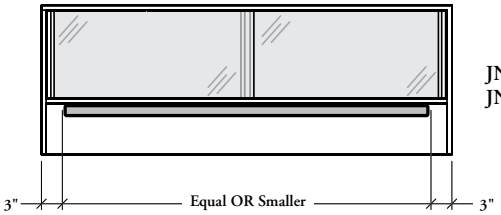

JNMDS
JNMDO

beam-mounted power & communications basics

The following outlines the features of Expansion Cityline Power and Communications products.

Check local codes for potential limits or restrictions on products. Local authority approval may be required prior use

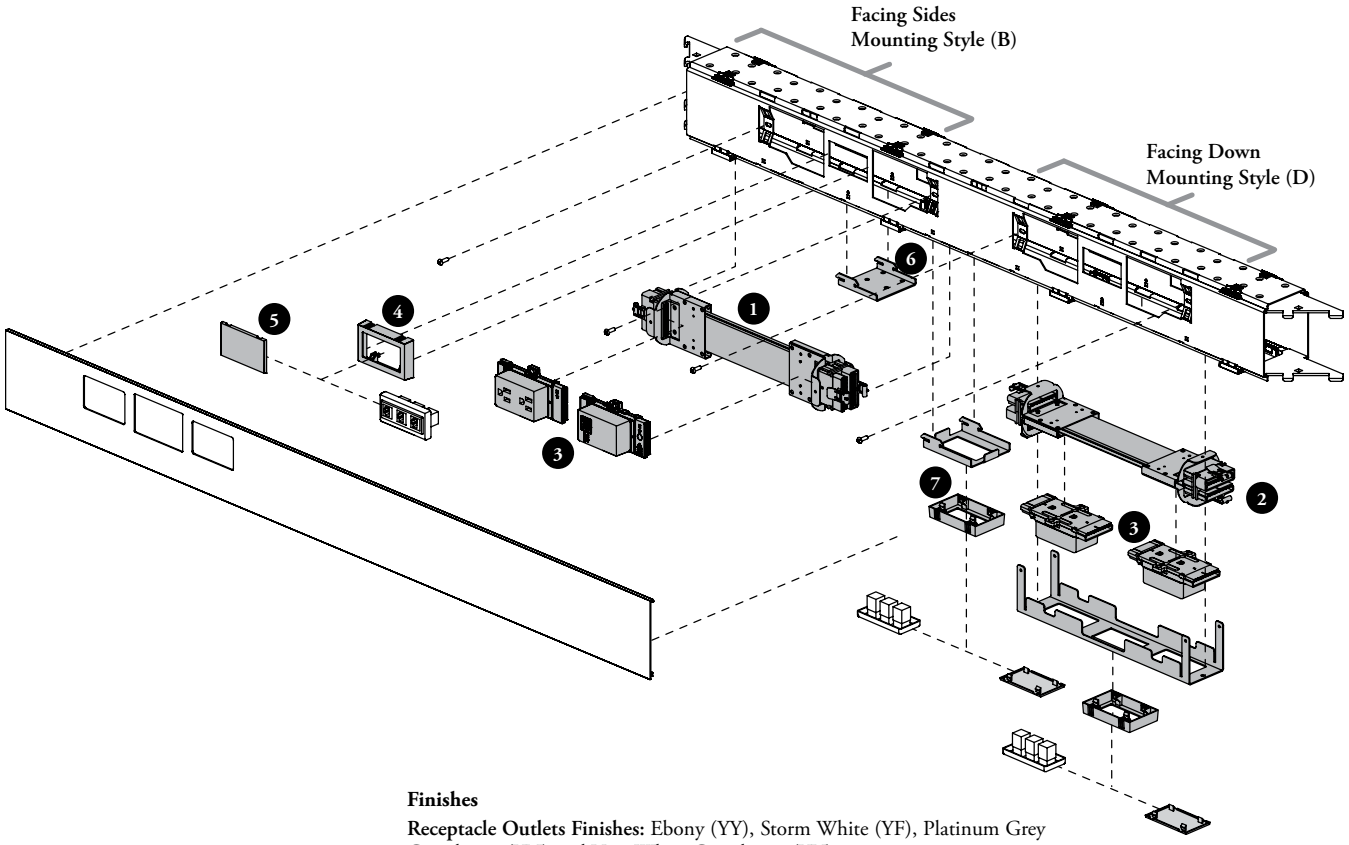

Finishes

Receptacle Outlets Finishes: Ebony (YY), Storm White (YF), Platinum Grey Coordinate (YN) and Very White Coordinate (YV)
Facing Down Communication Box Finishes: Ebony (YY), Storm White (YF), Platinum Grey Coordinate (YN) and Very White Coordinate (YV)
Communication Blank Plate Finishes: Ebony (YY), Storm White (YF), Platinum Grey Coordinate (YN) and Very White Coordinate (YV)
Communication Extender Plate Finishes: Ebony (YY), Storm White (YF), Platinum Grey Coordinate (YN) and Very White Coordinate (YV)

1. **Power Box – Facing Sides (JNEPBB)** is universal for single- and double-sided applications. Mounted inside the beam at cut-out location and allows mounting up to four Receptacle Outlets (JNEPRO), two on each side. Offers a 7- or 8-Wire Isolated Ground (7T or 8T) or 7- or 8-Dual Isolated (7K or 8K) circuits. Offers Standard (S) or PVC free (V) option. Positions on structural beam are **not** all available depending on beam width. Refer to Desk Structures or EZ Fence Structure section for details
2. **Power Box – Facing Down (JNEPBD)** provides access to power under the structural beam or EZ Fence Beam. Mounts inside the beam at cut-out location and allows mounting up to two Receptacle Outlets (JNEPRO). Offers a 7- or 8-Wire Isolated Ground (7T or 8T) or 7- or 8-Dual Isolated (7K or 8K) circuits. Allows the mounting of a modular furniture adapter (**not** included) with modular jacks (**not** included) when data cable routing is done at the same time than Power Box installation. Communication Extender Plate (JNEDE) must be ordered separately
3. **Receptacle Outlets (JNEPRO)** are mounted onto Power Box (JNEPB) and provide power or USB charging to workstation
4. **Communication Extender Plate (JNEDE)** is mounted on beam data cut-out or on Power Box – Facing Down Mounting Bracket. Mandatory only when used with Structural Beam Cover – Side (JNDBCS), EZ Fence Beam, or with CAT6 jacks. Allows the mounting of modular furniture adapter (**not** included) with modular jacks (**not** included) or Communication Blank Plate (JNECBP) if data is **not** required
5. **Communication Blank Plate (JNECBP)** is used when no data access is required. Can be mounted directly on Structural Beam (JNDBB), on EZ Fence Beam (JZSBB or JZSBS) or on Communication Extender Plate (JNEDE)
6. **Facing Down Brackets** are included with Structural Beam (JNDBB) or EZ Fence Beam (JZSBB or JZSBS) and retain wires inside structural beam
7. **Facing Down Communication Box (JNECDB)** is mounted under the beam and provides data access. Communication Extender Plate is included to protect modular jack (**not** included) connections.

understanding data/communications

Expansion Cityline uses Desk Structure or EZ Fence Structure to run electric and data/communication cables through the workstations. Structural Beam is the main component that allows wire management and installation of power and data access for users.

Check local codes for potential limits or restrictions on products. Local authority approval may be required prior use

structural beam or ez fence beam data/communication cable capacity

40% empty space should be considered to ensure future workstations expansion and routing wires in tight corners

facing sides mounting style (B)

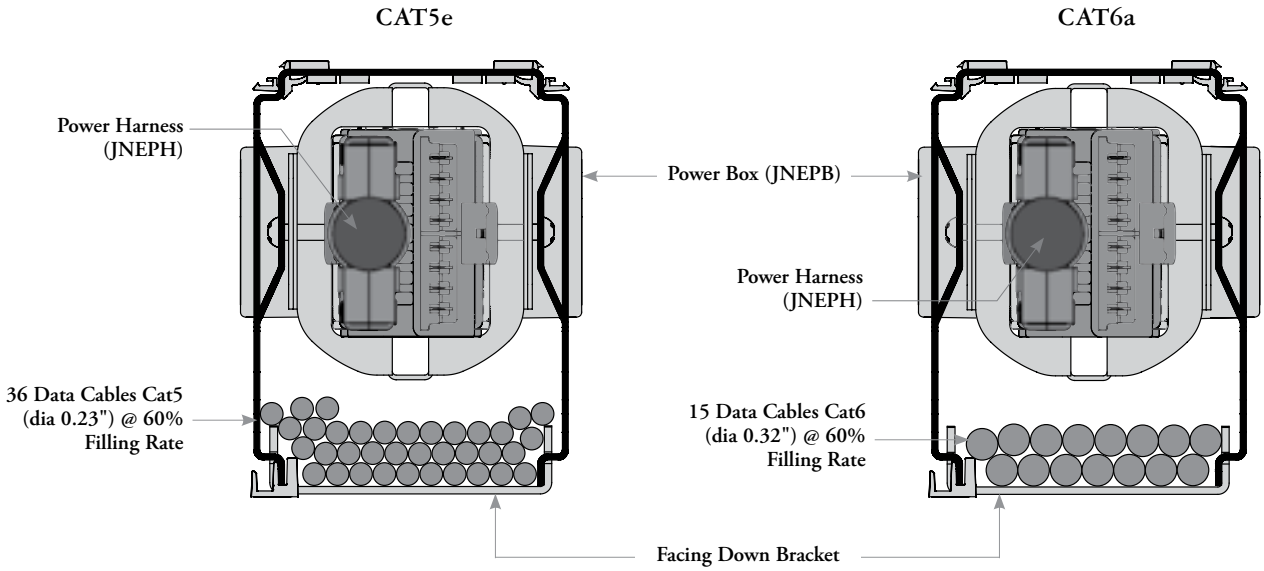

facing down mounting style (D)

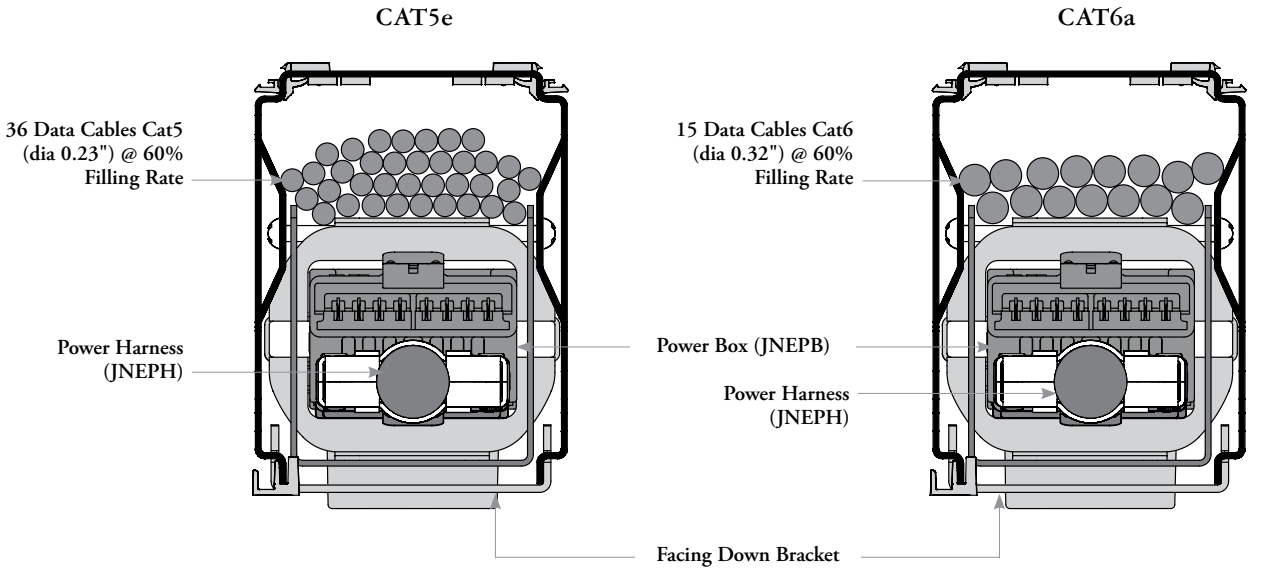

understanding data/communications (continued)

structural beam or ez fence beam data/communication cut-out

Structural Beam and Power Module – Facing Down Mounting Bracket data/communication cut-out allows the installation of Voice/Data faceplates (**not** included) and jacks (**not** included), Communication Extender Plates (JNEDE) or Data Covers and Voice/Data Adapters of USB/Data Faceplate Kit (JNECFK)

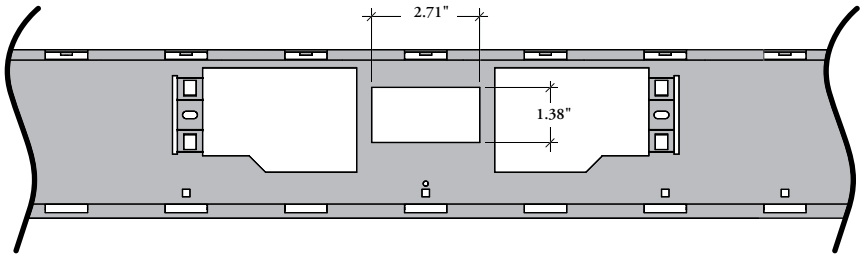

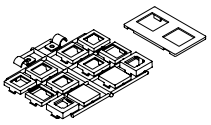

USB/Data Faceplate Kit (JNECFK)

- Features Data Cover and Voice/Data Adapters
- Can accommodate up to two voice/data ports
- Can be installed on following products:
  - Structural Beam (JNDBB) or EZ Fence Beam (JZSBB or JZSBS)
  - Facing Down Communication Box (JNEDCB)
  - Communication Extender Plate (JNEDE)
  - Communication Box (JNECB)
  - Power Qube (JNEPC)

Faceplate Finish: Platinum Grey Coordinate (YN)*
* Matches with standard grey simplex

facing sides mounting style (B)

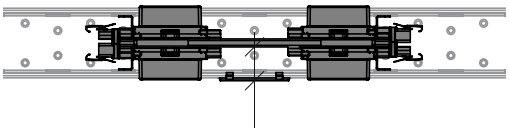

1.75"
without Communication Extender Plate (JNEDE)

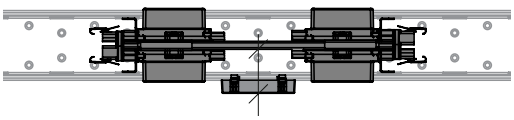

2.4"
with Communication Extender Plate (JNEDE)

Top View

facing down mounting style (D)

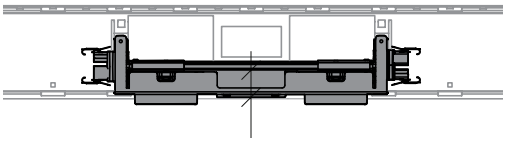

1,125"
without Communication Extender Plate (JNEDE)
(Not recommended)

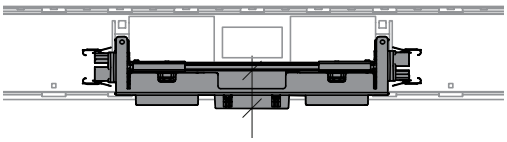

1,8"
with Communication Extender Plate (JNEDE)

Side View

chicago beam-mounted power & communications basics

The following outlines the features of Expansion Cityline Power and Communications for Chicago products.

Check local codes for potential limits or restrictions on products. Local authority approval may be required prior use

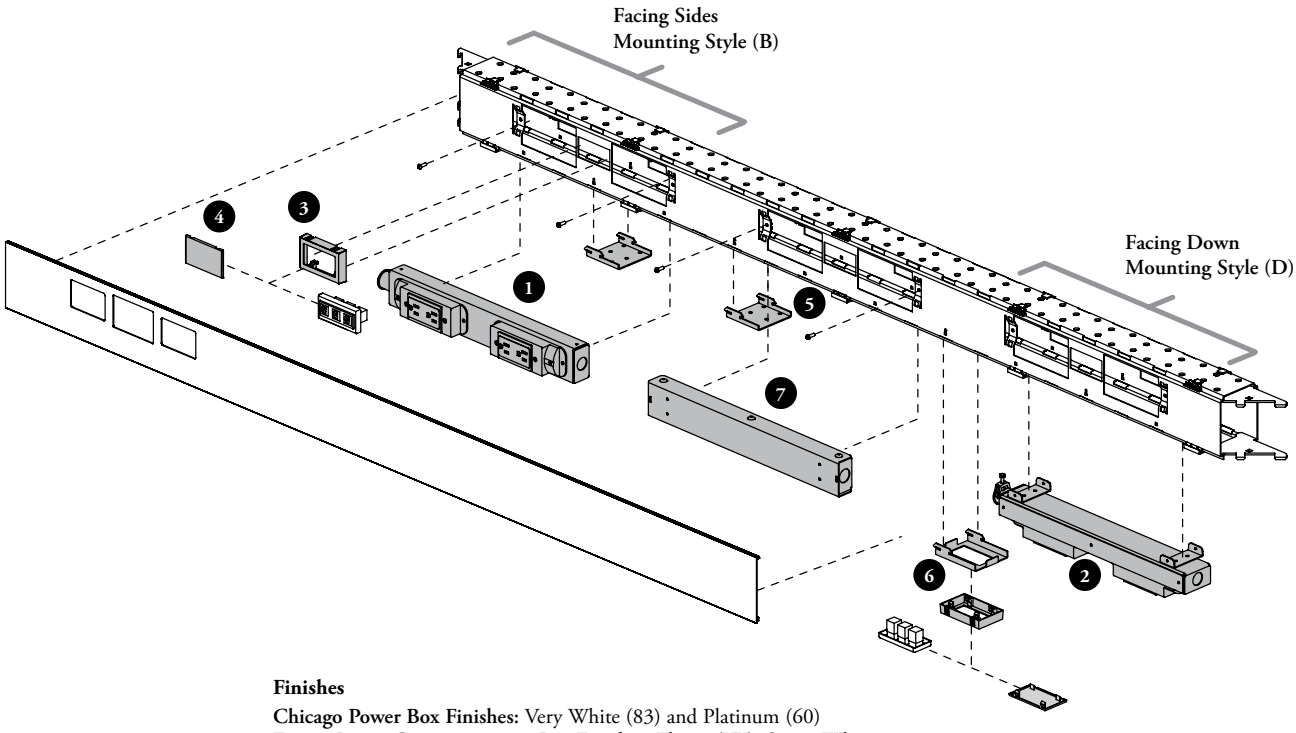

Finishes

Chicago Power Box Finishes: Very White (83) and Platinum (60)
Facing Down Communication Box Finishes: Ebony (YY), Storm White (YF), Platinum Grey Coordinate (YN) and Very White Coordinate (YV)
Communication Blank Plate Finishes: Ebony (YY), Storm White (YF), Platinum Grey Coordinate (YN) and Very White Coordinate (YV)
Communication Extender Plate Finishes: Ebony (YY), Storm White (YF), Platinum Grey Coordinate (YN) and Very White Coordinate (YV)
Chicago Junction Box Finishes: Recycled Paint

1. **Chicago Power Box – Facing Sides (JNECPBB)** must be specified for single- and double-sided applications. Mounts inside the beam at cut-out location. Single-sided configuration includes two outlets and double-sided configuration includes four outlets but **does not** include any connection*. Positions on structural beam are **not** all available depending on beam width. Refer to Desk Structures or EZ Fence Structure section for details
2. **Chicago Power Box – Facing Down (JNECPBD)** provides access to power under the Chicago Structural Beam or Chicago EZ Fence Beam. Mounts inside the beam at cut-out location and comes with two receptacle outlets offer in Standard 15 amp (S), T-Slot 20 amp (T), Controlled 15 amp (D) or Controlled 20 amp (E).
3. **Communication Extender Plate (JNEDE)** is mounted on beam data cut-out. Mandatory only when used with Structural Beam Cover – Side (JNDBCS), Chicago EZ Fence Beam or with CAT6 jacks in facing down application. Allows the mounting of modular furniture adapter (**not** included) with modular jacks (**not** included) or Communication Blank Plate (JNECBP) if data is **not** required
4. **Communication Blank Plate (JNECBP)** is used when no data access is required. Can be mounted directly on Chicago Structural Beam (JNDCB), on Chicago EZ Fence Beam (JZSCB or JZSCS) or on Communication Extender Plate (JNEDE)
5. **Facing Down Brackets** are included with Chicago Structural Beam (JNDCB) or Chicago EZ Fence Beam (JZSCB or JZSCS) and retain wires inside structural beam
6. **Facing Down Communication Box (JNECDB)** is mounted under the beam and provides data access. Communication Extender Plate is included to protect modular jack (**not** included) connections
7. **Chicago Junction Box (JNECJB):**
   - Mounted inside the Chicago beam at cut-out location
   - Can be used as a Chicago Junction Box to split the power to up to 3 outs
   - Can be used to connect up to two Chicago Power Module – Storage for Height-Adjustability (JNECPH) and allows to continue the power distribution through workstations
   - Module **does not** include any connector
   - Electrical connections must be done on-site by a certified electrician
   - Each end as a 1/2" trade size knockout and two additional on one face

* Receptacle outlets are duplexes offered in Standard 15 amp (S), T-Slot 20 amp (T), Controlled 15 amp (D) or Controlled 20 amp (E).

understanding chicago data/communications

Expansion Cityline uses Desk Structure or EZ Fence Structure to run Chicago electric and data/communication cables through the workstations. Chicago Structural Beam is the main component that allows wire management and installation of power and data access for users.

Check local codes for potential limits or restrictions on products. Local authority approval may be required prior use

chicago structural beam or chicago ez fence beam data/communication cable capacity

40% empty space should be considered to ensure future workstations expansion and routing wires in tight corners

facing sides mounting style (B)

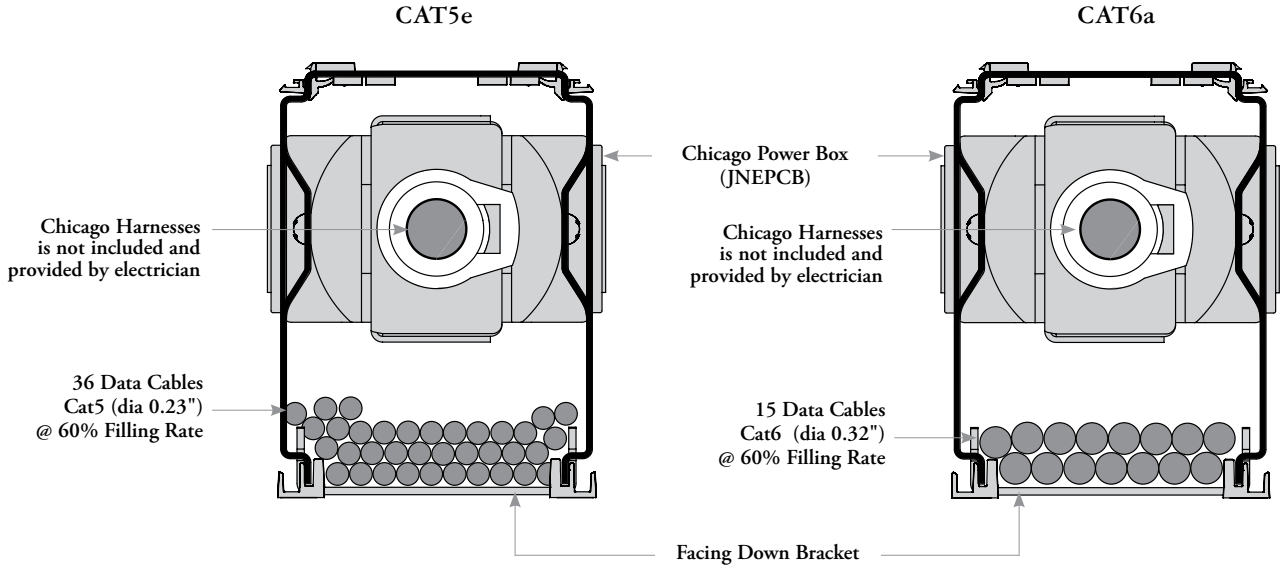

facing down mounting style (D)

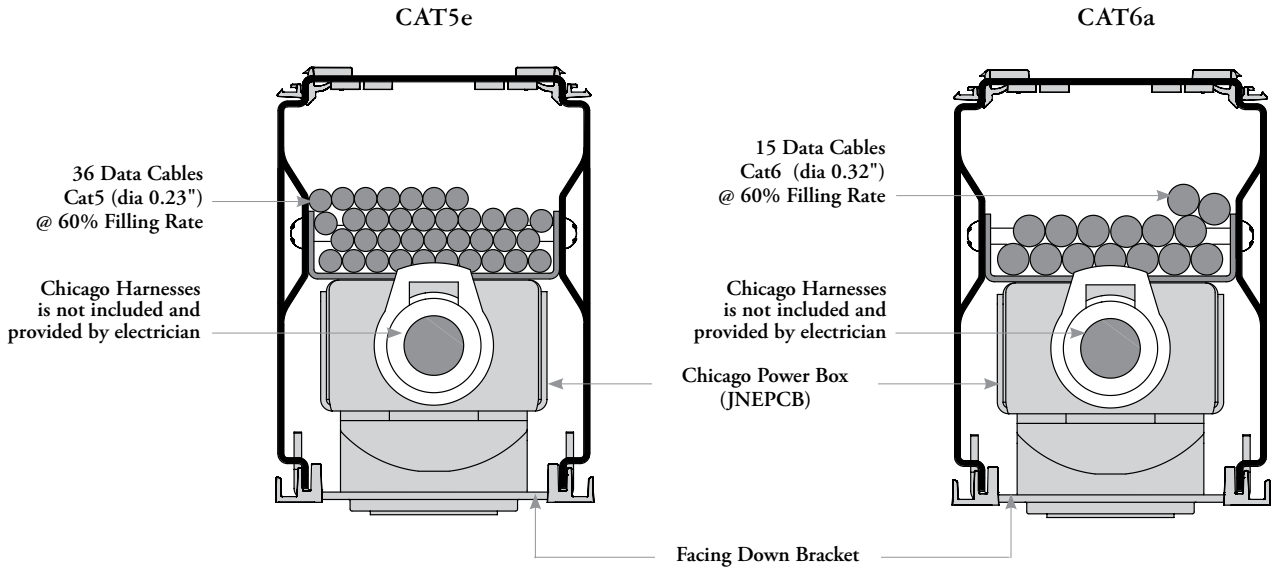

understanding chicago data/communications (continued)

chicago structural beam or chicago ez fence beam data/communication cut-out

Chicago Structural Beam data/communication cut-out allows the installation of Voice/Data faceplates (**not** included) and jacks (**not** included), Communication Extender Plates (JNEDE) or Data Covers and Voice/Data Adapters of USB/Data Faceplate Kit (JNECFK)

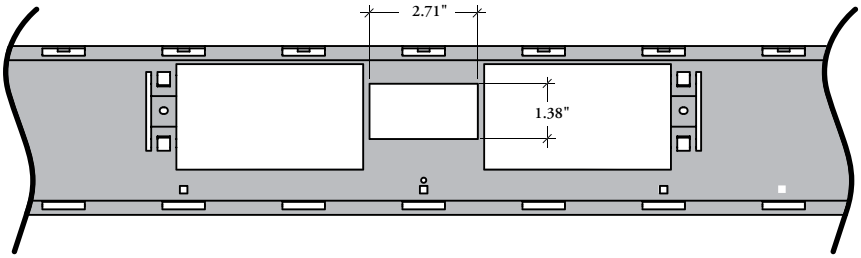

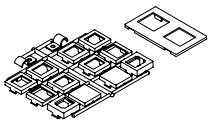

USB/Data Faceplate Kit (JNECFK)

- Features Data Cover and Voice/Data Adapters
- Can accommodate up to two voice/data ports
- Can be installed on following products:
  - Chicago Structural Beam (JNDCB) or Chicago EZ Fence Beam (JZSBS or JZSCS)
  - Facing Down Communication Box (JNEDCB)
  - Communication Extender Plate (JNEDE)
  - Communication Box (JNECB)
  - Power Qube (JNEPC)

Faceplate Finish: Platinum Grey Coordinate (YN)*
* Matches with standard grey simplex

facing sides mounting style (B)

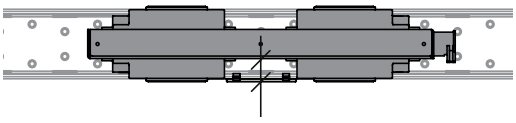

0,9"
without Communication Extender Plate (JNEDE)
(Not Recommended)

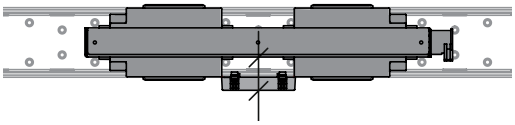

1,5"
with Communication Extender Plate (JNEDE)

Top View

facing down mounting style (D)

- The Chicago Power Box – Facing Down **does not** allow the installation of any data/communication plate

- Only the Facing Down Communication Box (JNECDB) can be specified to allow access to data/communications under the beam
- **Not** compatible with Suspended Credenza, Semi-Suspended Credenza, Bag Drop, Side Tray Beam-Mounted Accessories and EZ Suspended Credenzas

understanding data/communications (continued)

structural or chicago structural beam – facing sides (B)

Fully concealed and exposed structural beam applications allow many possibilities to provide Communication/Data/Voice/USB access to users; see examples below

without structural beam cover

short modular jacks

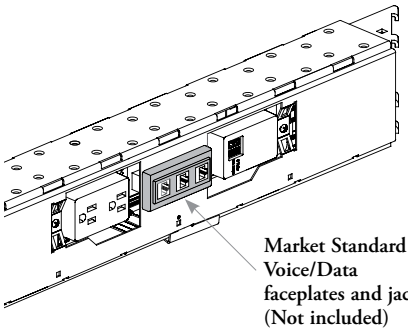

Not Recommended with Chicago Power Box

long modular jacks

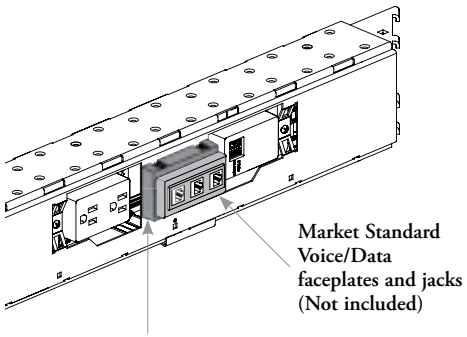

data/USB faceplate – short

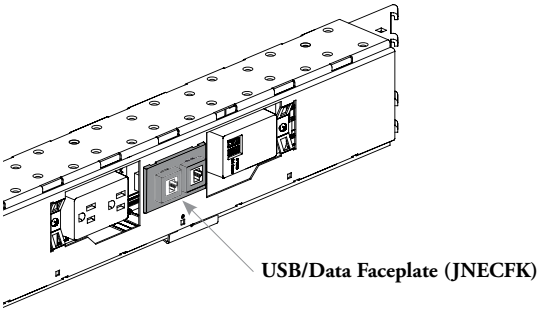

Not Recommended with Chicago Power Box

data/USB faceplate – long

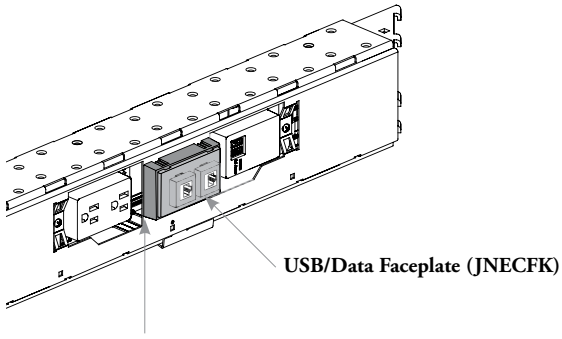

with structural beam cover or ez fence beam

market standard data/
voice adapters

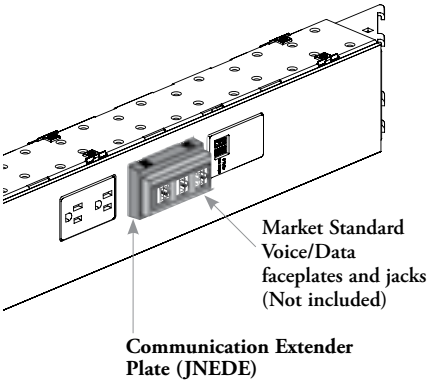

USB/data faceplate

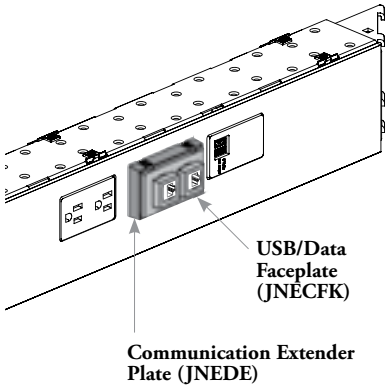

blank

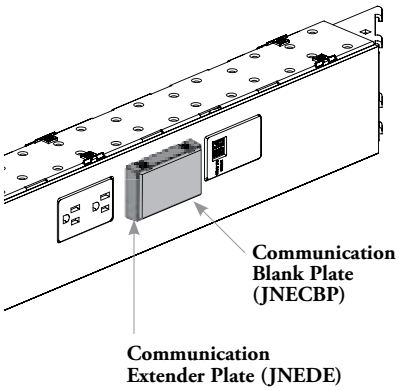

understanding data/communications (continued)

structural beam or ez fence beam – facing down (D)

short modular jacks

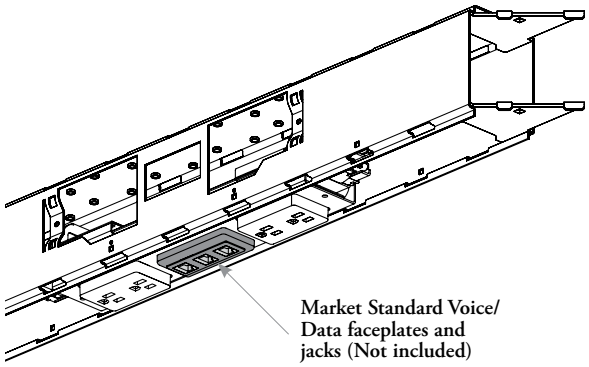

Not Recommended

long modular jacks

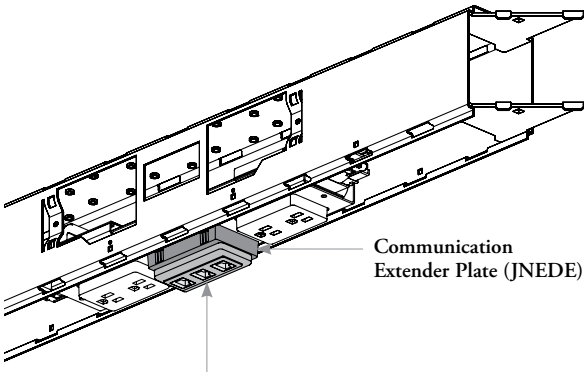

chicago structural beam or ez fence beam – facing down (D)

short or long modular jacks

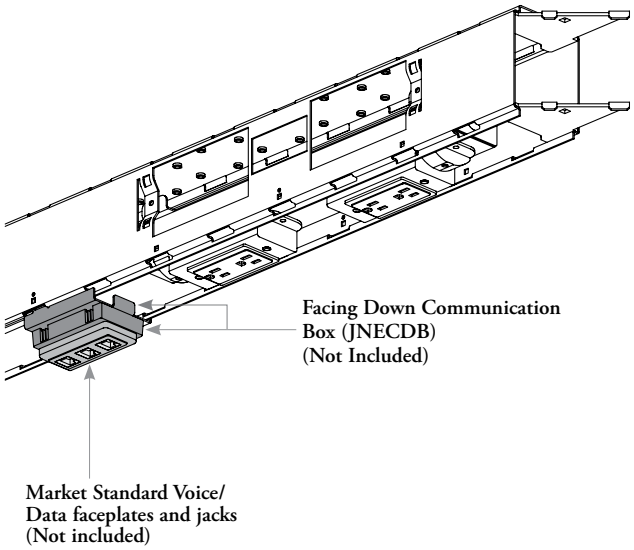

Voice/Data Faceplates and Communication Extender Plate (JNEDE) **cannot** be mounted on Chicago facing down bracket. The Facing Down Communication Box (JNECDB) must be used to give access to data/voice under the beam

power entry basics

Power can enter into Expansion Cityline Desk Structure or EZ Fence Structure from either a Base Feed or a Ceiling Feed. Both can be aesthetically covered by a Power Pole or a Wrap Around Cable Manager. A Split Base Feed can also be used but can only be partially covered by a Wrap Around Cable Manager.

Check local codes for potential limits or restrictions on products. Local authority approval may be required prior use

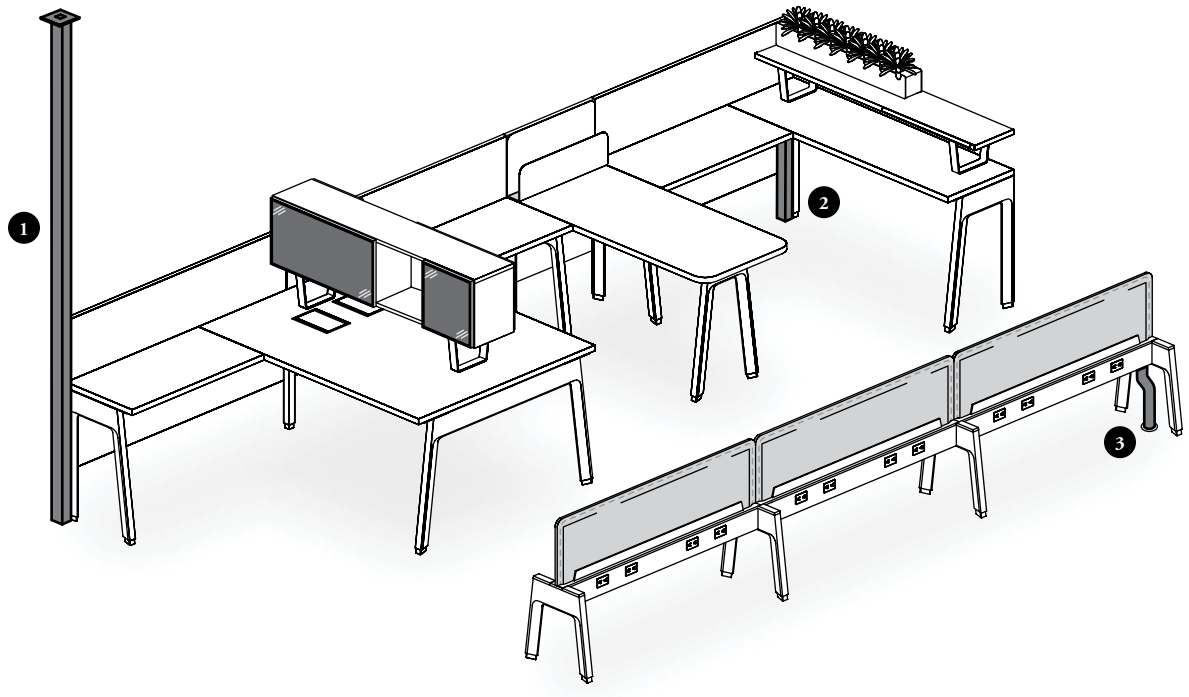

1. 96" to 144" high Power Poles can route a Ceiling Feed (JNEPCF) and data cables from the ceiling to the workstation
2. 29" high Power Pole can route a Base Feed (JNEPBF) and data cables into workstation from the floor
3. 28" long Wrap Around Cable Manager (JNEWAC) and data cables into workstation from the floor

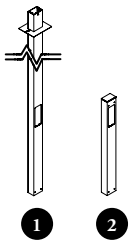

Power Pole (JNEWPP) EZ compatible

- Connected to the desk structure or EZ Fence Structure routes a Base or Ceiling Feed and data cables into workstation.
- Available with Floor Screen, Structural Leg/Beam or Low Structural Leg/Beam mounting option
- This product is available 29" high for Base Feed and 96", 120" and 144" high for Ceiling Feed

Finishes: Foundation, Mica and Accent

Wrap Around Cable Manager (JNEWAC) EZ compatible

- Offers maximum flexibility especially when the feed location is unknown
- Wraps around and routes power and data cables from floor to workstation or from freestanding height adjustable table to workstation
- Available in Base Feed (B) configuration in lengths of 28" or 38"
- Available in Height-Adjustable Table (H) configuration in lengths of 42" or 52"

Finishes: Black (B) and Grey (G)

power entry basics (continued)

All feeds come with a mesh end for maximum flexibility in structural beam

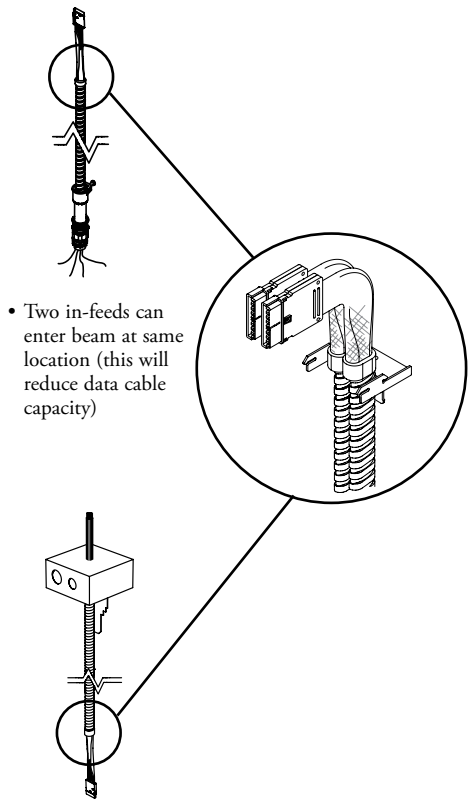

- Two in-feeds can enter beam at same location (this will reduce data cable capacity)

Base Feed (JNEPBF) EZ compatible

- Connects to the building supply. Routes power from the floor into desk structure, then on a Power Box (JNEPB), a Four-Way Splitter (JNEPDB) or an I-Connector (JNEPIC)
- Wire systems include:
  - 7-Wire Dual Non Isolated (7K)
  - 7-Wire Non Isolated Ground (7T)
  - 8-Wire Isolated Ground (8T)
  - 8-Wire Dual Isolated (8K)
- This product is available in 36" and 72" watertight cord length to be cut on-site
- Offered in Standard (S) or PVC Free (V) option

Ceiling Feed (JNEPCF) EZ compatible

- Includes a junction box to connect to the building supply. Routes power from the ceiling into desk structure, then on a Power Box (JNEPB), a Four-Way Splitter (JNEPDB) or an I-Connector (JNEPIC)
- Wire systems include:
  - 7-Wire Dual Non Isolated (7K)
  - 7-Wire Non Isolated Ground (7T)
  - 8-Wire Isolated Ground (8T)
  - 8-Wire Dual Isolated (8K)
- This product is available in 96", 120" and 144" cord length
- Offered in Standard (S) or PVC Free (V) option

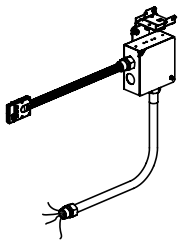

Split Base Feed (JNESBF) EZ compatible

- Same as the Base Feed, except that its hard wire is split in a junction box for New York city wiring requirements
- Junction box comes with mounting bracket which must be installed under the structural beam
- Wire systems include:
  - 7-Wire Dual Non Isolated (7K)
  - 7-Wire Non Isolated Ground (7T)
  - 8-Wire Isolated Ground (8T)
  - 8-Wire Dual Isolated (8K)
- This product is only available in 36" and 72" watertight cord length to be cut on-site
- Offered in Standard (S) or PVC Free (V) option

planning with power entry

The following should be considered when planning power entry in Expansion Cityline.

base feed and ceiling feed configuration

Standard infeeds installed at one end of structural beams can only reach the next power cut-out location

directly on power box

facing sides

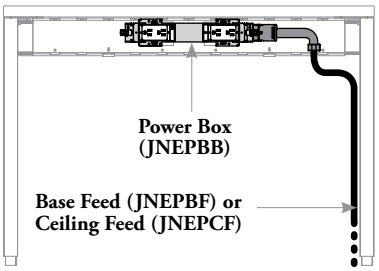

Structural Beam 30" – 42"

facing down

Infeeds must be installed at least 12" away from the centre of the Facing Down Power Module

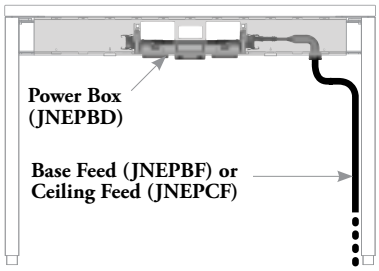

Structural Beam 36" – 42"

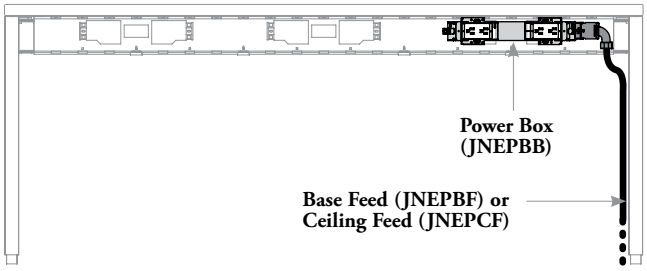

Structural Beam 48" – 84"

Infeeds **cannot** be installed at the first Facing Down Power Module location

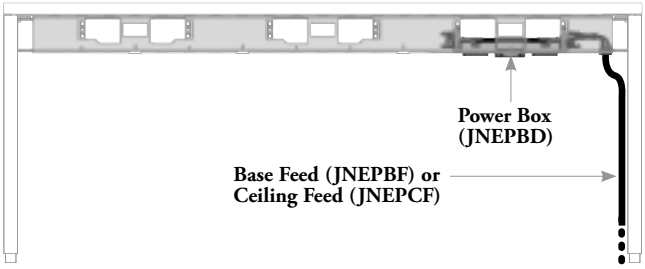

Structural Beam 30" and 48" – 84"

planning with power entry (continued)

base feed and ceiling feed configuration (continued)

Reaching other power locations can be accomplished by adding an I-Connector (JNEPIC) or a Four-Way Splitter (JNEPDB) to lengthen the infeed with a Power Harness (JNEPH). For Power Harness length, refer to Power Distribution in this section

on i-connector or four-way splitter

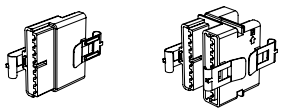

facing sides

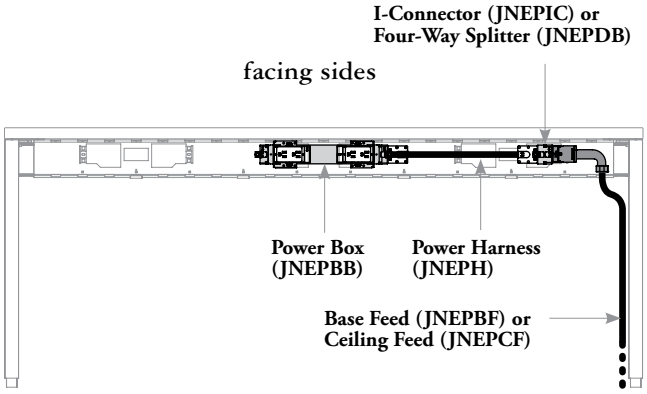

facing down

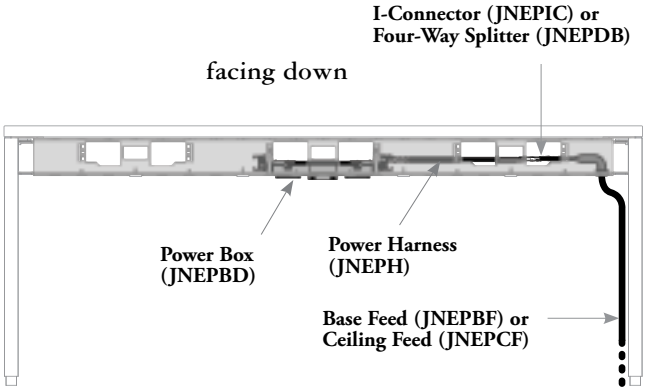

Structural Beam 48" – 84"

Reaching other power locations can also be achieved by installing the infeeds elsewhere along the beam

installed along the beam

facing sides

Infeeds must be installed from 9" to 18" away from the centre of the Facing Sides Power Module

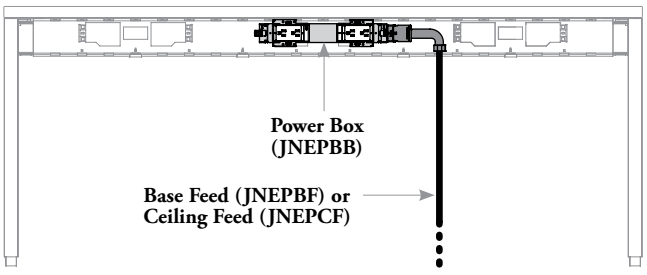

Structural Beam 36" – 84"

facing down

Infeeds must be installed from 12" to 18" away from the centre of the Facing Down Power Module

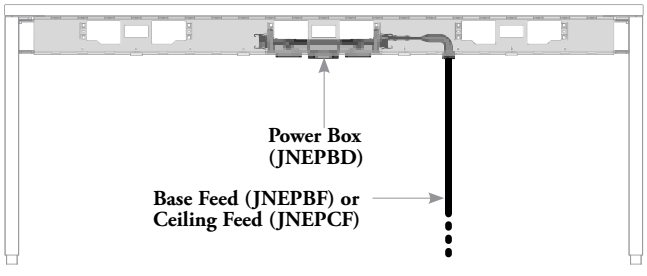

Structural Beam 42" – 84"

planning with power entry (continued)

split base feed configuration

Split Base Feeds installed at one end of structural beams can only reach the next power cut-out location

directly on power box

facing sides

Junction box must be installed underneath the Facing Sides Power Module

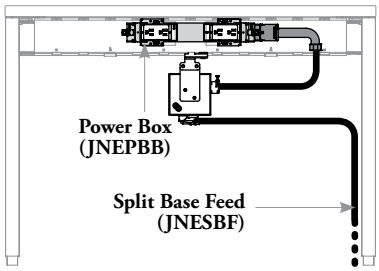

Structural Beam 30" – 42"

facing down

Junction box must installed next to the Facing Down Power Module

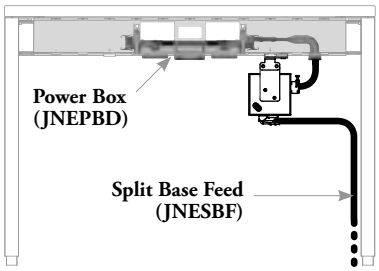

Structural Beam 42"

Junction box must be installed underneath the Facing Sides Power Module

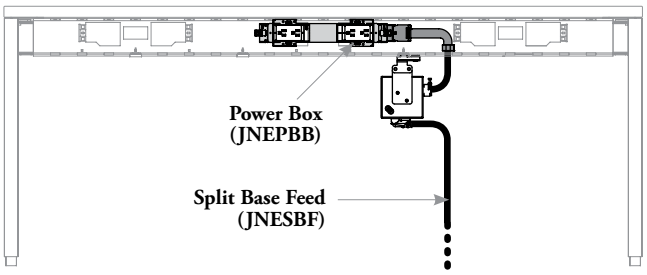

Structural Beam 48" – 84"

Junction box or cable blocks the access to the Facing Down Power Module

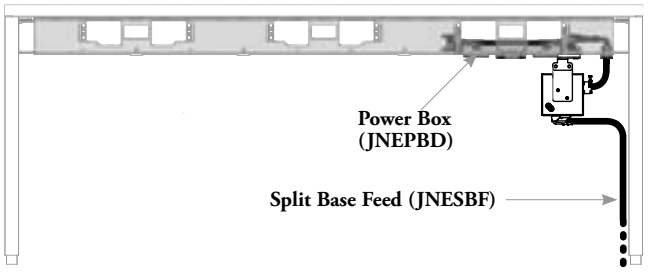

Structural Beam 30" – 36" and 48" – 84"

planning with power entry (continued)

split base feed configuration (continued)

Reaching other power locations can be accomplished by adding an I-Connector (JNEPIC) or a Four-Way Splitter (JNEPDB) to lengthen the infeed with a Power Harness (JNEPH). For Power Harness length, refer to Power Distribution in this section

on i-connector or four-way splitter

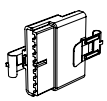

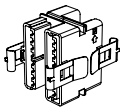

facing sides

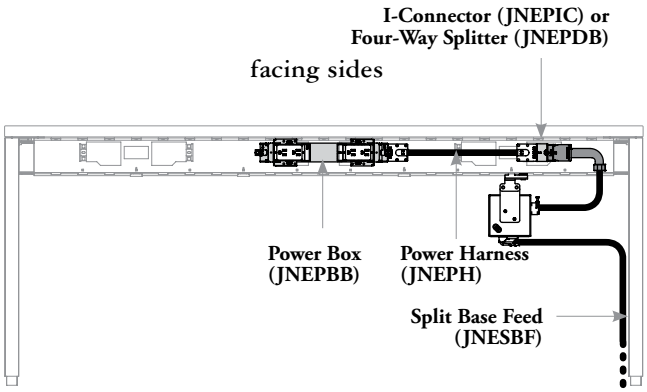

facing down

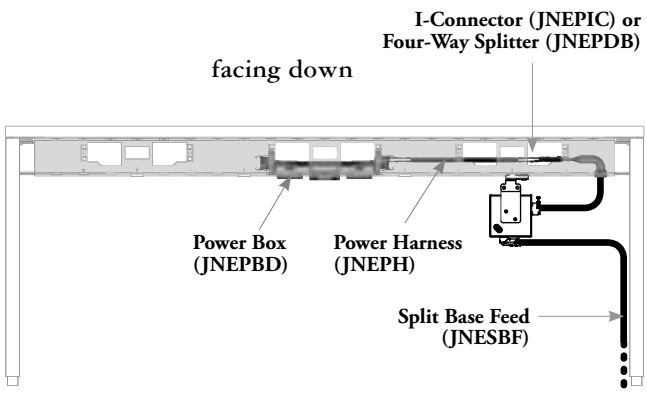

Structural Beam 48" – 84"

Reaching other power locations can also be achieved by installing the split base feed elsewhere along the beam

installed along the beam

facing sides

Junction box must be installed from 0" to 18" away from the center of the Facing Sides Power Module

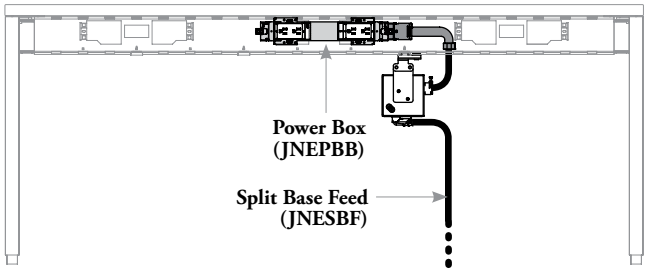

facing down

Junction box must be installed from 9" to 18" away from the center of the Facing Down Power Module

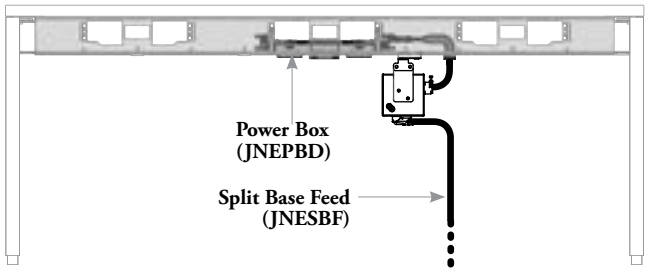

Structural Beam 48" – 84"

planning with power entry (continued)

power pole with base feed – mounting option

- Available in 29" nominal height
- Available in two mounting options: Floor Screen (G) and Structural Leg/Beam (S)
- Power Pole will **not** interfere with Suspended Credenzas (JNBSF, JNBDF, JNBSO, JNBDO, JNBSOO, JNBDOO, JNBSC, JNBDC). However it will interfere with EZ Suspended Storage (JZBSO, JZBDO, JZBFF)

floor screen mounting option

- When Power Pole is used Floor Screens (JNSFSB, JNSFSW, JNSFGB, JNSFGW, JNSFSL, JNSFGO) and/or Floor Screen with Metal Towers – Leg-Mounted – One User (JNSFOL, JNSFDL, JNSFTL), the Pass-Through option must be specified accordingly. Refer to the Workstation Screens, Leg-Mounted Screens & Desk Structures sections for details
- **Not** compatible with double overlay floor screens over 84" wide
- When Floor Screen (G) mounting option is specified, Power Pole comes with a top cover
- Power Poles are also compatible with Beam Towers – End Position when specified with the Pass-Through option

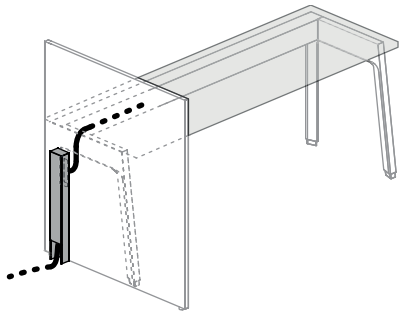

Floor Screen & Floor Screen with Metal Tower – Single-Sided

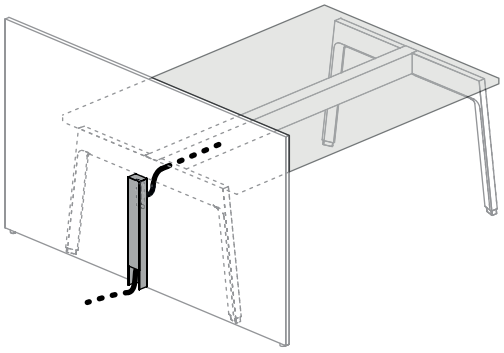

Floor Screen – 84" width or less Double Overlay

planning with power entry (continued)

power pole with base feed – mounting option (continued)

structural leg/beam-mounting option

- When used with Structural Beam (JNDBB), Structural Post (JNDPU), Structural Post with Front Leg (JNDPF), Structural Legs (JNDLS, JNDLD, JNDLF), Power Pole comes with an extension cover to fit with the levelling range of any Expansion Cityline supports
- Needs a beam for attachment. At 29" high, the Power Pole **cannot** be mounted to Legs or Posts
- Can be installed at each 3" increment of Structural Beam or EZ Fence Beam for an off-module application
- The on-module position is **not** available with Facing Down Power Box mounted in the Left or Right position
- **Not** available for Low Fence application

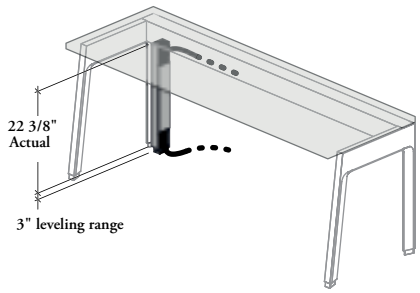

Beam On-Module – Single-Sided

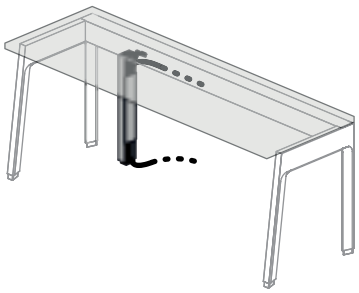

Beam Off-Module

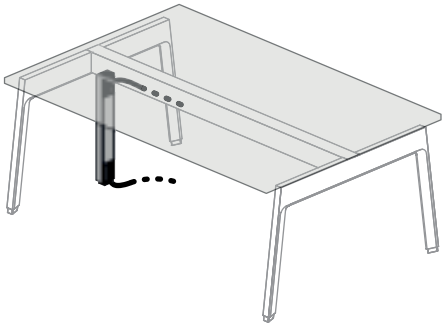

Beam On-Module – Double-Sided

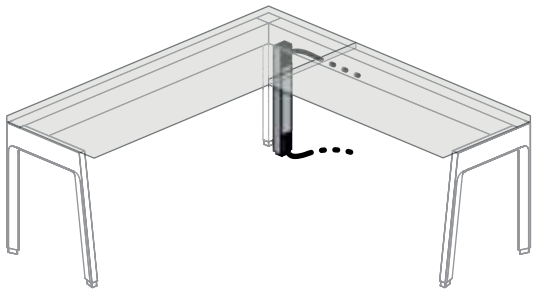

Beam On-Module – Beam Junction

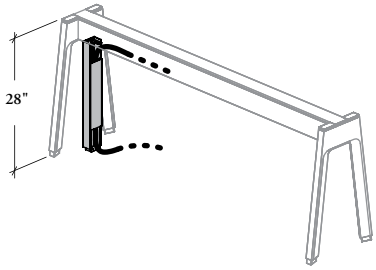

Fence – Standard Height

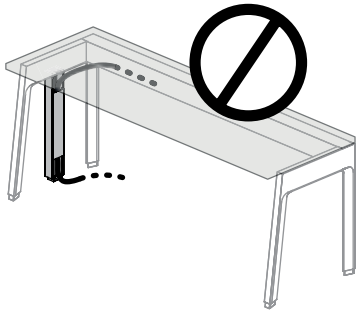

Leg

planning with power entry (continued)

power pole with ceiling feed – mounting option

- Available in 96", 120", 144" nominal heights
- Available in three mounting options: Floor Screen (G), Low Structural Leg/Beam (L) and Structural Leg/Beam (S)

floor screen mounting option

- When Power Pole is used with Floor Screens (JNSFSB, JNSFSW, JNSFGB, JNSFGW, JNSFSL, JNSFGO) and/or Floor Screen with Metal Towers – Leg-Mounted – One User (JNSFOL, JNSFDL, JNSFTL), the Pass-Through option must be specified accordingly. Refer to the Workstation Screens, Leg-Mounted Screens & Desk Structures sections for details
- **Not** compatible with double overlay floor screens over 84" wide
- Power Poles are also compatible with Beam Towers – End Position when specified with the Pass-Through option

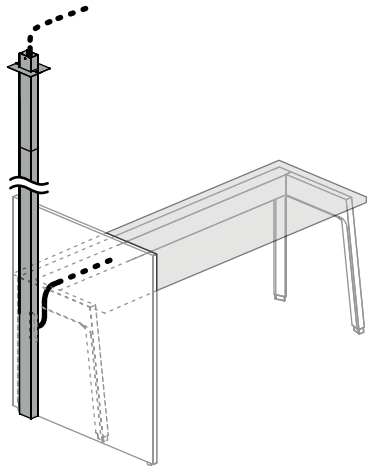

Floor Screen & Floor Screen with Metal Tower – Single-Sided

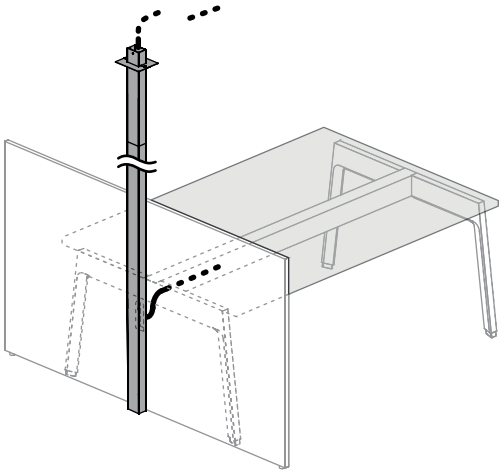

Floor Screen – 84" width or less Double Overlay

planning with power entry (continued)

power pole with ceiling feed – mounting option (continued)

low structural leg/beam attached

- Can be installed at each 3" increment of Double-Sided Structural Beams or EZ Fence Beams for an on- or off-module application
- Can be attached to a Low Structural Leg – Fence (JNDLLF), EZ Fence Leg – Low Height (JZSFL), Structural Beam (JNDBB or JNDCB) or a EZ Fence Beam (JZSBB or JZSCB)

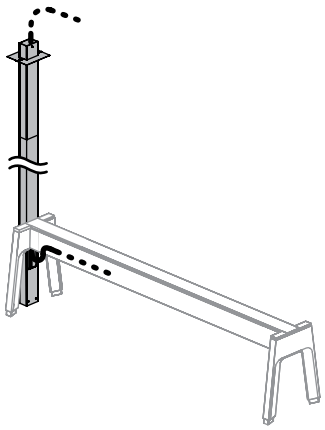

Low Structural Leg – Fence

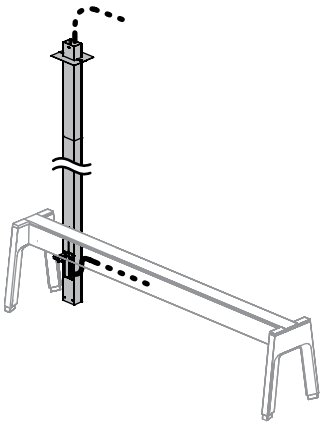

Low Beam On-Module – Fence

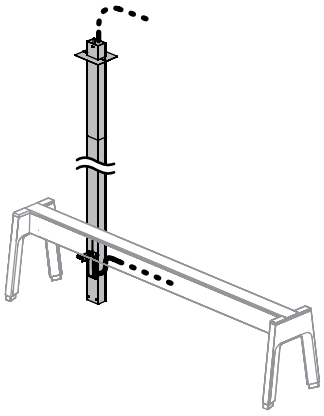

Low Beam Off-Module – Fence

planning with power entry (continued)

power pole with ceiling feed – mounting option (continued)

structural leg/beam attached

- Can be installed at each 3" increment of Single-Sided Structural Beams or EZ Fence Beams for an off-module application
- Can also be attached to Structural Legs, EZ Fence Legs or EZ Structural Legs

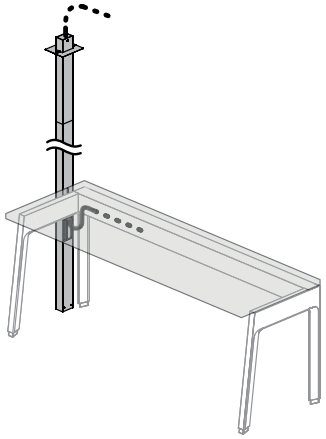

Structural Leg – Single-Sided

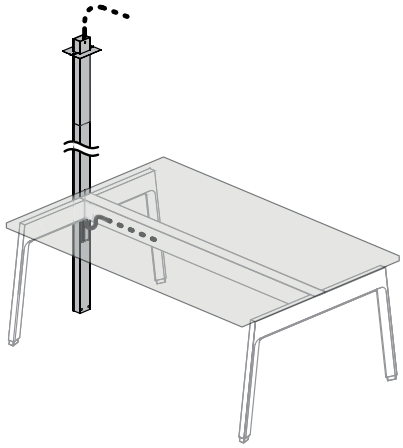

Structural Leg – Double-Sided

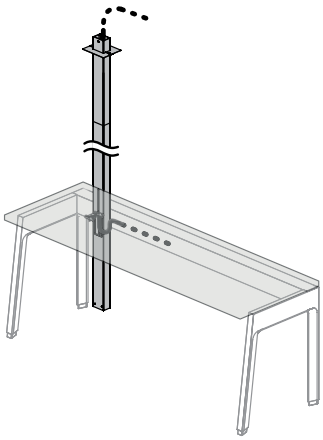

Beam On-Module – Single-Sided

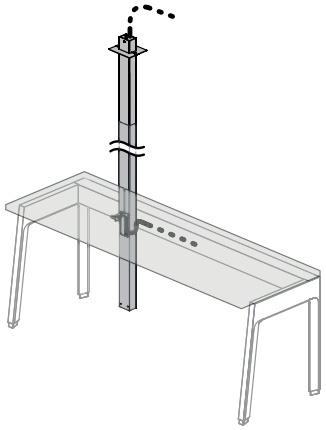

Beam Off-Module – Single-Sided

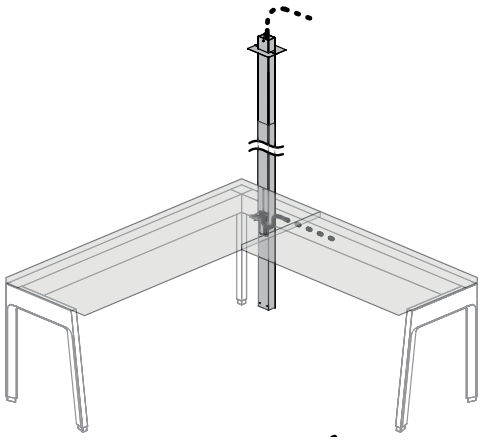

Beam On-Module – Near Post Connector

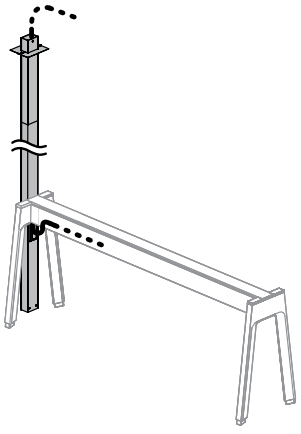

Fence

planning with power entry (continued)

power poles restrictions

- Power Pole **cannot** be mounted on Freestanding Legs
- Power Pole **cannot** be mounted on all Elevated Screens styles
- Power Pole **cannot** be mounted on Freestanding Towers

Power Pole **cannot** be mounted on the outer side of Floor Screens – Beam-Mounted

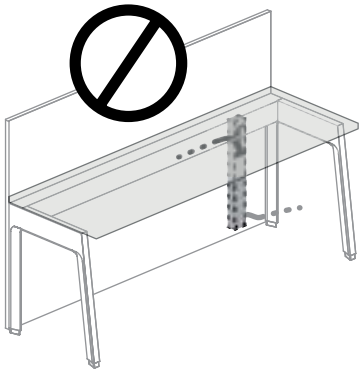

Power Pole for Base Feed

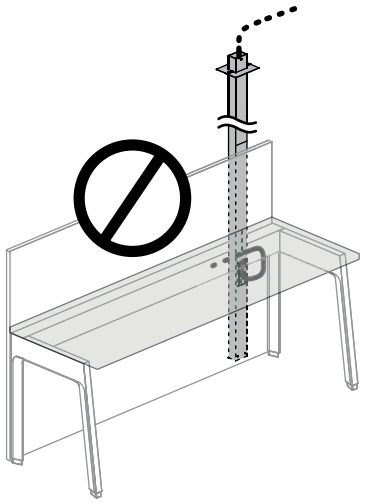

Power Pole for Ceiling Feed

- The following width reduction rule must be considered when Power Pole is used in combination with Beam-Mounted Modesty Panels or Floor Screens
- When a Power Pole is used in combination with a Bottom Kit for Structural Beam – Reinforced, the positions are limited. Refer to specification software for available positions

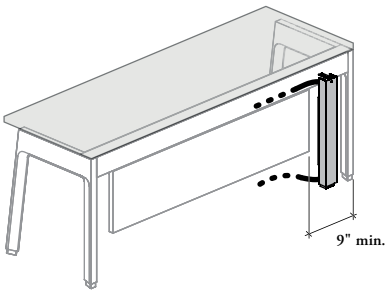

Power Pole for Base Feed

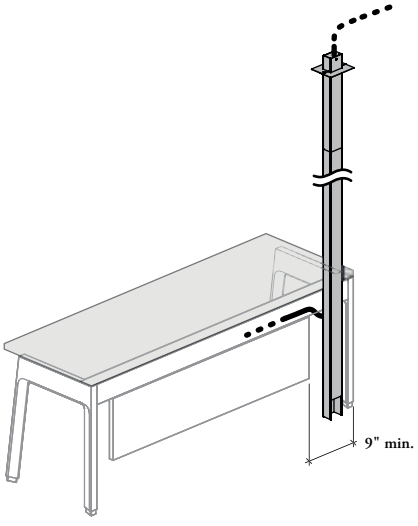

Power Pole for Ceiling Feed

planning with power entry (continued)

power pole capacity

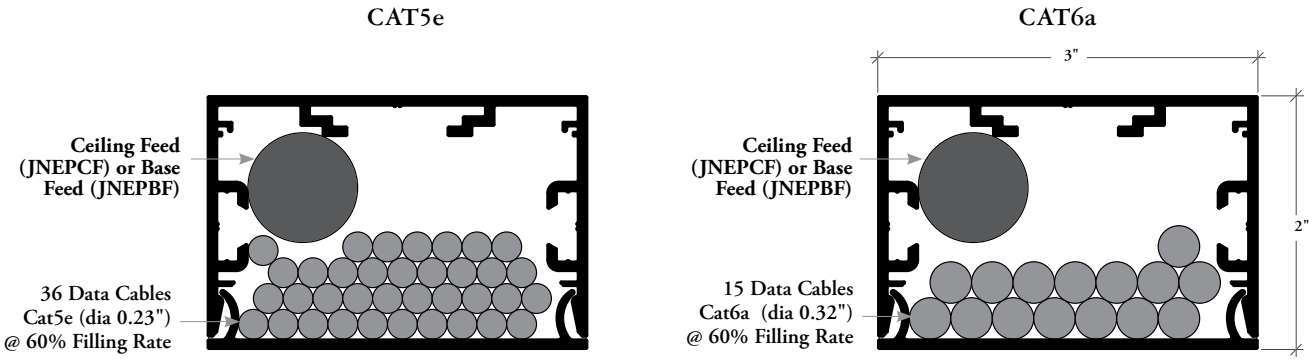

wrap around capacity

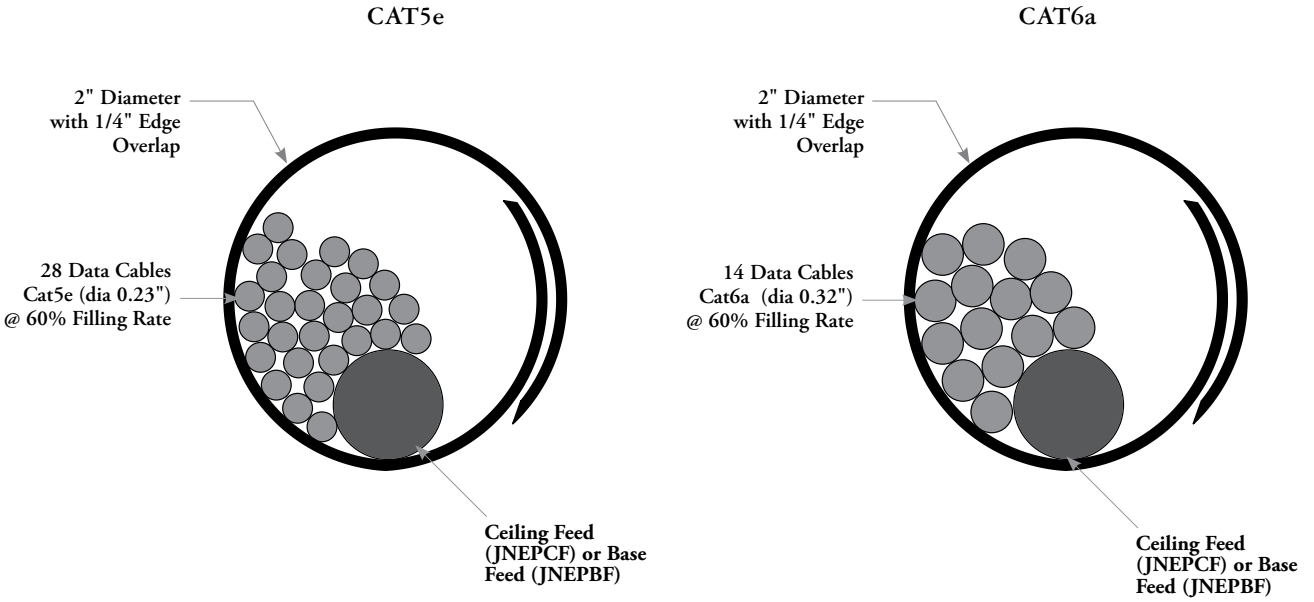

planning with power entry (continued)

wrap around cable manager

- The Wrap Around Cable Manager for Height-Adjustable Table has a diameter of 1" and is available in lengths of 42" (for Standard Height Structural Leg/Beam) or 52" (for Low Height Structural Leg/Beam – Fence). It allows routing cables from a freestanding height-adjustable table to the bottom of a structural beam (shown), EZ Fence Beam or to the underside of a worksurface.
- The Wrap Around Cable Manager for Base Feed has a diameter of 2" and is available in lengths of 28" (for Low Height Structural Leg/Beam – Fence) or 38" (for Standard Height Structural Leg/Beam). It allows routing Base Feed/Data cables coming from the floor to the bottom of the structural beam or EZ Fence Beam

under structural beam application

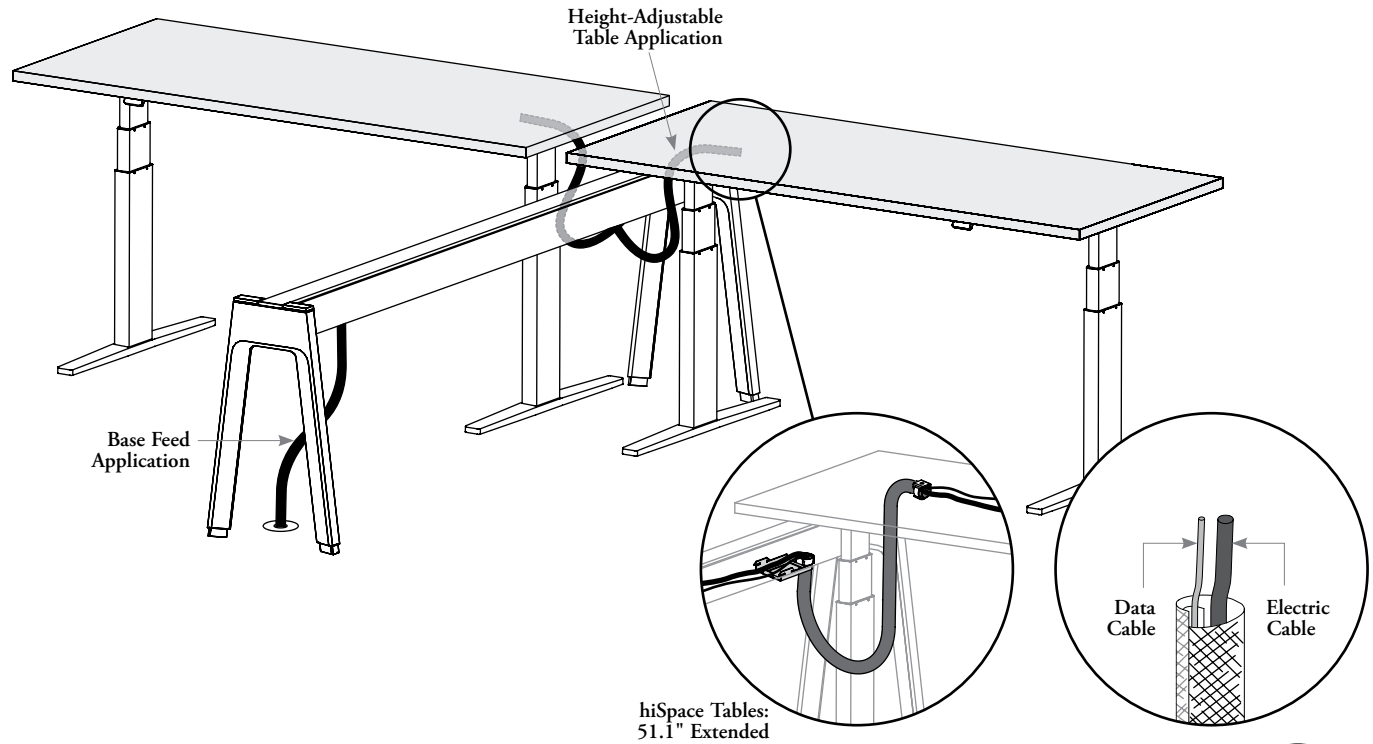

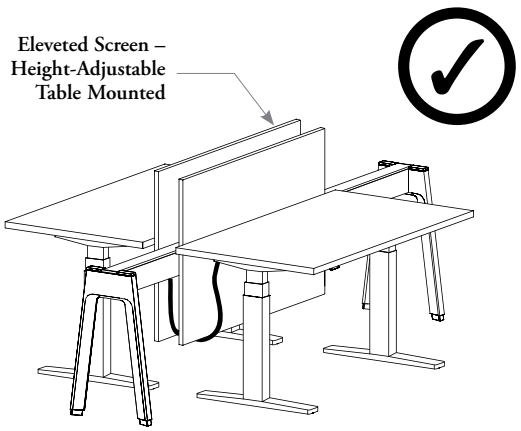

Can be used in combination with Eleveted Screen – **Height-Adjustable Table Mounted**

hiSpace Tables: 51.1" Extended Range with Riser or Navigate Tables: 50.5" Extended Range with Casters

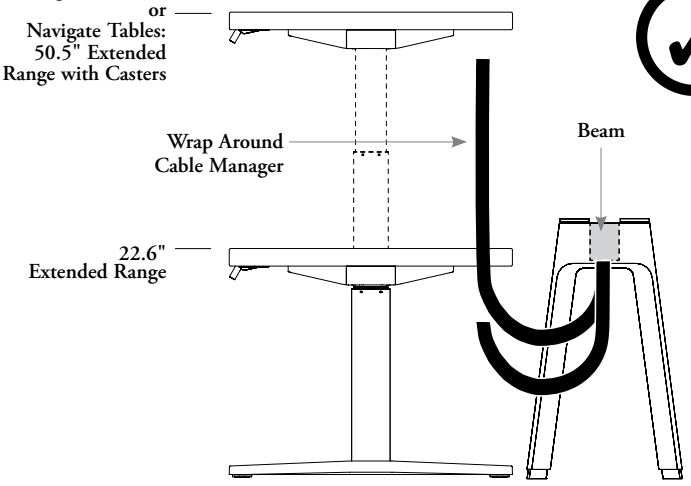

Compatible with hiSpace Height-Adjustable Tables with Extended Range and Extended Range with Riser

Compatible with Navigate Height-Adjustable Tables with Standard and Extended Ranges

planning with power entry (continued)

wrap around cable manager (continued)

under worksurface application

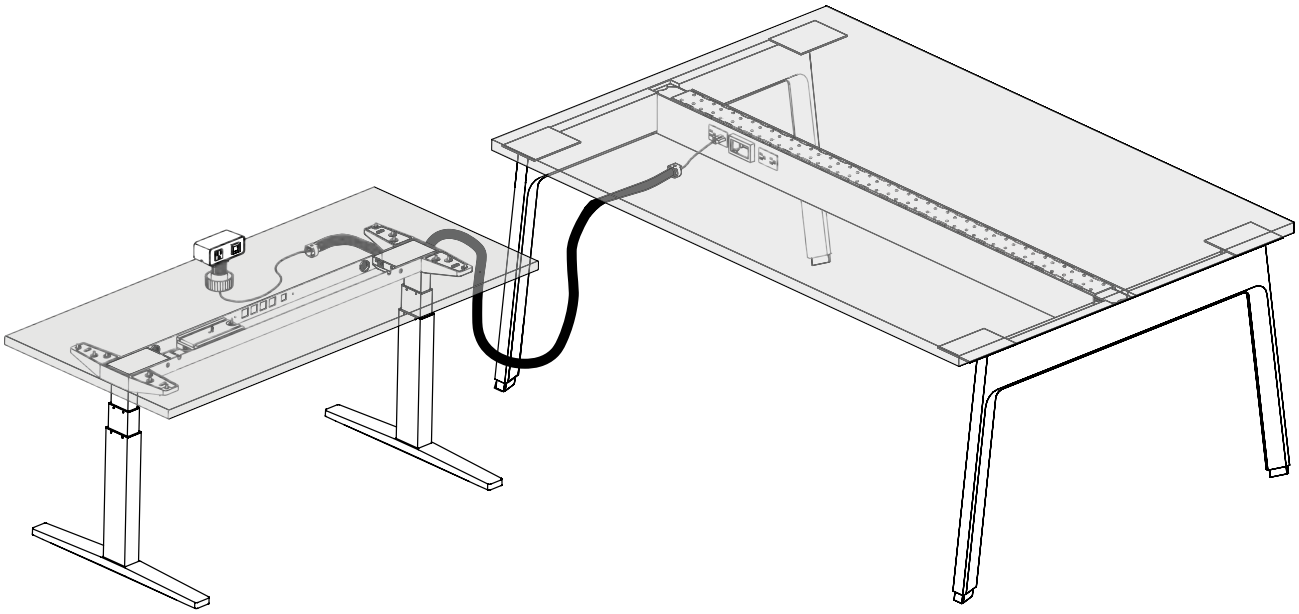

wrap around in combination with vertical wire carrier

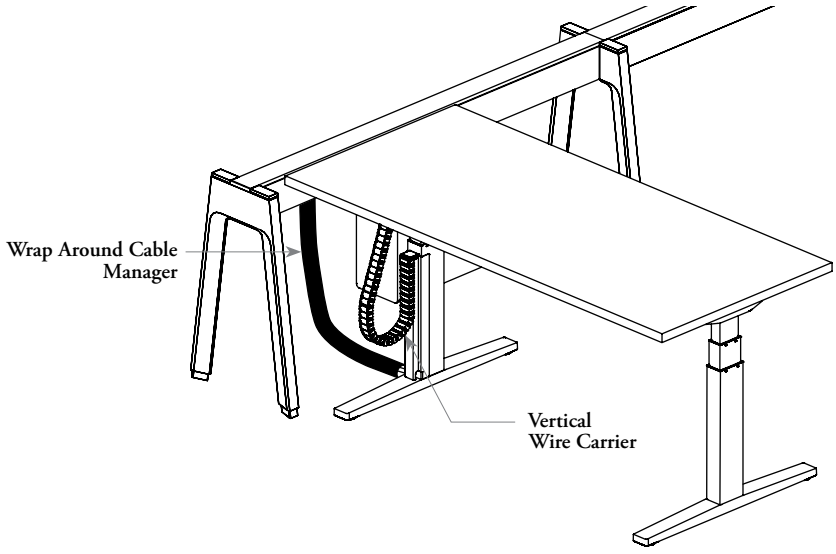

Length Recommendation

- Low Height (18") = 42" length
- Standard Height (28") = 52" length

Can be used in combination with Wrap Around Cable Manager to manage Height-Adjustable Table wire to the Expansion Cityline Structure

power distribution basics

The following outlines the features of power distribution products in Expansion Cityline.

- Check local codes for potential limits or restrictions on products. Local authority approval may be required prior use
- All dimensions are nominal

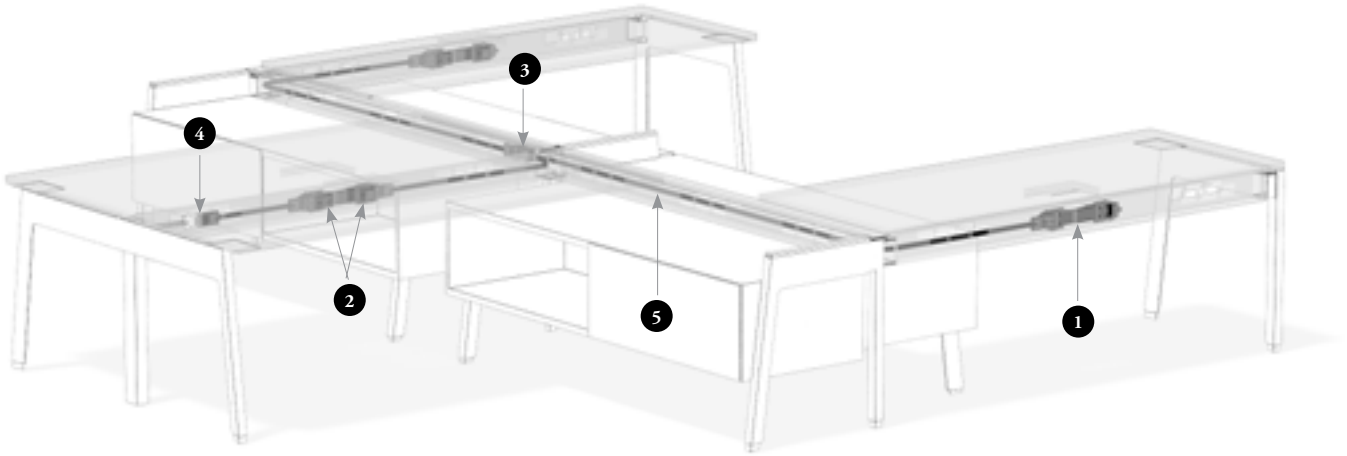

1

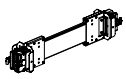

Facing Sides (B)

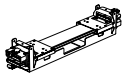

Facing Down (D)

Power Box (JNEPB) EZ compatible

- Attaches inside Structural Beam (JNDBB) or EZ Fence Beam (JZSBB or JZSBS)
- Two Mounting Styles are available:
  - **Facing Sides (B)** is universal for single- and double-sided application
  - **Facing Down (D)** can accomodate two Receptacle Outlets. Beam-Mounted Bracket allows the mounting of modular furniture adapter (**not** included) with modular jacks (**not** included) or the Communication Extender Plate (JNEDE)
- Power Boxes are two-sided. Can accommodate two Receptacle Outlets (JNEPRO) on single-sided applications and four Receptacle Outlets (JNEPRO) on double-sided applications
- Has two connectors for receiving in-feed and distributing current to the rest of the station
- Wire systems include:
  - 7-Wire Dual Non Isolated (7K)
  - 7-Wire Non Isolated Ground (7T)
  - 8-Wire Dual Isolated (8K)
  - 8-Wire Isolated Ground (8T)
- Offered in Standard (S) or PVC Free (V) option

power distribution basics (continued)

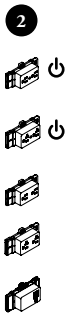

Receptacle Outlet (JNEPRO) EZ compatible

- A one piece duplex receptacle that slides onto the Power Box (JNEPB) to provide power
- Specified individually for maximum circuit flexibility
- Wire systems include:
  - 7-Wire Dual Non Isolated (7K)
  - 7-Wire Non Isolated Ground (7T)
  - 8-Wire Isolated Ground (8T)
  - 8-Wire Dual Isolated (8K)
- Available in Circuits 1, 2, 3, 5, 6, A and B
- Receptacle Outlet configurations consist:
  - 1 or 2 (use with 7K, 7T, 8K or 8T)
  - 3 (use with 7T or 8T)
  - 5 (use with 8K or 8T)
  - 6 (use with 8K only)
  - A (use with 7K or 7T)
  - B (use with 7K only)
    and USB charging outlets for Circuit 1
- Available with or without a controlled logo in 15 or 20 amp
- Offered in Standard (S) or PVC Free (V) option

Finishes: Ebony (YY)*, Storm White (YF), Platinum Grey Coordinate (YN) and Very White Coordinate (YV)
* When T-Slot (T) or Controlled 20 amp (E) Receptacle Style is specified, only Ebony (YY) finish is available

Four-Way Splitter (JNEPDB) EZ compatible

- Distributes power in 2 or 3 directions

I-Connector (JNEPIC) EZ compatible

- Used to join two harnesses when a single harness is not long enough

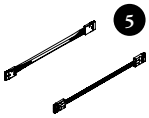

Power Harness (JNEPH) EZ compatible

- Routes power through desk structure by connecting to a Power Box (JNEPB), a Four-Way Splitter (JNEPDB) or a I-Connector (JNEPIC)
- Power Harnesses are non directional
- Wire systems include:
  - 7-Wire Dual Non Isolated (7K)
  - 7-Wire Non Isolated Ground (7T)
  - 8-Wire Isolated Ground (8T)
  - 8-Wire Dual Isolated (8K)
- Lenghts include 18" – 144" (3" increments)
- The 18", 21" and 24" long harnesses are mesh construction, all others sizes are metal conduit
- Offered in Standard (S) or PVC Free (V) option

chicago distribution basics

The following outlines the features of Chicago power distribution products in Expansion Cityline.

- Check local codes for potential limits or restrictions on products. Local authority approval may be required prior use
- All dimensions are nominal

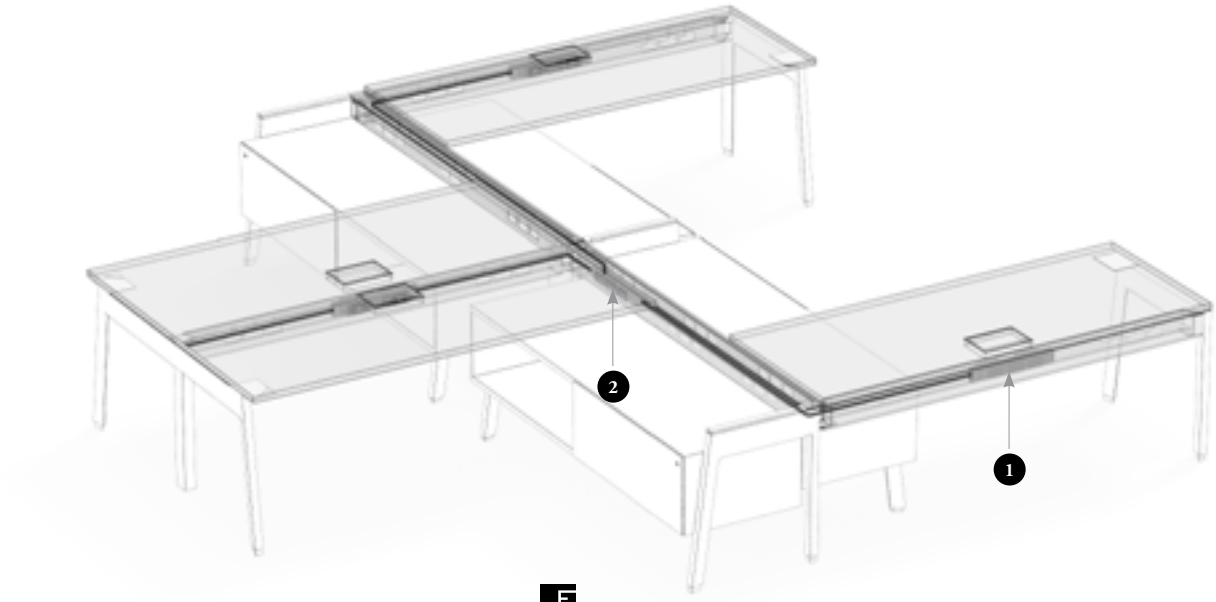

1

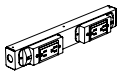

Facing Sides (B)

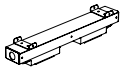

Facing Down (D)

Chicago Power Box (JNECPB) EZ compatible

- Attaches inside Chicago Structural Beam (JNDCB) or Chicago EZ Fence Beam (JZSCB or JZSCS) only
- Two Mounting Styles are available:
  - **Facing Sides (B)** are available in Single-Sided Configuration (S) that include two outlets and Double-Sided Configuration (D) that include four outlets, two on each side
  - **Facing Down (D)** includes two outlets
- Includes the outlets but all connectors are excluded
- Electrical connections must be done on-site by a certified electrician
- Each end has 1/2" trade size knockout
- Standard feeds and harnesses are **not** compatible with Chicago Power Box
- Four Receptacle Styles are available:
  - Controlled 15 amp (D)
  - Controlled 20 amp (E)
  - Standard 15 amp (S)
  - T-Slot 20 amp (T)

Finishes: Platinum (60) that matches with Standard Grey Duplex and Very White (83) that matches with Standard White Duplex

2

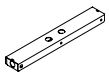

Chicago Junction Box (JNECJB) EZ compatible

- Attaches inside a Chicago Structural Beam (JNDCB) or Chicago EZ Fence Beam (JZSCB or JZSCS) only
- Each end has 1/2" trade size knockout and two additional ones on one face of Junction Box to split the power in other directions or to connect the Chicago Power Module – Storage for Height-Adjustability (JNECPH)
- Electrical connections must be done on-site by a certified electrician
- Each end has 1/2" trade size knockout
- Standard feeds and harnesses are **not** compatible with Chicago Power Box

Finish: Recycled Paint

planning with power distribution

facing side & down restrictions

With Recessed Post with Long Span Kit
The Power Box and Receptacle Outlets are **not** allowed in either orientations when placed over the recessed post

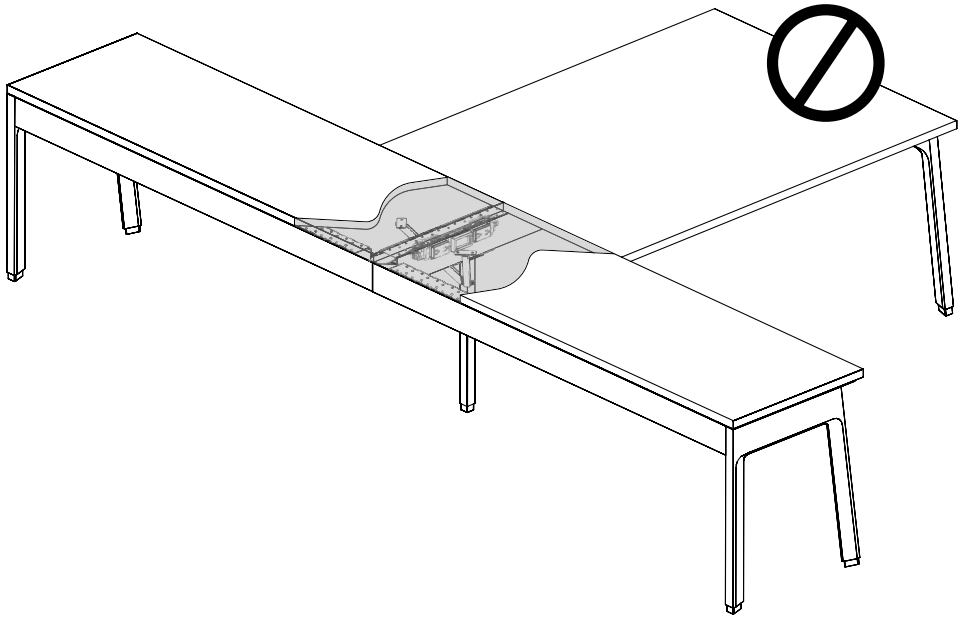

facing down restrictions only

With Bench Stabilizer
Mounting Brackets of Bench Stabilizer interfere with facing down Power Box

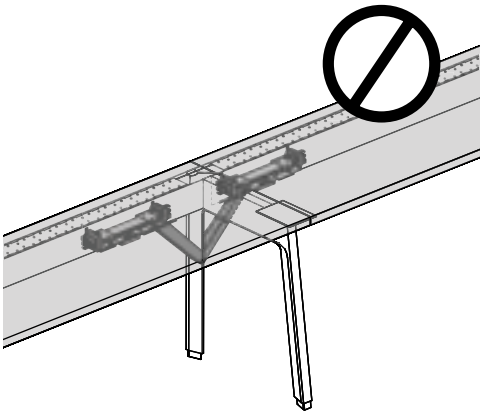

Single-Sided Application

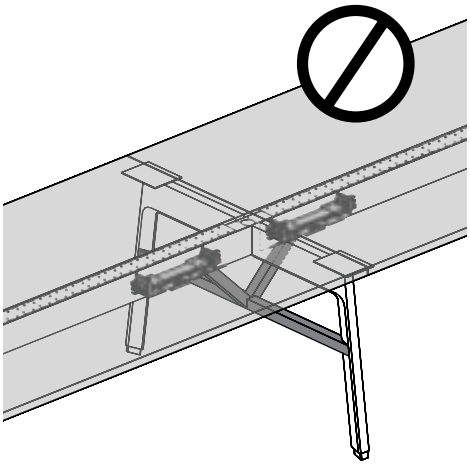

Double-Sided Application

planning with power distribution (continued)

facing down restrictions only (continued)

With Storage for Height-Adjustable, Suspended & Semi-Suspended Credenzas

Mounting Brackets of Storage for Height-Adjustable, Suspended or Semi-Suspended Credenzas interfere with facing down Power Box

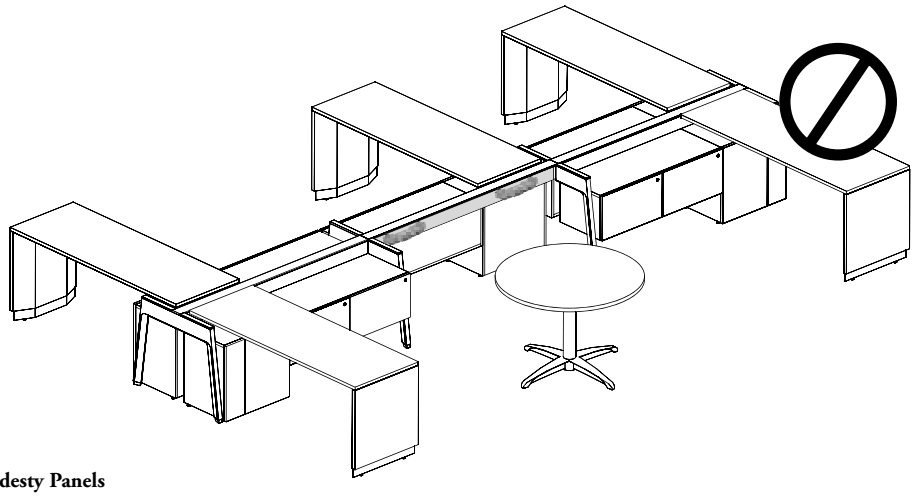

With Modesty Panels

Modesty Panel interfere with facing down Power Box

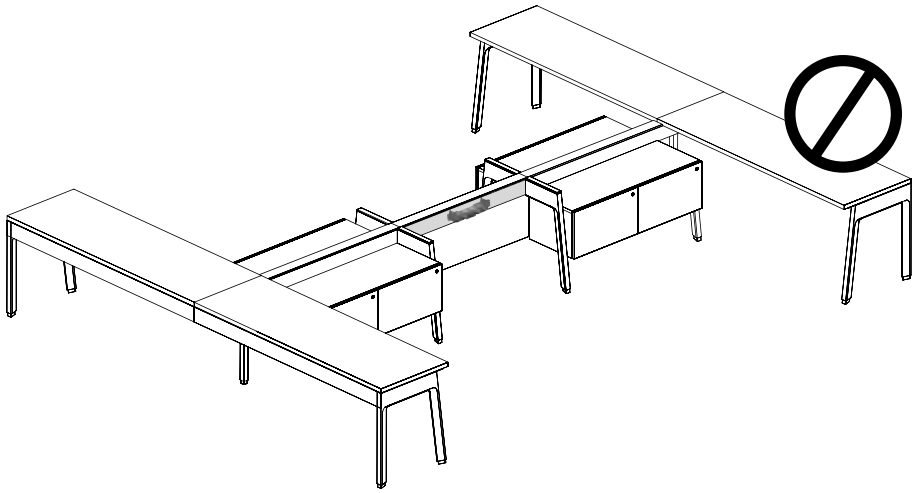

With Elevated Screens, Elevated Corner Screen – Felt and Floor Screens – Beam-Mounted

Mounting Brackets of Elevated Screens, Elevated Corner Screen – Felt or Floor Screen – Beam-Mounted interfere with facing down Power Box

Not applicable with EZ Fence Structure

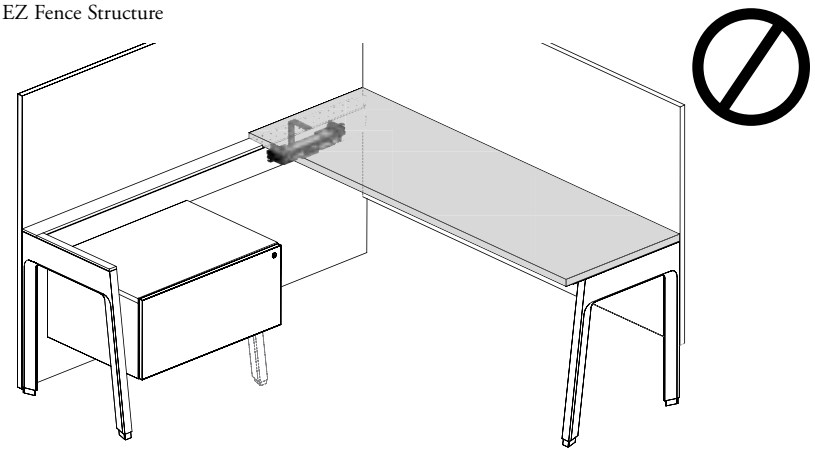

planning with power distribution (continued)

The following dimensions must be considered when planning power distribution in Expansion Cityline.

- Calculating Power Harnesses length is done by adding and subtracting nominal values of components such as beam width, power box position, power box half or full length and connectors value
- The dimensions listed below are not suitable for Chicago electrical products

component dimensions

structural beam or ez fence beam

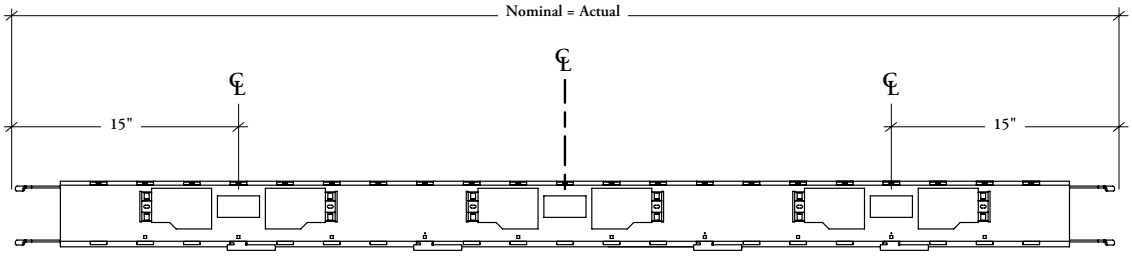

power box (JNEPB)

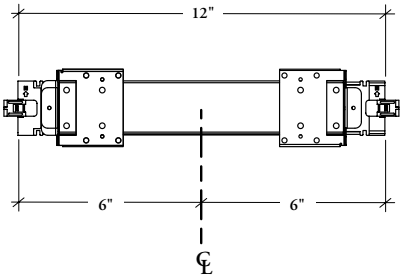

four-way splitter (JNEPDB)

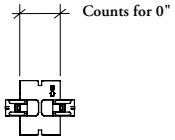

i-connector (JNEPIC)

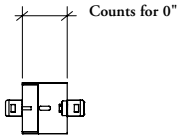

power harness (JNEPH)

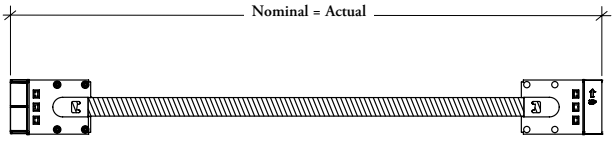

planning with power distribution (continued)

- Equations below are applicable for Facing Sides (Shown) and Facing Down mounting styles
- Both mounting styles can be used in the same beam, but **not** at the same cut-out location
- Equations below are in the same order than what is seen from left to right and up to down on the illustrations
- Power and Data opening combinations are not all available for Structural Beam Cover – Side (JNDBCS). Refer to the specification software for complete offering
- If the result of an equation is under 18", choose the 18" long Power Harness (JNEPH) that comes in flexible mesh construction and allows to be looped inside Structural Beam

determining power harnesses length (facing sides or down) – desk structure or ez fence structure

power entry to power box – opposite right to centered position

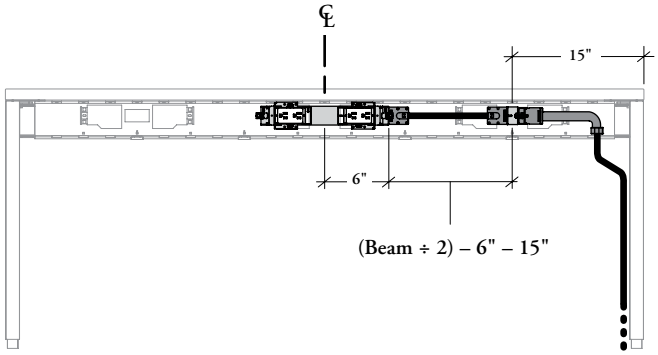

power entry to power box – opposite right to left position

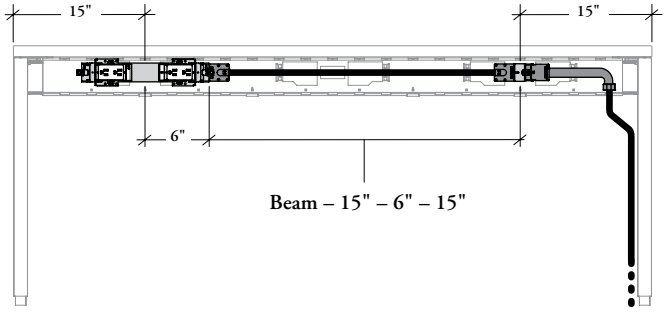

power box to power box – opposite right to centered position
(for 72" to 84" structural beams only)

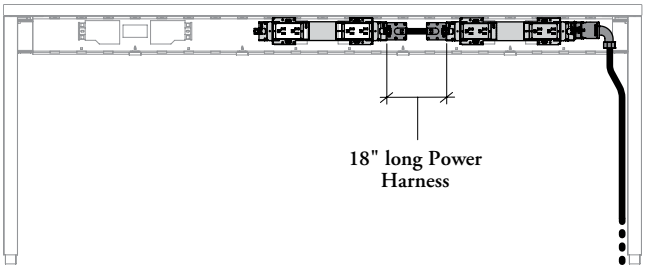

planning with power distribution (continued)

determining power harnesses length (facing sides or down) – desk structure or ez fence structure (continued)

power box to power box – adjacent right to left position
(for 54" to 84" structural beams only)

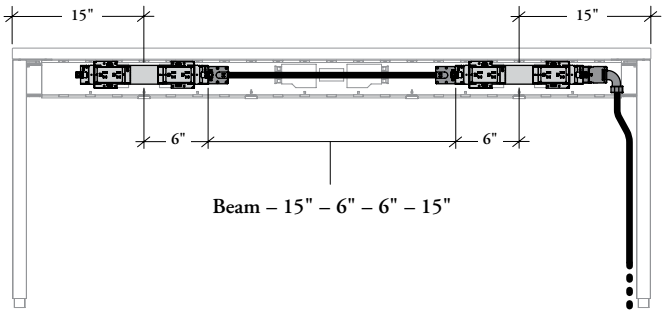

four-way splitter or i-connector to power box – opposite right to centered position

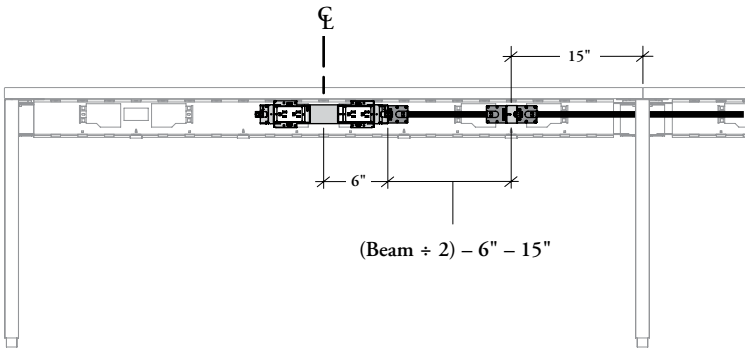

four-way splitter or i-connector to power box – opposite right to left position

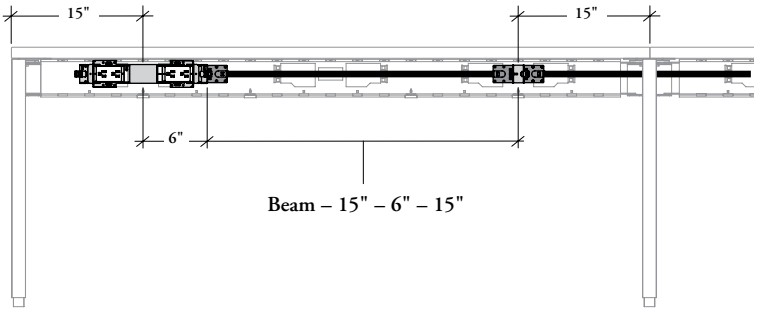

planning with power distribution (continued)

The following examples are **not** applicable with EZ Fence Structure. For details on page

determining power harnesses length (facing sides or down) – desk structure (continued)

example 1

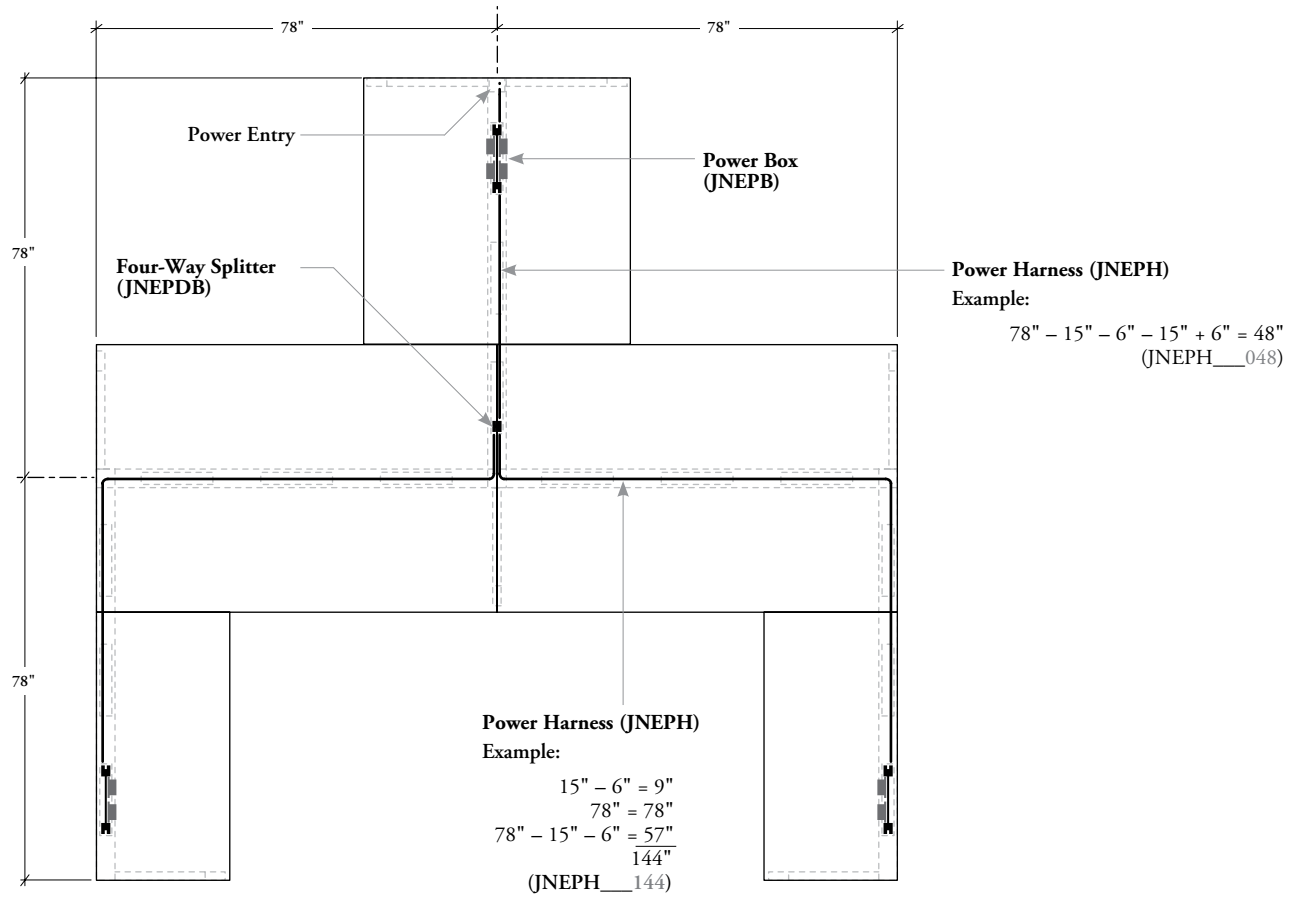

planning with power distribution (continued)

determining power harnesses length (facing sides or down) – desk structure (continued)

example 2

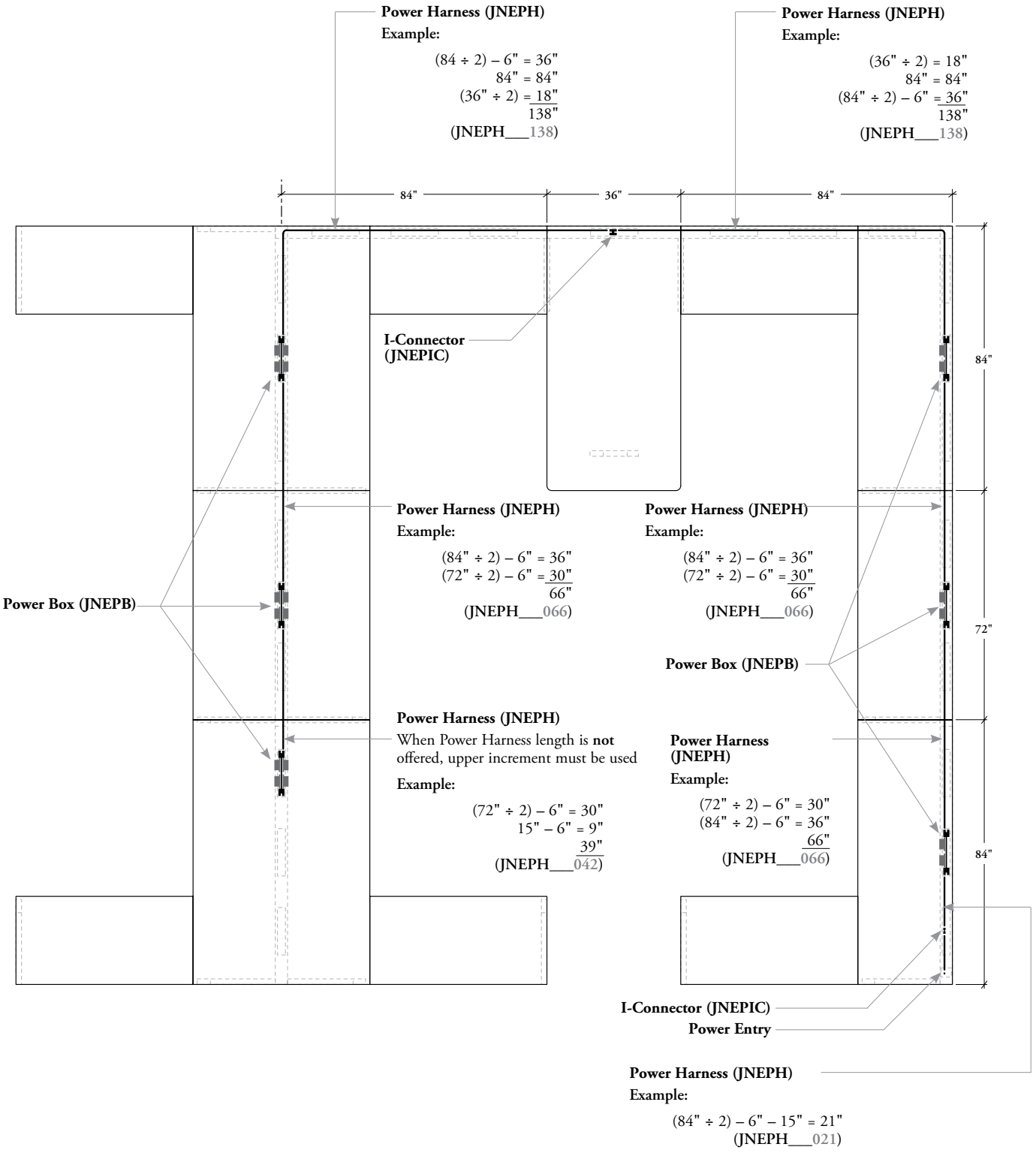

planning with power distribution (continued)

The example illustrated below is **not** applicable with Desk Structure

determining power harnesses length (facing sides or down) – ez fence structure (continued)

Each time a harness is crossing a EZ Fence Support, 1 1/2" needs to be added. If needed, the final harness length will then be rounded up to the next available size

example 3

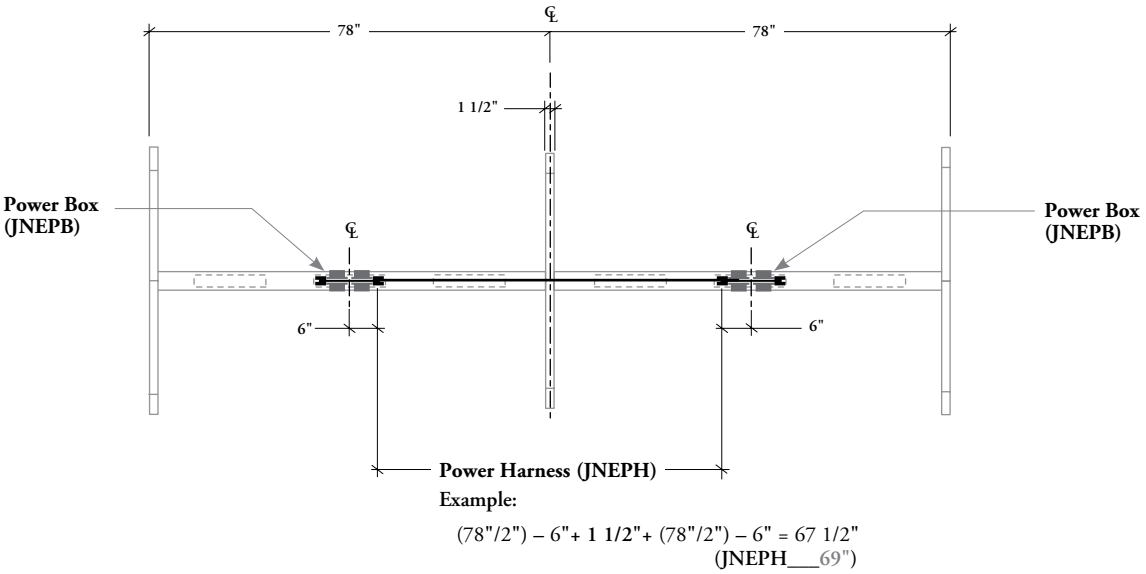

Example:

(78"/2") – 6"+ **1 1/2"**+ (78"/2") – 6" = 67 1/2"
(JNEPH___69")

power distribution for height-adjustable run-off basics

The following outlines the features of power distribution products for Height-Adjustable Run-Off in Expansion Cityline.

Check local codes for potential limits or restrictions on products. Local authority approval may be required prior use

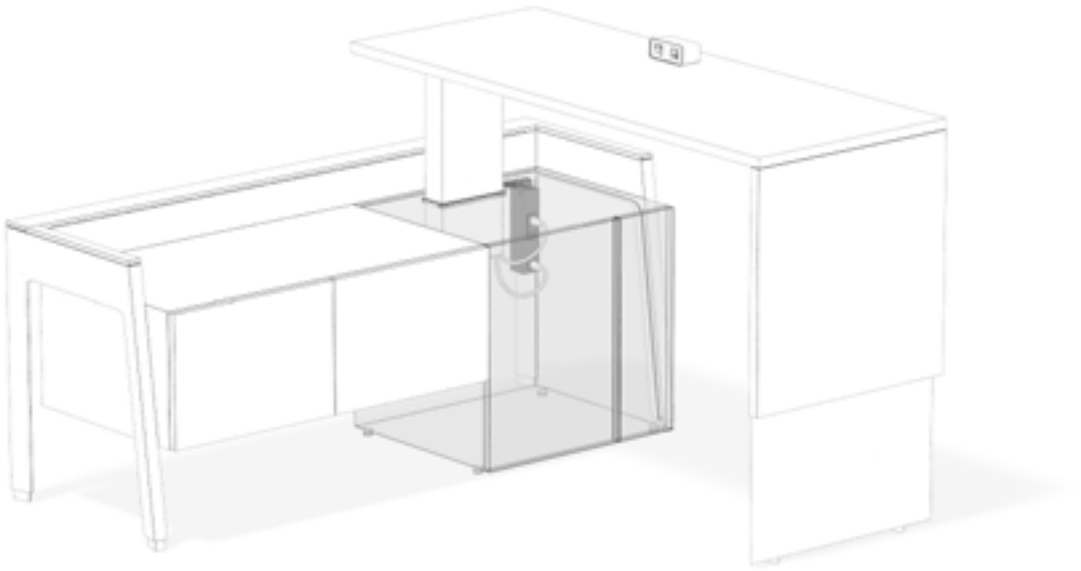

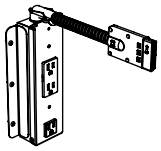

Power Module – Storage for Height-Adjustability (JNEPMH)

- A Power Module that includes 1 duplex and 1 simplex to supply power for Height-Adjustable Run-Off and up to two more devices
- Installed inside Storage Cabinet for Height-Adjustable Run-Off (JNHSC)
- Comes with one connector to attach to a Power Box (JNEPB), a Four-Way Splitter (JNEPDB) or an I-Connector (JNEPIC)
- Wire systems include:
  - 7-Wire Dual Non Isolated (7K)
  - 7-Wire Non Isolated Ground (7T)
  - 8-Wire Dual Isolated (8K)
  - 8-Wire Isolated Ground (8T)
- Duplex is available in Standard and Controlled 15 amp or T-Slot or Controlled 20 amp outlet configurations consist of Circuits:
  - 1 or 2 (use with 7K, 7T, 8K or 8T)
  - 3 (use with 7T or 8T)
  - 5 (use with 8K or 8T)
  - 6 (use with 8K only)
  - A (use with 7K or 7T)
  - B (use with 7K only)
- Simplex is available in Standard 15 amp only. Outlet configurations consist of Circuits:
  - 5 (use with 8K or 8T)
  - 6 (use with 8K only)
  - A (use with 7K or 7T)
  - B (use with 7K only)
- Offered in Standard (S) or PVC Free (V) option

Finish: Platinum

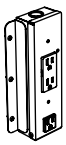

Chicago Power Module – Storage for Height-Adjustability (JNECPH)

- A Chicago Power Module that includes 1 duplex and 1 simplex to supply power for Height-Adjustable Run-Off and up to two more devices
- Installed inside Storage Cabinet for Height-Adjustable Run-Off (JNHSC)
- Includes the outlets but **does not** include any connector
- Electrical connection must be done on-site by a certified electrician
- Power Module includes a 90° Strain Relief on top
- Duplex is available in Standard or Controlled 15 amp, or T-Slot or Controlled 20 amp
- Simplex is available in Standard 15 amp only
- Standard feeds and harnesses **cannot** be specified with this module

Finish: Platinum

planning with standard or chicago power distribution for height-adjustable run-off

The following must be considered when planning power distribution with Height-Adjustable Run-Off in Expansion Cityline.

circuit restriction

As Height-Adjustable Run-Off – Bevel Base (JNHB) has a power draw of 300 Watts:

– **Cannot** connect more than 5 Height-Adjustable Run-Offs per 15 amp circuit

– **Cannot** connect more than 7 Height-Adjustable Run-Offs per 20 amp circuit

Warning : numbers above are given as a general guideline only. Check local codes and building capacity for potential limits or restrictions on loadings. Local authority approval may be required

structural beam outlets restriction

Receptacle Outlets (JNEPRO) and Chicago Power Box (JNECPB) **cannot** be mounted in front of Height-Adjustable Run-Off. There will be an interference

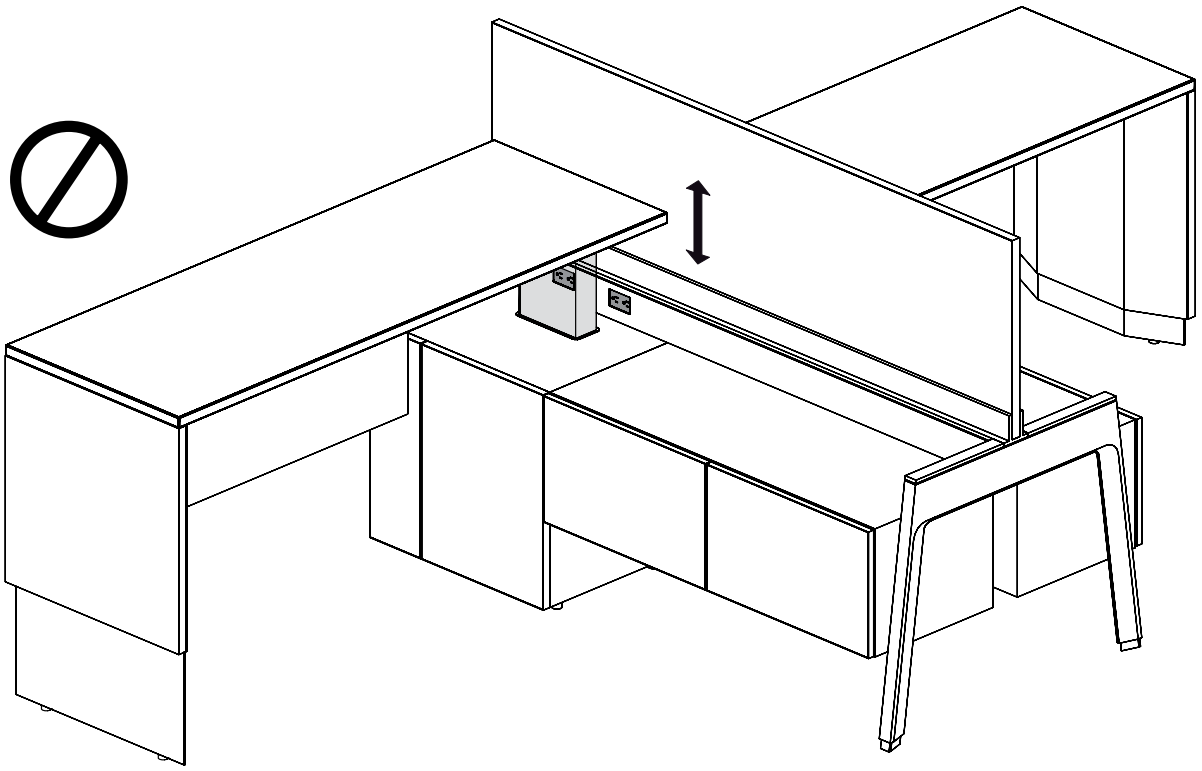

planning with standard power distribution for height-adjustable run-off

The following must be considered when planning user power with Height-Adjustable Run-Off in Expansion Cityline.

user power configurations

example 1: without power outlets on structural beam or ez fence beam

- For a single in-feed, avoiding to use power outlets mounted on beam enables a greater number of workstations or a greater number of outlets that can be mounted on or underneath the Height-Adjustable Run-Off. The use of i-Connector or Four-Way Splitter will be required
- Check local codes for potential limits or restrictions on products. Local authority approval may be required prior use

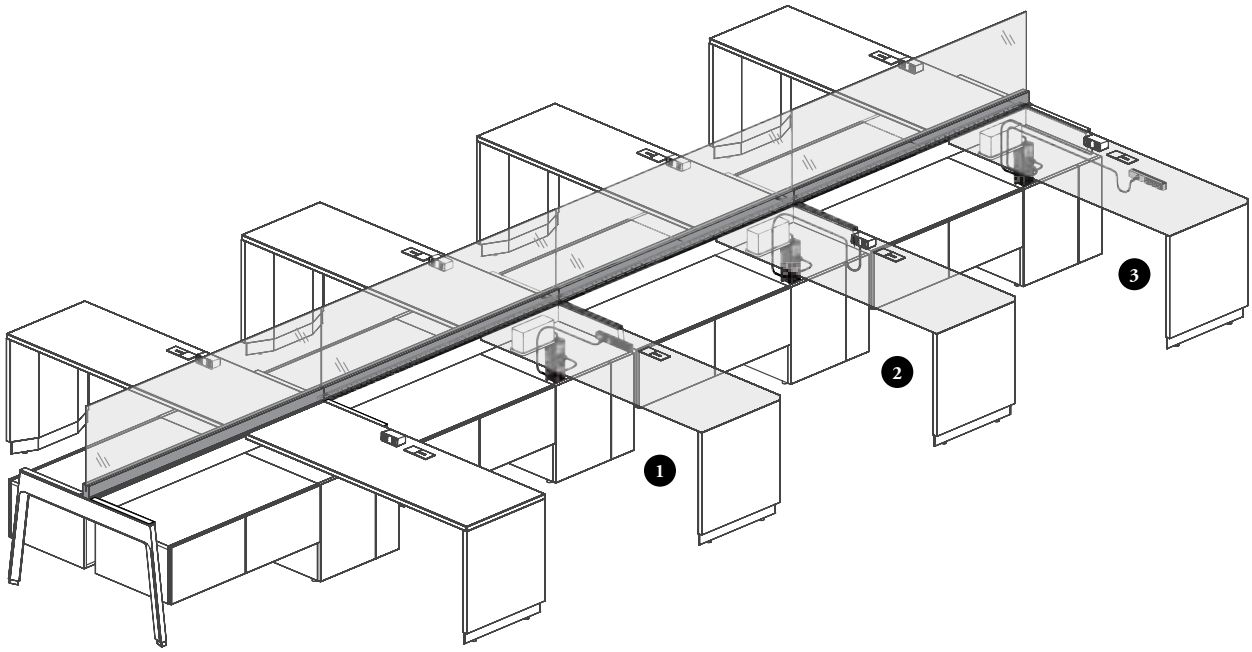

Under Worksurface Power Access 1

- An Underworksurface Plug-In power Bar (JNEPP) can be connected to the Power Module for Height-Adjustability (JNEPMH)
- Used under a Height-Adjustable Run-Off and supplies power to user for permanent devices

Above Worksurface Power Access 2

- A Power Qube (JNEPC) can be connected to the Power Module for Height-Adjustability (JNEPMH)
- Used above a Height-Adjustable Run-Off and supplies power to user for temporary devices

Underworksurface Power Bar (JNEPP)

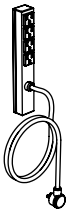

Power Qube (JNEPC)

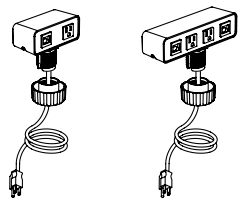

Under and Above Worksurface Power Access 3

- An Underworksurface Plug-In Power Bar (JNEPP) and only the Power Qube – Dual – 1 Power (JNEPCD1__) can be connected to the Power Module for Height-Adjustability (JNEPMH)
- Used under and above a Height-Adjustable Run-Off and supplies power to user for permanent and temporary devices

planning with standard power distribution for height-adjustable run-off (continued)

user power configurations (continued)

example 2: with power outlets on structural beam or ez fence beam

- For a single in-feed, the use of power outlets mounted on beam power boxes reduces the number of workstations or the number of outlets that can be mounted on or underneath the Height-Adjustable Run-Off
- Up to two Receptacle Outlets (JNPRO) can be used in each workstation. Can be two power outlets, one power and one USB outlets or two USB outlets
- Check local codes for potential limits or restrictions on products. Local authority approval may be required prior use

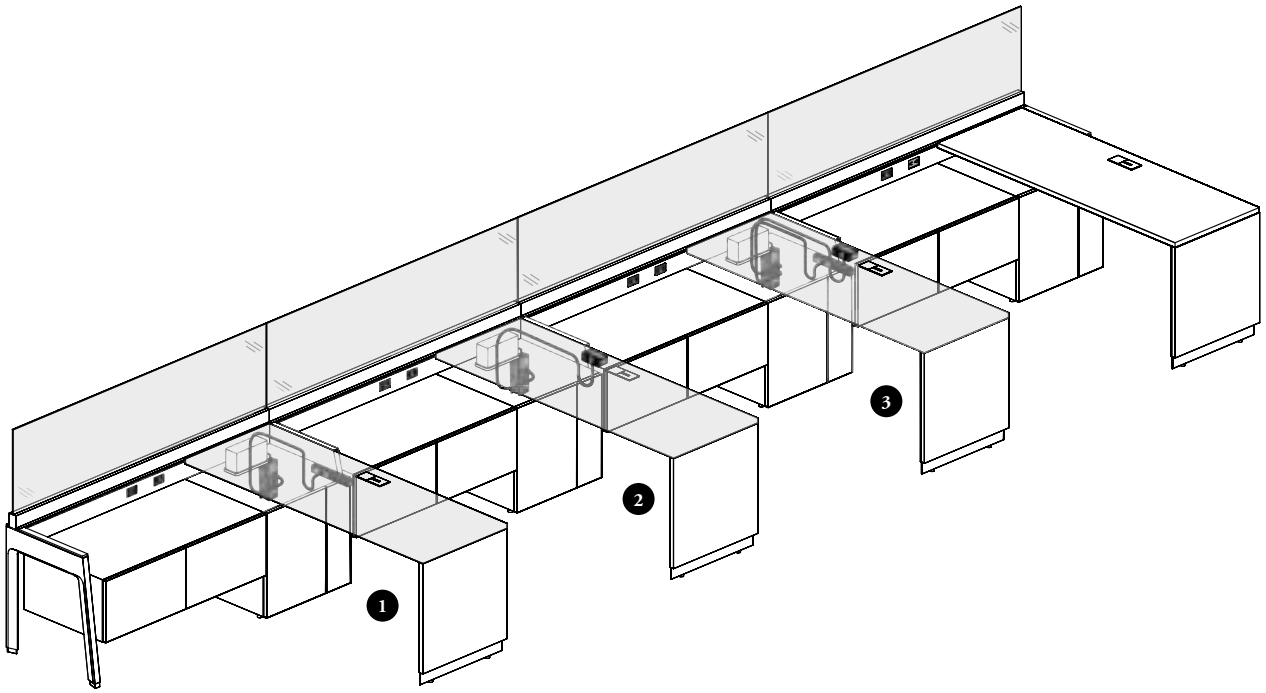

Under Worksurface Power Access 1

- An Underworksurface Plug-In Power Bar (JNEPP) can be connected to the Power Module for Height-Adjustability (JNEPMH)
- Used under a Height-Adjustable Run-Off and supplies power to user for permanent devices

Above Worksurface Power Access 2

- A Power Qube (JNEPC) can be connected to the Power Module for Height-Adjustability (JNEPMH)
- Used above a Height-Adjustable Run-Off and supplies power to user for temporary devices

Underworksurface Power Bar (JNEPP)

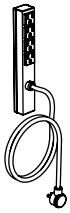

Power Qube (JNEPC)

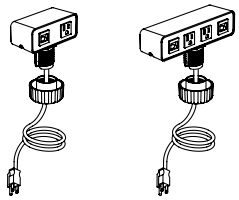

Under and Above Worksurface Power Access 3

- An Underworksurface Plug-In Power Bar (JNEPP) and a Power Qube (JNEPC) can be connected to the Power Module for Height-Adjustability (JNEPMH)
- Used under and above a Height-Adjustable Run-Off and supplies power to user for permanent and temporary devices

planning with standard power distribution for hispace or navigate height-adjustable tables

The following must be considered when planning user power with hiSpace or Navigate Height-Adjustable Tables in Expansion Cityline.

user power configurations (continued)

example 1: with facing down power box & height-adjustable tables

- For a single in-feed, using power module mounted on beam reduces the number of workstations or the number of outlets that can be mounted on or underneath the hiSpace or Navigate Height-Adjustable Table
- Up to two Receptacle Outlets (JNPRO) can be used in each workstation. Can be two power outlets, one power and one USB outlets or two USB outlets
- Check local codes for potential limits or restrictions on products. Local authority approval may be required prior use

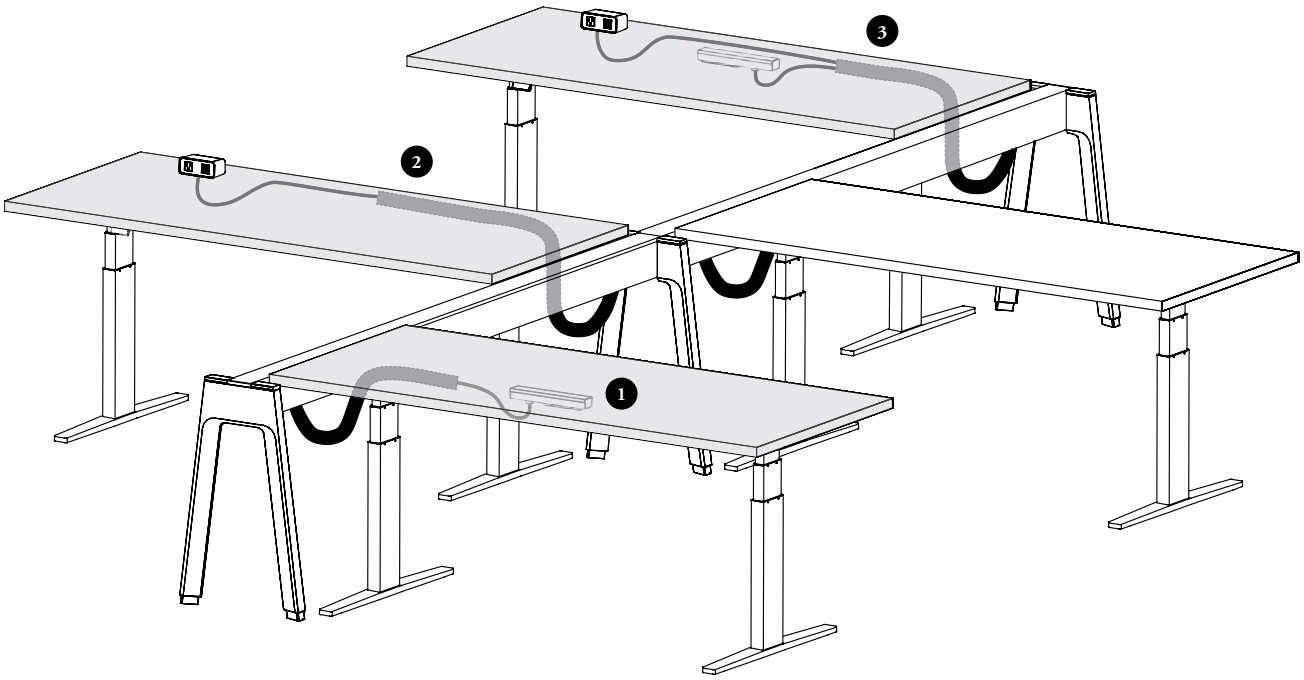

Under Worksurface Power Access 1

- An Underworksurface Plug-In power Bar (JNEPP) can be connected to the Receptacle Outlets (JNEPRO) of Power Box (JNEPB)
- Used under a Height-Adjustable Table and supplies power to user for permanent devices

Above Worksurface Power Access 2

- A Power Qube (JNEPC) can be connected to the Receptacle Outlets (JNEPRO) of Power Box (JNEPB)
- Used above a Height-Adjustable Table and supplies power to user for temporary devices

Underworksurface Power Bar (JNEPP)

Power Qube (JNEPC)

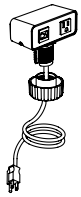

Under and Above Worksurface Power Access 3

- An Underworksurface Plug-In Power Bar (JNEPP) and a the Power Qube (JNEPC) can be connected to the Receptacle Outlets (JNEPRO) of Power Box (JNEPB)
- Used under and above a Height-Adjustable Table and supplies power to user for permanent and temporary devices

planning with standard power distribution for ez fence suspended storage

The following must be considered when planning user power entry and power bar with the EZ Fence Suspended Storage in Expansion Cityline.

- The EZ Suspended Credenza installed under the EZ Fence Beam limit the access to power and cable routing
- Only the EZ Suspended Credenza – Lateral File and Cubby – Shared (JZBSO) and the EZ Suspended Credenza – Media Center – Single-Sided (JZBSM) are ready to accept a base feed through them. When planning with the other EZ Suspended Credenza, the power needs to be routed outside of the credenza
- Check local codes for potential limits or restrictions on products. Local authority approval may be required prior use

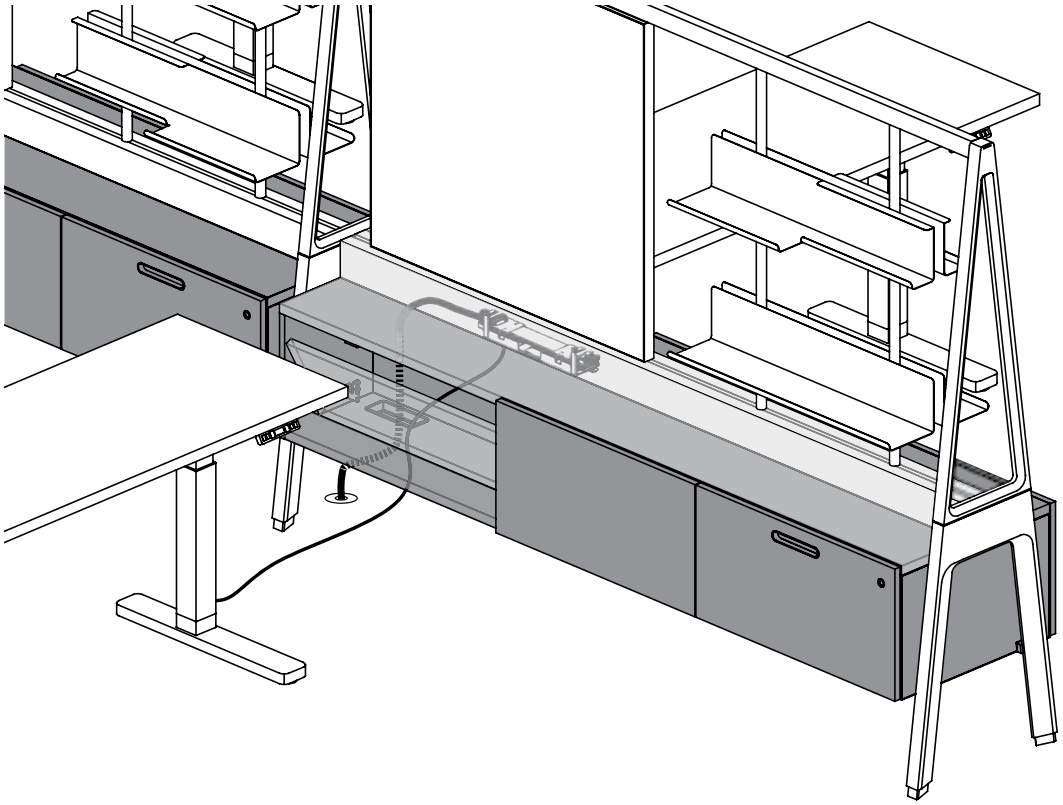

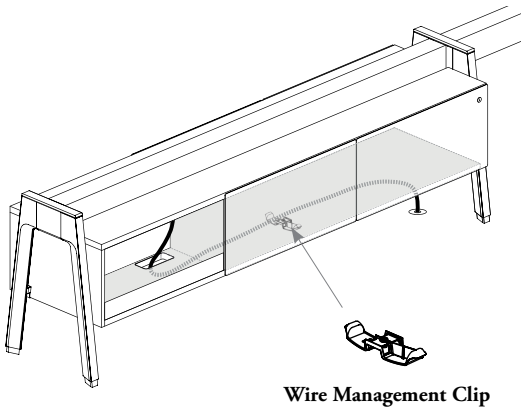

Wire Management Clip

EZ Suspended Credenza – Lateral File and Cubby – Shared (JZBSO)

- This suspended credenza comes with wire management clip to run wire along the bottom of the credenza.
- If needed, Base Feed, Data Cable or Height-Adjustable table wires can be managed by these clips

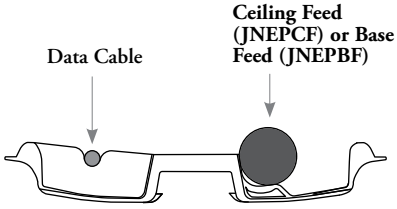

planning with standard power distribution for ez fence suspended storage (continued)

base feed & power bar access

Base Feed Entry Point

The Base Feed entry point is located between the two open sections

Structural Beam and Power Box Access

There is a open section, in the middle of the credenza, between the removable back panels that allows access to the beam/Power Module

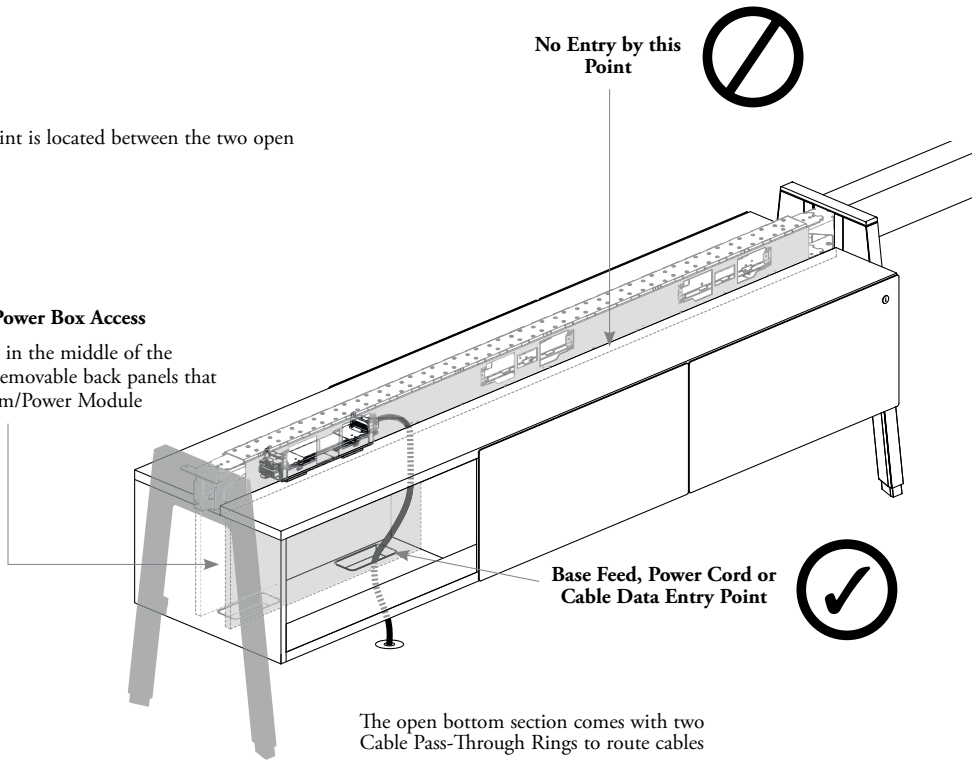

facing down power box position

Power Box Position with EZ Suspended Credenza – Lateral File and Cubby – Shared (JZBSO)

- Only a Facing Down Power Box (JNSPBD) can be placed over an open section of the credenza. It is **not** allowed to place a Power Box over a File Drawer sections
- It is **not** recommended to use a Facing Side Power Box (JNEPB or JNECPB) with a height-adjustable table as because all wires will be visible on top of the credenza and they will be no cable management solution available

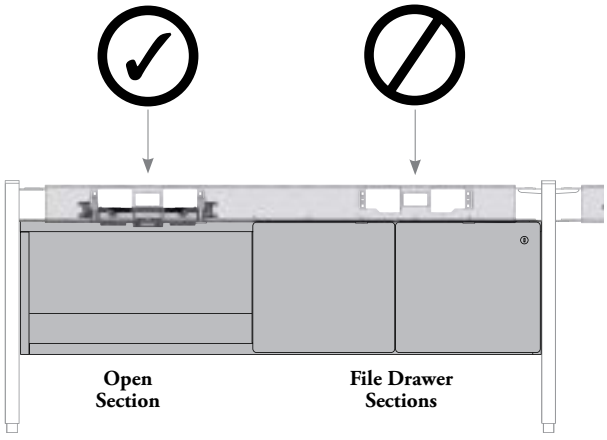

planning with standard power distribution for ez fence suspended storage (continued)

base feed applications

Infeeds can be installed at the first Facing Down Power Box (JNEPBD) location, but the connection needs to be done at the connector away from the leg

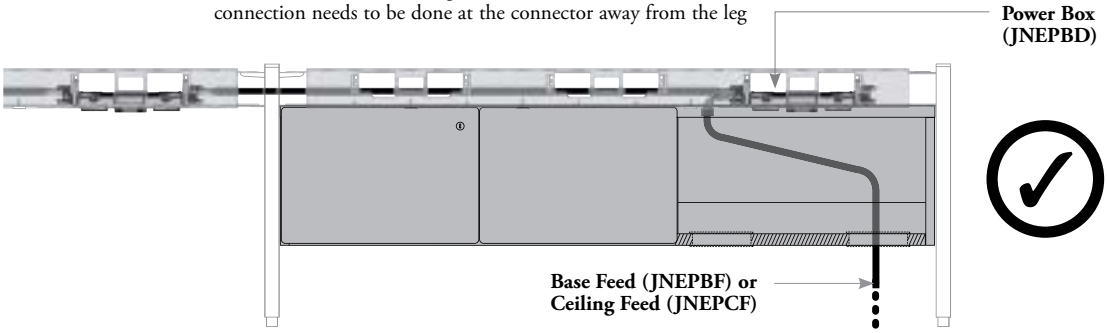

When an infeed needs to be connected to Facing Down Power Box (JNEPBD) close to a leg, the connection **cannot** be done at the connector right next to the leg

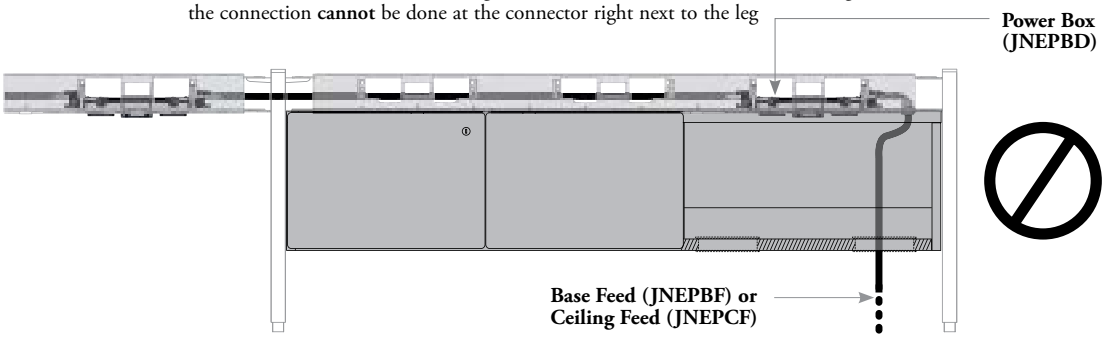

split base feed application

Split Base Feed must be installed underneath the Facing Down Power Box (JNEPBD) when used with an EZ Suspended Credenza – Lateral File and Cubby – Shared (JZBSO). However, one the receptacle outlets of the Power Box will then be obstructed

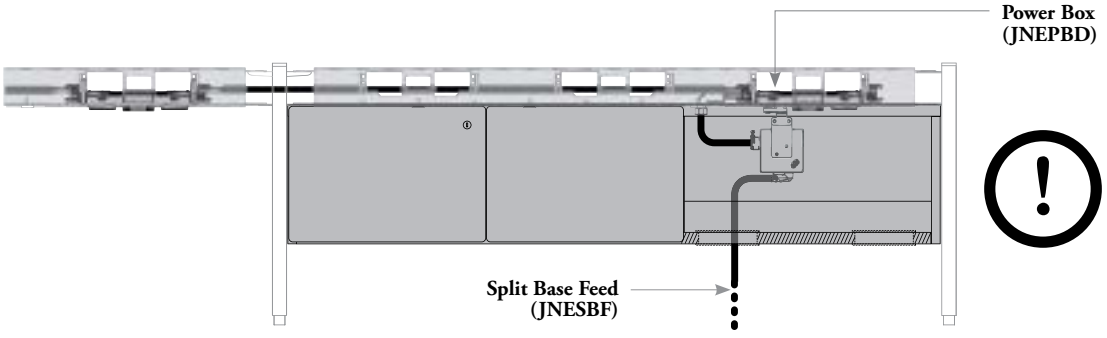

planning with standard power distribution for ez fence suspended storage (continued)

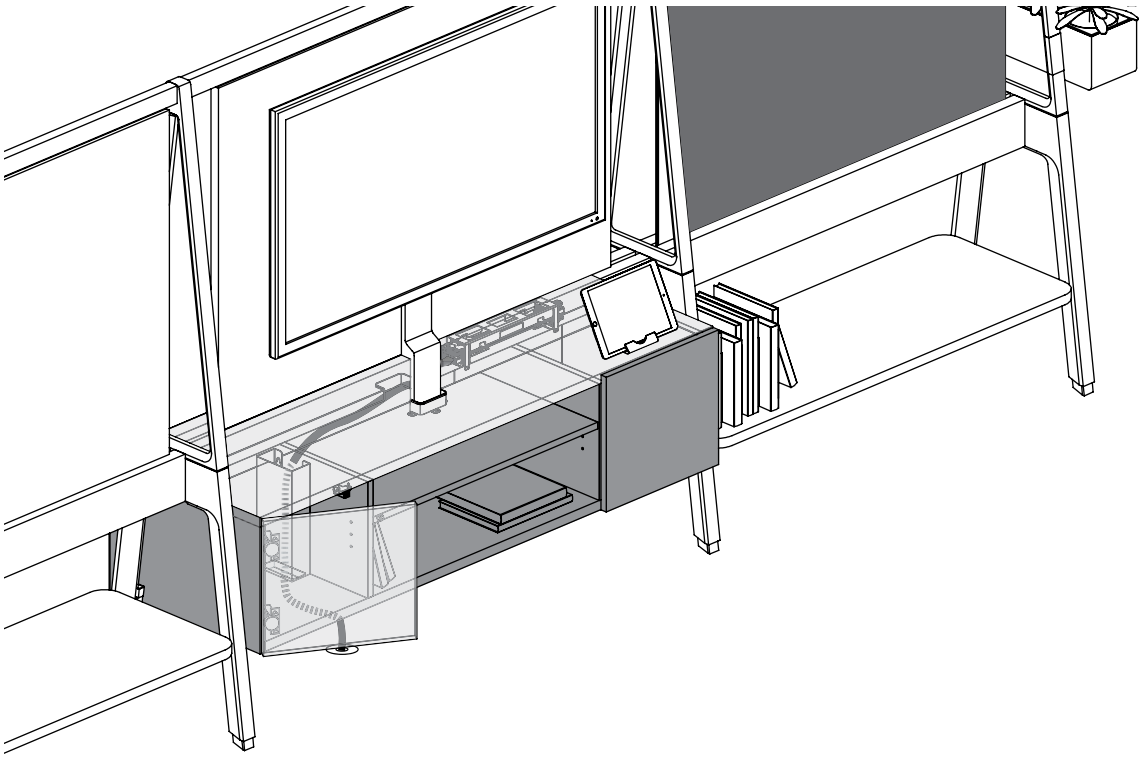

EZ Suspended Credenza – Media Center – Single-Sided (JZBSM)

- When planning with a Base Feed, the entry point in the EZ Suspended – Media Center – Single-Sided, can only be routed through the door sections. A grommet at the bottom of each door section and one Infeed Channel to cover the Base Feed and Data Cables in the section used are included
- These grommets and channels can be used to route Base Feed, Data Cable or Power Cord
- The Base Feed **cannot** be routed through the center shelf section
- Only Power Cord or Data Cable can be routed through the center shelf section

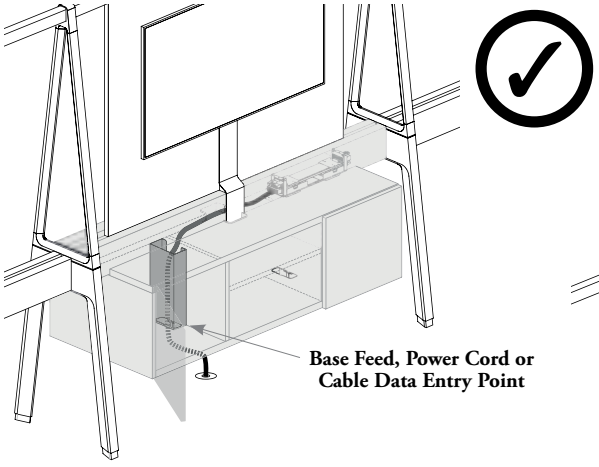

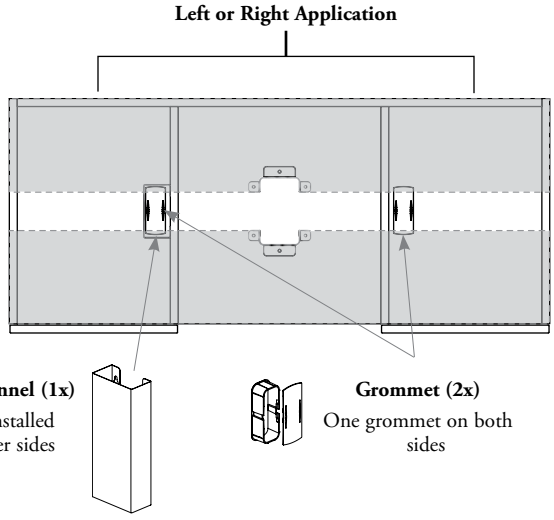

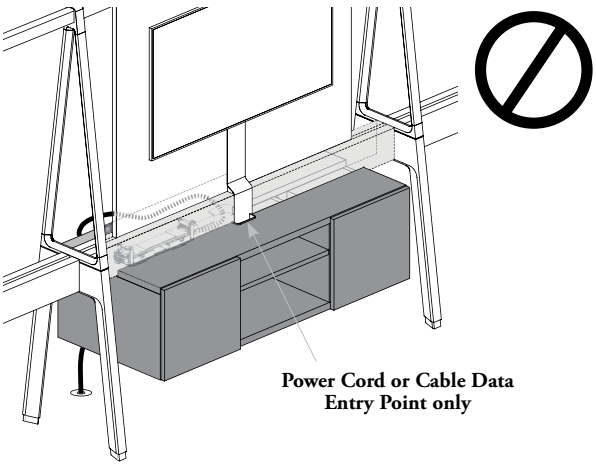

planning with standard power distribution for ez fence suspended storage (continued)

- It is recommended to use the Facing Down Power Module (JNEPBD). The cable management will be hidded in de credenza and no wire will be visible on top of the credenza
- It is **not** recommended to use the Facing Side Power Module (JNEPBB) because all wires will be visible on top of the credenza and there will be no cable management solution available

base feed applications

In smallest dimensions, the Power Box must be placed at the opposite side of the base feed entry point

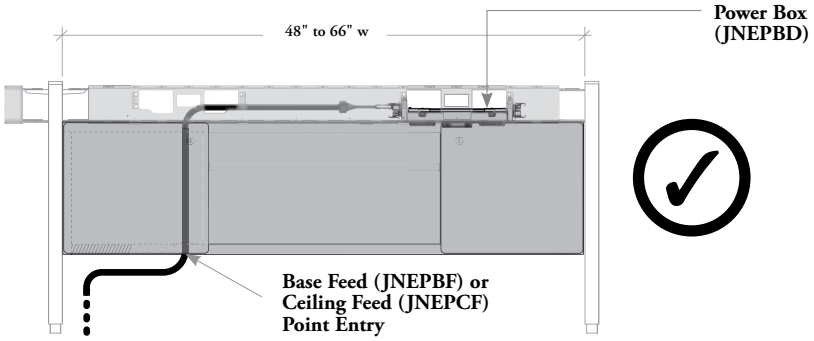

In wider dimensions, the Power Box can be placed on the same side as the base feed entry point. Using opposite sides work as well

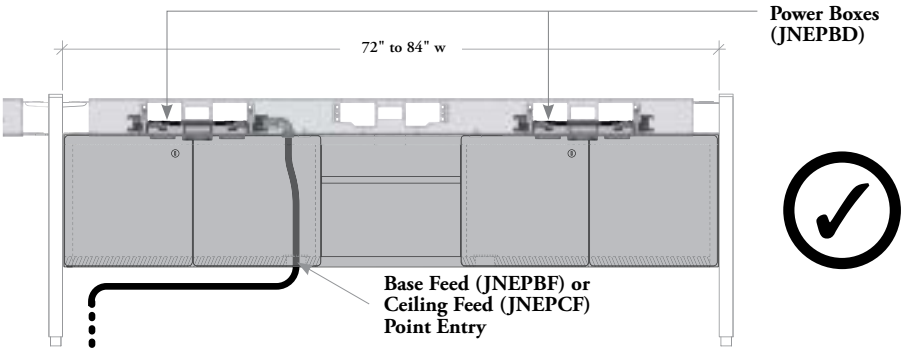

In the 66" and up widths, the Power Module can be placed in the middle of the beam, but it is **not** recommended, because the power plugs and wire will be visible in the open section an may interfere with electronic devices placed on the shelf

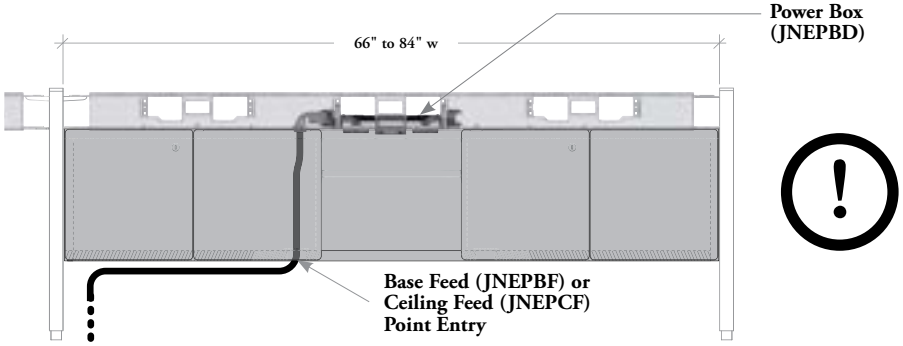

planning with standard power distribution for ez fence suspended storage (continued)

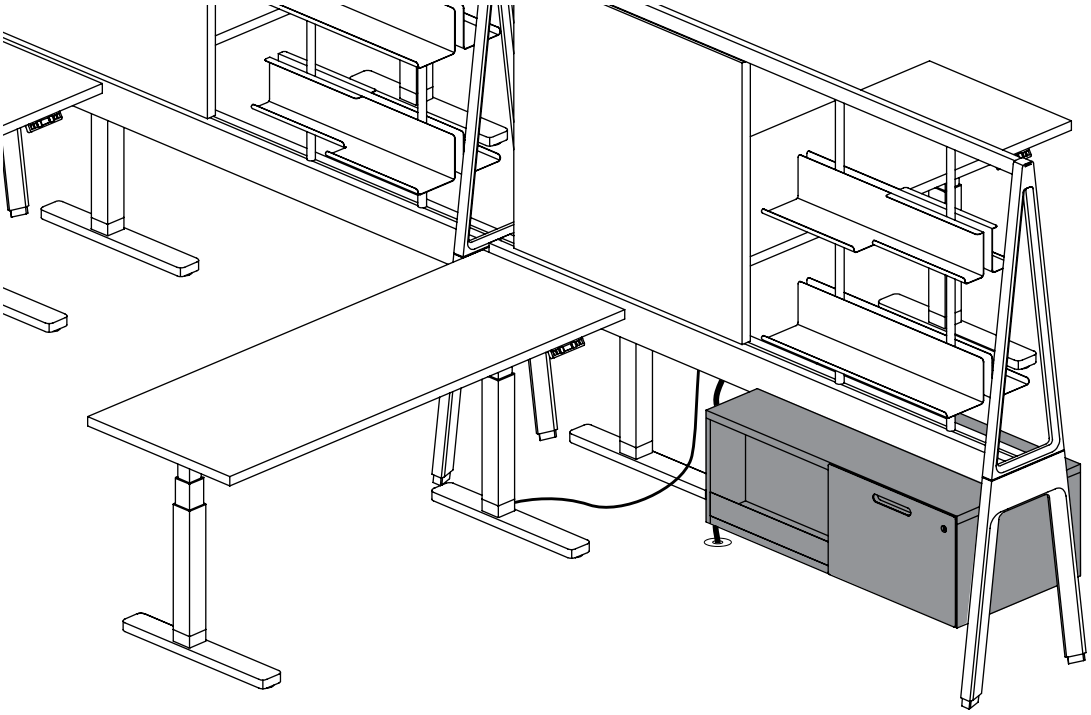

EZ Off-Module Suspended Credenza – Lateral File and Cubby – Shared (JZBDO)

- When planning with a EZ Off-Module Suspended Credenza, the Base Feed **cannot** enter in the beam through the credenza. It must be routed to the beam outside the credenza
- No removable back panel that allows access to the beam/Power Module
- No Facing Down (D) or Facing Sides (S) mounted Power Box can be installed over the EZ Off-Module Suspended Credenza

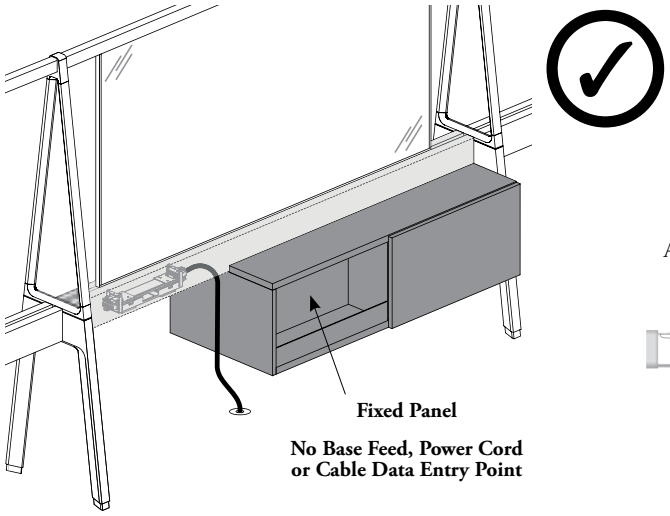

A minimum of 30" recess is needed to connect a Base Feed to a Facing Down Power Module

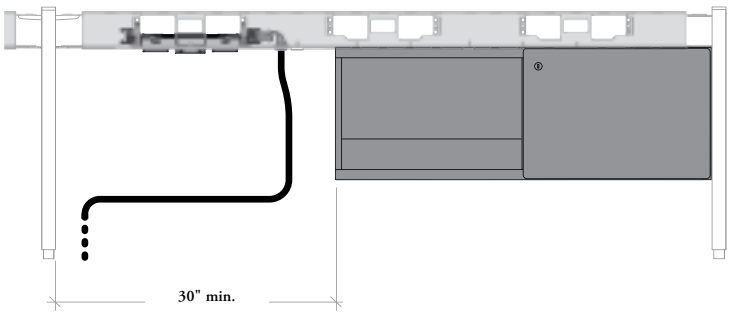

power harness length with standard power distribution for height-adjustable run-off

The following must be considered when planning user power with Height-Adjustable Run-Off in Expansion Cityline.

determining power harnesses length

single- or double-sided (shown) workstation – parallel application

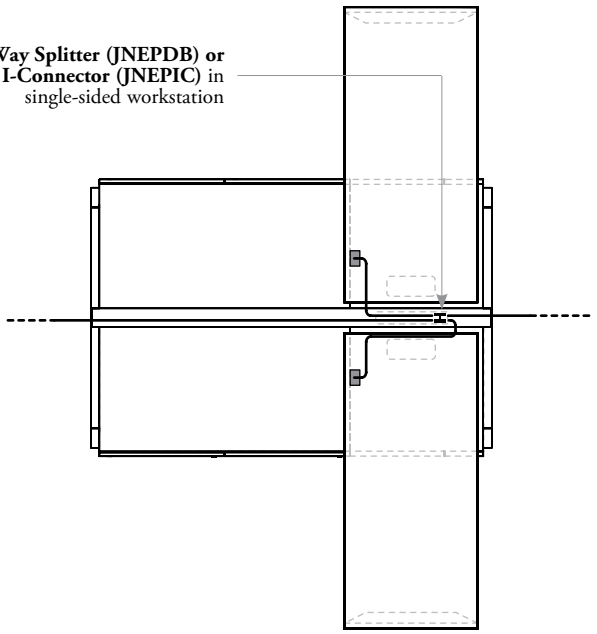

adjacent right to next workstation

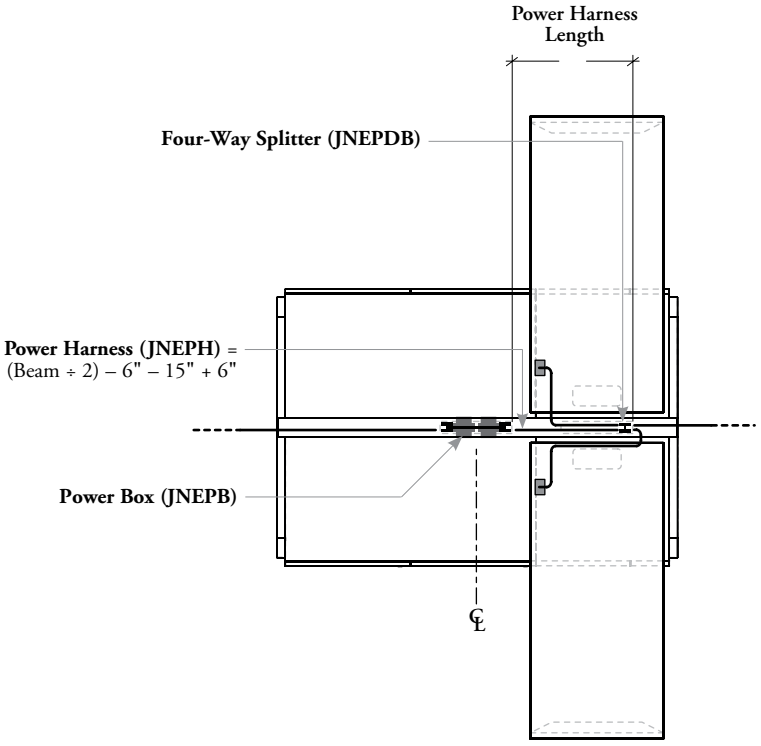

adjacent right to centered position

power harness length with standard power distribution for height-adjustable run-off (continued)

determining power harnesses length (continued)

single- or double-sided (shown) workstation – parallel application (continued)

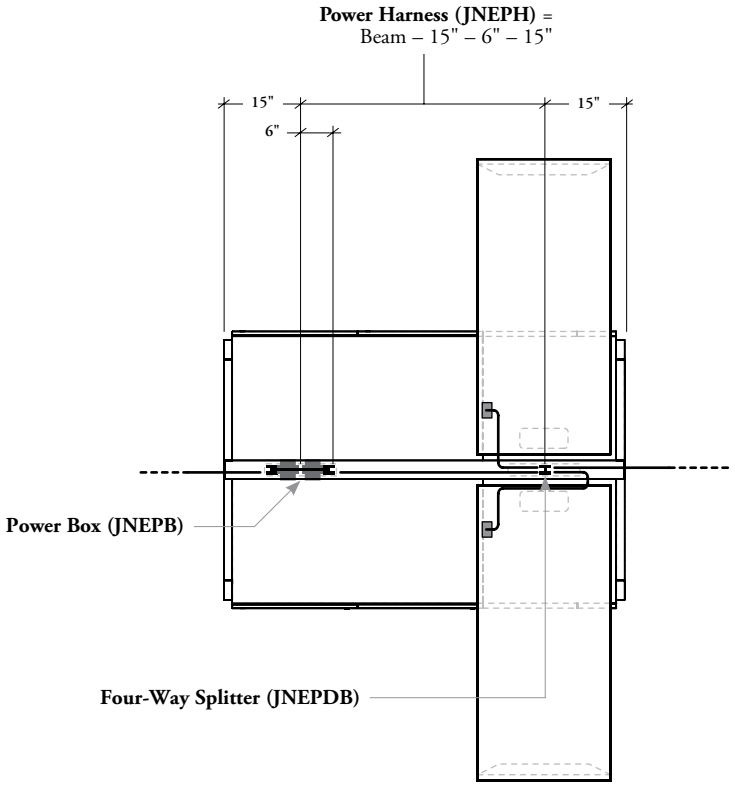

adjacent right to left position

double-sided workstation – offset application

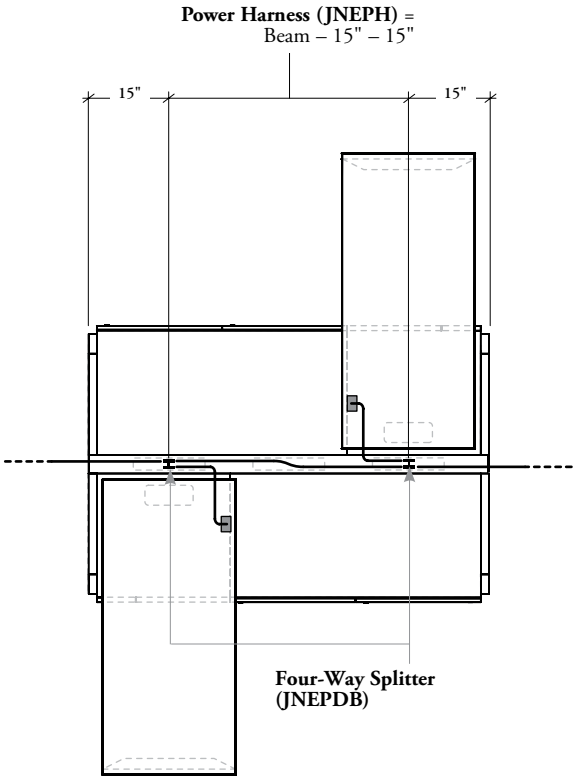

adjacent right to adjacent left

power harness length with standard power distribution for height-adjustable run-off (continued)

determining power harnesses length (continued)

double-sided workstation – offset application (continued)

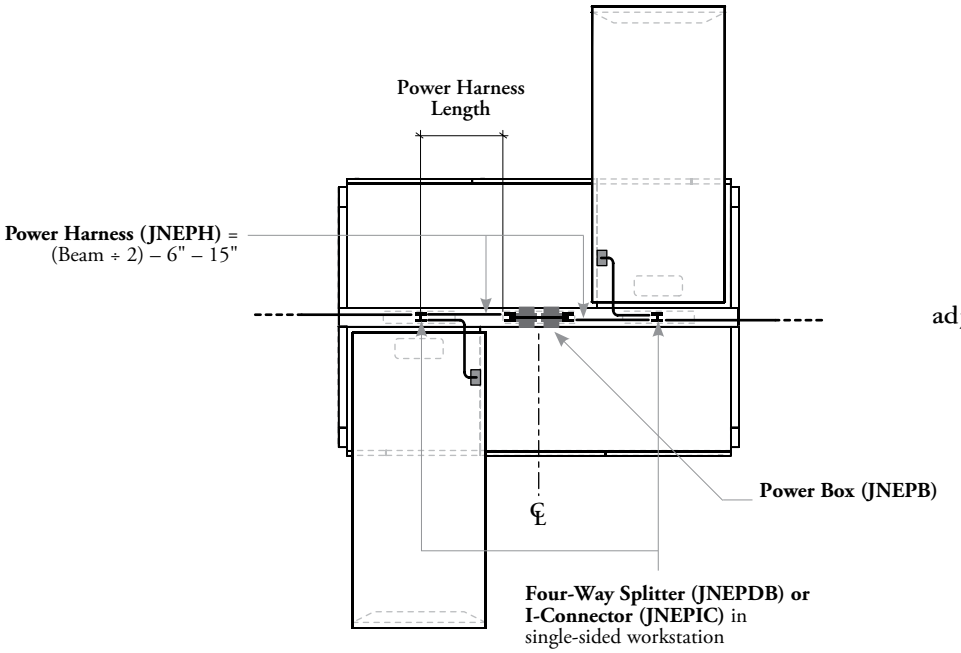

adjacent to center position

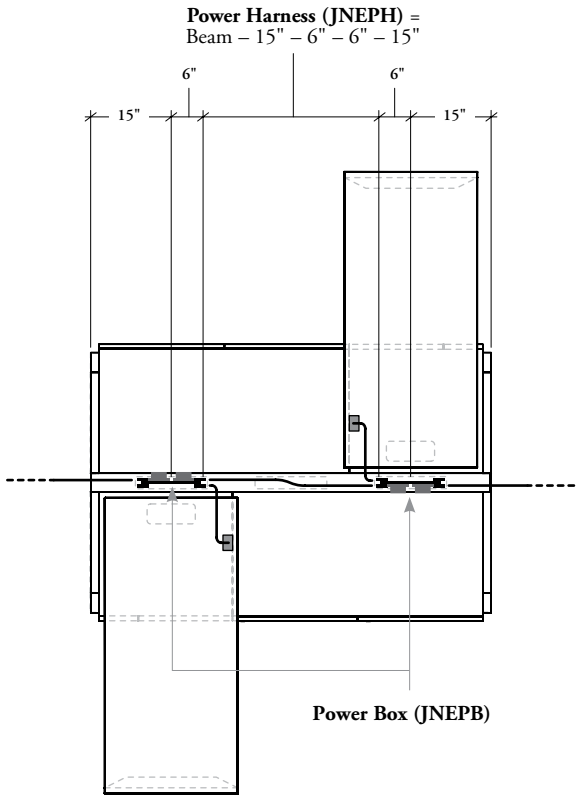

right to left position

wiring systems

Four wiring systems are available for Expansion Cityline, 7-Wire Non Isolated Ground (7T), 7-Wire Dual Non Isolated (7K), 8-Wire Isolated Ground (8T) and 8-Wire Dual Isolated (8K). Most common Teknion wiring configurations are achieved with wire systems.

- It is important to specify each power product accordingly with the wire system in use
- For sites where Isolated Ground is **not** available, Teknion offers Non-Isolated Ground options for furniture wiring. The site electrician or electrical contactor/consultant can identify sites where Isolated Ground is **not** available. For those sites, please specify Teknion 7T or 7K wiring systems

	No. Regular Circuit	No. Isolated Circuit
7-Wire Non Isolated Ground (7T) Neutral (White) Circuit 1 (Black) Circuit 2 (Red) Circuit 3 (Blue) Ground (Green) Neutral (White/Orange) Circuit A (Orange)	4	0
7-Wire Dual Non Isolated (7K) Neutral (White) Circuit 1 (Black) Circuit 2 (Red) Neutral (White/Orange) Circuit A (Orange) Circuit B (Blue) Ground (Green)	4	0
8-Wire Isolated (8T) Circuit 1 (Black) Circuit 2 (Red) Circuit 3 (Blue) Neutral (White) Ground (Green) Isolated Circuit 5 (Orange) Isolated Neutral (White/Orange) Isolated Ground (Green/Orange)	3	1
8-Wire Dual Isolated (8K) Circuit 1 (Black) Circuit 2 (Red) Neutral (White) Ground (Green) Isolated Circuit 5 (Orange) Isolated Circuit 6 (Blue) Isolated Neutral (White/Orange) Isolated Ground (Green/Orange)	2	2

wiring system/receptacles

	Wiring System			
	7T	**7K**	**8T**	**8K**
Regular Circuit 1 Receptacle	✓	✓	✓	✓
Regular Circuit 2 Receptacle	✓	✓	✓	✓
Regular Circuit 3 Receptacle	✓		✓	
Isolated Circuit 5 IG Receptacle			✓	✓
Isolated Circuit 6 IG Receptacle				✓
Regular Circuit A Receptacle	✓	✓		
Regular Circuit B Receptacle		✓		

✓ Applicable

receptacle outlets

- Outlets are available in 15, 20 amp or USB

15 amp

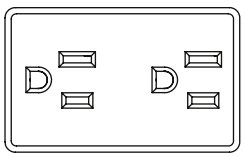

20 amp

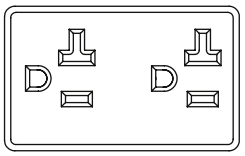

- Outlets are available with marking indicating it is connected to a control system in both 15 and 20 amp options
- The 20 amp is only available in Black

USB

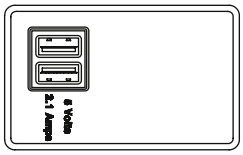

- USB receptacle is only available in Circuit 1
- USB Outlets provide 5 VDC 2.1 amp

planning with chicago power distribution for height-adjustable run-off

The following must be considered when planning user power with Height-Adjustable Run-Off in Expansion Cityline.

- All cables illustrated in dash below must be supplied and connected by a local electrician
- Standard feeds and harnesses **cannot** be specified with all Chicago electrical products

determining required components

single- or double-sided (shown) workstation – parallel application

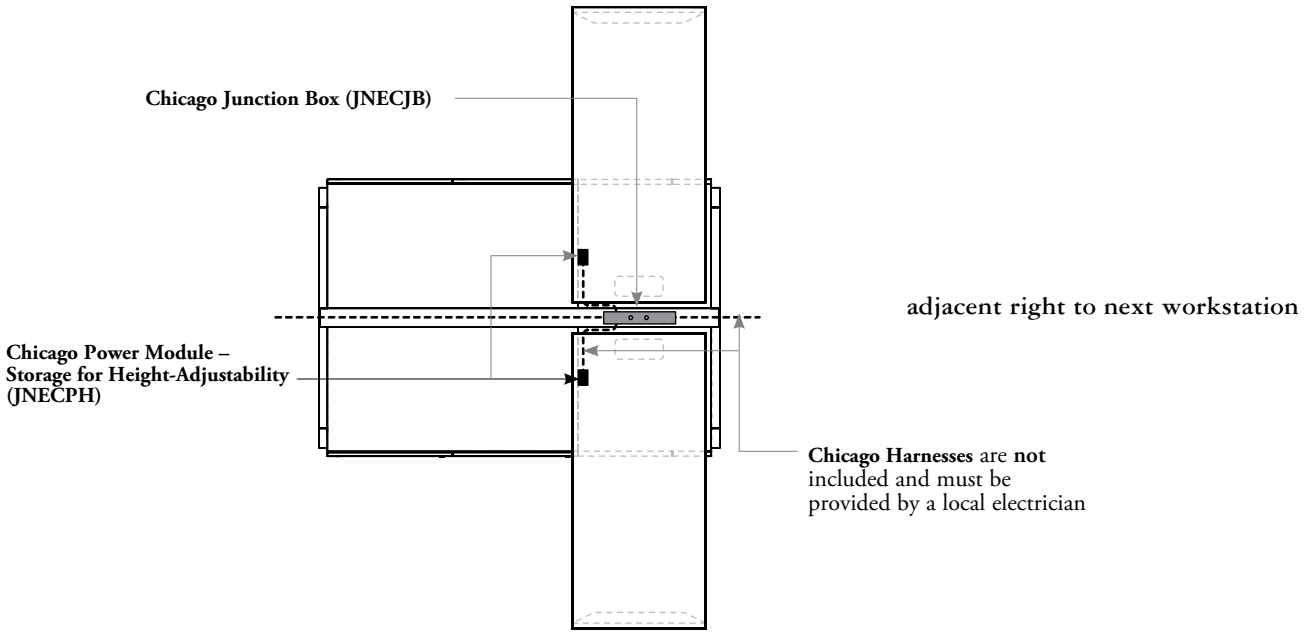

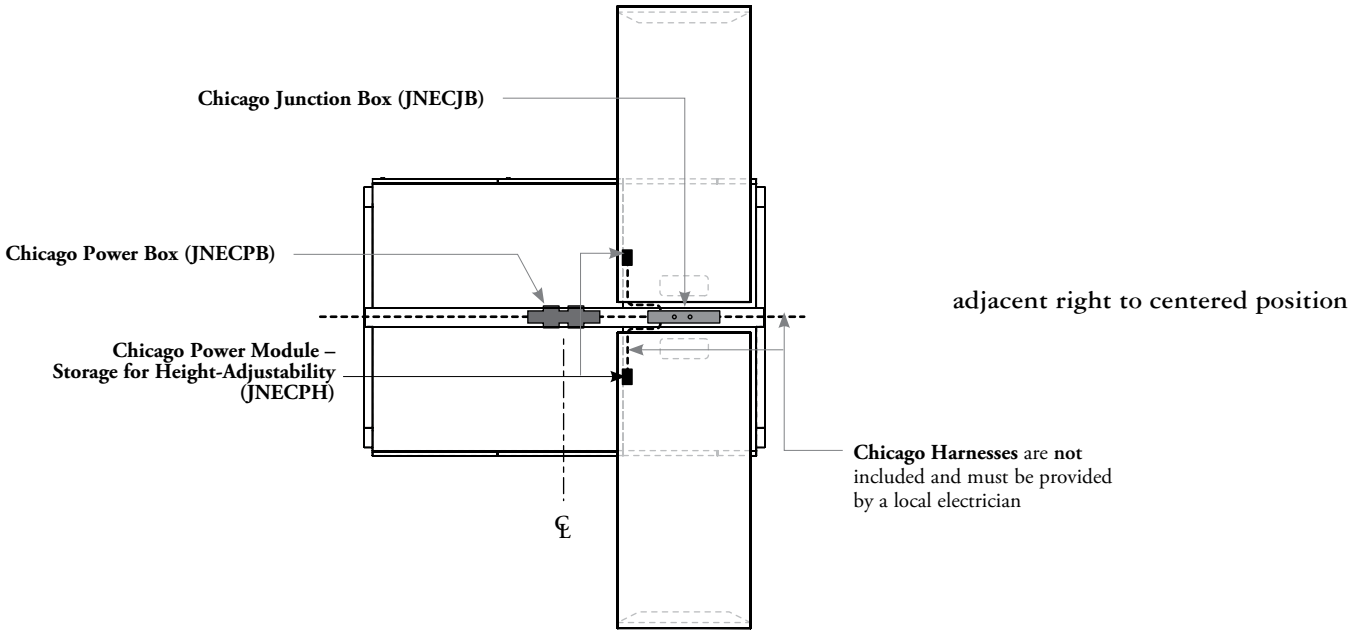

planning with chicago power distribution for height-adjustable run-off (continued)

determining required components (continued)

single- or double-sided (shown) workstation – parallel application (continued)

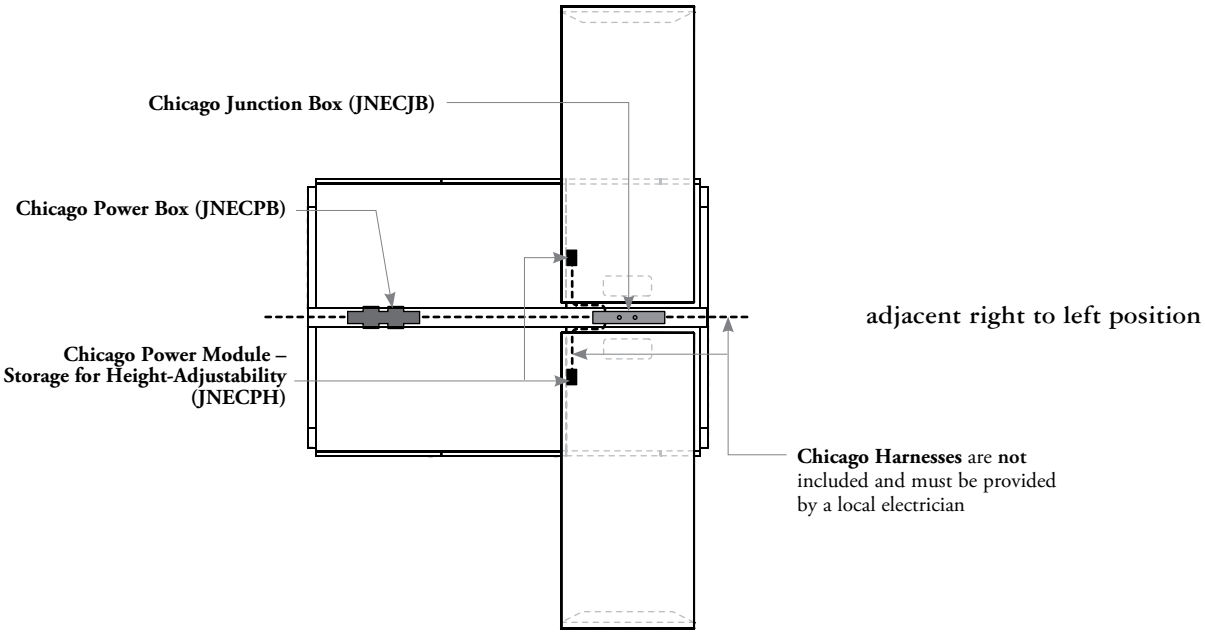

double-sided workstation – offset application

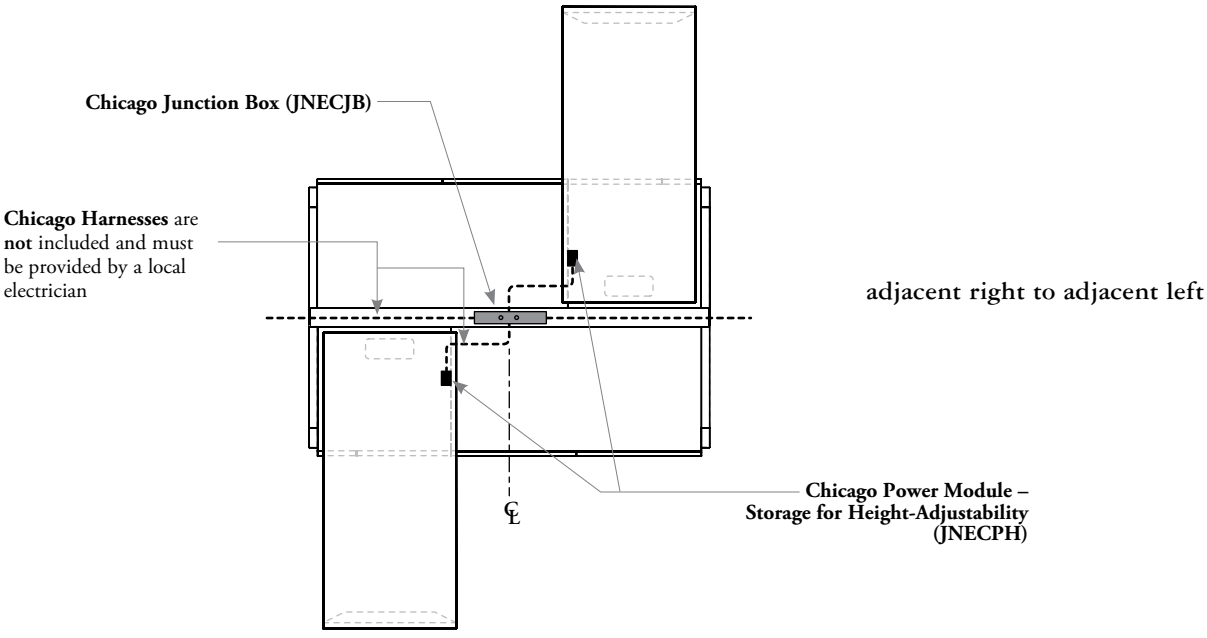

planning with chicago power distribution for height-adjustable run-off (continued)

determining required components (continued)

double-sided workstation – offset application (continued)

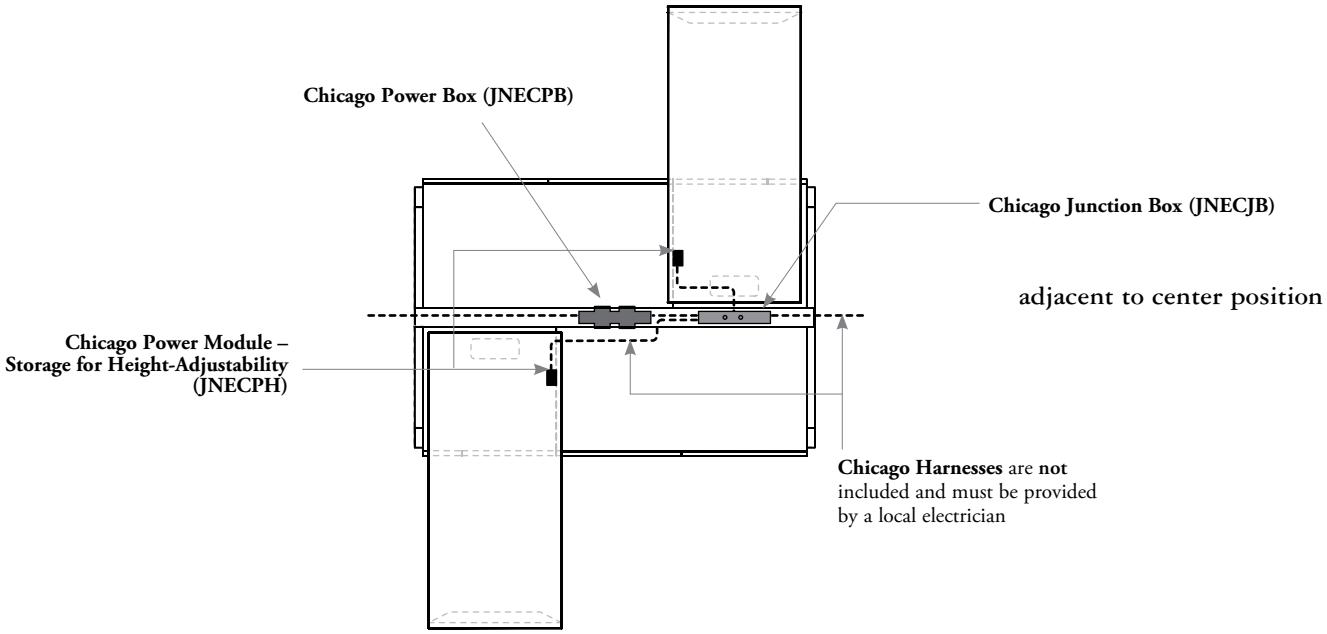

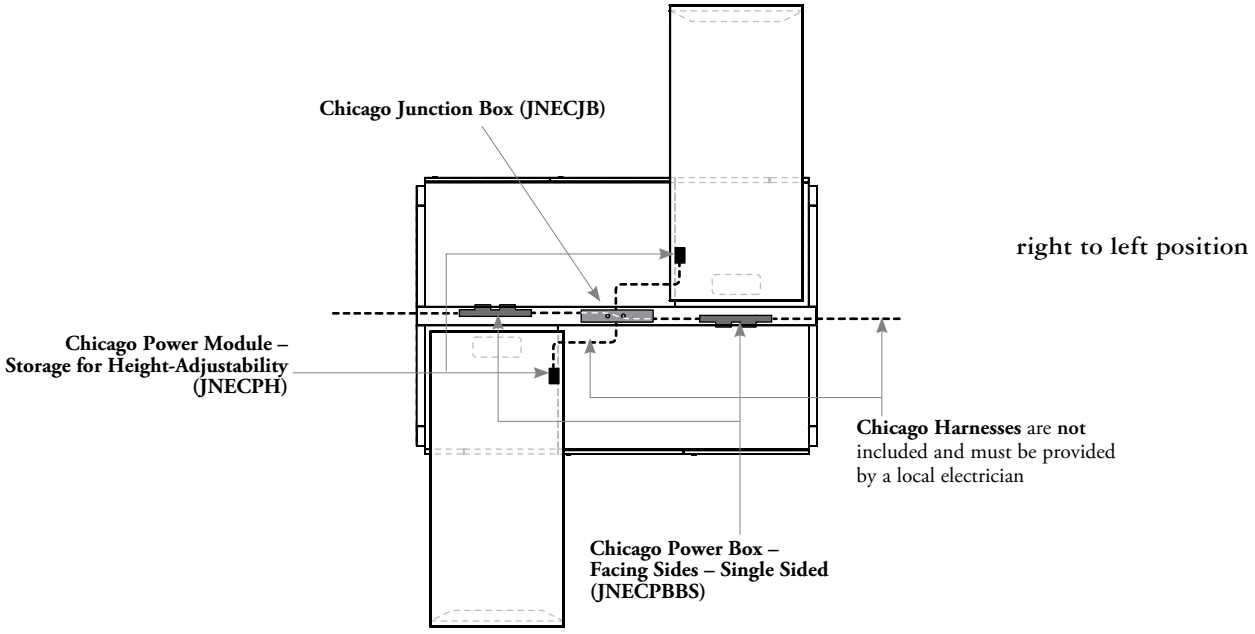

power & communications management and user access

Cable management and user access to power/communication must be considered when planning workstations in Expansion Cityline.

Worksurfaces can be mounted on or without Structural Beam. Both mounting styles require different components to provide access to power/communication and for cable management

beam-mounted worksurfaces

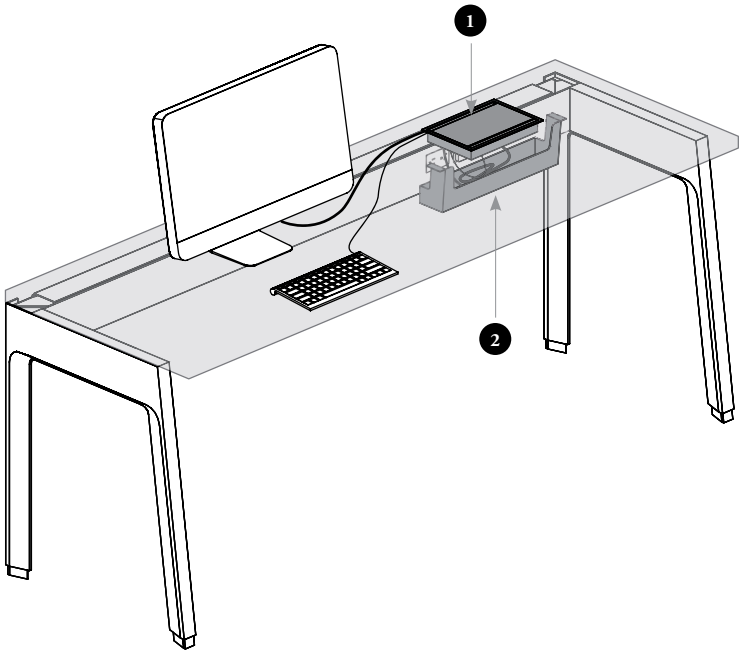

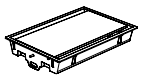

1 Access Door (JNEAD)

- Access Door can be specified as an option on worksurface or can be field-installed for direct access to beam-mounted power/data
- Pivoting door provides two access for cables: on back for permanent devices and in front for daily use cables
- **Cannot** be used with Height-Adjustable Tables

Finishes: Foundation, Mica and Accent

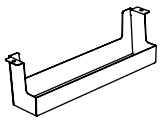

2 Cable Tray for Access Door (JNEWMT)

- The cable tray for Access Door attaches to the underside of a worksurface to manage extra wires from user devices
- **Cannot** be used with Height-Adjustable Tables

Finishes: Foundation, Mica and Accent

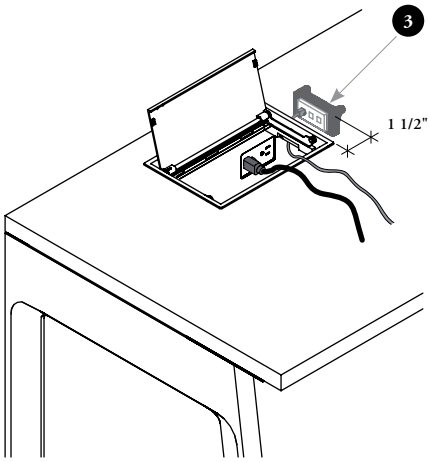

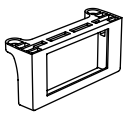

3 Communication Box (JNECB)

- The communication box can be attached to the underside of a worksurface to provide communication/data to user
- The communication box must be installed at 1 1/2" away from Access Door side to clear Receptacle Outlets

Finish: Platinum Coordinate

power & communications management and user access (continued)

unstructured worksurfaces & run-off for ez fence

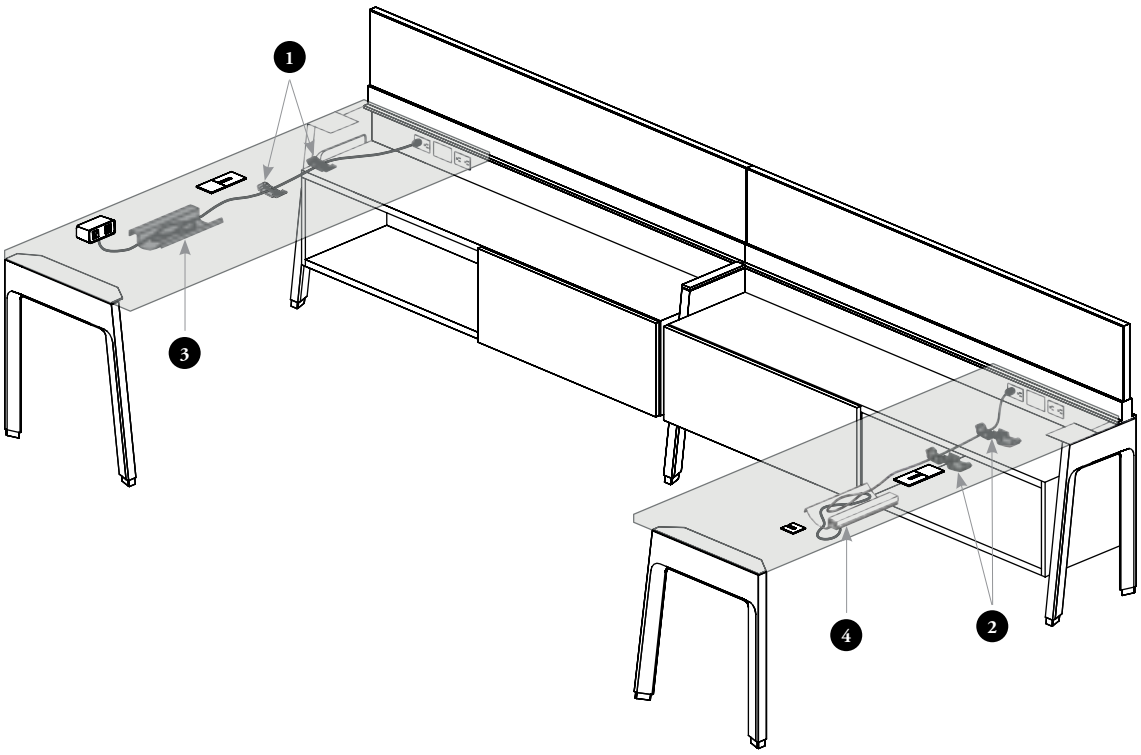

1 Single Wire Management Clips (JNEWCS)

- Manages and conceals power and data wires underneath the worksurface
- Single Wire Management Clips have flexible flange to retain power cord and smaller cables as data
- Included with worksurfaces for hiSpace or Navigate. Four clips for Rectangular Worksurface and six for 120° Worksurface
- When specified separately, six clips are included on a package

Finish: Black

2 Dual Wire Management Clips (JNEWC)

- Manages and conceals power and data wires underneath the worksurface
- Dual Wire Management Clips have an open section to manage big cables such as power cord/harness and another one with flexible flange to retain smaller cables as data
- Two are supplied with each worksurface and more can be ordered separately

Finish: Black

3 Cable Tray (JNEWPT)

- Is mounted underneath worksurfaces to manage cables coming from the worksurface level
- Allows installation of Underworksurface Plug-In Power Bar (JNEPP) only
- One is supplied with each worksurface with grommets or Access Door and more can be ordered separately

Finish: Black

4 Underworksurface Plug-In Power Bar (JNEPP)

- This product can be clipped on Cable Tray (JNEWPT)
- Provides a 3-wire system that can be used to connect up to four devices and includes a resettable breaker
- This product includes 72" or 180" power cord with flat 45° plug

Finish: Clear Anodized

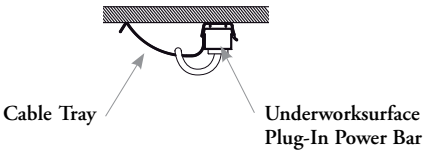

power & communications management and user access (continued)

unstructured worksurfaces & hispace or navigate height-adjustable tables

Felt Cover Cable Organizer (JNEWYA)

- Provides a unique and residential solution for cable management under the worksurface
- Can be used with fixed-height worksurface or Height-Adjustability products
- **NOTE:** Can interfere with a worksurface cut-out, worksurface structure or screen bracket. Possibility and position must be validated with specification software
- Two configurations are available:
  - – Small Cable Organizer (01)
  - – Large Cable Organizer (03)
- Felt Cover Size:
  - – 28" w x 6" d (Small)
  - – 28" w x 7 1/2" d (Large)
- Three Velcro® bands are included for wire management

Felt Finish: Grey Felt only
Mounting Bracket Finishes: Anthracite

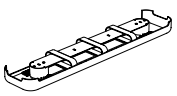

Small Cable Organizer (01)

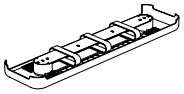

Large Cable Organizer (03)

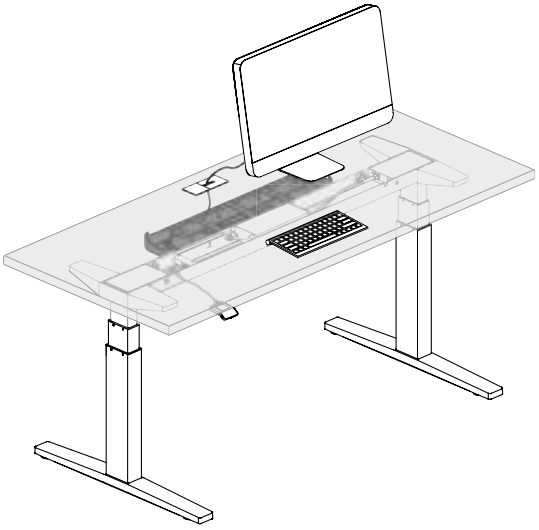

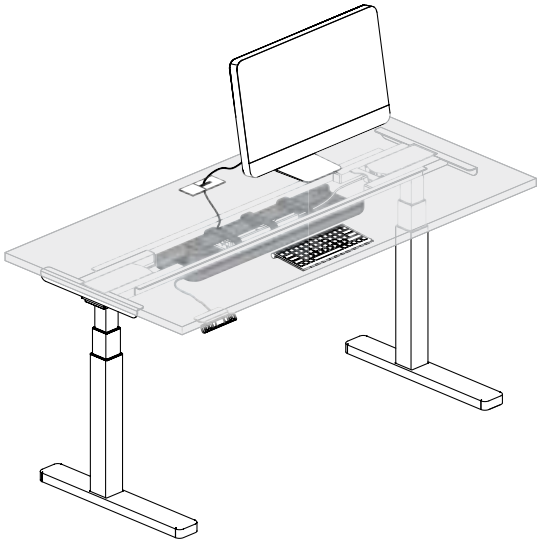

Navigate Height-Adjustable Table Applications

- Opened on one side to allow access to Navigate external and Cross Channel Integrated Powerbars
- Large Cable Organizer is compatible with 29" deep Rectangular Worksurface for Navigate Base only
- Small Cable Organizer is compatible with 23" and 29" deep Rectangular or 120° Worksurface for Navigate Base
- Compatible with 46" to 82" wide Rectangular Worksurface and 46" to 64" wide 120° Worksurface for Navigate Bases
- Also compatible with 43" wide 120° Worksurface on the side with the leg positioned at standard position only

hiSpace Height-Adjustable Table Applications

- The Cable Organizer with Felt Cover (JNEWYA) is optional with hiSpace Height-Adjustable Mechanism. Comes with hiSpace table mechanism or be retrofittable if it has **not** been selected previously
- Large and small Cable Organizer is compatible with Rectangular or 120° Worksurface for hiSpace Quick Connect Height-Adjustable Mechanism
- Compatible with 46" to 70" wide Rectangular Worksurface with User Optimized Width configuration
- Compatible with 52" to 70" wide Rectangular Worksurface with Standard Width configuration
- Also compatible with 49" to 58" wide 120°Worksurface with Standard Width configuration

power & communications management and user access (continued)

The Power Qube is a 3-wire alternative to provide power/communication/USB charging above and under worksurfaces.

- The product below can be specified separately
- Power Qube must be plugged into a wall outlet
- **Not** all power cord lenghts, plug types and configurations are available. Refer to individual product page for details

Dual (D)

Quad (Q)

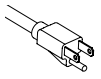

Plug-In (A) (Canada/U.S.A.)

OR

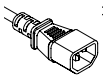

IEC Connector (C) (Canada/U.S.A.)

Power Qube (JNEPC)

- Provides power, data or USB charging access above worksurface
- Fits into Square Cut-Out Ring on worksurfaces and is installed without tools. The Square Cut-Out option must be specified on worksurfaces for installation
- Can also be field installed using the template and grommet ring of the Square Grommet (ordered separately)
- Voice/Data jacks are **not** included and must be field supplied and installed
- Each USB Outlet has one USB-A port and one USB-C port for charging only
- The USB-A port always supplies 10 Watts maximum at 5 Volts DC when used alone
- **Standard USB-C Capacity (S):**
  - The USB-C port supplies 18 Watts maximum at 5 to 12 Volts DC when used alone
  - Maximum combined output is 15 Watts when both ports are used together: 5 Watts for USB-A port and 10 Watts for USB-C port
- **High USB-C Capacity (H):**
  - The USB-C port supplies 65 Watts at 5 to 20 Volts DC when used alone
  - Due to limitations with transformer design, the maximum combined output is 30 Watts when both ports are used together: 10 Watts for USB-A port and 20 Watts for USB-C port
  - This reduced output in dual port mode **will not** support charging of laptops or quick charging of some phones/tablets that require more than 5 Volts DC
  - The USB-C port will charge laptops up to 65 Watts and support Quick Charge when used in single port mode
- Plug-In (A) Connector is plugged directly into standard receptable outlets
- IEC Connector (C) is plugged directly into the Frame Integrated Power Bar with IEC Outlet of Navigate Height-Adjustable Base only. Reduces the cable management underneath the worksurface and also removes the cable management outside the table
- For more information about IEC Connector option (C), refer to One Table One Plug Application Guide in Complement: Teknion's Ergonomics & Accessories Programm
- This product includes 48", 72", 120" or 180" power cord length
- Power cord is a grey cloth covered type

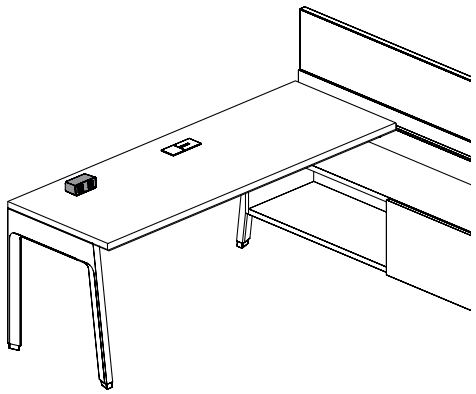

Finishes

Case & Front Finishes*: Foundation, Mica and Accent

* When **Under Worksurface (U) option** is specified, the underworksurface bracket will match the Case and Front finish

- Two mounting options are available

Square Cut-Out (Q)

- Fits into Square Grommet Ring on Standard Solid Top and a twistable attachment ring allows to tight the Qube casing between the top and bottom worksurface. The Square Cut-Out mounting option must be specified on worksurfaces for installation
- Permanent equipment cords can pass through the square cut-out using the side slot

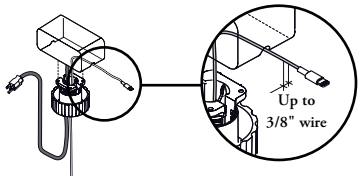

Under Worksurface (U)

- Fixes below a Standard Solid Top
- Refer to specification software for Under worksurface Power Qube location

Dual Power Qube (D)

Quad Power Qube (Q)

Configuration	D101N	D120S**	D200N	Q202N	Q221H*	Q221S**	Q240S**	Q320H*	Q320S**
Power Simplex Receptacle	1	1	2	2	2	2	2	3	3
USB	0	2	0	0	2	2	4	2	2
Communication Opening	1	0	0	2	1	1	0	0	0

* **H** = High USB-C Capacity
** **S** = Standard USB-C Capacity

power & communications management and user access (continued)

The Power Pill provides power/USB charging above meeting table worksurfaces.

- Used with meeting tables only to supply access to electrics
- **Cannot** be used on Expansion Cityline Worksurfaces
- Can be field-installed as per template included, except for Writable Glass Tables that power module cut-out must be specified in the product due to the glass top that **cannot** be cut on-site
- Plugs directly into standard receptacles

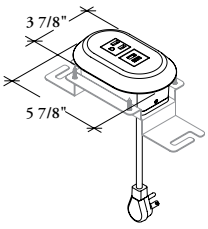

Dual Outlets Module

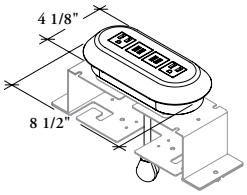

Quad Outlets Module

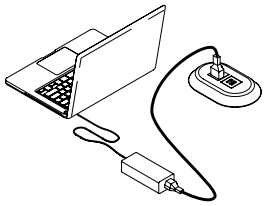

Power Pill Details

- Provides above worksurface power and USB access
- The brackets is always finished Greystone
- When Anthracite finish is specified, outlets default to Black
- When Crisp Grey or Platinum finish is specified, outlets default to Grey
- The Power Pill is available in four power configurations and two sizes that are predetermined depending on the cut out specified

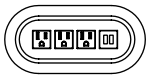

Quad – 3 Power/ 2 USB (D320)

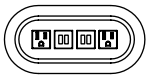

Quad – 2 Power/ 4 USB (D240)

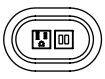

Dual – 1 Power/ 2 USB (D120)

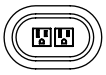

Dual – 2 Power/ 0 USB (D200)

- Are **not** included with meeting tables, refer to Meeting Table Configurations & Supports Chart in Meeting Tables section for more details

module configurations

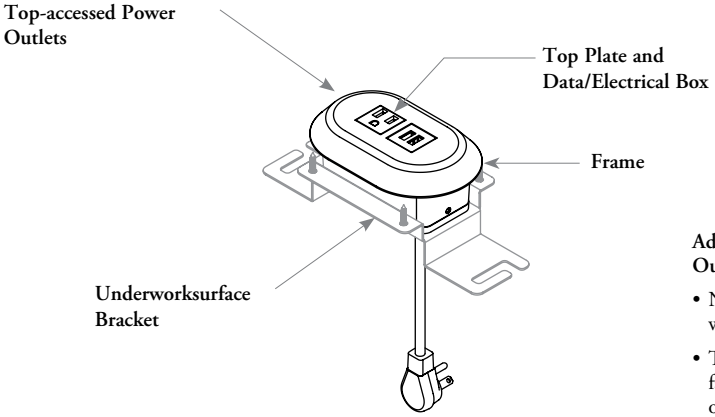

Additional Simplex Power Outlet

- No daisy chain allowed with other modules
- There will be a rear-facing power receptacle on the underside of the worksurface
- **Not** available with Quad Outlets Module Configurations

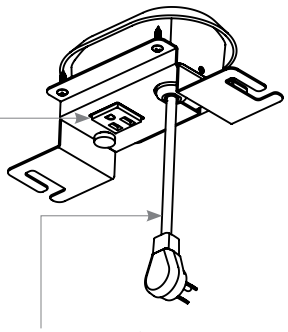

Power Cord is 120" or 180" long with 3-prong straight plug

module orientation in table

Module Position

As cut out in table for Power Pill is 4 5/8" by 2 1/4" or 7 3/4" by 3 1/4" pill, unit may be oriented in 1 of 2 directions

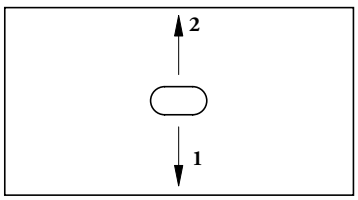

- When a Quad Outlets Power Pill is used, a 0" to 3/8" gap for cable routing is allowed. **No** gap when a Dual Outlets Pill is specified

power & communications management and user access (continued)

The Linear Power Module provides power/communication/USB charging above meeting table worksurfaces.

- Used with meeting tables only to supply access to electrics
- **Cannot** be used on Expansion Cityline Worksurfaces
- Can be field-installed as per template included, except for Writable Glass Tables that power module cut-out must be specified in the product due to the glass top that **cannot** be cutted on-site
- Plugs directly into standard receptacles

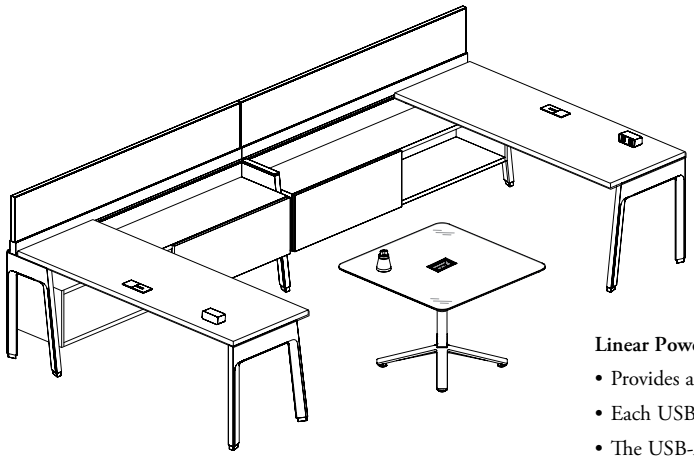

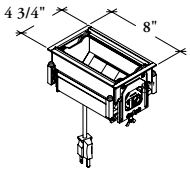

**Compact 8"
Configuration**

Linear Power Module Details

- Provides above worksurface power, USB access and Media Connections
- Each USB Outlet has one USB-A port and one USB-C port for charging only
- The USB-A port always supplies 10 Watts maximum at 5 Volts DC when used alone
- The USB-C port supplies 18 Watts maximum at 5 to 12 Volts DC when used alone
- Maximum combined output is 15 Watts when both ports are used together: 5 Watts for USB-A port and 10 Watts for USB-C port
- Outlets are finished in Soft Gris
- The Linear Power Module is available in four power configurations and two sizes that are predetermined depending on the cut-out specified

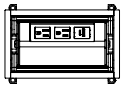

**Compact 8"–
2 Power/2 USB/0 Media
(C0220)**

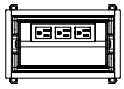

**Compact 8"–
3 Power/0 USB/0 Media
(C0300)**

- Are **not** included with meeting tables, refer to Meeting Table Configurations & Supports Chart in Meeting Tables section for more details

module configurations

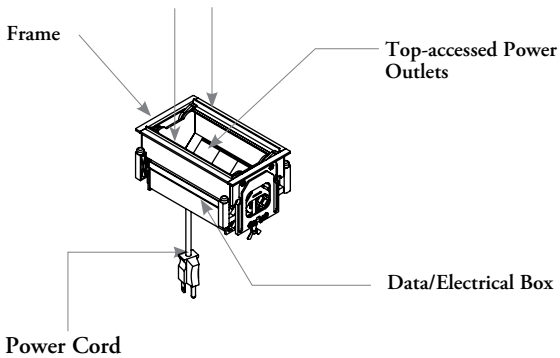

- Are available with 72" or 180" long with 3-prong straight plug

Module Position

As cut out in table for Lateral Power Module is 4 1/2" by 7 7/16" linear, unit may be oriented in 1 of 2 directions

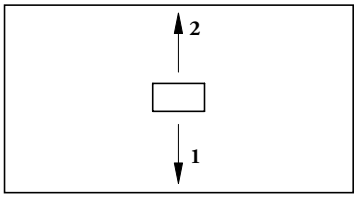

power & communications management and user access (continued)

Grommets provide aesthetic cables management when needed.

grommets

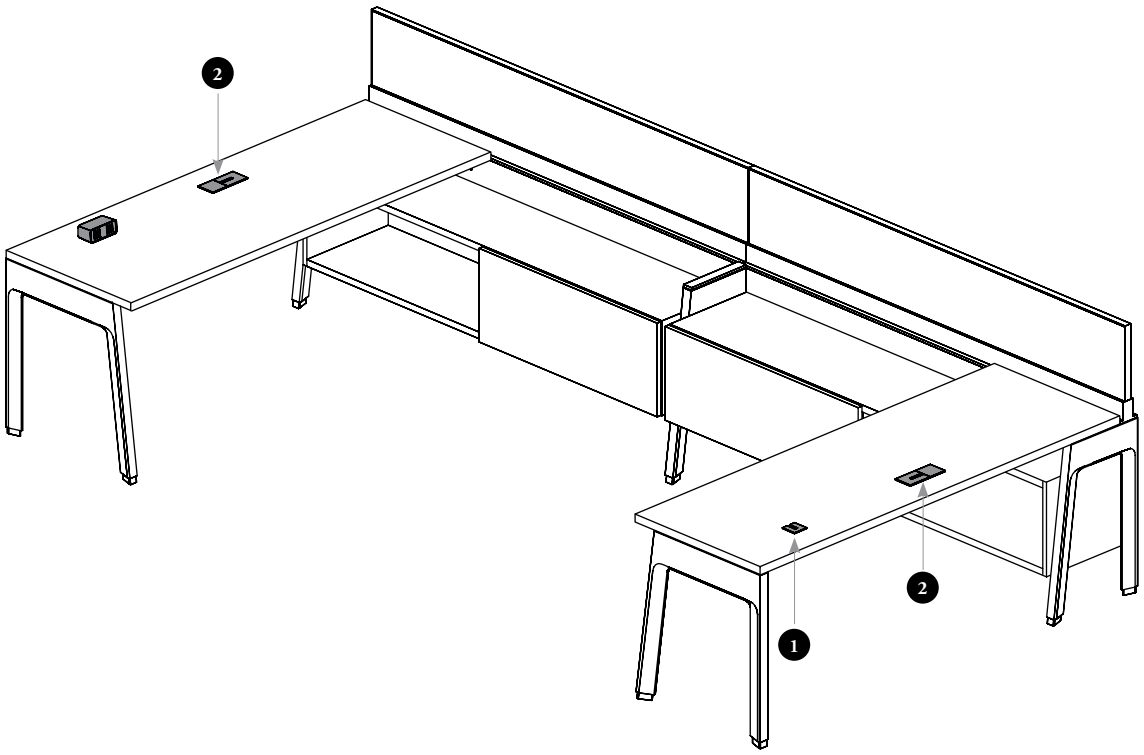

1

Square Grommet (JNEGQ)

- Square Cut-Out option must be specified on worksurfaces for an easy installation
- Grommet can also be field-installed as per template provided when cable management is needed
- The Square Grommet Ring allows installation of Dual or Quad Power Qube (JNEPC), which are **not** included and must be specified separately
- Cover can be secured in place with provided wood screws

Aluminum Cover Finishes: Foundation, Mica and Accent
Plastic Ring Finish: Soft Gris Coordinate (B)

- Square Grommet mounting:

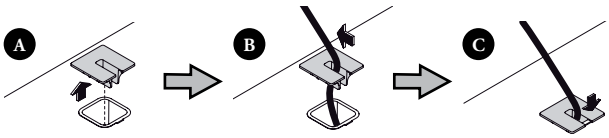

2

Rectangular Grommet (JNEGR)

- Rectangular Grommet option on worksurfaces or Diamond Cut-Out option on worksurfaces for hiSpace or Navigate Height-Adjustable Table must be specified for an easy installation
- Grommet can also be field-installed if specified separately as per template provided when cable management is needed
- Rectangular Grommet can be interchanged with Mast Monitor Arm – Expansion Grommet or Swerv Monitor Arm – Diamond Grommet mounting option and vice versa

Cover Finishes: Foundation, Mica and Accent

Plastic Ring Finish: Ebony (52)

- Rectangular Grommet mounting:

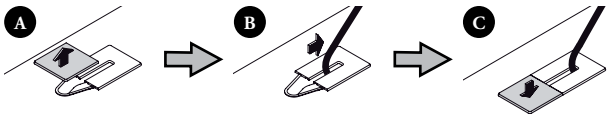

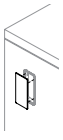

Gable Pass-Through Cover (JNEGPC)

- Covers the Gable Pass-Through ring and can be specified separatly when pass-through is not used

Finishes: Foundation, Mica and Coordinate Colors*

* **Coordinate Colors** are solid colors that can be used to match wood print: Royal Cherry (M8), Ivory Birch (NB), Provincial Oak (NC), Coastal Elm (ND), Espresso Reflect (Q4), Stainless (Q6), Walnut Cathedralgrain (Q7), Mercurial Walnut (Q9), Java Walnut (R7), Urban Walnut (R8), Choice Maple (R9), Estate Cherry (V1), Campus Oak (VD), Flax Reflect (VL), Pecan Reflect (VV), Cocoa Brown Reflect (W8) and Sycamore Reflect (W9)

price & product guide

price & product guide

EZ FENCE STRUCTURE 823

PRECONFIGURED EZ FENCE STRUCTURE 847

EZ LIFT & DROP TILES AND SHELVES 853

EZ FENCE SCREENS 877

EZ SUSPENDED STORAGE 919

DESK STRUCTURES 931

WORKSURFACES 959

HEIGHT-ADJUSTABILITY 1007

TABLES 1039

DESK ACCESSORIES 1045

WORKSTATION SCREENS 1055

LEG-MOUNTED SCREENS 1119

HEIGHT-ADJUSTABLE TABLE SCREENS 1155

price & product guide (continued)

CASUAL SCREENS & ACCESSORIES 1187

BEAM-MOUNTED STORAGE 1203

MOUNTED STORAGE 1233

CREDENZAS. 1253

FREESTANDING STORAGE 1265

LOCKERS. 1303

ACCESSORIES 1367

LIGHTING, ELECTRICS & COMMUNICATIONS. 1399

ez fence structure product map

J Z S B B EZ Fence Beam

Page 828

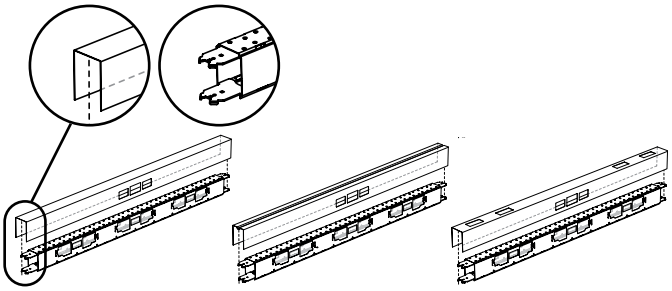

J Z S B S EZ Fence Beam for Corridor

Page 829

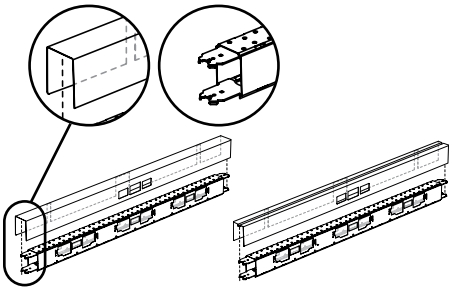

J Z S F L EZ Fence Leg – Low Height

Page 830

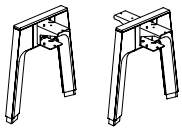

J Z S F S EZ Fence Leg

Page 831

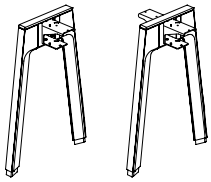

J Z S P S EZ Fence Post with Screen Connection

Page 832

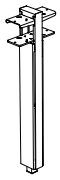

J Z S L S EZ Structural Leg – Single-Sided

Page 833

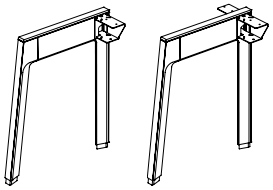

J Z S L D EZ Structural Leg – Double-Sided

Page 834

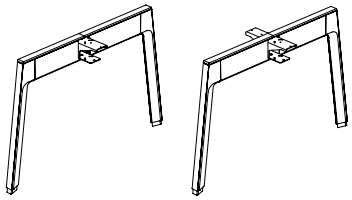

J Z S U D EZ Upper A-Frame – Shared

Page 835

ez fence structure product map

J Z S U S EZ Upper A-Frame – Single-Sided

Page 836

J Z S U R EZ Upper Rail for Lift & Drop Tile

Page 837

J Z S U L S EZ Upper A-Frame for Laminate Shelves – Shared

Page 838

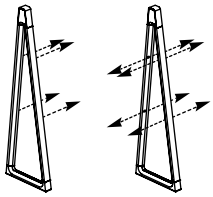

J Z S C B Chicago EZ Fence Beam

Page 839

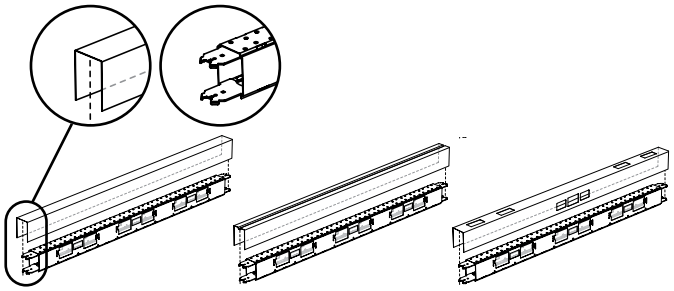

J Z S C S Chicago EZ Fence Beam for Corridor

Page 840

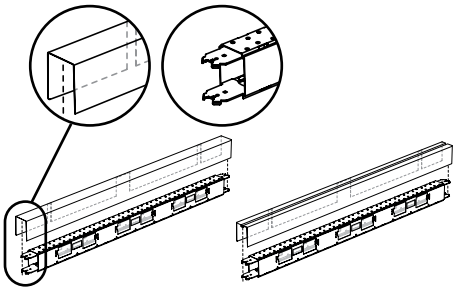

J Z W R F Run-Off for EZ Fence

Page 842

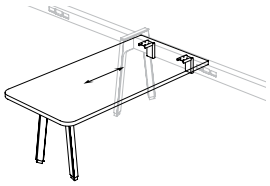

J Z S L C EZ Fence Leg Cover – Top

Page 844

J Z S B B
EZ Fence Beam

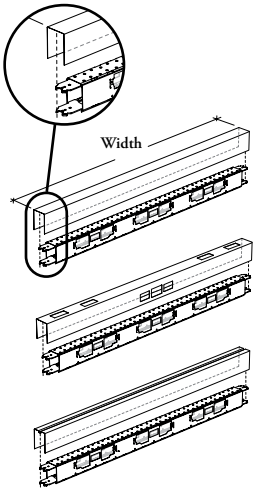

The EZ Fence Beam is a key structural element of the product providing horizontal support for Add-On Screens or a Lift and Drop Tile. It also carries electricity and data cabling across fence.

WHAT'S INCLUDED
1 ez fence beam cover (with or without power and data openings, (as specified)), cover mounting clips, facing down brackets, mounting hardware.

WHAT'S EXCLUDED
Power Box, Receptacle Outlet, Voice and Data Faceplates.

NOTES
When Power and Data Opening (NN) is specified, only Opening Position (N) is available.

When Power and Data Opening (DO, DT, PO or PT) is specified, only Opening Position (C, L or R) are available.

When 48" to 60" widths and Power and Data Opening (DO, DT, PO or PT) are specified, only Opening Position (L or R) is available.

When Power and Data Opening (DO, DT, PO or PT) is specified, a Communication Extender Plate (JNEDE) must be used to install Voice and Data Faceplate.

PRODUCT OPTIONS

Configuration	Width	Power and Data Opening	Opening Position	Finish
N No Screen	48, 54, 60, 66, 72, 78, 84	**DO** Power and Data – One Side	**C** Center	Foundation
S EZ Add-On Screen		**DT** Power and Data – Two Sides	**L** Left	Mica
T Lift and Drop Tile		**PO** Power Only – One Side	**R** Right	Accent
		PT Power Only – Two Sides	**N** No Opening	
		NN No Opening		

SAMPLE ORDER CODE

JZSBB N	66	DO	C	74

DIMENSIONS
INCHES / MM

W
48 / 1219
54 / 1372
60 / 1524
66 / 1676
72 / 1829
78 / 1981
84 / 2134

PRICING

NO SCREEN (N) or EZ ADD-ON SCREEN (S)	LIFT AND DROP TILE (T)
247	260
274	287
300	313
329	342
357	370
364	377
370	383

JZSBS
EZ Fence Beam for Corridor

The EZ Fence Beam for Corridor is a key structural element of the product providing horizontal support for Floor or Modesty Screen – EZ Fence Beam-Mounted. It also carries electricity and data cabling across workstations.

WHAT'S INCLUDED
1 ez fence beam cover for corridor (with or without power and data openings, (as specified)), cover mounting clips, facing down brackets, mounting hardware.

WHAT'S EXCLUDED
Power Box, Receptacle Outlet, Voice and Data Faceplates.

NOTES
When Power and Data Opening (NN) is specified, only Opening Position (N) is available.

When Power and Data Opening (DO or PO) is specified, only Opening Position (C, L or R) are available.

When 48" to 60" widths and Power and Data Opening (DO or PO) are specified, only Opening Position (L or R) is available.

When Power and Data Opening (DO or PO) is specified, a Communication Extender Plate (JNEDE) must be used to install Voice and Data Faceplate.

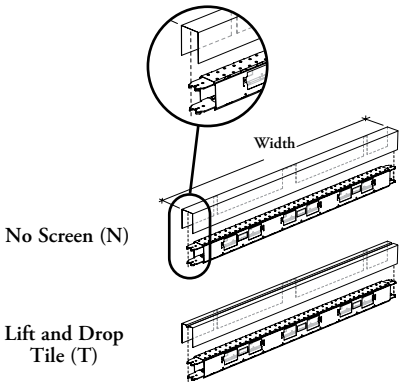

PRODUCT OPTIONS

Configuration	Width	Power and Data Opening	Opening Position	Finish
N No Screen	48, 54, 60, 66, 72, 78, 84	**DO** Power and Data – One Side	**C** Center	Foundation
T Lift and Drop Tile		**PO** Power Only – One Side	**L** Left	Mica
		NN No Opening	**R** Right	Accent
			N No Opening	

SAMPLE ORDER CODE

JZSBS N	66	DO	C	74

DIMENSIONS INCHES / MM

PRICING

W	NO SCREEN (N)	LIFT AND DROP TILE (T)
48 / 1219	247	260
54 / 1372	274	287
60 / 1524	300	313
66 / 1676	329	342
72 / 1829	357	370
78 / 1981	364	377
84 / 2134	370	383

J Z S F L
EZ Fence Leg – Low Height

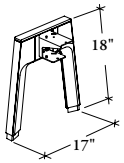

End (E)

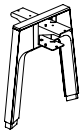
In-Line (I)

These low supports are used to connect and support the EZ Fence Beams at various configurations to create low fence application.

WHAT'S INCLUDED
1 ez fence leg (as specified), 1 top cover (as specified), 2 levelers, 2 leveler covers, slotted groove trims and mounting hardware.

NOTES
Leg height is 18" from the finished floor to the top cover of the desk structure with a leveling range of 3".

PRODUCT OPTIONS

Support Style	Depth	Configuration	Top Option	Finish
A Angled	17	**E** End	**C** Top Cover	Foundation
		I In-Line	**U** EZ Upper A-Frame Ready	Mica
				Accent

SAMPLE ORDER CODE

JZSFL A	17	E	C	74

DIMENSIONS
INCHES / MM

D
17 / 432

PRICING

END (E)		IN-LINE (I)	
TOP COVER (C)	EZ UPPER A-FRAME READY (U)	TOP COVER (C)	EZ UPPER A-FRAME READY (U)
455	437	486	469

JZSFS
EZ Fence Leg

These supports are used to connect and support the EZ Fence Beams at various configurations to create fence application.

WHAT'S INCLUDED
1 ez fence leg (as specified), 1 top cover (as specified), 2 levelers, 2 leveler covers, slotted groove trims and mounting hardware.

NOTES
Leg height is 29" from the finished floor to the top of the finished worksurface with a leveling range of 3".

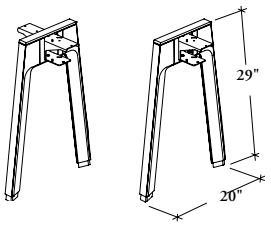

End (E) In-Line (I)

PRODUCT OPTIONS

Support Style	Depth	Configuration	Top Option	Finish
A Angled	20	**E** End	**C** Top Cover	Foundation
		I In-Line	**U** EZ Upper A-Frame Ready	Mica
				Accent

SAMPLE ORDER CODE

JZSFS A	20	E	C	74

DIMENSIONS INCHES / MM

D
20 / 508

PRICING

END (E)		IN-LINE (I)	
TOP COVER (C)	EZ UPPER A-FRAME READY (U)	TOP COVER (C)	EZ UPPER A-FRAME READY (U)
516	499	553	536

JZSPS

EZ Fence Post with Screen Connection

This post is used to connect and support EZ Fence Beams in combination with one or two Floor Screens – EZ Post-Mounted.

WHAT'S INCLUDED
1 ez fence post, 1 leveler, and mounting hardware.

NOTES
Post height is 29" from the finished floor to the top of the finished worksurface with a leveling range of 3".

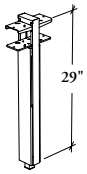

PRODUCT OPTIONS

Configuration	Finish
I In-Line	Foundation
	Mica
	Accent

SAMPLE ORDER CODE

JZSPS I	74

CONFIGURATION	PRICING
I	385

JZSLS
EZ Structural Leg – Single-Sided

These supports are used to connect and support the EZ Fence Beams in linear configuration to create fence application.

WHAT'S INCLUDED
1 ez structural leg (as specified), 2 levelers, 2 leveler covers, 1 top cover (as specified), slotted groove trims and mounting hardware.

NOTES
Leg height is 29" from the finished floor to the top of the finished worksurface with a leveling range of 3".

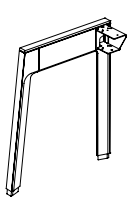

End – Left (L) or End – Right (R)

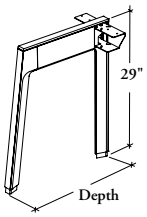

In-Line (I)

PRODUCT OPTIONS

Support Style	Depth	Configuration	Top Option (Leg)	Finish
A Angled	18, 24	**I** In-Line (Shown)	**C** Top Cover	Foundation
		L End – Left (Shown)	**U** EZ Upper A-Frame Ready	Mica
		R End – Right		Accent

SAMPLE ORDER CODE

JZSLS A	24	I	C	74

DIMENSIONS
INCHES / MM

PRICING

	END – LEFT (L) or END – RIGHT (R)		IN-LINE (I)	
D	TOP COVER (C)	EZ UPPER A-FRAME READY (U)	TOP COVER (C)	EZ UPPER A-FRAME READY (U)
18 / 457	560	532	612	585
24 / 610	588	n/a	639	n/a

J Z S L D
EZ Structural Leg – Double-Sided

These supports are used to connect and support the EZ Fence Beams in linear configuration to create fence application.

WHAT'S INCLUDED
1 ez structural leg (as specified), 2 levelers, 2 leveler covers, 2 top covers, slotted groove trims and mounting hardware.

NOTES
Leg height is 29" from the finished floor to the top of the finished worksurface with a leveling range of 3".

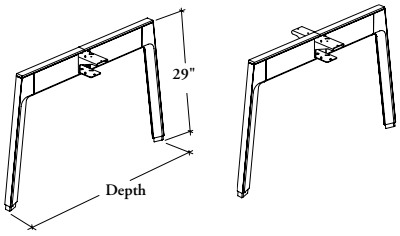

End (E)

In-Line (I)

PRODUCT OPTIONS

Support Style	Depth	Configuration	Top Option	Finish
A Angled	36, 48	**E** End	**C** Top Cover	Foundation
		I In-Line		Mica
				Accent

SAMPLE ORDER CODE

JZSLD A	48	E	C	74

DIMENSIONS
INCHES / MM

D
36 / 914
48 / 1219

PRICING

END (E)	IN-LINE (I)
651	701
716	735

JZSUD
EZ Upper A-Frame – Shared

This Upper A-Frame in combination of a EZ Upper Rail for Lift and Drop Tile (JZSUR) can support a variety of screens and casual storage to create a diverse range of privacy.

WHAT'S INCLUDED
1 ez upper a-frame and mounting hardware.

WHAT'S EXCLUDED
EZ Upper Rail for Lift and Drop Tile and EZ Fence Legs.

NOTES
57" or 66" Datum Height must be installed on a EZ Fence Leg (JZSFS).

56" Datum Height must be installed on a EZ Fence Leg – Low Shared (JZSFL).

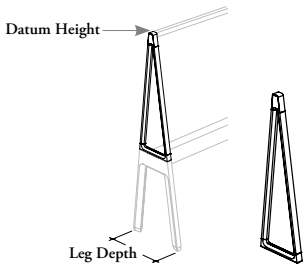

PRODUCT OPTIONS

Beam Height	Leg Depth	Datum Height	Frame Finish
C Standard Height (28") (Shown)	17, 20	56, 57, 66	Foundation
L Low Height (18")			Mica
			Accent

SAMPLE ORDER CODE

JZSUD C	20	57	68

DIMENSIONS INCHES / MM

PRICING

D	H	28" STANDARD HEIGHT (C)	18" LOW HEIGHT (L)
17 / 432	56 / 1422	n/a	266
17 / 432	57 / 1448	n/a	n/a
17 / 432	66 / 1676	n/a	n/a
20 / 508	56 / 1422	n/a	n/a
20 / 508	57 / 1448	255	n/a
20 / 508	66 / 1676	266	n/a

JZSUS
EZ Upper A-Frame – Single-Sided

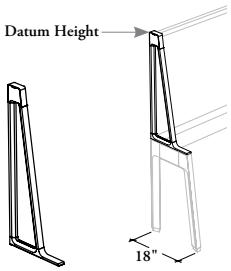

This Upper A-Frame in combination of a EZ Upper Rail for Lift and Drop Tile (JZSUR) can support a variety of screens and casual storage to create a diverse range of privacy.

WHAT'S INCLUDED
1 ez upper a-frame and mounting hardware.

WHAT'S EXCLUDED
EZ Upper Rail for Lift and Drop Tile and EZ Structural Legs – Single Sided.

NOTES
Only 18" deep EZ Structural Leg – Single-Sided (JZSLS) can be specified under this frame.

PRODUCT OPTIONS

Beam Height	Leg Depth	Datum Height	Frame Finish
C Standard Height (28")	18	57, 66	Foundation Mica Accent

SAMPLE ORDER CODE

JZSUS C	18	66	68

DIMENSIONS
INCHES / MM

D	H
18 / 457	57 / 1448
18 / 457	66 / 1676

PRICING

28" STANDARD HEIGHT (C)
276
281

This Upper Rail allows the mounting of tile and vertical system to provide privacy, space division and functionality at various heights in a workstation.

WHAT'S INCLUDED
1 ez upper rail and mounting hardware.

WHAT'S EXCLUDED
EZ Upper A-Frame – Single-Sided or Shared.

JZSUR
EZ Upper Rail for Lift and Drop Tile

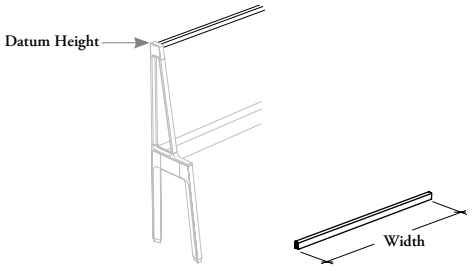

PRODUCT OPTIONS

Width	Datum Height	Frame Finish
48, 54, 60, 66, 72, 78, 84	56, 57, 66	Foundation Mica Accent

SAMPLE ORDER CODE

JZSUR 72	**57**	**68**

DIMENSIONS INCHES / MM

W	H	PRICING
48 / 1219	56 / 1422	161
54 / 1372	56 / 1422	171
60 / 1524	56 / 1422	179
66 / 1676	56 / 1422	187
72 / 1829	56 / 1422	195
78 / 1981	56 / 1422	203
84 / 2134	56 / 1422	211
48 / 1219	57 / 1448	161
54 / 1372	57 / 1448	171
60 / 1524	57 / 1448	179
66 / 1676	57 / 1448	187
72 / 1829	57 / 1448	195
78 / 1981	57 / 1448	203
84 / 2134	57 / 1448	211
48 / 1219	66 / 1676	161
54 / 1372	66 / 1676	171
60 / 1524	66 / 1676	179
66 / 1676	66 / 1676	187
72 / 1829	66 / 1676	195
78 / 1981	66 / 1676	203
84 / 2134	66 / 1676	211

JZSULS

EZ Upper A-Frame for Laminate Shelves – Shared

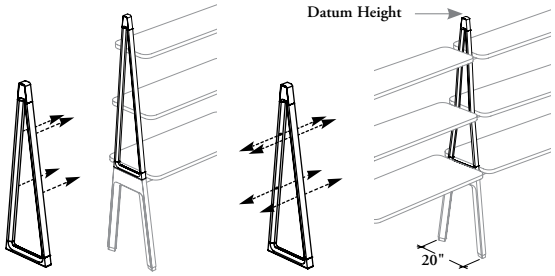

Shelves on One Side (O)

Shelves on Two Sides (T)

This structure allows the use Laminate Shelves (JZTBS) or Planter Box Kit (JZAPU) – EZ Upper A-Frame Mounted to create an open storage space within the workstation or a casual space division between different environments.

WHAT'S INCLUDED
1 ez upper a-frame and mounting hardware.

WHAT'S EXCLUDED
Laminate Shelves or Planter Box Kit – EZ Upper A-Frame Mounted and EZ Fence Legs.

NOTES
Only 20" deep EZ Fence Leg (JZSFS) can be specified under this frame.

PRODUCT OPTIONS

Beam Height	Leg Depth	Datum Height	Configuration	Frame Finish
C Standard Height (28")	20	57, 66	**O** Shelves on One Side	Foundation
			T Shelves on Two Sides	Mica
				Accent

SAMPLE ORDER CODE

JZSULS C	20	66	O	68

DIMENSIONS INCHES / MM

D	H
20 / 508	57 / 1448
20 / 508	66 / 1676

PRICING

28" STANDARD HEIGHT (C)
281
291

JZSCB
Chicago EZ Fence Beam

The Chicago EZ Fence Beam is a key structural element of the product providing horizontal support for Add-On Screens or a Lift and Drop Tile. It also carries electricity and data cabling across fence.

WHAT'S INCLUDED
1 chicago ez fence beam cover (with or without power and data openings, (as specified)), cover mounting clips, facing down brackets, mounting hardware.

WHAT'S EXCLUDED
Power Box, Receptacle Outlet, Voice and Data Faceplates.

NOTES
When Power and Data Opening (NN) is specified, only Opening Position (N) is available.

When Power and Data Opening (DO or DT) is specified, only Opening Position (C, L or R) are available.

When 48" to 60" widths and Power and Data Opening (DO or DT) are specified, only Opening Position (L or R) is available.

When Power and Data Opening (DO or DT,) is specified, a Communication Extender Plate (JNEDE) must be used to install Voice and Data Faceplate.

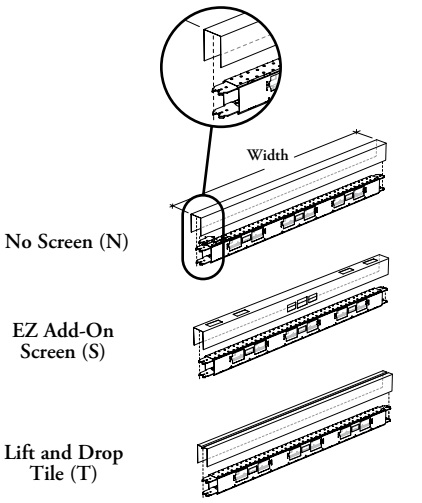

PRODUCT OPTIONS

Configuration	Width	Power and Data Opening	Opening Position	Finish
N No Screen	48, 54, 60, 66, 72, 78, 84	**DO** Power and Data – One Side	**C** Center	Foundation
S EZ Add-On Screen		**DT** Power and Data – Two Sides	**L** Left	Mica
T Lift and Drop Tile		**NN** No Opening	**R** Right	Accent
			N No Opening	

SAMPLE ORDER CODE

JZSCB N	66	DT	C	74

DIMENSIONS
INCHES / MM

PRICING

W	NO SCREEN (N) or EZ ADD-ON SCREEN (S)	LIFT AND DROP TILE (T)
48 / 1219	247	260
54 / 1372	274	287
60 / 1524	300	313
66 / 1676	329	342
72 / 1829	357	370
78 / 1981	364	377
84 / 2134	370	383

JZSCS

Chicago EZ Fence Beam for Corridor

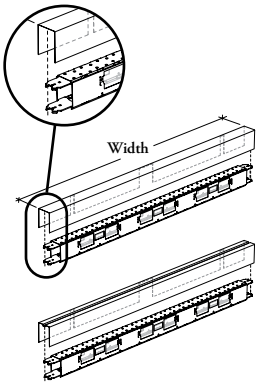

No Screen (N)

Lift and Drop Tile (T)

The Chicago EZ Fence Beam for Corridor is a key structural element of the product providing horizontal support for Floor or Modesty Screen – EZ Fence Beam-Mounted. It also carries electricity and data cabling across workstations.

WHAT'S INCLUDED
1 chicago ez fence beam cover for corridor (with or without power and data openings, (as specified)), cover mounting clips, facing down brackets, mounting hardware.

WHAT'S EXCLUDED
Power Box, Receptacle Outlet, Voice and Data Faceplates.

NOTES
When Power and Data Opening (NN) is specified, only Opening Position (N) is available.

When Power and Data Opening (DO) is specified, only Opening Position (C, L or R) are available.

When 48" to 60" widths and Power and Data Opening (DO) are specified, only Opening Position (L or R) is available.

When Power and Data Opening (DO) is specified, a Communication Extender Plate (JNEDE) must be used to install Voice and Data Faceplate.

PRODUCT OPTIONS

Configuration	Width	Power and Data Opening	Opening Position	Finish
N No Screen	48, 54, 60, 66, 72, 78, 84	**DO** Power and Data – One Side	**C** Center	Foundation
T Lift and Drop Tile		**NN** No Opening	**L** Left	Mica
			R Right	Accent
			N No Opening	

SAMPLE ORDER CODE

JZSCS N	66	DO	C	74

DIMENSIONS INCHES / MM

W
48 / 1219
54 / 1372
60 / 1524
66 / 1676
72 / 1829
78 / 1981
84 / 2134

PRICING

NO SCREEN (N)	LIFT AND DROP TILE (T)
247	260
274	287
300	313
329	342
357	370
364	377
370	383

J Z W R F
Run-Off for EZ Fence

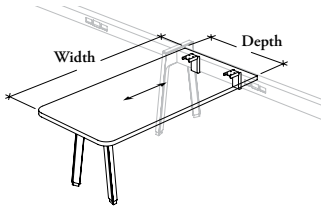

This worksurface provides a fixed primary or secondary surface in multiple applications.

WHAT'S INCLUDED
1 worksurface for ez fence, 1 support, 2 beam-mounted brackets, 2 wire management clips, grommets (if applicable), 1 worksurface reinforcement channel (for 72" to 84" wide worksurface) and cable tray (**not** included with None (NN) option).

WHAT'S EXCLUDED
Square Grommet Cover.

NOTES
When Curved Corner Detail (C) is specified, only the 3 mm Straight Trim (6) is avalaible.

Leg height is 29" from the finished floor to the top of the finished worksurface with a leveling range 3".

PRODUCT OPTIONS

Mounting Option	Corner Detail	Depth	Width	Width Reduction	Lateral Beam Position	Cut-Out Style
U Under Beam-Mounted	**C** Curved (Shown) **S** Standard	23, 29	48, 54, 60, 66, 72, 78, 84	**H** Half-Beam Reduction **F** Full-Beam Reduction	**L** Left **R** Right (Shown)	**CC** Diamond & Square Cut-Outs **DC** Diamond Cut-Out – Center **DO** Diamond Cut-Out – Offset **SC** Square Cut-Out – Center **SO** Square Cut-Out – Offset **NN** None (Shown)

SAMPLE ORDER CODE

JZWRF U	S	23	48	H	L	CC

PRODUCT OPTIONS CONTINUED

Worksurface Finish	User Edge Trim Style	Edge Trim Finish	Leg Finish	Grommet Finish (If Applicable)
Foundation Laminate	**6** 3 mm Straight Trim **8** 1.5 mm Flat Trim	Edge Trim Colors	Foundation Mica Accent	Foundation Mica Accent

SAMPLE ORDER CODE CONTINUED

LW	6	ST	60	60

See Pricing on the following page.

J Z W R F
Run-Off for EZ Fence (Continued)

DIMENSIONS INCHES / MM		PRICING	
D	W	STANDARD (S)	CURVED (C)
23 / 584	48 / 1219	1085	1112
23 / 584	54 / 1372	1114	1144
23 / 584	60 / 1524	1139	1173
23 / 584	66 / 1676	1168	1204
23 / 584	72 / 1829	1248	1285
23 / 584	78 / 1981	1277	1317
23 / 584	84 / 2134	1305	1347
29 / 737	48 / 1219	1155	1186
29 / 737	54 / 1372	1190	1224
29 / 737	60 / 1524	1226	1261
29 / 737	66 / 1676	1260	1297
29 / 737	72 / 1829	1346	1385
29 / 737	78 / 1981	1380	1422
29 / 737	84 / 2134	1414	1458

JZSLC
EZ Fence Leg Cover – Top

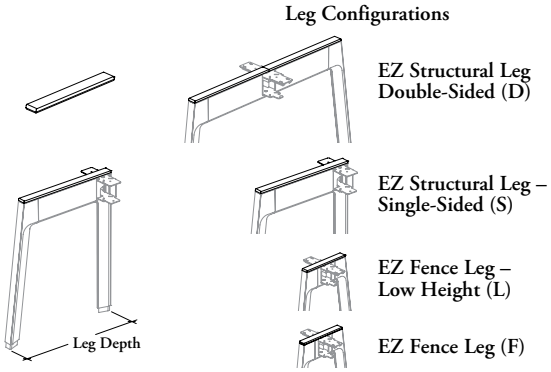

This cover finishes the top of the EZ Fence Legs or EZ Structural Legs in exposed application.

WHAT'S INCLUDED
1 ez fence leg cover (ez fence leg, ez fence leg – low height or ez structural leg – single-sided) or 2 covers (ez structural leg – double-sided) and mounting clips.

WHAT'S EXCLUDED
EZ Fence Legs or EZ Structural Legs.

NOTES
Can be used only with the following supports:

- EZ Fence Leg (JZSFS)
- EZ Fence Leg – Low Height (JZSFL)
- EZ Structural Leg – Single- or Double-Sided (JZSLS or JZSLD)

PRODUCT OPTIONS

Support Style	Leg Configuration	Leg Depth	Finish
A Angled	**D** EZ Structural Leg – Double-Sided	17, 18, 20, 24, 36, 48	Foundation
	F EZ Fence Leg		Mica
	L EZ Fence Leg – Low Height		Accent
	S EZ Structural Leg – Single-Sided		

SAMPLE ORDER CODE

JZSLC A	F	20	74

DIMENSIONS
INCHES / MM

PRICING

LEG CONFIG.	D	
D	36 / 914	74
D	48 / 1219	103
F	20 / 508	24
L	17 / 432	24
S	18 / 457	37
S	24 / 610	52

preconfigured ez fence structure

preconfigured ez fence structure product map

J Z P D EZ Fence for Lift and Drop Tile – Shared

Page 848

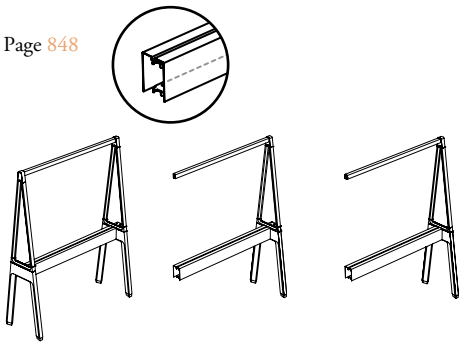

J Z P S EZ Fence for Lift and Drop Tile – Single-Sided

Page 849

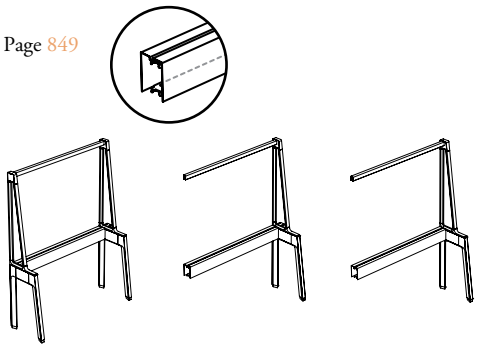

J Z P B EZ Fence for Lift and Drop Tile – Single-Sided for Corridor

Page 850

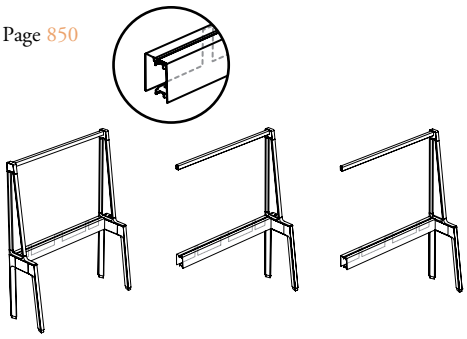

J Z P L D EZ Fence for Lift and Drop Tile – Low Shared

Page 851

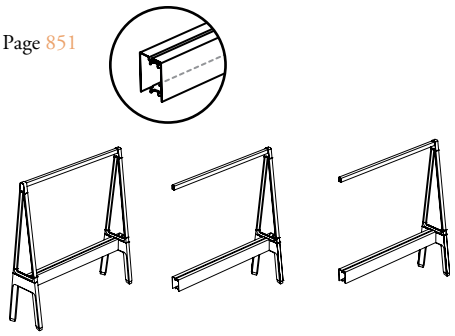

J Z P D

EZ Fence for Lift and Drop Tile – Shared

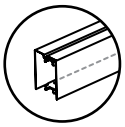

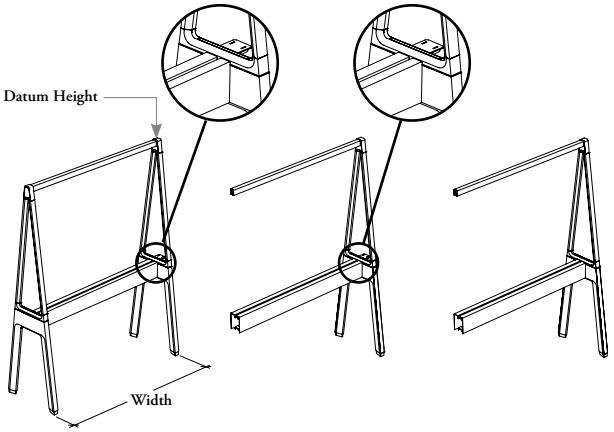

Left – End (L) **In-Line (I)** **Right – End (R)**

The EZ Fence for Lift and Drop Tile – Shared includes all structural components that provide support for all Lift and Drop Tiles and Lift and Drop Vertical Posts It also carries electricity and data cabling across workstations.

WHAT'S INCLUDED

1 or 2 ez shared fence legs (as specified), 1 or 2 shared ez upper a-frame (as specified), 1 ez upper rail for lift and drop tile, 1 ez fence beam cover (with or without power and data openings, (as specified)), cover mounting clips, facing down brackets, mounting hardware.

WHAT'S EXCLUDED

EZ Upper A-Frame for Laminate Shelves, Lift and Drop Tiles, Communication Extender Plate, Power Box, Receptacle Outlet and Harness.

NOTES

When Power and Data Opening (NN) is specified, only Opening Position (N) is available.

When 48" to 60" widths and Power and Data Opening (DT) is specified, Opening Position (L or R) is available.

When Power and Data Opening (DT) is specified, only Opening Position (C, L or R) is available.

PRODUCT OPTIONS

Configuration	Datum Height	Width	Power and Data Opening	Opening Position	Frame Finish
I In-Line	57, 66	48, 54, 60, 66, 72, 78, 84	**DT** Power and Data – Two Sides	**C** Center	Foundation
L Left – End			**NN** No Opening	**L** Left	Mica
R Right– End				**R** Right	Accent
				N No Opening	

SAMPLE ORDER CODE

JZPD L	57	66	NN	N	68

DIMENSIONS INCHES / MM

PRICING

H	W	END – LEFT (L)	IN-LINE (I)	END – RIGHT (R)
57 / 1448	48 / 1219	1966	1212	1175
57 / 1448	54 / 1372	2002	1248	1211
57 / 1448	60 / 1524	2037	1283	1246
57 / 1448	66 / 1676	2074	1320	1283
57 / 1448	72 / 1829	2110	1356	1319
57 / 1448	78 / 1981	2125	1371	1334
57 / 1448	84 / 2134	2139	1385	1348
66 / 1676	48 / 1219	1987	1223	1186
66 / 1676	54 / 1372	2023	1259	1221
66 / 1676	60 / 1524	2058	1293	1256
66 / 1676	66 / 1676	2095	1331	1293
66 / 1676	72 / 1829	2131	1366	1329
66 / 1676	78 / 1981	2146	1382	1344
66 / 1676	84 / 2134	2160	1395	1358

JZPS
EZ Fence for Lift and Drop Tile – Single-Sided

The EZ Fence fot Lift and Drop Tile – Single-Sided includes all structural components that provide support for all Lift and Drop Tiles and Lift and Drop Vertical Posts It also carries electricity and data cabling across workstations.

WHAT'S INCLUDED
1 or 2 ez single-sided structural legs (as specified), 1 or 2 single-sided ez upper a-frame (as specified), 1 ez upper rail for lift and drop tile, 1 ez fence beam cover (with or without power and data openings, (as specified)), cover mounting clips, facing down brackets, mounting hardware.

WHAT'S EXCLUDED
Lift and Drop Tiles, Communication Extender Plate, Power Box, Receptacle Outlet and Harness.

NOTES
When Power and Data Opening (NN) is specified, only Opening Position (N) is available.

When 48" to 60" widths and Power and Data Opening (DO) is specified, only Opening Position (L or R) is available.

When Power and Data Opening (DO) is specified, only Opening Position (C, L or R) is available.

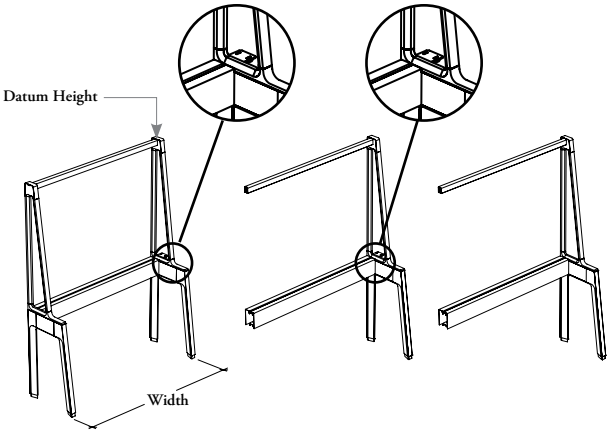

Left – End (L) In-Line (I) Right – End (R)

PRODUCT OPTIONS

Configuration	Datum Height	Width	Power and Data Opening	Opening Position	Frame Finish
I In-Line	57, 66	48, 54, 60, 66, 72, 78, 84	**DO** Power and Data – One Side	**C** Center	Foundation
L Left – End			**NN** No Opening	**L** Left	Mica
R Right– End				**R** Right	Accent
				N No Opening	

SAMPLE ORDER CODE

JZPS I	66	78	NN	N	68

DIMENSIONS INCHES / MM

PRICING

H	W	END – LEFT (L)	IN-LINE (I)	END – RIGHT (R)
57 / 1448	48 / 1219	2090	1282	1230
57 / 1448	54 / 1372	2126	1318	1266
57 / 1448	60 / 1524	2161	1353	1300
57 / 1448	66 / 1676	2198	1390	1337
57 / 1448	72 / 1829	2234	1426	1373
57 / 1448	78 / 1981	2249	1441	1389
57 / 1448	84 / 2134	2263	1455	1402
66 / 1676	48 / 1219	2100	1286	1234
66 / 1676	54 / 1372	2136	1322	1270
66 / 1676	60 / 1524	2170	1357	1305
66 / 1676	66 / 1676	2207	1394	1342
66 / 1676	72 / 1829	2243	1430	1378
66 / 1676	78 / 1981	2259	1445	1393
66 / 1676	84 / 2134	2272	1459	1407

J Z P B

EZ Fence for Lift and Drop Tile – Single-Sided for Corridor

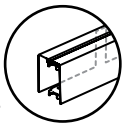

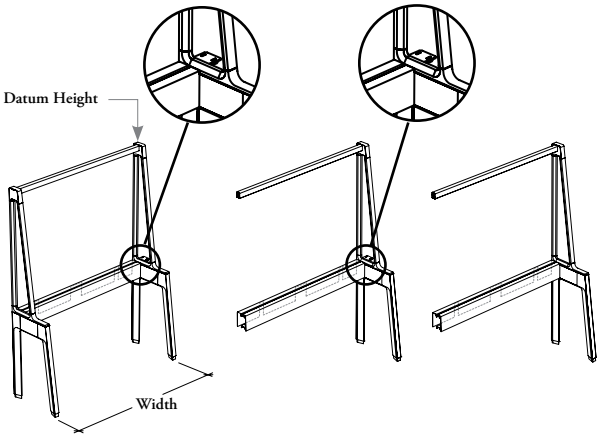

Left – End (L) **In-Line (I)** **Right – End (R)**

The EZ Fence for Lift and Drop Tile – Single-Sided for Corridor includes all structural components that provide support for all Lift and Drop Tiles and Lift and Drop Vertical Posts It also carries electricity and data cabling across workstations.

WHAT'S INCLUDED

1 or 2 ez single-sided structural legs (as specified), 1 or 2 single-sided ez upper a-frame (as specified), 1 ez upper rail for lift and drop tile, 1 ez fence beam cover (with or without power and data openings, (as specified)), cover mounting clips, facing down brackets, mounting hardware.

WHAT'S EXCLUDED

Lift and Drop Tiles, Communication Extender Plate, Power Box, Receptacle Outlet and Harness.

NOTES

EZ Fence Beam Cover exposes the back of the beam to enable Modesty Screen or Floor Screen – EZ Fence Beam-Mounted installation.

When Power and Data Opening (NN) is specified, only Opening Position (N) is available.

When 48" to 60" widths and Power and Data Opening (DO) is specified, only Opening Position (L or R) is available.

When Power and Data Opening (DO) is specified, only Opening Position (C, L or R) is available.

PRODUCT OPTIONS

Configuration	Datum Height	Width	Power and Data Opening	Opening Position	Frame Finish
I In-Line	57, 66	48, 54, 60, 66, 72, 78, 84	**DO** Power and Data – One Side	**C** Center	Foundation
L Left – End			**NN** No Opening	**L** Left	Mica
R Right– End				**R** Right	Accent
				N No Opening	

SAMPLE ORDER CODE

JZPB I	66	78	NN	N	68

DIMENSIONS
INCHES / MM

PRICING

H	W	END – LEFT (L)	IN-LINE (I)	END – RIGHT (R)
57 / 1448	48 / 1219	2090	1282	1230
57 / 1448	54 / 1372	2126	1318	1266
57 / 1448	60 / 1524	2161	1353	1300
57 / 1448	66 / 1676	2198	1390	1337
57 / 1448	72 / 1829	2234	1426	1373
57 / 1448	78 / 1981	2249	1441	1389
57 / 1448	84 / 2134	2263	1455	1402
66 / 1676	48 / 1219	2100	1286	1234
66 / 1676	54 / 1372	2136	1322	1270
66 / 1676	60 / 1524	2170	1357	1305
66 / 1676	66 / 1676	2207	1394	1342
66 / 1676	72 / 1829	2243	1430	1378
66 / 1676	78 / 1981	2259	1445	1393
66 / 1676	84 / 2134	2272	1459	1407

JZPLD
EZ Fence for Lift and Drop Tile – Low Shared

The EZ Fence fot Lift and Drop Tile – Low Shared includes all structural components that provide support for all Lift and Drop Tiles and Lift and Drop Vertical Posts It also carries electricity ans data cabling across workstations.

WHAT'S INCLUDED
1 or 2 low shared ez fence legs (as specified), 1 or 2 shared ez upper a-frame (as specified), 1 ez upper rail for lift and drop tile, 1 ez fence beam cover (with or without power and data openings, (as specified)), cover mounting clips, facing down brackets, mounting hardware.

WHAT'S EXCLUDED
EZ Upper A-Frame for Laminate Shelves, Lift and Drop Tiles, Communication Extender Plate, Power Box, Receptacle Outlet and Harness.

NOTES
When Power and Data Opening (NN) is specified, only Opening Position (N) is available.

When 48" to 60" widths and Power and Data Opening (DT) are specified, only Opening Position (L or R) is available.

When Power and Data Opening (DT) is specified, only Opening Position (C, L or R) is available.

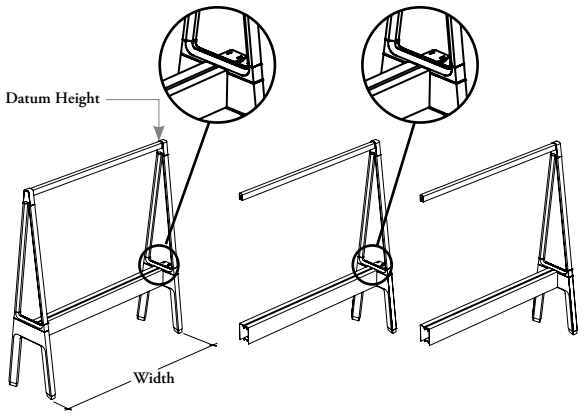

Left – End (L) In-Line (I) Right – End (R)

PRODUCT OPTIONS

Configuration	Datum Height	Width	Power and Data Opening	Opening Position	Frame Finish
I In-Line	56	48, 54, 60, 66, 72, 78, 84	**DT** Power and Data – Two Sides	**C** Center	Foundation
L Left – End			**NN** No Opening	**L** Left	Mica
R Right– End				**R** Right	Accent
				N No Opening	

SAMPLE ORDER CODE

JZPLD I	56	48	NN	N	68

DIMENSIONS INCHES / MM

H	W
56 / 1422	48 / 1219
56 / 1422	54 / 1372
56 / 1422	60 / 1524
56 / 1422	66 / 1676
56 / 1422	72 / 1829
56 / 1422	78 / 1981
56 / 1422	84 / 2134

PRICING

END – LEFT (L)	IN-LINE (I)	END – RIGHT (R)
1858	1155	1124
1894	1191	1160
1929	1226	1195
1966	1263	1232
2002	1299	1268
2017	1314	1283
2031	1328	1297

ez lift & drop tiles & shelves

ez lift & drop tiles and shelves product map

J Z T S H Lift and Drop Tile – Solid

Page 856

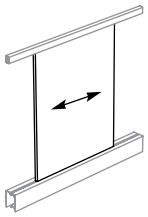

J Z T S V Lift and Drop Tile – Solid Vertical Grain

Page 858

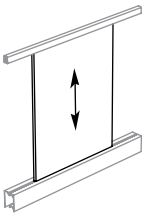

J Z T F Lift and Drop Tile – Fabric

Page 860

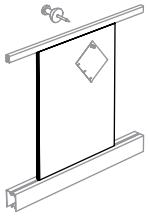

J Z T E L Lift and Drop Tile – Felt

Page 862

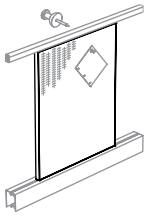

J Z T C Lift and Drop Tile – Cork

Page 864

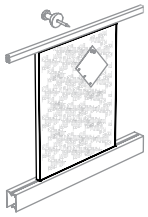

J Z T M A Lift and Drop Tile – Metal Accessory

Page 866

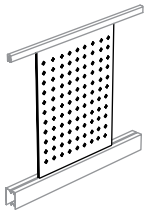

J Z T M W Lift and Drop Tile – Metal Markerboard

Page 867

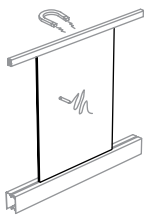

J Z T G G Lift and Drop Tile – Frosted Glass

Page 868

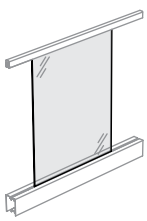

ez lift & drop tiles and shelves product map

J Z T G M Lift and Drop Tile – Writable Magnetic Glass

Page 870

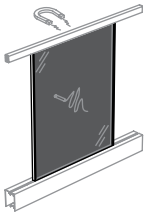

J Z T S M Lift and Drop Media Tile – Solid

Page 871

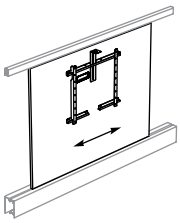

J Z T P S Lift and Drop Vertical Poles

Page 872

J Z T P A Accessories – Lift and Drop Vertical Poles Mounted

Page 873

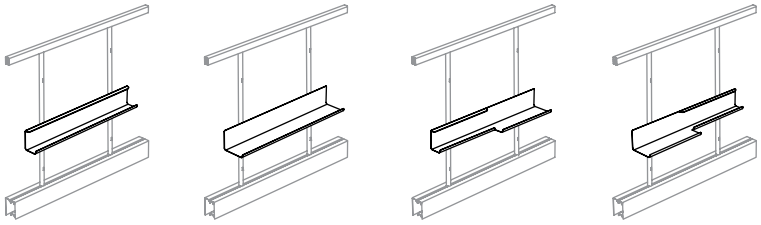

J Z A P U Planter Box Kit – EZ Upper A-Frame Mounted

Page 874

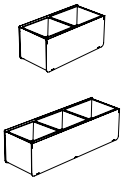

J Z T B S Laminate Shelves – EZ Upper A-Frame Mounted

Page 875

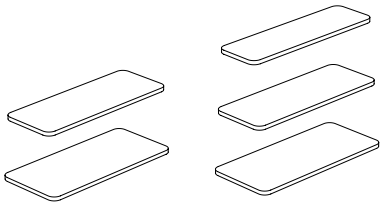

J Z T S H
Lift and Drop Tile – Solid

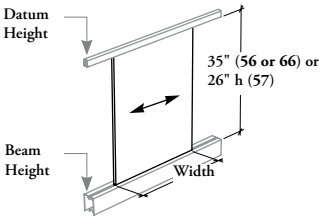

This tile is mounted into EZ Upper Structure provides privacy space division at various heights in a workstation. Easily reconfigurable by a simple lift and drop, it allows flexibility including a variety of look and functionality in planning.

WHAT'S INCLUDED
1 lift and drop tile and 2 anti-dislogement devices.

WHAT'S EXCLUDED
EZ Upper Rail for Lift and Drop Tile.

NOTES
The Hardware Finish can be specified Coordinate Colors to make a better match to the Screen Finish and minimize the visual of the Lift and Drop Extrusion on top of the tile.

The EZ Fence Beam with Lift and Drop (T) configuration is required.

PRODUCT OPTIONS

Beam Height	Datum Height	Width	Screen Finish	Hardware Finish
C Standard Height (28")	**56** (35")	22, 25, 28, 31, 34, 37, 40, 46, 52, 58, 64, 70, 76, 82	Source Laminate	Foundation
L Low Height (18")	**57** (26")			Mica
	66 (35")			Accent
				Coordinate Colors

SAMPLE ORDER CODE

JZTSH C	66	34	3M	85

DIMENSIONS
INCHES / MM

H	W
56 / 1422	22 / 559
56 / 1422	25 / 635
56 / 1422	28 / 711
56 / 1422	31 / 787
56 / 1422	34 / 864
56 / 1422	37 / 940
56 / 1422	40 / 1016
56 / 1422	46 / 1168
56 / 1422	52 / 1321
56 / 1422	58 / 1473
56 / 1422	64 / 1626
56 / 1422	70 / 1778
56 / 1422	76 / 1930
56 / 1422	82 / 2083

PRICING

28" STANDARD HEIGHT (C)	18" LOW HEIGHT (L)
n/a	246
n/a	259
n/a	270
n/a	282
n/a	293
n/a	306
n/a	319
n/a	341
n/a	365
n/a	389
n/a	413
n/a	436
n/a	461
n/a	485

Pricing is continued on the following page.

JZTSH
Lift and Drop Tile – Solid (Continued)

DIMENSIONS INCHES / MM		PRICING	
H	W	28" STANDARD HEIGHT (C)	18" LOW HEIGHT (L)
57 / 1448	22 / 559	226	n/a
57 / 1448	25 / 635	235	n/a
57 / 1448	28 / 711	245	n/a
57 / 1448	31 / 787	254	n/a
57 / 1448	34 / 864	263	n/a
57 / 1448	37 / 940	274	n/a
57 / 1448	40 / 1016	284	n/a
57 / 1448	46 / 1168	302	n/a
57 / 1448	52 / 1321	320	n/a
57 / 1448	58 / 1473	339	n/a
57 / 1448	64 / 1626	358	n/a
57 / 1448	70 / 1778	377	n/a
57 / 1448	76 / 1930	396	n/a
57 / 1448	82 / 2083	414	n/a
66 / 1676	22 / 559	246	n/a
66 / 1676	25 / 635	259	n/a
66 / 1676	28 / 711	270	n/a
66 / 1676	31 / 787	282	n/a
66 / 1676	34 / 864	293	n/a
66 / 1676	37 / 940	306	n/a
66 / 1676	40 / 1016	319	n/a
66 / 1676	46 / 1168	341	n/a
66 / 1676	52 / 1321	365	n/a
66 / 1676	58 / 1473	389	n/a
66 / 1676	64 / 1626	413	n/a
66 / 1676	70 / 1778	436	n/a
66 / 1676	76 / 1930	461	n/a
66 / 1676	82 / 2083	485	n/a

J Z T S V
Lift and Drop Tile – Solid Vertical Grain

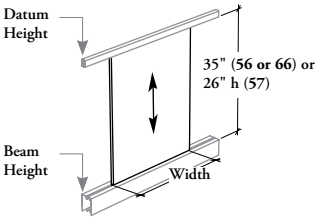

This tile is mounted into EZ Upper Structure provides privacy space division at various heights in a workstation. Easily reconfigurable by a simple lift and drop, it allows flexibility including a variety of look and functionality in planning.

WHAT'S INCLUDED
1 lift and drop tile and 2 anti-dislogement devices.

WHAT'S EXCLUDED
EZ Upper Rail for Lift and Drop Tile.

NOTES
The EZ Fence Beam with Lift and Drop (T) configuration is required.

PRODUCT OPTIONS

Beam Height	Datum Height	Width	Screen Finish	Hardware Finish
C Standard Height (28")	**56** (35")	22, 25, 28, 31, 34, 37, 40, 46, 52, 58	Source Laminate	Foundation
L Low Height (18")	**57** (26")			Mica
	66 (35")			Accent
				Coordinate Colors

SAMPLE ORDER CODE

JZTSV C	66	34	3M	85

DIMENSIONS INCHES / MM

PRICING

H	W	28" STANDARD HEIGHT (C)	18" LOW HEIGHT (L)
56 / 1422	22 / 559	n/a	246
56 / 1422	25 / 635	n/a	259
56 / 1422	28 / 711	n/a	270
56 / 1422	31 / 787	n/a	282
56 / 1422	34 / 864	n/a	293
56 / 1422	37 / 940	n/a	306
56 / 1422	40 / 1016	n/a	319
56 / 1422	46 / 1168	n/a	341
56 / 1422	52 / 1321	n/a	365
56 / 1422	58 / 1473	n/a	389
57 / 1448	22 / 559	226	n/a
57 / 1448	25 / 635	235	n/a
57 / 1448	28 / 711	245	n/a
57 / 1448	31 / 787	254	n/a
57 / 1448	34 / 864	263	n/a
57 / 1448	37 / 940	274	n/a
57 / 1448	40 / 1016	284	n/a
57 / 1448	46 / 1168	302	n/a
57 / 1448	52 / 1321	320	n/a
57 / 1448	58 / 1473	339	n/a

Pricing is continued on the following page.

JZTSV
Lift and Drop Tile – Solid Vertical Grain (Continued)

DIMENSIONS INCHES / MM		PRICING	
H	W	28" STANDARD HEIGHT (C)	18" LOW HEIGHT (L)
66 / 1676	22 / 559	246	n/a
66 / 1676	25 / 635	259	n/a
66 / 1676	28 / 711	270	n/a
66 / 1676	31 / 787	282	n/a
66 / 1676	34 / 864	293	n/a
66 / 1676	37 / 940	306	n/a
66 / 1676	40 / 1016	319	n/a
66 / 1676	46 / 1168	341	n/a
66 / 1676	52 / 1321	365	n/a
66 / 1676	58 / 1473	389	n/a

J Z T F
Lift and Drop Tile – Fabric

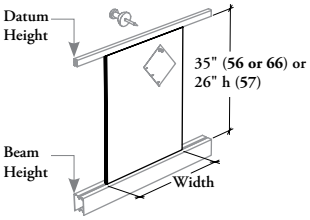

This tile is mounted into EZ Upper Structure provides privacy space division at various heights in a workstation. Easily configurable by a simple lift and drop, it allows flexibility including a variety of look and functionality in planning.

WHAT'S INCLUDED
1 lift and drop tile and 2 anti-dislogement devices.

WHAT'S EXCLUDED
EZ Upper Rail for Lift and Drop Tile.

NOTES
The EZ Fence Beam with Lift and Drop (T) configuration is required.

PRODUCT OPTIONS

Beam Height	Datum Height	Width	Screen Finish	Hardware Finish
C Standard Height (28")	**56** (35")	22, 25, 28, 31, 34, 37, 40, 46, 52, 58, 64, 70, 76, 82	Panel Fabric	Foundation
L Low Height (18")	**57** (26")			Mica
	66 (35")			Accent

SAMPLE ORDER CODE

JZTF C	57	34	M417	85

DIMENSIONS
INCHES / MM

H	W
56 / 1422	22 / 559
56 / 1422	25 / 635
56 / 1422	28 / 711
56 / 1422	31 / 787
56 / 1422	34 / 864
56 / 1422	37 / 940
56 / 1422	40 / 1016
56 / 1422	46 / 1168
56 / 1422	52 / 1321
56 / 1422	58 / 1473
56 / 1422	64 / 1626
56 / 1422	70 / 1778
56 / 1422	76 / 1930
56 / 1422	82 / 2083

PRICING

28" STANDARD HEIGHT (C)							
Gr. A/ COM	Gr. 1	Gr. 2	Gr. 3	Gr. 4	Gr. 5	Gr. 6	Gr. 7
n/a	n/a	n/a	n/a	n/a	n/a	n/a	n/a
n/a	n/a	n/a	n/a	n/a	n/a	n/a	n/a
n/a	n/a	n/a	n/a	n/a	n/a	n/a	n/a
n/a	n/a	n/a	n/a	n/a	n/a	n/a	n/a
n/a	n/a	n/a	n/a	n/a	n/a	n/a	n/a
n/a	n/a	n/a	n/a	n/a	n/a	n/a	n/a
n/a	n/a	n/a	n/a	n/a	n/a	n/a	n/a
n/a	n/a	n/a	n/a	n/a	n/a	n/a	n/a
n/a	n/a	n/a	n/a	n/a	n/a	n/a	n/a
n/a	n/a	n/a	n/a	n/a	n/a	n/a	n/a
n/a	n/a	n/a	n/a	n/a	n/a	n/a	n/a
n/a	n/a	n/a	n/a	n/a	n/a	n/a	n/a
n/a	n/a	n/a	n/a	n/a	n/a	n/a	n/a
n/a	n/a	n/a	n/a	n/a	n/a	n/a	n/a

18" LOW HEIGHT (L)							
Gr. A/ COM	Gr. 1	Gr. 2	Gr. 3	Gr. 4	Gr. 5	Gr. 6	Gr. 7
196	211	229	251	271	293	314	335
231	249	268	292	317	341	364	387
240	260	282	309	334	361	386	413
259	280	303	332	361	390	418	447
270	292	319	350	382	413	443	474
280	304	332	365	399	434	466	499
305	332	361	398	434	471	506	542
324	354	387	429	470	512	552	592
419	452	491	537	583	630	674	719
437	474	516	568	619	670	720	770
506	546	593	648	705	761	815	871
524	568	619	680	741	803	862	921
543	592	645	711	777	843	908	972
561	614	672	742	813	885	954	1023

Pricing is continued on the following page.

J Z T F
Lift and Drop Tile – Fabric (Continued)

DIMENSIONS INCHES / MM

PRICING

		28" STANDARD HEIGHT (C)								18" LOW HEIGHT (L)							
H	W	Gr. A/ COM	Gr. 1	Gr. 2	Gr. 3	Gr. 4	Gr. 5	Gr. 6	Gr. 7	Gr. A/ COM	Gr. 1	Gr. 2	Gr. 3	Gr. 4	Gr. 5	Gr. 6	Gr. 7
57 / 1448	22 / 559	180	196	213	234	256	277	298	320	n/a	n/a	n/a	n/a	n/a	n/a	n/a	n/a
57 / 1448	25 / 635	213	232	251	275	299	324	347	370	n/a	n/a	n/a	n/a	n/a	n/a	n/a	n/a
57 / 1448	28 / 711	223	242	264	291	317	343	369	396	n/a	n/a	n/a	n/a	n/a	n/a	n/a	n/a
57 / 1448	31 / 787	241	262	285	314	343	372	400	429	n/a	n/a	n/a	n/a	n/a	n/a	n/a	n/a
57 / 1448	34 / 864	251	273	298	331	362	393	423	454	n/a	n/a	n/a	n/a	n/a	n/a	n/a	n/a
57 / 1448	37 / 940	260	284	312	346	379	413	447	479	n/a	n/a	n/a	n/a	n/a	n/a	n/a	n/a
57 / 1448	40 / 1016	285	312	341	378	414	451	486	522	n/a	n/a	n/a	n/a	n/a	n/a	n/a	n/a
57 / 1448	46 / 1168	304	334	368	409	450	492	532	572	n/a	n/a	n/a	n/a	n/a	n/a	n/a	n/a
57 / 1448	52 / 1321	401	435	473	520	566	612	657	702	n/a	n/a	n/a	n/a	n/a	n/a	n/a	n/a
57 / 1448	58 / 1473	420	457	499	551	602	653	703	753	n/a	n/a	n/a	n/a	n/a	n/a	n/a	n/a
57 / 1448	64 / 1626	488	529	575	631	688	744	798	854	n/a	n/a	n/a	n/a	n/a	n/a	n/a	n/a
57 / 1448	70 / 1778	507	551	602	662	724	785	844	904	n/a	n/a	n/a	n/a	n/a	n/a	n/a	n/a
57 / 1448	76 / 1930	525	574	628	694	760	826	891	955	n/a	n/a	n/a	n/a	n/a	n/a	n/a	n/a
57 / 1448	82 / 2083	544	596	654	725	796	868	936	1006	n/a	n/a	n/a	n/a	n/a	n/a	n/a	n/a
66 / 1676	22 / 559	196	211	229	251	271	293	314	335	n/a	n/a	n/a	n/a	n/a	n/a	n/a	n/a
66 / 1676	25 / 635	231	249	268	292	317	341	364	387	n/a	n/a	n/a	n/a	n/a	n/a	n/a	n/a
66 / 1676	28 / 711	240	260	282	309	334	361	386	413	n/a	n/a	n/a	n/a	n/a	n/a	n/a	n/a
66 / 1676	31 / 787	259	280	303	332	361	390	418	447	n/a	n/a	n/a	n/a	n/a	n/a	n/a	n/a
66 / 1676	34 / 864	270	292	319	350	382	413	443	474	n/a	n/a	n/a	n/a	n/a	n/a	n/a	n/a
66 / 1676	37 / 940	280	304	332	365	399	434	466	499	n/a	n/a	n/a	n/a	n/a	n/a	n/a	n/a
66 / 1676	40 / 1016	305	332	361	398	434	471	506	542	n/a	n/a	n/a	n/a	n/a	n/a	n/a	n/a
66 / 1676	46 / 1168	324	354	387	429	470	512	552	592	n/a	n/a	n/a	n/a	n/a	n/a	n/a	n/a
66 / 1676	52 / 1321	419	452	491	537	583	630	674	719	n/a	n/a	n/a	n/a	n/a	n/a	n/a	n/a
66 / 1676	58 / 1473	437	474	516	568	619	670	720	770	n/a	n/a	n/a	n/a	n/a	n/a	n/a	n/a
66 / 1676	64 / 1626	506	546	593	648	705	761	815	871	n/a	n/a	n/a	n/a	n/a	n/a	n/a	n/a
66 / 1676	70 / 1778	524	568	619	680	741	803	862	921	n/a	n/a	n/a	n/a	n/a	n/a	n/a	n/a
66 / 1676	76 / 1930	543	592	645	711	777	843	908	972	n/a	n/a	n/a	n/a	n/a	n/a	n/a	n/a
66 / 1676	82 / 2083	561	614	672	742	813	885	954	1023	n/a	n/a	n/a	n/a	n/a	n/a	n/a	n/a

J Z T E L
Lift and Drop Tile – Felt

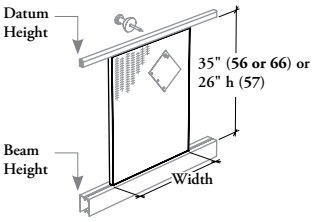

This tile is mounted into EZ Upper Structure provides privacy space division at various heights in a workstation. Easily reconfigurable by a simple lift and drop, it allows flexibility including a variety of look and functionality in planning.

WHAT'S INCLUDED
1 lift and drop tile and 2 anti-dislogement devices.

WHAT'S EXCLUDED
EZ Upper Rail for Lift and Drop Tile.

NOTES
The EZ Fence Beam with Lift and Drop (T) configuration is required.

PRODUCT OPTIONS

Beam Height	Datum Height	Width	Felt Finish	Hardware Finish
C Standard Height (28")	**56** (35")	22, 25, 28, 31, 34, 37, 40, 46, 52, 58, 64, 70, 76, 82	Loft	Foundation
L Low Height (18")	**57** (26")			Mica
	66 (35")			Accent

SAMPLE ORDER CODE

JZTEL L	56	34	RB14	85

DIMENSIONS
INCHES / MM

H	W
56 / 1422	22 / 559
56 / 1422	25 / 635
56 / 1422	28 / 711
56 / 1422	31 / 787
56 / 1422	34 / 864
56 / 1422	37 / 940
56 / 1422	40 / 1016
56 / 1422	46 / 1168
56 / 1422	52 / 1321
56 / 1422	58 / 1473
56 / 1422	64 / 1626
56 / 1422	70 / 1778
56 / 1422	76 / 1930
56 / 1422	82 / 2083

PRICING

28" STANDARD HEIGHT (C)	18" LOW HEIGHT (L)
n/a	588
n/a	641
n/a	695
n/a	748
n/a	802
n/a	855
n/a	908
n/a	1014
n/a	1121
n/a	1227
n/a	1334
n/a	1441
n/a	1547
n/a	1650

Pricing is continued on the following page.

JZTEL
Lift and Drop Tile – Felt (Continued)

DIMENSIONS INCHES / MM		PRICING	
H	W	28" STANDARD HEIGHT (C)	18" LOW HEIGHT (L)
57 / 1448	22 / 559	523	n/a
57 / 1448	25 / 635	590	n/a
57 / 1448	28 / 711	658	n/a
57 / 1448	31 / 787	725	n/a
57 / 1448	34 / 864	792	n/a
57 / 1448	37 / 940	860	n/a
57 / 1448	40 / 1016	927	n/a
57 / 1448	46 / 1168	1053	n/a
57 / 1448	52 / 1321	1131	n/a
57 / 1448	58 / 1473	1209	n/a
57 / 1448	64 / 1626	1286	n/a
57 / 1448	70 / 1778	1364	n/a
57 / 1448	76 / 1930	1442	n/a
57 / 1448	82 / 2083	1518	n/a
66 / 1676	22 / 559	588	n/a
66 / 1676	25 / 635	641	n/a
66 / 1676	28 / 711	695	n/a
66 / 1676	31 / 787	748	n/a
66 / 1676	34 / 864	802	n/a
66 / 1676	37 / 940	855	n/a
66 / 1676	40 / 1016	908	n/a
66 / 1676	46 / 1168	1014	n/a
66 / 1676	52 / 1321	1121	n/a
66 / 1676	58 / 1473	1227	n/a
66 / 1676	64 / 1626	1334	n/a
66 / 1676	70 / 1778	1441	n/a
66 / 1676	76 / 1930	1547	n/a
66 / 1676	82 / 2083	1650	n/a

J Z T C
Lift and Drop Tile – Cork

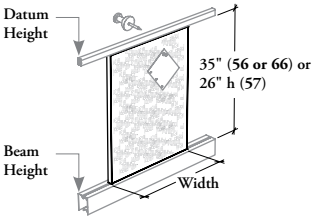

This tile is mounted into EZ Upper Structure provides privacy space division at various heights in a workstation. Easily reconfigurable by a simple lift and drop, it allows flexibility including a variety of look and functionality in planning.

WHAT'S INCLUDED
1 lift and drop tile and 2 anti-dislogement devices.

WHAT'S EXCLUDED
EZ Upper Rail for Lift and Drop Tile.

NOTES
The EZ Fence Beam with Lift and Drop (T) configuration is required.

Cork is a natural material made from flakes and can present some texture irregularity and apertures. Cork have antimicrobial properties that prevent growing of microorganism and hypoallergenic properties. Cork is sensitive to ultraviolet and can present decoloration of material during time.

PRODUCT OPTIONS

Beam Height	Datum Height	Width	Cork Finish	Frame Finish
C Standard Height (28")	**56** (35")	22, 25, 28, 31, 34, 37, 40, 46, 52, 58, 64, 70, 76, 82	Natural Cork	Foundation
L Low Height (18")	**57** (26")			Mica
	66 (35")			Accent

SAMPLE ORDER CODE

JZTC C	66	34	GL	68

DIMENSIONS INCHES / MM

H	W
56 / 1422	22 / 559
56 / 1422	25 / 635
56 / 1422	28 / 711
56 / 1422	31 / 787
56 / 1422	34 / 864
56 / 1422	37 / 940
56 / 1422	40 / 1016
56 / 1422	46 / 1168
56 / 1422	52 / 1321
56 / 1422	58 / 1473
56 / 1422	64 / 1626
56 / 1422	70 / 1778
56 / 1422	76 / 1930
56 / 1422	82 / 2083

PRICING

28" STANDARD HEIGHT (C)	18" LOW HEIGHT (L)
n/a	827
n/a	904
n/a	980
n/a	1057
n/a	1133
n/a	1210
n/a	1286
n/a	1437
n/a	1576
n/a	1716
n/a	1855
n/a	1994
n/a	2133
n/a	2269

Pricing is continued on the following page.

J Z T C
Lift and Drop Tile – Cork (Continued)

DIMENSIONS INCHES / MM		PRICING	
H	W	28" STANDARD HEIGHT (C)	18" LOW HEIGHT (L)
57 / 1448	22 / 559	719	n/a
57 / 1448	25 / 635	785	n/a
57 / 1448	28 / 711	851	n/a
57 / 1448	31 / 787	918	n/a
57 / 1448	34 / 864	984	n/a
57 / 1448	37 / 940	1050	n/a
57 / 1448	40 / 1016	1116	n/a
57 / 1448	46 / 1168	1242	n/a
57 / 1448	52 / 1321	1360	n/a
57 / 1448	58 / 1473	1477	n/a
57 / 1448	64 / 1626	1594	n/a
57 / 1448	70 / 1778	1711	n/a
57 / 1448	76 / 1930	1828	n/a
57 / 1448	82 / 2083	1943	n/a
66 / 1676	22 / 559	827	n/a
66 / 1676	25 / 635	904	n/a
66 / 1676	28 / 711	980	n/a
66 / 1676	31 / 787	1057	n/a
66 / 1676	34 / 864	1133	n/a
66 / 1676	37 / 940	1210	n/a
66 / 1676	40 / 1016	1286	n/a
66 / 1676	46 / 1168	1437	n/a
66 / 1676	52 / 1321	1576	n/a
66 / 1676	58 / 1473	1716	n/a
66 / 1676	64 / 1626	1855	n/a
66 / 1676	70 / 1778	1994	n/a
66 / 1676	76 / 1930	2133	n/a
66 / 1676	82 / 2083	2269	n/a

J Z T M A

Lift and Drop Tile – Metal Accessory

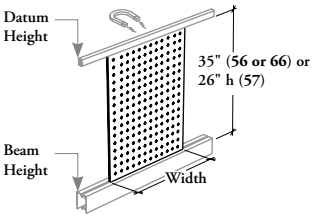

This tile is mounted into EZ Upper Structure provides privacy space division at various heights in a workstation. This screen construction gives an architectural screen look with patterns and allows a playfull visual with infinite color possibilities. It also allows mounting of Metal Screen Accessories in a infinite and reconfigurable positions and also provides magnetic surface on both sides. Easily reconfigurable by a simple lift and drop, it allows flexibility including a variety of look and functionality in planning.

WHAT'S INCLUDED
1 lift and drop tile and 2 anti-dislogement devices.

WHAT'S EXCLUDED
EZ Upper Rail for Lift and Drop Tile, Metal Screen Accessories and Rare Earth Magnets Kit.

NOTES
The EZ Fence Beam with Lift and Drop (T) configuration is required.

PRODUCT OPTIONS

Beam Height	Datum Height	Width	Pattern	Outer Metal Finish	Inset Metal Finish
C Standard Height (28")	**56** (35")	28, 34, 40	**P** Plus	Foundation	Foundation
L Low Height (18")	**57** (26")		**S** Square	Mica	Mica
	66 (35")			Accent	Accent

SAMPLE ORDER CODE

JZTMA C	66	34	S	68	68

DIMENSIONS INCHES / MM

PRICING

H	W	28" STANDARD HEIGHT (C)	18" LOW HEIGHT (L)
56 / 1422	28 / 711	n/a	971
56 / 1422	34 / 864	n/a	1024
56 / 1422	40 / 1016	n/a	1076
57 / 1448	28 / 711	909	n/a
57 / 1448	34 / 864	951	n/a
57 / 1448	40 / 1016	992	n/a
66 / 1676	28 / 711	971	n/a
66 / 1676	34 / 864	1024	n/a
66 / 1676	40 / 1016	1076	n/a

JZTMW
Lift and Drop Tile – Metal Markerboard

This tile is mounted into EZ Upper Structure provides privacy space division at various heights in a workstation. It also provides a writable and magnetic surface to communicate information on both sides. Easily configurable by a simple lift and drop, it allows flexibility including a variety of look and functionality in planning.

WHAT'S INCLUDED
1 lift and drop tile, 2 anti-dislogement devices and 8 rare earth magnets.

WHAT'S EXCLUDED
EZ Upper Rail for Lift and Drop Tile, Markerboard Tray and Dry-Erase Kit

NOTES
The EZ Fence Beam with Lift and Drop (T) configuration is required.

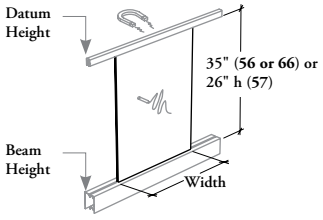

PRODUCT OPTIONS

Beam Height	Datum Height	Width	Screen Finish
C Standard Height (28")	**56** (35")	28, 34	**WZ** Whiteboard
L Low Height (18")	**57** (26")		
	66 (35")		

SAMPLE ORDER CODE

JZTMW C	57	34	WZ

DIMENSIONS INCHES / MM

PRICING

H	W	28" STANDARD HEIGHT (C)	18" LOW HEIGHT (L)
56 / 1422	28 / 711	n/a	995
56 / 1422	34 / 864	n/a	1029
57 / 1448	28 / 711	804	n/a
57 / 1448	34 / 864	995	n/a
66 / 1676	28 / 711	883	n/a
66 / 1676	34 / 864	1029	n/a

J Z T G G

Lift and Drop Tile – Frosted Glass

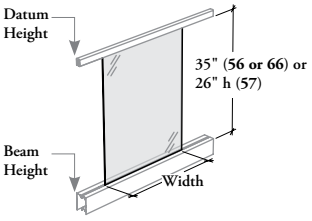

This tile is mounted into EZ Upper Structure provides privacy space division at various heights in a workstation. Easily configurable by a simple lift and drop, it allows flexibility including a variety of look and functionality in planning.

WHAT'S INCLUDED
1 lift and drop tile and 2 anti-dislogement devices.

WHAT'S EXCLUDED
EZ Upper Rail for Lift and Drop Tile.

NOTES
The EZ Fence Beam with Lift and Drop (T) configuration is required.

PRODUCT OPTIONS

Beam Height	Datum Height	Width	Glass Finish
C Standard Height (28")	**56** (35")	22, 25, 28, 31, 34, 37, 40, 46, 52, 58, 64, 70, 76, 82	**Standard Glass:**
L Low Height (18")	**57** (26")		**FT** Frost
	66 (35")		**FB** Satin
			Low Iron Glass:
			LB Frost – Low Iron Glass

SAMPLE ORDER CODE

JZTGG C	66	34	FT

DIMENSIONS INCHES / MM

PRICING

		28" STANDARD HEIGHT (C)			18" LOW HEIGHT (L)		
H	W	Frost (FT)	Satin (FB)	Frost – Low Iron (LB)	Frost (FT)	Satin (FB)	Frost – Low Iron (LB)
56 / 1422	22 / 559	n/a	n/a	n/a	263	386	369
56 / 1422	25 / 635	n/a	n/a	n/a	297	433	407
56 / 1422	28 / 711	n/a	n/a	n/a	331	478	444
56 / 1422	31 / 787	n/a	n/a	n/a	364	524	483
56 / 1422	34 / 864	n/a	n/a	n/a	397	570	520
56 / 1422	37 / 940	n/a	n/a	n/a	430	616	558
56 / 1422	40 / 1016	n/a	n/a	n/a	464	662	596
56 / 1422	46 / 1168	n/a	n/a	n/a	529	753	669
56 / 1422	52 / 1321	n/a	n/a	n/a	596	846	745
56 / 1422	58 / 1473	n/a	n/a	n/a	662	937	819
56 / 1422	64 / 1626	n/a	n/a	n/a	728	1029	894
56 / 1422	70 / 1778	n/a	n/a	n/a	795	1121	970
56 / 1422	76 / 1930	n/a	n/a	n/a	862	1212	1045
56 / 1422	82 / 2083	n/a	n/a	n/a	928	1304	1119

Pricing is continued on the following page.

JZTGG
Lift and Drop Tile – Frosted Glass (Continued)

DIMENSIONS INCHES / MM

PRICING

H	W	28" STANDARD HEIGHT (C)			18" LOW HEIGHT (L)		
		Frost (FT)	Satin (FB)	Frost – Low Iron (LB)	Frost (FT)	Satin (FB)	Frost – Low Iron (LB)
57 / 1448	22 / 559	220	317	318	n/a	n/a	n/a
57 / 1448	25 / 635	248	355	349	n/a	n/a	n/a
57 / 1448	28 / 711	276	393	380	n/a	n/a	n/a
57 / 1448	31 / 787	304	432	412	n/a	n/a	n/a
57 / 1448	34 / 864	332	470	443	n/a	n/a	n/a
57 / 1448	37 / 940	360	508	474	n/a	n/a	n/a
57 / 1448	40 / 1016	387	546	506	n/a	n/a	n/a
57 / 1448	46 / 1168	443	622	567	n/a	n/a	n/a
57 / 1448	52 / 1321	500	698	630	n/a	n/a	n/a
57 / 1448	58 / 1473	556	775	693	n/a	n/a	n/a
57 / 1448	64 / 1626	611	851	755	n/a	n/a	n/a
57 / 1448	70 / 1778	667	927	817	n/a	n/a	n/a
57 / 1448	76 / 1930	723	1003	879	n/a	n/a	n/a
57 / 1448	82 / 2083	778	1079	942	n/a	n/a	n/a
66 / 1676	22 / 559	263	386	369	n/a	n/a	n/a
66 / 1676	25 / 635	297	433	407	n/a	n/a	n/a
66 / 1676	28 / 711	331	478	444	n/a	n/a	n/a
66 / 1676	31 / 787	364	524	483	n/a	n/a	n/a
66 / 1676	34 / 864	397	570	520	n/a	n/a	n/a
66 / 1676	37 / 940	430	616	558	n/a	n/a	n/a
66 / 1676	40 / 1016	464	662	596	n/a	n/a	n/a
66 / 1676	46 / 1168	529	753	669	n/a	n/a	n/a
66 / 1676	52 / 1321	596	846	745	n/a	n/a	n/a
66 / 1676	58 / 1473	662	937	819	n/a	n/a	n/a
66 / 1676	64 / 1626	728	1029	894	n/a	n/a	n/a
66 / 1676	70 / 1778	795	1121	970	n/a	n/a	n/a
66 / 1676	76 / 1930	862	1212	1045	n/a	n/a	n/a
66 / 1676	82 / 2083	928	1304	1119	n/a	n/a	n/a

J Z T G M

Lift and Drop Tile – Writable Magnetic Glass

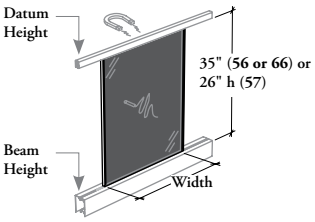

This tile is mounted into EZ Upper Structure provides privacy space division at various heights in a workstation. It also provides a writable and magnetic surface to communicate information on both sides. Easily configurable by a simple lift and drop, it allows flexibility including a variety of look and functionality in planning.

WHAT'S INCLUDED
1 lift and drop tile, 2 anti-dislogement devices and 8 rare earth magnets.

WHAT'S EXCLUDED
EZ Upper Rail for Lift and Drop Tile, Markerboard Tray and Dry-Erase Kit

NOTES
The EZ Fence Beam with Lift and Drop (T) configuration is required.

PRODUCT OPTIONS

Beam Height	Datum Height	Width	Glass Finish
C Standard Height (28")	**56** (35")	22, 25, 28, 31, 34, 37, 40, 46	Back-Painted
L Low Height (18")	**57** (26")		
	66 (35")		

SAMPLE ORDER CODE

JZTGM C	66	34	B8

DIMENSIONS INCHES / MM

PRICING

H	W	28" STANDARD HEIGHT (C)	18" LOW HEIGHT (L)
56 / 1422	22 / 559	n/a	1013
56 / 1422	25 / 635	n/a	1121
56 / 1422	28 / 711	n/a	1228
56 / 1422	31 / 787	n/a	1336
56 / 1422	34 / 864	n/a	1444
56 / 1422	37 / 940	n/a	1552
56 / 1422	40 / 1016	n/a	1660
56 / 1422	46 / 1168	n/a	1869
57 / 1448	22 / 559	807	n/a
57 / 1448	25 / 635	890	n/a
57 / 1448	28 / 711	972	n/a
57 / 1448	31 / 787	1054	n/a
57 / 1448	34 / 864	1137	n/a
57 / 1448	37 / 940	1219	n/a
57 / 1448	40 / 1016	1302	n/a
57 / 1448	46 / 1168	1464	n/a
66 / 1676	22 / 559	1013	n/a
66 / 1676	25 / 635	1121	n/a
66 / 1676	28 / 711	1228	n/a
66 / 1676	31 / 787	1336	n/a
66 / 1676	34 / 864	1444	n/a
66 / 1676	37 / 940	1552	n/a
66 / 1676	40 / 1016	1660	n/a
66 / 1676	46 / 1168	1869	n/a

JZTSM
Lift and Drop Media Tile – Solid

This tile is mounted into EZ Upper Structure provides privacy space division for a projection. It allows the mounting of a monitor and cable managements to create a perfect minimalist media center. Easily reconfigurable by a simple lift and drop. It also allows flexibility including a variety of look and functionality in planning. Perfect for active collaborative environments.

WHAT'S INCLUDED
1 lift and drop media tile, 2 anti-dislogement devices, monitor stand, pass-through ring or front vertical manager (as specified).

WHAT'S EXCLUDED
EZ Upper Rail for Lift and Drop Tile and EZ Suspended Credenza – Media Center – Single-Sided.

NOTES
The Screen Hardware Finish can be specified Coordinate Colors to make a better match to the Screen Finish and minimize the visual of the Lift and Drop Extrusion on top of the tile.

The EZ Fence Beam with Lift and Drop (T) configuration is required.

When Pass-Through (P) option is specified, the Vertical Manager Finish is **not** available.

The Pass-Trough ring is finished in Platinum.

Monitor Stand is finished in Black.

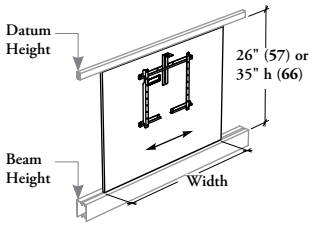

PRODUCT OPTIONS

Beam Height	Datum Height	Width	Cable Management	Screen Finish	Screen Hardware Finish	Vertical Manager Finish
C Standard Height (28")	**57** (26") **66** (35")	46, 52, 58, 64, 70, 76, 82	**F** Front Vertical Manager **P** Pass-Through (Shown)	Source Laminate	Foundation Accent Mica Coordinate Colors	Foundation Accent Mica

SAMPLE ORDER CODE

JZTSM C	57	46	F	3M	85	85

DIMENSIONS INCHES / MM

H	W
57 / 1448	46 / 1168
57 / 1448	52 / 1321
57 / 1448	58 / 1473
57 / 1448	64 / 1626
57 / 1448	70 / 1778
57 / 1448	76 / 1930
57 / 1448	82 / 2083
66 / 1676	46 / 1168
66 / 1676	52 / 1321
66 / 1676	58 / 1473
66 / 1676	64 / 1626
66 / 1676	70 / 1778
66 / 1676	76 / 1930
66 / 1676	82 / 2083

PRICING

28" STANDARD HEIGHT (C)
745
763
782
802
820
839
857
784
809
832
856
879
904
928

J Z T P S
Lift and Drop Vertical Poles

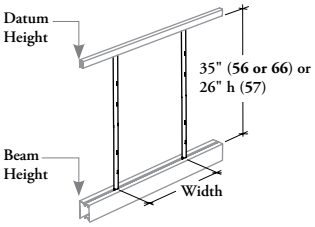

These poles is mounted into EZ Upper Structure is the base of the vertical system that provides privacy space division. It allows the mounting of differents style of accessories that can be placed at desired position. This system allows flexibility including a variety of look and functionality in planning.

WHAT'S INCLUDED
2 left and drop vertical poles and 2 anti-sliding devices.

WHAT'S EXCLUDED
EZ Upper Rail for Lift and Drop Tile and Accessories – Lift and Drop Vertical Poles Mounted.

NOTES
The EZ Fence Beam with Lift and Drop (T) configuration is required.

PRODUCT OPTIONS

Beam Height	Datum Height	Width	Accessories Configuration	Pole Finish
C Standard Height (28")	**56** (35")	24, 30, 36, 42	**2** Two-Accessories Height	Foundation
L Low Height (18")	**57** (26")		**3** Three-Accessories Height	Accent
	66 (35")			Mica

SAMPLE ORDER CODE

JZTPS C	57	24	2	68

DIMENSIONS INCHES / MM

PRICING

		28" STANDARD HEIGHT (C)		18" LOW HEIGHT (L)	
		TWO-ACCESSORIES HEIGHT (2)	THREE-ACCESSORIES HEIGHT (3)	TWO-ACCESSORIES HEIGHT (2)	THREE-ACCESSORIES HEIGHT (3)
H	W				
56 / 1422	24 /610	n/a	n/a	118	118
56 / 1422	30 / 762	n/a	n/a	118	118
56 / 1422	36 / 914	n/a	n/a	118	118
56 / 1422	42 / 1067	n/a	n/a	118	118
57 / 1448	24 /610	101	n/a	n/a	n/a
57 / 1448	30 / 762	101	n/a	n/a	n/a
57 / 1448	36 / 914	101	n/a	n/a	n/a
57 / 1448	42 / 1067	101	n/a	n/a	n/a
66 / 1676	24 /610	118	118	n/a	n/a
66 / 1676	30 / 762	118	118	n/a	n/a
66 / 1676	36 / 914	118	118	n/a	n/a
66 / 1676	42 / 1067	118	118	n/a	n/a

JZTPA
Accessories – Lift and Drop Vertical Pole Mounted

These accessories is mounted into EZ Upper Structure provides a casual privacy and space division in a floating look. They are offered in many configurations as book holder, shelf or planter. They can be mounted at the desired position and allows flexibility including a variety of visual and functionality in planning.

WHAT'S INCLUDED
1 accessories for lift and drop vertical poles (as specified).

WHAT'S EXCLUDED
Lift and Drop Vertical Poles.

NOTES
Planter Box includes Planter Liners finished in Black only.

Shelf/Book Display – Left (L)

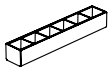
Planter Box (P)

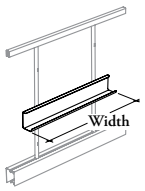

Book Display (B)

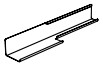
Book Display/ Shelf – Right (R)

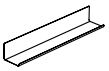
6" Shelf (S)

PRODUCT OPTIONS

Width	Accessory Configuration	Accessory Finish
24, 30, 36, 42	**B** Book Display	Foundation
	L Shelf/Book Display – Left	Accent
	P Planter Box	Mica
	R Book Display/Shelf – Right	
	S 6" Shelf	

SAMPLE ORDER CODE

JZTPA 24	P	68

DIMENSIONS INCHES / MM		PRICING
ACC. CONFIG.	W	
B	24 /610	115
B	30 / 762	122
B	36 / 914	129
B	42 / 1067	135
L	24 /610	122
L	30 / 762	130
L	36 / 914	138
L	42 / 1067	144
P	24 /610	209
P	30 / 762	220
P	36 / 914	232
P	42 / 1067	267
R	24 /610	122
R	30 / 762	130
R	36 / 914	138
R	42 / 1067	144
S	24 /610	122
S	30 / 762	130
S	36 / 914	138
S	42 / 1067	144

J Z A P U

Planter Box Kit – EZ Upper A-Frame Mounted

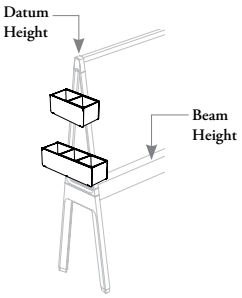

Planter Box Kit allows integration of biophilia at the end of the EZ Fence Structure.

WHAT'S INCLUDED
1 12" wide planter box, 1 18" wide planter box with mounting brackets and 5 planter liners.

WHAT'S EXCLUDED
EZ Upper A-Frame – Shared.

NOTES
The liners are designed to protect the Planter Box interior by covering all metal edges and to manage exceeded watering in only one direction to reduce water spreading.

The liners can easily be removed for plant maintenance.

Planter Liners are finished in Black only.

The Bracket Finish can be specified with the same color of the EZ Upper A-Frame to minimize the visual of the mounting bracket and give a floating look to the Planter Box Kit.

PRODUCT OPTIONS

Beam Height	Configuration	Planter Finish	Bracket Finish
C Standard Height (28") (Shown)	**T** Two Planter Boxes	Foundation	Foundation
L Low Height (18")		Accent	Accent
		Mica	Mica

SAMPLE ORDER CODE

JZAPU C	T	68	68

CONFIGURATION

PRICING

	28" STANDARD HEIGHT (C)	18" LOW HEIGHT (L)
T	404	404

JZTBS
Laminate Shelves – EZ Upper A-Frame Mounted

These shelves provide an open storage space within the workstation or a casual space division between different environment.

WHAT'S INCLUDED
2 shelves (57" datum height) or 3 shelves (66" datum height) (as specified).

WHAT'S EXCLUDED
EZ Upper A-Frame for Laminate Shelves – Shared.

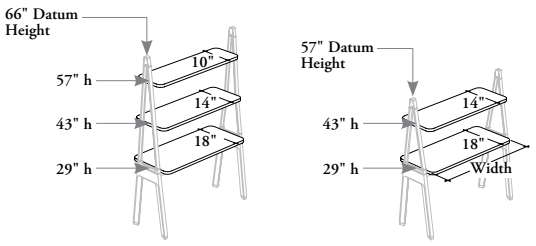

Three Shelves (66) Two Shelves (57)

PRODUCT OPTIONS

Beam Height	Datum Height	Width	Shelf Finish	Hardware Finish
C Standard Height (28")	**57** Two Shelves **66** Three Shelves	48, 54, 60, 66, 72, 78, 84	Source Laminate	Foundation Accent Mica

SAMPLE ORDER CODE

JZTBS C	57	48	3M	85

DIMENSIONS INCHES / MM

H	W	28" STANDARD HEIGHT (C)
57 / 1448	48 / 1219	441
57 / 1448	54 /1372	470
57 / 1448	60 / 1524	499
57 / 1448	66 / 1676	528
57 / 1448	72 / 1829	557
57 / 1448	78 / 1981	586
57 / 1448	84 / 2134	614
66 / 1676	48 / 1219	660
66 / 1676	54 /1372	704
66 / 1676	60 / 1524	748
66 / 1676	66 / 1676	792
66 / 1676	72 / 1829	836
66 / 1676	78 / 1981	880
66 / 1676	84 / 2134	920

ez fence screens

ez fence screens product map

J Z S A S B Solid Add-On Screen – EZ Fence Beam-Mounted

Page 881

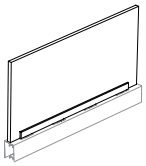

J Z S A G B Glass Add-On Screen – EZ Fence Beam-Mounted

Page 882

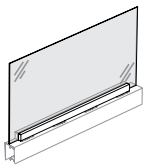

J Z S A X B Infinity Add-On Screen – EZ Fence Beam-Mounted

Page 886

J Z S A F B Fabric Add-On Screen – EZ Fence Beam-Mounted

Page 890

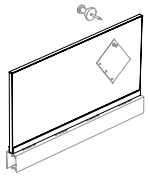

J Z S A Z B Smooth Felt Add-On Screen – EZ Fence Beam-Mounted

Page 893

J Z S A E B Felt Add-On Screen – EZ Fence Beam-Mounted

Page 894

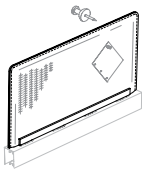

J Z S E S B Solid Elevated Screen – EZ Fence Beam-Mounted

Page 896

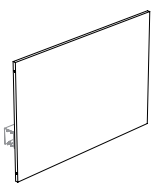

J Z S E F B Fabric Elevated Screen – EZ Fence Beam-Mounted

Page 898

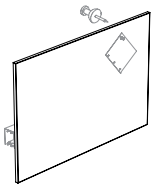

ez fence screens product map

J Z S E E B Felt Elevated Screen – EZ Fence Beam-Mounted

Page 899

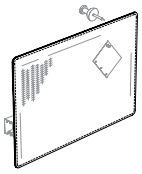

J Z S M S B Solid Modesty Screen – EZ Fence Beam-Mounted

Page 900

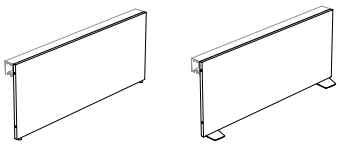

J Z S F S B Floor Screen – EZ Fence Beam-Mounted

Page 901

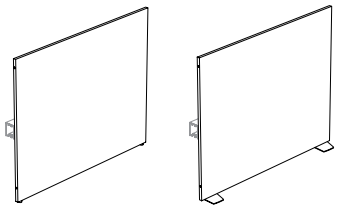

J Z S F G B Floor Screen with Glass – EZ Fence Beam-Mounted

Page 902

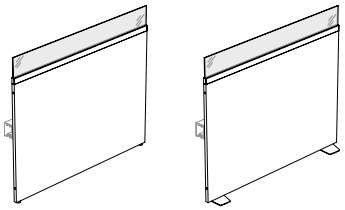

J Z S F S P Floor Screen – EZ Fence Post-Mounted

Page 908

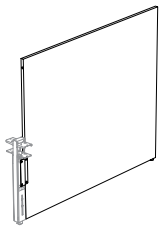

J Z S F G P Floor Screen with Glass – EZ Fence Post-Mounted

Page 910

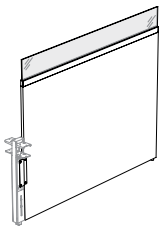

J Z S F O P Floor Screen with Metal Tower – Open – EZ Fence Post-Mounted

Page 912

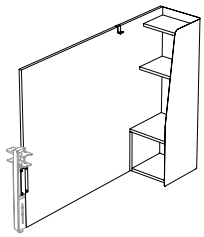

J Z S F D P Floor Screen with Metal Tower – One Drawer – EZ Fence Post-Mounted

Page 914

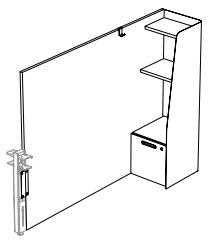

ez fence screens product map

J Z S F T P **Floor Screen with Metal Tower – Two Drawers – EZ Fence Post-Mounted**

Page 916

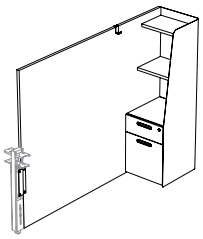

JZSASB
Solid Add-On Screen – EZ Fence Beam-Mounted

This screen mounts directly on top of a EZ Fence Beam to create seated privacy and space division at various heights in a workstation.

WHAT'S INCLUDED
1 solid screen, linking devices and caps (as specified), 2 screen covers and mounting hardware.

WHAT'S EXCLUDED
EZ Fence Beam, Chicago EZ Fence Beam and Sit and Slide Screens.

NOTES
The solid panel is 1" thick.

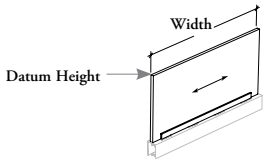

PRODUCT OPTIONS

Beam Height	Datum Height	Width	Configuration	Edge Corner Detail	Alignment Holes	Screen Finish	Cover Finish
C Standard Height (28") **L** Low Height (18")	42, 51, 57	48, 54, 60, 66, 72, 78, 84	**E** End **I** In-Line	**R** Radius (End Only) **S** Standard (Shown)	**N** Without Alignment Holes (Shown) **W** With Alignment Hole	Source Laminate	Foundation Accent Mica

SAMPLE ORDER CODE

JZSASB C	57	60	E	R	N	XS	74

DIMENSIONS INCHES / MM

PRICING

		28" STANDARD HEIGHT (C)				18" LOW HEIGHT (L)			
		END (E)		IN-LINE (I)		END (E)		IN-LINE (I)	
H	W	Standard (S)	Radius (R)	Standard (S)	Radius (R)	Standard (S)	Radius (R)	Standard (S)	Radius (R)
42 / 1067	48 / 1219	226	246	226	n/a	280	302	280	n/a
42 / 1067	54 / 1372	238	259	238	n/a	298	321	298	n/a
42 / 1067	60 / 1524	249	271	249	n/a	316	340	316	n/a
42 / 1067	66 / 1676	266	289	266	n/a	339	364	339	n/a
42 / 1067	72 / 1829	283	309	283	n/a	361	387	361	n/a
42 / 1067	78 / 1981	295	321	295	n/a	379	407	379	n/a
42 / 1067	84 / 2134	306	334	306	n/a	397	427	397	n/a
51 / 1295	48 / 1219	274	296	274	n/a	328	353	328	n/a
51 / 1295	54 / 1372	291	314	291	n/a	351	377	351	n/a
51 / 1295	60 / 1524	309	333	309	n/a	375	401	375	n/a
51 / 1295	66 / 1676	331	356	331	n/a	403	430	403	n/a
51 / 1295	72 / 1829	353	379	353	n/a	433	461	433	n/a
51 / 1295	78 / 1981	370	398	370	n/a	456	487	456	n/a
51 / 1295	84 / 2134	387	418	387	n/a	479	510	479	n/a
57 / 1448	48 / 1219	306	329	306	n/a	n/a	n/a	n/a	n/a
57 / 1448	54 / 1372	327	351	327	n/a	n/a	n/a	n/a	n/a
57 / 1448	60 / 1524	348	374	348	n/a	n/a	n/a	n/a	n/a
57 / 1448	66 / 1676	374	400	374	n/a	n/a	n/a	n/a	n/a
57 / 1448	72 / 1829	400	428	400	n/a	n/a	n/a	n/a	n/a
57 / 1448	78 / 1981	421	451	421	n/a	n/a	n/a	n/a	n/a
57 / 1448	84 / 2134	442	473	442	n/a	n/a	n/a	n/a	n/a

J Z S A G B

Glass Add-On Screen – EZ Fence Beam-Mounted

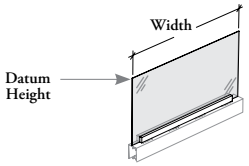

This screen mounts directly on top of a EZ Fence Beam to create seated privacy and space division at various heights in a workstation.

WHAT'S INCLUDED
1 glass screen, 2 screen covers and mounting hardware.

WHAT'S EXCLUDED
EZ Fence Beam, Chicago EZ Fence Beam and Linking Strip for Glass Screen.

NOTES
The tempered glass is 1/4" (6 mm thick).

Low Iron Glass Finishes (LA - LB) reduce the greenish render of standard glass. It must be used to match Glass Elevated Screen.

Frost Finishes (FT or LB) are single-sided etched, Satin (FB) is etched on both sides.

PRODUCT OPTIONS

Beam Height	Datum Height	Width	Configuration	Edge Corner Detail	Screen Finish	Cover Finish
C Standard Height (28") **L** Low Height (18")	42, 51, 57	48, 54, 60, 66, 72, 78, 84	**I** In-Line **L** End – Left **R** End – Right	**R** Radius (End Only) **S** Standard (Shown)	**Standard Glass:** **CL** Clear **FB** Satin **FT** Frost **Low Iron Glass:** **LA** Clear – Low Iron Glass **LB** Frost – Low Iron Glass	Foundation Accent Mica

SAMPLE ORDER CODE

JZSAGB C	51	48	I	S	FT	74

DIMENSIONS
INCHES / MM

PRICING

28" STANDARD HEIGHT (C)
END – LEFT (L) or END – RIGHT (R)

		STANDARD (S)					RADIUS (R)				
H	W	Clear (CL)	Frost (FT)	Satin (FB)	Clear – Low Iron Glass (LA)	Frost – Low Iron Glass (LB)	Clear (CL)	Frost (FT)	Satin (FB)	Clear – Low Iron Glass (LA)	Frost – Low Iron Glass (LB)
42 / 1067	48 / 1219	235	259	383	282	313	319	342	466	365	397
42 / 1067	54 / 1372	251	277	418	305	339	334	361	501	389	422
42 / 1067	60 / 1524	266	295	450	326	363	349	378	534	409	447
42 / 1067	66 / 1676	285	318	487	350	393	369	401	571	434	477
42 / 1067	72 / 1829	305	341	529	379	428	389	425	612	463	512
42 / 1067	78 / 1981	320	358	563	400	450	404	442	646	484	534
42 / 1067	84 / 2134	335	377	594	420	474	419	461	677	503	558
51 / 1295	48 / 1219	299	340	554	386	437	383	423	638	470	521
51 / 1295	54 / 1372	321	367	603	415	476	405	450	687	499	559
51 / 1295	60 / 1524	345	394	658	448	512	428	478	741	531	595
51 / 1295	66 / 1676	371	426	716	485	558	455	509	799	568	641
51 / 1295	72 / 1829	399	459	777	524	603	483	543	861	608	687
51 / 1295	78 / 1981	422	487	831	556	643	506	571	914	639	726
51 / 1295	84 / 2134	444	514	884	589	681	528	597	967	673	764

Pricing is continued on the following page.

JZSAGB
Glass Add-On Screen – EZ Fence Beam-Mounted (Continued)

DIMENSIONS INCHES / MM

PRICING

28" STANDARD HEIGHT (C)

END – LEFT (L) or END – RIGHT (R) (CONTINUED)

H	W	STANDARD (S)					RADIUS (R)				
		Clear (CL)	Frost (FT)	Satin (FB)	Clear – Low Iron Glass (LA)	Frost – Low Iron Glass (LB)	Clear (CL)	Frost (FT)	Satin (FB)	Clear – Low Iron Glass (LA)	Frost – Low Iron Glass (LB)
57 / 1448	48 / 1219	342	393	669	456	521	426	477	753	539	604
57 / 1448	54 /1372	370	427	727	490	567	454	510	811	573	651
57 / 1448	60 / 1524	397	461	797	529	611	480	544	880	612	695
57 / 1448	66 / 1676	429	499	869	575	668	513	582	952	659	752
57 / 1448	72 / 1829	462	538	943	622	720	545	622	1027	705	804
57 / 1448	78 / 1981	490	572	1009	660	771	573	655	1093	744	855
57 / 1448	84 / 2134	516	606	1078	703	819	600	689	1161	786	902

IN-LINE (I)

		STANDARD (S)					RADIUS (R)				
		Clear (CL)	Frost (FT)	Satin (FB)	Clear – Low Iron Glass (LA)	Frost – Low Iron Glass (LB)	Clear (CL)	Frost (FT)	Satin (FB)	Clear – Low Iron Glass (LA)	Frost – Low Iron Glass (LB)
42 / 1067	48 / 1219	235	259	383	282	313	n/a	n/a	n/a	n/a	n/a
42 / 1067	54 / 1372	251	277	418	305	339	n/a	n/a	n/a	n/a	n/a
42 / 1067	60 / 1524	266	295	450	326	363	n/a	n/a	n/a	n/a	n/a
42 / 1067	66 / 1676	285	318	487	350	393	n/a	n/a	n/a	n/a	n/a
42 / 1067	72 / 1829	305	341	529	379	428	n/a	n/a	n/a	n/a	n/a
42 / 1067	78 / 1981	320	358	563	400	450	n/a	n/a	n/a	n/a	n/a
42 / 1067	84 / 2134	335	377	594	420	474	n/a	n/a	n/a	n/a	n/a
51 / 1295	48 / 1219	299	340	554	386	437	n/a	n/a	n/a	n/a	n/a
51 / 1295	54 / 1372	321	367	603	415	476	n/a	n/a	n/a	n/a	n/a
51 / 1295	60 / 1524	345	394	658	448	512	n/a	n/a	n/a	n/a	n/a
51 / 1295	66 / 1676	371	426	716	485	558	n/a	n/a	n/a	n/a	n/a
51 / 1295	72 / 1829	399	459	777	524	603	n/a	n/a	n/a	n/a	n/a
51 / 1295	78 / 1981	422	487	831	556	643	n/a	n/a	n/a	n/a	n/a
51 / 1295	84 / 2134	444	514	884	589	681	n/a	n/a	n/a	n/a	n/a
57 / 1448	48 / 1219	342	393	669	456	521	n/a	n/a	n/a	n/a	n/a
57 / 1448	54 / 1372	370	427	727	490	567	n/a	n/a	n/a	n/a	n/a
57 / 1448	60 / 1524	397	461	797	529	611	n/a	n/a	n/a	n/a	n/a
57 / 1448	66 / 1676	429	499	869	575	668	n/a	n/a	n/a	n/a	n/a
57 / 1448	72 / 1829	462	538	943	622	720	n/a	n/a	n/a	n/a	n/a
57 / 1448	78 / 1981	490	572	1009	660	771	n/a	n/a	n/a	n/a	n/a
57 / 1448	84 / 2134	516	606	1078	703	819	n/a	n/a	n/a	n/a	n/a

Pricing is continued on the following page.

J Z S A G B

Glass Add-On Screen – EZ Fence Beam-Mounted (Continued)

DIMENSIONS INCHES / MM

PRICING

18" STANDARD HEIGHT (C)

END – LEFT (L) or END – RIGHT (R)

		STANDARD (S)					RADIUS (R)				
H	W	Clear (CL)	Frost (FT)	Satin (FB)	Clear – Low Iron Glass (LA)	Frost – Low Iron Glass (LB)	Clear (CL)	Frost (FT)	Satin (FB)	Clear – Low Iron Glass (LA)	Frost – Low Iron Glass (LB)
42 / 1067	48 / 1219	307	349	574	398	451	391	433	658	481	535
42 / 1067	54 / 1372	329	377	624	428	492	413	461	708	512	575
42 / 1067	60 / 1524	354	406	681	462	529	437	490	764	545	612
42 / 1067	66 / 1676	382	438	741	500	577	465	522	825	583	660
42 / 1067	72 / 1829	409	473	805	541	623	493	557	889	624	706
42 / 1067	78 / 1981	434	502	861	573	665	517	586	944	657	748
42 / 1067	84 / 2134	457	530	916	609	704	541	614	1000	693	788
51 / 1295	48 / 1219	371	429	746	502	577	455	513	829	586	660
51 / 1295	54 / 1372	403	467	811	539	629	486	551	894	623	712
51 / 1295	60 / 1524	432	505	890	583	679	515	588	973	667	762
51 / 1295	66 / 1676	469	548	971	636	742	552	631	1054	719	826
51 / 1295	72 / 1829	503	592	1054	687	799	587	675	1138	770	883
51 / 1295	78 / 1981	535	629	1129	730	857	618	712	1212	813	941
51 / 1295	84 / 2134	565	667	1208	780	912	648	751	1291	863	995

IN-LINE (I)

		STANDARD (S)					RADIUS (R)				
		Clear (CL)	Frost (FT)	Satin (FB)	Clear – Low Iron Glass (LA)	Frost – Low Iron Glass (LB)	Clear (CL)	Frost (FT)	Satin (FB)	Clear – Low Iron Glass (LA)	Frost – Low Iron Glass (LB)
42 / 1067	48 / 1219	307	349	574	398	451	n/a	n/a	n/a	n/a	n/a
42 / 1067	54 /1372	329	377	624	428	492	n/a	n/a	n/a	n/a	n/a
42 / 1067	60 / 1524	354	406	681	462	529	n/a	n/a	n/a	n/a	n/a
42 / 1067	66 / 1676	382	438	741	500	577	n/a	n/a	n/a	n/a	n/a
42 / 1067	72 / 1829	409	473	805	541	623	n/a	n/a	n/a	n/a	n/a
42 / 1067	78 / 1981	434	502	861	573	665	n/a	n/a	n/a	n/a	n/a
42 / 1067	84 / 2134	457	530	916	609	704	n/a	n/a	n/a	n/a	n/a
51 / 1295	48 / 1219	371	429	746	502	577	n/a	n/a	n/a	n/a	n/a
51 / 1295	54 / 1372	403	467	811	539	629	n/a	n/a	n/a	n/a	n/a
51 / 1295	60 / 1524	432	505	890	583	679	n/a	n/a	n/a	n/a	n/a
51 / 1295	66 / 1676	469	548	971	636	742	n/a	n/a	n/a	n/a	n/a
51 / 1295	72 / 1829	503	592	1054	687	799	n/a	n/a	n/a	n/a	n/a
51 / 1295	78 / 1981	535	629	1129	730	857	n/a	n/a	n/a	n/a	n/a
51 / 1295	84 / 2134	565	667	1208	780	912	n/a	n/a	n/a	n/a	n/a

JZSAXB

Infinity Add-On Screen – EZ Fence Beam-Mounted

This screen mounts directly on top of a EZ Fence Beam to create seated privacy and space division at various heights in a workstation.

WHAT'S INCLUDED
1 infinity screen, 2 screen covers and mounting hardware.

WHAT'S EXCLUDED
EZ Fence Beam and Chicago EZ Fence Beam.

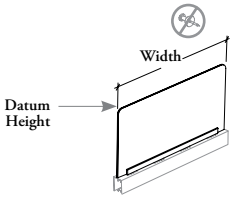

PRODUCT OPTIONS

Beam Height	Datum Height	Width	Configuration	Corner Detail	Screen Finish	Cover Finish
C Standard Height (28") **L** Low Height (18")	42, 51, 57	48, 54, 60, 66, 72, 78, 84	**E** End **I** In-Line	**R** Radius	Panel Fabric	Foundation Accent Mica

SAMPLE ORDER CODE

JZSAXB C	51	48	I	R	T540	74

DIMENSIONS INCHES / MM

PRICING

		28" STANDARD HEIGHT (C)							
		END (E)							
		RADIUS (R)							
H	W	Gr. A/ COM	Gr. 1	Gr. 2	Gr. 3	Gr. 4	Gr. 5	Gr. 6	Gr. 7
42 / 1067	48 / 1219	525	545	585	610	643	673	698	725
42 / 1067	54 / 1372	551	573	615	643	679	716	744	774
42 / 1067	60 / 1524	578	601	650	681	722	761	790	822
42 / 1067	66 / 1676	608	636	688	724	764	806	842	875
42 / 1067	72 / 1829	638	668	724	760	807	853	890	928
42 / 1067	78 / 1981	665	693	756	795	843	893	933	974
42 / 1067	84 / 2134	690	723	788	829	885	937	980	1024
51 / 1295	48 / 1219	647	675	733	773	819	864	904	941
51 / 1295	54 / 1372	684	716	780	821	875	926	967	1010
51 / 1295	60 / 1524	723	756	831	876	934	991	1037	1083
51 / 1295	66 / 1676	763	802	878	927	991	1054	1105	1155
51 / 1295	72 / 1829	805	850	930	985	1053	1122	1176	1231
51 / 1295	78 / 1981	843	890	977	1037	1110	1183	1242	1302
51 / 1295	84 / 2134	880	929	1024	1088	1166	1244	1306	1369

Pricing is continued on the following page.

JZSAXB

Infinity Add-On Screen – EZ Fence Beam-Mounted (Continued)

DIMENSIONS INCHES / MM

PRICING

28" STANDARD HEIGHT (C)

END (E) (CONTINUED)

RADIUS (R)

H	W	Gr. A/ COM	Gr. 1	Gr. 2	Gr. 3	Gr. 4	Gr. 5	Gr. 6	Gr. 7
57 / 1448	48 / 1219	829	868	935	980	1038	1095	1139	1187
57 / 1448	54 / 1372	884	925	1000	1050	1115	1176	1227	1281
57 / 1448	60 / 1524	938	981	1066	1123	1191	1261	1315	1375
57 / 1448	66 / 1676	996	1045	1138	1198	1274	1349	1409	1473
57 / 1448	72 / 1829	1054	1105	1206	1273	1356	1437	1502	1568
57 / 1448	78 / 1981	1110	1165	1273	1346	1433	1523	1593	1665
57 / 1448	84 / 2134	1163	1226	1341	1418	1511	1608	1683	1761

IN-LINE (I)

RADIUS (R)

		Gr. A/ COM	Gr. 1	Gr. 2	Gr. 3	Gr. 4	Gr. 5	Gr. 6	Gr. 7
42 / 1067	48 / 1219	525	545	585	610	643	673	698	725
42 / 1067	54 / 1372	551	573	615	643	679	716	744	774
42 / 1067	60 / 1524	578	601	650	681	722	761	790	822
42 / 1067	66 / 1676	608	636	688	724	764	806	842	875
42 / 1067	72 / 1829	638	668	724	760	807	853	890	928
42 / 1067	78 / 1981	665	693	756	795	843	893	933	974
42 / 1067	84 / 2134	690	723	788	829	885	937	980	1024
51 / 1295	48 / 1219	647	675	733	773	819	864	904	941
51 / 1295	54 / 1372	684	716	780	821	875	926	967	1010
51 / 1295	60 / 1524	723	756	831	876	934	991	1037	1083
51 / 1295	66 / 1676	763	802	878	927	991	1054	1105	1155
51 / 1295	72 / 1829	805	850	930	985	1053	1122	1176	1231
51 / 1295	78 / 1981	843	890	977	1037	1110	1183	1242	1302
51 / 1295	84 / 2134	880	929	1024	1088	1166	1244	1306	1369
57 / 1448	48 / 1219	829	868	935	980	1038	1095	1139	1187
57 / 1448	54 / 1372	884	925	1000	1050	1115	1176	1227	1281
57 / 1448	60 / 1524	938	981	1066	1123	1191	1261	1315	1375
57 / 1448	66 / 1676	996	1045	1138	1198	1274	1349	1409	1473
57 / 1448	72 / 1829	1054	1105	1206	1273	1356	1437	1502	1568
57 / 1448	78 / 1981	1110	1165	1273	1346	1433	1523	1593	1665
57 / 1448	84 / 2134	1163	1226	1341	1418	1511	1608	1683	1761

Pricing is continued on the following page.

J Z S A X B

Infinity Add-On Screen – EZ Fence Beam-Mounted (Continued)

DIMENSIONS
INCHES / MM

PRICING

18" LOW HEIGHT (L)

END (E)

RADIUS (R)

H	W	Gr. A/ COM	Gr. 1	Gr. 2	Gr. 3	Gr. 4	Gr. 5	Gr. 6	Gr. 7
42 / 1067	48 / 1219	679	708	767	807	856	904	943	983
42 / 1067	54 / 1372	718	751	817	860	915	967	1012	1056
42 / 1067	60 / 1524	759	795	870	918	977	1036	1083	1132
42 / 1067	66 / 1676	803	842	922	972	1038	1104	1157	1209
42 / 1067	72 / 1829	847	893	977	1034	1104	1175	1231	1288
42 / 1067	78 / 1981	889	936	1027	1089	1165	1240	1302	1363
42 / 1067	84 / 2134	928	979	1078	1144	1224	1305	1370	1435
51 / 1295	48 / 1219	951	996	1070	1119	1184	1249	1297	1351
51 / 1295	54 / 1372	1017	1064	1147	1203	1275	1343	1401	1462
51 / 1295	60 / 1524	1082	1132	1224	1288	1363	1442	1501	1569
51 / 1295	66 / 1676	1152	1208	1312	1379	1463	1546	1612	1685
51 / 1295	72 / 1829	1221	1276	1391	1465	1558	1648	1720	1793
51 / 1295	78 / 1981	1289	1348	1470	1552	1648	1750	1827	1907
51 / 1295	84 / 2134	1353	1424	1552	1638	1742	1851	1935	2023

IN-LINE (I)

RADIUS (R)

		Gr. A/ COM	Gr. 1	Gr. 2	Gr. 3	Gr. 4	Gr. 5	Gr. 6	Gr. 7
42 / 1067	48 / 1219	679	708	767	807	856	904	943	983
42 / 1067	54 / 1372	718	751	817	860	915	967	1012	1056
42 / 1067	60 / 1524	759	795	870	918	977	1036	1083	1132
42 / 1067	66 / 1676	803	842	922	972	1038	1104	1157	1209
42 / 1067	72 / 1829	847	893	977	1034	1104	1175	1231	1288
42 / 1067	78 / 1981	889	936	1027	1089	1165	1240	1302	1363
42 / 1067	84 / 2134	928	979	1078	1144	1224	1305	1370	1435
51 / 1295	48 / 1219	951	996	1070	1119	1184	1249	1297	1351
51 / 1295	54 / 1372	1017	1064	1147	1203	1275	1343	1401	1462
51 / 1295	60 / 1524	1082	1132	1224	1288	1363	1442	1501	1569
51 / 1295	66 / 1676	1152	1208	1312	1379	1463	1546	1612	1685
51 / 1295	72 / 1829	1221	1276	1391	1465	1558	1648	1720	1793
51 / 1295	78 / 1981	1289	1348	1470	1552	1648	1750	1827	1907
51 / 1295	84 / 2134	1353	1424	1552	1638	1742	1851	1935	2023

J Z S A F B

Fabric Add-On Screen – EZ Fence Beam-Mounted

This screen mounts directly on top of a EZ Fence Beam to create seated privacy and space division at various heights in a workstation.

WHAT'S INCLUDED
1 fabric screen, 1 linking device, 2 screen covers and mounting hardware.

WHAT'S EXCLUDED
EZ Fence Beam and Chicago EZ Fence Beam.

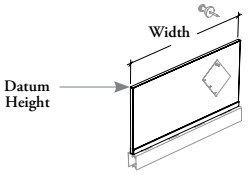

PRODUCT OPTIONS

Beam Height	Datum Height	Width	Configuration	Corner Detail	Screen Finish	Frame Finish
C Standard Height (28") **L** Low Height (18")	42, 51, 57	48, 54, 60, 66, 72, 78, 84	**E** End **I** In-Line	**S** Standard	Panel Fabric	Foundation Accent Mica

SAMPLE ORDER CODE

JZSAFB C	51	48	I	S	T540	74

DIMENSIONS INCHES / MM

PRICING

28" STANDARD HEIGHT (C)
END (E)
STANDARD (S)

H	W	Gr. A/ COM	Gr. 1	Gr. 2	Gr. 3	Gr. 4	Gr. 5	Gr. 6	Gr. 7
42 / 1067	48 / 1219	580	600	639	665	697	727	753	780
42 / 1067	54 / 1372	624	646	688	716	752	789	817	847
42 / 1067	60 / 1524	655	679	727	759	799	839	868	900
42 / 1067	66 / 1676	660	688	740	776	817	858	894	927
42 / 1067	72 / 1829	683	713	769	805	853	898	935	973
42 / 1067	78 / 1981	719	747	811	849	898	948	987	1029
42 / 1067	84 / 2134	751	783	848	890	945	998	1041	1085
51 / 1295	48 / 1219	640	668	726	766	812	857	897	934
51 / 1295	54 / 1372	693	724	788	829	883	934	976	1018
51 / 1295	60 / 1524	734	768	842	887	945	1002	1049	1095
51 / 1295	66 / 1676	749	788	864	913	977	1041	1092	1141
51 / 1295	72 / 1829	778	824	904	958	1027	1095	1150	1204
51 / 1295	78 / 1981	822	869	956	1016	1089	1162	1221	1281
51 / 1295	84 / 2134	864	913	1008	1072	1150	1227	1290	1353

Pricing is continued on the following page.

JZSAFB

Fabric Add-On Screen – EZ Fence Beam-Mounted (Continued)

DIMENSIONS INCHES / MM | **PRICING**

28" STANDARD HEIGHT (C)

END (E) (CONTINUED)

STANDARD (S)

H	W	Gr. A/ COM	Gr. 1	Gr. 2	Gr. 3	Gr. 4	Gr. 5	Gr. 6	Gr. 7
57 / 1448	48 / 1219	861	899	966	1012	1070	1126	1170	1218
57 / 1448	54 / 1372	935	976	1051	1101	1166	1227	1278	1332
57 / 1448	60 / 1524	992	1035	1119	1176	1245	1314	1369	1428
57 / 1448	66 / 1676	1045	1094	1187	1247	1322	1398	1458	1522
57 / 1448	72 / 1829	1119	1170	1271	1337	1421	1502	1567	1633
57 / 1448	78 / 1981	1176	1231	1339	1412	1499	1589	1659	1731
57 / 1448	84 / 2134	1228	1291	1406	1482	1576	1673	1748	1826

IN-LINE (I)

STANDARD (S)

		Gr. A/ COM	Gr. 1	Gr. 2	Gr. 3	Gr. 4	Gr. 5	Gr. 6	Gr. 7
42 / 1067	48 / 1219	580	600	639	665	697	727	753	780
42 / 1067	54 / 1372	624	646	688	716	752	789	817	847
42 / 1067	60 / 1524	655	679	727	759	799	839	868	900
42 / 1067	66 / 1676	660	688	740	776	817	858	894	927
42 / 1067	72 / 1829	683	713	769	805	853	898	935	973
42 / 1067	78 / 1981	719	747	811	849	898	948	987	1029
42 / 1067	84 / 2134	751	783	848	890	945	998	1041	1085
51 / 1295	48 / 1219	640	668	726	766	812	857	897	934
51 / 1295	54 / 1372	693	724	788	829	883	934	976	1018
51 / 1295	60 / 1524	734	768	842	887	945	1002	1049	1095
51 / 1295	66 / 1676	749	788	864	913	977	1041	1092	1141
51 / 1295	72 / 1829	778	824	904	958	1027	1095	1150	1204
51 / 1295	78 / 1981	822	869	956	1016	1089	1162	1221	1281
51 / 1295	84 / 2134	864	913	1008	1072	1150	1227	1290	1353
57 / 1448	48 / 1219	861	899	966	1012	1070	1126	1170	1218
57 / 1448	54 / 1372	935	976	1051	1101	1166	1227	1278	1332
57 / 1448	60 / 1524	992	1035	1119	1176	1245	1314	1369	1428
57 / 1448	66 / 1676	1045	1094	1187	1247	1322	1398	1458	1522
57 / 1448	72 / 1829	1119	1170	1271	1337	1421	1502	1567	1633
57 / 1448	78 / 1981	1176	1231	1339	1412	1499	1589	1659	1731
57 / 1448	84 / 2134	1228	1291	1406	1482	1576	1673	1748	1826

Pricing is continued on the following page.

J Z S A F B

Fabric Add-On Screen – EZ Fence Beam-Mounted (Continued)

DIMENSIONS INCHES / MM | **PRICING**

18" LOW HEIGHT (L)

END (E)

STANDARD (S)

H	W	Gr. A/ COM	Gr. 1	Gr. 2	Gr. 3	Gr. 4	Gr. 5	Gr. 6	Gr. 7
42 / 1067	48 / 1219	677	708	767	807	855	902	943	981
42 / 1067	54 / 1372	733	767	832	875	930	984	1027	1071
42 / 1067	60 / 1524	777	813	889	936	995	1054	1102	1151
42 / 1067	66 / 1676	799	839	919	969	1035	1101	1153	1205
42 / 1067	72 / 1829	835	882	965	1022	1093	1163	1219	1276
42 / 1067	78 / 1981	882	929	1020	1082	1158	1234	1295	1356
42 / 1067	84 / 2134	926	977	1075	1140	1221	1302	1366	1431
51 / 1295	48 / 1219	1008	1053	1126	1176	1241	1306	1354	1408
51 / 1295	54 / 1372	1097	1144	1227	1282	1355	1423	1480	1540
51 / 1295	60 / 1524	1163	1213	1305	1369	1444	1523	1582	1651
51 / 1295	66 / 1676	1242	1298	1402	1470	1553	1637	1703	1776
51 / 1295	72 / 1829	1347	1402	1517	1590	1684	1774	1846	1920
51 / 1295	78 / 1981	1413	1472	1594	1676	1772	1875	1951	2031
51 / 1295	84 / 2134	1472	1544	1672	1756	1862	1970	2054	2141

IN-LINE (I)

STANDARD (S)

		Gr. A/ COM	Gr. 1	Gr. 2	Gr. 3	Gr. 4	Gr. 5	Gr. 6	Gr. 7
42 / 1067	48 / 1219	677	708	767	807	855	902	943	981
42 / 1067	54 / 1372	733	767	832	875	930	984	1027	1071
42 / 1067	60 / 1524	777	813	889	936	995	1054	1102	1151
42 / 1067	66 / 1676	799	839	919	969	1035	1101	1153	1205
42 / 1067	72 / 1829	835	882	965	1022	1093	1163	1219	1276
42 / 1067	78 / 1981	882	929	1020	1082	1158	1234	1295	1356
42 / 1067	84 / 2134	926	977	1075	1140	1221	1302	1366	1431
51 / 1295	48 / 1219	1008	1053	1126	1176	1241	1306	1354	1408
51 / 1295	54 / 1372	1097	1144	1227	1282	1355	1423	1480	1540
51 / 1295	60 / 1524	1163	1213	1305	1369	1444	1523	1582	1651
51 / 1295	66 / 1676	1242	1298	1402	1470	1553	1637	1703	1776
51 / 1295	72 / 1829	1347	1402	1517	1590	1684	1774	1846	1920
51 / 1295	78 / 1981	1413	1472	1594	1676	1772	1875	1951	2031
51 / 1295	84 / 2134	1472	1544	1672	1756	1862	1970	2054	2141

JZSAZB

Smooth Felt Add-On Screen – EZ Fence Beam-Mounted

This screen mounts directly on top of a EZ Fence Beam to create seated privacy and space division at various heights in a workstation.

WHAT'S INCLUDED
1 smooth felt screen, 2 screen covers and mounting hardware.

WHAT'S EXCLUDED
EZ Fence Beam and Chicago EZ Fence Beam.

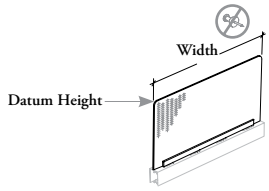

PRODUCT OPTIONS

Beam Height	Datum Height	Width	Configuration	Corner Detail	Felt Finish	Cover Finish
C Standard Height (28")	42	48, 54, 60, 66, 72, 78, 84	**E** End **I** In-Line	**R** Radius	Smooth	Foundation Accent Mica

SAMPLE ORDER CODE

JZSAZB C	42	60	E	R	QR	74

DIMENSIONS INCHES / MM

H	W
42 / 1067	48 / 1219
42 / 1067	54 / 1372
42 / 1067	60 / 1524
42 / 1067	66 / 1676
42 / 1067	72 / 1829
42 / 1067	78 / 1981
42 / 1067	84 / 2134

PRICING

28" STANDARD HEIGHT (C)	
END (E)	IN-LINE (I)
RADIUS (R)	
295	295
318	318
387	387
419	419
427	427
441	441
442	442

JZSAEB

Felt Add-On Screen – EZ Fence Beam-Mounted

This screen mounts directly on top of a EZ Fence Beam to create seated privacy and space division at various heights in a workstation.

WHAT'S INCLUDED
1 felt screen, 2 screen covers and mounting hardware.

WHAT'S EXCLUDED
EZ Fence Beam and Chicago EZ Fence Beam.

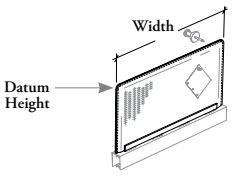

PRODUCT OPTIONS

Beam Height	Datum Height	Width	Configuration	Corner Detail	Felt Finish	Stitches Finish	Cover Finish
C Standard Height (28") **L** Low Height (18")	42, 51, 57	48, 54, 60, 66, 72, 78, 84	**E** End **I** In-Line	**R** Radius	Loft	**C** Carbon Coordinate **E** Shale Coordinate **G** Carrara Coordinate **M** Umber Coordinate	Foundation Accent Mica

SAMPLE ORDER CODE

JZSAEB C	51	48	I	R	RB11	C	74

DIMENSIONS
INCHES / MM

PRICING

		28" STANDARD HEIGHT (C)		18" LOW HEIGHT (L)	
		END (E)	IN-LINE (I)	END (E)	IN-LINE (I)
H	W	RADIUS (R)			
42 / 1067	48 / 1219	558	558	711	711
42 / 1067	54 / 1372	600	600	770	770
42 / 1067	60 / 1524	643	643	827	827
42 / 1067	66 / 1676	690	690	891	891
42 / 1067	72 / 1829	738	738	955	955
42 / 1067	78 / 1981	781	781	1013	1013
42 / 1067	84 / 2134	824	824	1072	1072
51 / 1295	48 / 1219	698	698	826	826
51 / 1295	54 / 1372	755	755	899	899
51 / 1295	60 / 1524	811	811	972	972
51 / 1295	66 / 1676	872	872	1049	1049
51 / 1295	72 / 1829	935	935	1126	1126
51 / 1295	78 / 1981	992	992	1199	1199
51 / 1295	84 / 2134	1049	1049	1271	1271

Pricing is continued on the following page.

JZSAEB

Felt Add-On Screen – EZ Fence Beam-Mounted (Continued)

DIMENSIONS INCHES / MM		PRICING			
		28" STANDARD HEIGHT (C)		18" LOW HEIGHT (L)	
		END (E)	IN-LINE (I)	END (E)	IN-LINE (I)
H	W	RADIUS (R)			
57 / 1448	48 / 1219	775	775	n/a	n/a
57 / 1448	54 / 1372	841	841	n/a	n/a
57 / 1448	60 / 1524	907	907	n/a	n/a
57 / 1448	66 / 1676	978	978	n/a	n/a
57 / 1448	72 / 1829	1050	1050	n/a	n/a
57 / 1448	78 / 1981	1116	1116	n/a	n/a
57 / 1448	84 / 2134	1182	1182	n/a	n/a

JZSESB

Solid Elevated Screen – EZ Fence Beam-Mounted

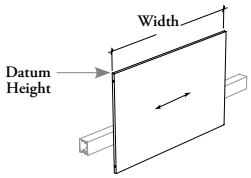

This screen mounts directly on front of a EZ Fence Beam to create privacy and physical separation.

WHAT'S INCLUDED
1 solid screen, linking devices and caps (as specified) and mounting hardware.

WHAT'S EXCLUDED
EZ Fence Beam, Chicago EZ Fence Beam, Sit and Slide Screens.

NOTES
The solid panel is 1" thick.

When In-Line (I) Configuration is specified, only Width Extension for Corner Application (S) is available.

For Width Extension for Corner Application details, refer to the Application Guide.

PRODUCT OPTIONS

Modesty Base Height	Datum Height	Width	Configuration	Width Extension for Corner Application	Corner Detail	Alignment Holes	Screen Finish
10 10" from floor	42, 51, 57	48, 54, 60, 66, 72, 78, 84	**I** In-Line **L** End – Left **R** End – Right	**O** One Side Extended **S** Standard Width	**S** Standard	**N** Without Alignment Holes **W** With Alignment Holes (Shown)	Source Laminate

SAMPLE ORDER CODE

JZSESB 10	51	60	L	S	S	N	XS

DIMENSIONS
INCHES / MM

PRICING

H	W	END – LEFT (L) or END – RIGHT (R)	IN-LINE (I)
42 / 1067	48 / 1219	392	392
42 / 1067	54 / 1372	434	434
42 / 1067	60 / 1524	471	471
42 / 1067	66 / 1676	495	495
42 / 1067	72 / 1829	520	520
42 / 1067	78 / 1981	538	538
42 / 1067	84 / 2134	563	563
51 / 1295	48 / 1219	443	443
51 / 1295	54 / 1372	487	487
51 / 1295	60 / 1524	532	532
51 / 1295	66 / 1676	561	561
51 / 1295	72 / 1829	589	589
51 / 1295	78 / 1981	619	619
51 / 1295	84 / 2134	648	648

Pricing is continued on the following page.

JZSESB

Solid Elevated Screen – EZ Fence Beam-Mounted (Continued)

DIMENSIONS INCHES / MM		PRICING	
H	W	END – LEFT (L) or END – RIGHT (R)	IN-LINE (I)
57 / 1448	48 / 1219	476	476
57 / 1448	54 / 1372	525	525
57 / 1448	60 / 1524	573	573
57 / 1448	66 / 1676	607	607
57 / 1448	72 / 1829	640	640
57 / 1448	78 / 1981	672	672
57 / 1448	84 / 2134	704	704

J Z S E F B

Fabric Elevated Screen – EZ Fence Beam-Mounted

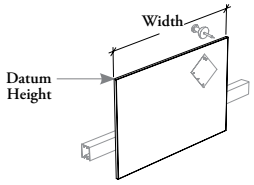

This screen mounts directly on side of a EZ Fence Beam to add tackable surface, create privacy and physical separation in a workstation.

WHAT'S INCLUDED
1 fabric screen, linking devices and mounting hardware.

WHAT'S EXCLUDED
EZ Fence Beam and Chicago EZ Fence Beam.

NOTES
The fabric panel is 1 1/4" thick.

Fabric for each side is specified separately.

When In-Line (I) Configuration is specified, only Width Extension for Corner application (S) is available.

For Width Extension for Corner Application details, refer to the Application Guide.

PRODUCT OPTIONS

Modesty Base Height	Datum Height	Width	Configuration	Width Extension for Corner Application	Inside Screen Finish	Outside Screen Finish	Frame Finish
10 10" from floor	42, 51, 57	48, 54, 60, 66, 72, 78, 84	**I** In-Line **L** End – Left **R** End – Right	**O** One Sided Extended **S** Standard Width	Panel Fabric	Panel Fabric	Foundation Accent Mica

SAMPLE ORDER CODE

JZSEFB 10	51	72	R	S	T540	T540	74

DIMENSIONS INCHES / MM

PRICING

		END – LEFT (L), END – RIGHT (R) or IN-LINE (I)							
H	W	Gr. A/ COM	Gr. 1	Gr. 2	Gr. 3	Gr. 4	Gr. 5	Gr. 6	Gr. 7
42 / 1067	48 / 1219	684	932	993	1035	1088	1141	1179	1220
42 / 1067	54 / 1372	762	1036	1105	1151	1209	1266	1307	1354
42 / 1067	60 / 1524	836	1139	1218	1265	1330	1391	1439	1488
42 / 1067	66 / 1676	878	1206	1288	1343	1412	1478	1532	1588
42 / 1067	72 / 1829	915	1271	1363	1422	1495	1567	1629	1689
42 / 1067	78 / 1981	956	1341	1436	1499	1581	1658	1721	1785
42 / 1067	84 / 2134	996	1408	1513	1580	1662	1749	1819	1887
51 / 1295	48 / 1219	786	1090	1171	1218	1282	1346	1393	1445
51 / 1295	54 / 1372	834	1174	1260	1314	1385	1456	1513	1572
51 / 1295	60 / 1524	885	1257	1352	1413	1491	1570	1635	1693
51 / 1295	66 / 1676	929	1334	1437	1504	1589	1676	1739	1806
51 / 1295	72 / 1829	974	1413	1524	1598	1690	1784	1853	1927
51 / 1295	78 / 1981	1017	1492	1611	1688	1789	1888	1965	2042
51 / 1295	84 / 2134	1061	1570	1702	1782	1887	1993	2076	2162
57 / 1448	48 / 1219	812	1157	1243	1301	1375	1446	1503	1561
57 / 1448	54 / 1372	863	1250	1343	1407	1488	1566	1627	1690
57 / 1448	60 / 1524	915	1335	1442	1512	1602	1687	1755	1826
57 / 1448	66 / 1676	962	1420	1534	1611	1709	1802	1876	1955
57 / 1448	72 / 1829	1010	1508	1634	1715	1819	1920	2006	2083
57 / 1448	78 / 1981	1058	1592	1725	1815	1927	2038	2126	2217
57 / 1448	84 / 2134	1105	1678	1820	1916	2037	2155	2248	2343

JZSEEB
Felt Elevated Screen – EZ Fence Beam-Mounted

This screen mounts directly on side of a EZ Fence Beam to add acoustic and tackable surface, create privacy and physical separation.

WHAT'S INCLUDED
1 felt screen and mounting hardware.

WHAT'S EXCLUDED
EZ Fence Beam and Chicago EZ Fence Beam.

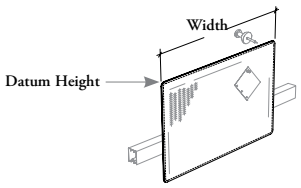

PRODUCT OPTIONS

Modesty Base Height	Datum Height	Width	Configuration	Corner Detail	Screen Finish	Stitches Finish
10 10" from floor	42, 51, 57	48, 54, 60, 66, 72, 78, 84	**I** In-Line **L** End – Left **R** End – Right	**R** Radius	Loft	**C** Carbon Coordinate **E** Shale Coordinate **G** Carrara Coordinate **M** Umber Coordinate

SAMPLE ORDER CODE

JZSEEB 10	51	78	R	R	RB11	C

DIMENSIONS INCHES / MM

PRICING

H	W	END – LEFT (L) or END – RIGHT (R)	IN-LINE (I)
42 / 1067	48 / 1219	807	807
42 / 1067	54 / 1372	919	919
42 / 1067	60 / 1524	1006	1006
42 / 1067	66 / 1676	1090	1090
42 / 1067	72 / 1829	1176	1176
42 / 1067	78 / 1981	1261	1261
42 / 1067	84 / 2134	1346	1346
51 / 1295	48 / 1219	999	999
51 / 1295	54 / 1372	1137	1137
51 / 1295	60 / 1524	1244	1244
51 / 1295	66 / 1676	1354	1354
51 / 1295	72 / 1829	1463	1463
51 / 1295	78 / 1981	1571	1571
51 / 1295	84 / 2134	1682	1682
57 / 1448	48 / 1219	1126	1126
57 / 1448	54 / 1372	1278	1278
57 / 1448	60 / 1524	1404	1404
57 / 1448	66 / 1676	1529	1529
57 / 1448	72 / 1829	1654	1654
57 / 1448	78 / 1981	1777	1777
57 / 1448	84 / 2134	1902	1902

J Z S M S B

Solid Modesty Screen – EZ Fence Beam-Mounted

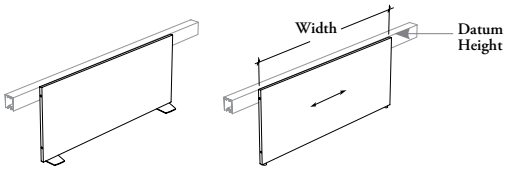

This modesty screen attaches to the front of a EZ Fence Beam to provide seated privacy space division and stability to the structure.

WHAT'S INCLUDED
1 solid modesty screen, linking devices and caps (as specified), levelers or foot with covers (as specified) and mounting hardware.

WHAT'S EXCLUDED
EZ Fence Beam for Corridor and Chicago EZ Fence for Corridor.

NOTES
The solid panel is 1" thick.

When Levelers (L) Support Style is specified, Foot Finish is **not** available.

This Modesty Screen must be installed with an EZ Fence Beam for Corridor or a Chicago EZ Fence for Corridor.

PRODUCT OPTIONS

Support Style	Datum Height	Width	Configuration	Corner Detail	Alignment Holes	Screen Finish	Foot Finish (If Applicable)
F Foot **L** Levelers	28	48, 54, 60, 66, 72, 78, 84	**I** In-Line **L** End – Left **R** End – Right	**S** Standard	**N** Without Alignment Holes **W** With Alignment Holes (Shown)	Source Laminate	Foundation Accent Mica

SAMPLE ORDER CODE

JZSMSB F	28	48	I	S	N	XS	74

DIMENSIONS INCHES / MM

H	W
28 / 711	48 / 1219
28 / 711	54 / 1372
28 / 711	60 / 1524
28 / 711	66 / 1676
28 / 711	72 / 1829
28 / 711	78 / 1981
28 / 711	84 / 2134

PRICING

LEVELERS (L)			FOOT (F)		
IN-LINE (I)	END – RIGHT (R)	END – LEFT (L)	IN-LINE (I)	END – RIGHT (R)	END – LEFT (L)
401	401	401	541	679	541
429	429	429	568	706	568
507	507	507	646	784	646
530	530	530	669	807	669
561	561	561	701	839	701
590	590	590	730	868	730
625	625	625	764	902	764

JZSFSB
Floor Screen – EZ Fence Beam-Mounted

This screen attaches to the front of a EZ Fence Beam to provide space division and stability to the strcuture when optimal foot are chosen.

WHAT'S INCLUDED
1 solid screen, linking devices and caps (as specified), levelers or foot with covers (as specified) and mounting hardware.

WHAT'S EXCLUDED
EZ Fence Beam for Corridor, Chicago EZ Fence for Corridor and Sit and Slide Screens.

NOTES
The solid panel is 1" thick.

When In-Line (I) Configuration is specified, only Width Extension for Corner application (S) is available.

When Levelers (L) Support Style is specified, Foot Finish is **not** avalaible.

For Width Extension for Corner Application details, refer to the Application Guide.

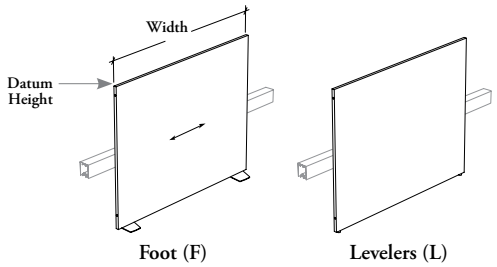

PRODUCT OPTIONS

Support Style	Datum Height	Width	Configuration	Width Extension for Corner Application	Corner Detail	Alignment Holes	Screen Finish	Foot Finish (If Applicable)
F Foot **L** Levelers	42, 51, 57	48, 54, 60, 66, 72, 78, 84	**I** In-Line **L** End – Left **R** End – Right	**O** One Side Extended **S** Standard Width	**S** Standard	**N** Without Alignment Holes **W** With Alignment Holes (Shown)	Source Laminate	Foundation Accent Mica

SAMPLE ORDER CODE

JZSFSB L	57	84	L	O	S	N	XS	

DIMENSIONS INCHES / MM

PRICING

H	W	LEVELERS (L) IN-LINE (I)	LEVELERS (L) END – RIGHT (R)	LEVELERS (L) END – LEFT (L)	FOOT (F) IN-LINE (I)	FOOT (F) END – RIGHT (R)	FOOT (F) END – LEFT (L)
42 / 1067	48 / 1219	463	463	463	602	740	602
42 / 1067	54 / 1372	500	500	500	639	777	639
42 / 1067	60 / 1524	582	582	582	722	860	722
42 / 1067	66 / 1676	615	615	615	754	892	754
42 / 1067	72 / 1829	653	653	653	792	930	792
42 / 1067	78 / 1981	689	689	689	828	966	828
42 / 1067	84 / 2134	730	730	730	869	1007	869
51 / 1295	48 / 1219	527	527	527	666	804	666
51 / 1295	54 / 1372	571	571	571	710	848	710
51 / 1295	60 / 1524	654	654	654	793	931	793
51 / 1295	66 / 1676	701	701	701	840	978	840
51 / 1295	72 / 1829	746	746	746	885	1023	885
51 / 1295	78 / 1981	788	788	788	927	1065	927
51 / 1295	84 / 2134	829	829	829	969	1107	969
57 / 1448	48 / 1219	568	568	568	708	846	708
57 / 1448	54 / 1372	617	617	617	756	894	756
57 / 1448	60 / 1524	704	704	704	843	981	843
57 / 1448	66 / 1676	757	757	757	897	1035	897
57 / 1448	72 / 1829	807	807	807	947	1085	947
57 / 1448	78 / 1981	854	854	854	993	1131	993
57 / 1448	84 / 2134	900	900	900	1039	1177	1039

J Z S F G B

Floor Screen with Glass – EZ Fence Beam-Mounted

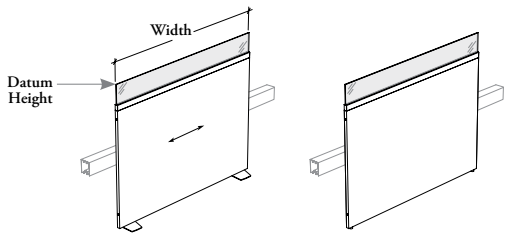

Foot (F) Levelers (L)

This screen attaches to the front of a EZ Fence Beam to provide space division and stability to the strcuture when optimal foot are chosen.

WHAT'S INCLUDED
1 solid screen with glass, linking devices and caps (as specified), levelers or foot with covers (as specified) and mounting hardware.

WHAT'S EXCLUDED
EZ Fence Beam for Corridor, Chicago EZ Fence for Corridor and Linking Strip for Glass Screen.

NOTES
The solid panel is 1" and tempered glass is 1/4" (6 mm) thick.

Frost Finishes (FT or LB) are single-sided etched, Satin (FB) is etched on both sides.

When In-Line (I) Configuration is specified, only Width Extension for Corner application (S) is available.

When Levelers (L) Support Style is specified, Foot Finish is **not** avalaible.

For Width Extension for Corner Application details, refer to the Application Guide.

PRODUCT OPTIONS

Support Style	Datum Height	Glass Starting Height	Width	Configuration	Width Extension for Corner Application
F Foot	42, 51, 57, 66	28, 42, 51	48, 54, 60, 66, 72, 78, 84	**I** In-Line	**O** One Side Extended
L Levelers				**L** End – Left	**S** Standard Width
				R End – Right	

SAMPLE ORDER CODE

JZSFGB F	51	42	84	L	O

PRODUCT OPTIONS CONTINUED

Corner Detail	Alignment Holes	Screen Finish	Glass Finish	Frame Finish	Foot Finish (If Applicable)
S Standard	**N** Without Alignment Holes	Source Laminate	**Standard Glass:** **CL** Clear	Foundation	Foundation
	W With Aligment Holes (Shown)		**FT** Frost	Mica	Mica
			FB Satin	Accent	Accent
			Low Iron Glass: **LA** Clear – Low Iron		
			LB Frost – Low Iron		

SAMPLE ORDER CODE CONTINUED

S	W	XS	LB	74	74

See Pricing on the following page.

JZSFGB

Floor Screen with Glass – EZ Fence Beam-Mounted (Continued)

DIMENSIONS INCHES / MM

PRICING

LEVELERS (L)

28" GLASS STARTING HEIGHT

IN-LINE (I)

H	W	Clear (CL)	Frost (FT)	Satin (FB)	Clear – Low Iron (LA)	Frost – Low Irow (LB)	Clear (CL)	Frost (FT)	Satin (FB)	Clear – Low Iron (LA)	Frost – Low Irow (LB)
42 / 1067	48 / 1219	762	798	923	826	855	901	937	1063	965	994
42 / 1067	54 / 1372	822	864	1003	892	930	962	1003	1143	1031	1070
42 / 1067	60 / 1524	916	965	1119	996	1035	1056	1104	1259	1136	1174
42 / 1067	66 / 1676	991	1043	1215	1076	1118	1130	1182	1354	1216	1257
42 / 1067	72 / 1829	1061	1117	1304	1154	1203	1201	1256	1443	1293	1342
42 / 1067	78 / 1981	1136	1197	1399	1235	1288	1275	1336	1538	1375	1427
42 / 1067	84 / 2134	1208	1274	1493	1318	1372	1347	1413	1632	1457	1511
51 / 1295	48 / 1219	890	954	1163	998	1046	1029	1093	1303	1137	1186
51 / 1295	54 / 1372	964	1035	1273	1083	1141	1103	1174	1412	1223	1281
51 / 1295	60 / 1524	1070	1150	1414	1201	1269	1209	1289	1553	1340	1408
51 / 1295	66 / 1676	1173	1260	1551	1319	1390	1312	1399	1690	1458	1529
51 / 1295	72 / 1829	1269	1363	1680	1426	1506	1408	1502	1819	1565	1645
51 / 1295	78 / 1981	1369	1474	1814	1542	1626	1508	1614	1953	1681	1766
51 / 1295	84 / 2134	1470	1581	1949	1654	1746	1609	1720	2088	1793	1885

END – RIGHT (R)

		Clear (CL)	Frost (FT)	Satin (FB)	Clear – Low Iron (LA)	Frost – Low Irow (LB)	Clear (CL)	Frost (FT)	Satin (FB)	Clear – Low Iron (LA)	Frost – Low Irow (LB)
42 / 1067	48 / 1219	762	798	923	826	855	1039	1075	1201	1103	1132
42 / 1067	54 / 1372	822	864	1003	892	930	1100	1141	1281	1169	1208
42 / 1067	60 / 1524	916	965	1119	996	1035	1194	1242	1397	1274	1312
42 / 1067	66 / 1676	991	1043	1215	1076	1118	1268	1320	1492	1354	1395
42 / 1067	72 / 1829	1061	1117	1304	1154	1203	1339	1394	1581	1431	1480
42 / 1067	78 / 1981	1136	1197	1399	1235	1288	1413	1474	1676	1513	1565
42 / 1067	84 / 2134	1208	1274	1493	1318	1372	1485	1551	1770	1595	1650
51 / 1295	48 / 1219	890	954	1163	998	1046	1167	1231	1441	1275	1324
51 / 1295	54 / 1372	964	1035	1273	1083	1141	1241	1312	1550	1361	1419
51 / 1295	60 / 1524	1070	1150	1414	1201	1269	1347	1427	1691	1478	1546
51 / 1295	66 / 1676	1173	1260	1551	1319	1390	1450	1537	1828	1596	1667
51 / 1295	72 / 1829	1269	1363	1680	1426	1506	1546	1640	1957	1703	1783
51 / 1295	78 / 1981	1369	1474	1814	1542	1626	1646	1752	2091	1819	1904
51 / 1295	84 / 2134	1470	1581	1949	1654	1746	1747	1858	2226	1931	2023

END – LEFT (L)

		Clear (CL)	Frost (FT)	Satin (FB)	Clear – Low Iron (LA)	Frost – Low Irow (LB)	Clear (CL)	Frost (FT)	Satin (FB)	Clear – Low Iron (LA)	Frost – Low Irow (LB)
42 / 1067	48 / 1219	762	798	923	826	855	901	937	1063	965	994
42 / 1067	54 / 1372	822	864	1003	892	930	962	1003	1143	1031	1070
42 / 1067	60 / 1524	916	965	1119	996	1035	1056	1104	1259	1136	1174
42 / 1067	66 / 1676	991	1043	1215	1076	1118	1130	1182	1354	1216	1257
42 / 1067	72 / 1829	1061	1117	1304	1154	1203	1201	1256	1443	1293	1342
42 / 1067	78 / 1981	1136	1197	1399	1235	1288	1275	1336	1538	1375	1427
42 / 1067	84 / 2134	1208	1274	1493	1318	1372	1347	1413	1632	1457	1511
51 / 1295	48 / 1219	890	954	1163	998	1046	1029	1093	1303	1137	1186
51 / 1295	54 / 1372	964	1035	1273	1083	1141	1103	1174	1412	1223	1281
51 / 1295	60 / 1524	1070	1150	1414	1201	1269	1209	1289	1553	1340	1408
51 / 1295	66 / 1676	1173	1260	1551	1319	1390	1312	1399	1690	1458	1529
51 / 1295	72 / 1829	1269	1363	1680	1426	1506	1408	1502	1819	1565	1645
51 / 1295	78 / 1981	1369	1474	1814	1542	1626	1508	1614	1953	1681	1766
51 / 1295	84 / 2134	1470	1581	1949	1654	1746	1609	1720	2088	1793	1885

Pricing is continued on the following page.

J Z S F G B

Floor Screen with Glass – EZ Fence Beam-Mounted (Continued)

DIMENSIONS
INCHES / MM

PRICING

LEVELERS (L)

42" GLASS STARTING HEIGHT

IN-LINE (I)

H	W	Clear (CL)	Frost (FT)	Satin (FB)	Clear – Low Iron (LA)	Frost – Low Irow (LB)
51 / 1295	48 / 1219	783	810	896	825	848
51 / 1295	54 / 1372	848	878	973	898	923
51 / 1295	60 / 1524	944	977	1086	999	1027
51 / 1295	66 / 1676	1015	1050	1169	1074	1104
51 / 1295	72 / 1829	1083	1122	1253	1148	1180
51 / 1295	78 / 1981	1152	1194	1333	1221	1260
51 / 1295	84 / 2134	1225	1273	1423	1303	1340
57 / 1448	48 / 1219	1014	1056	1199	1085	1123
57 / 1448	54 / 1372	1102	1152	1312	1184	1224
57 / 1448	60 / 1524	1219	1274	1453	1310	1355
57 / 1448	66 / 1676	1344	1404	1602	1442	1494
57 / 1448	72 / 1829	1465	1530	1746	1574	1626
57 / 1448	78 / 1981	1589	1659	1892	1708	1764
57 / 1448	84 / 2134	1712	1790	2039	1837	1902
66 / 1676	48 / 1219	n/a	n/a	n/a	n/a	n/a
66 / 1676	54 /1372	n/a	n/a	n/a	n/a	n/a
66 / 1676	60 / 1524	n/a	n/a	n/a	n/a	n/a
66 / 1676	66 / 1676	n/a	n/a	n/a	n/a	n/a
66 / 1676	72 / 1829	n/a	n/a	n/a	n/a	n/a
66 / 1676	78 / 1981	n/a	n/a	n/a	n/a	n/a
66 / 1676	84 / 2134	n/a	n/a	n/a	n/a	n/a

END – RIGHT (R)

		Clear (CL)	Frost (FT)	Satin (FB)	Clear – Low Iron (LA)	Frost – Low Irow (LB)
51 / 1295	48 / 1219	783	810	896	825	848
51 / 1295	54 / 1372	848	878	973	898	923
51 / 1295	60 / 1524	944	977	1086	999	1027
51 / 1295	66 / 1676	1015	1050	1169	1074	1104
51 / 1295	72 / 1829	1083	1122	1253	1148	1180
51 / 1295	78 / 1981	1152	1194	1333	1221	1260
51 / 1295	84 / 2134	1225	1273	1423	1303	1340
57 / 1448	48 / 1219	1014	1056	1199	1085	1123
57 / 1448	54 / 1372	1102	1152	1312	1184	1224
57 / 1448	60 / 1524	1219	1274	1453	1310	1355
57 / 1448	66 / 1676	1344	1404	1602	1442	1494
57 / 1448	72 / 1829	1465	1530	1746	1574	1626
57 / 1448	78 / 1981	1589	1659	1892	1708	1764
57 / 1448	84 / 2134	1712	1790	2039	1837	1902
66 / 1676	48 / 1219	n/a	n/a	n/a	n/a	n/a
66 / 1676	54 /1372	n/a	n/a	n/a	n/a	n/a
66 / 1676	60 / 1524	n/a	n/a	n/a	n/a	n/a
66 / 1676	66 / 1676	n/a	n/a	n/a	n/a	n/a
66 / 1676	72 / 1829	n/a	n/a	n/a	n/a	n/a
66 / 1676	78 / 1981	n/a	n/a	n/a	n/a	n/a
66 / 1676	84 / 2134	n/a	n/a	n/a	n/a	n/a

FOOT (F)

Clear (CL)	Frost (FT)	Satin (FB)	Clear – Low Iron (LA)	Frost – Low Irow (LB)
922	949	1035	964	987
987	1017	1112	1037	1063
1083	1116	1225	1138	1166
1154	1189	1308	1213	1244
1223	1261	1392	1288	1319
1291	1333	1472	1361	1399
1364	1412	1563	1442	1479
1153	1195	1339	1224	1262
1241	1291	1451	1324	1363
1358	1413	1593	1449	1494
1484	1543	1741	1581	1633
1604	1669	1885	1713	1766
1728	1798	2031	1847	1904
1851	1929	2178	1977	2042
1281	1350	1579	1395	1453
1383	1462	1720	1515	1574
1511	1597	1887	1653	1728
1666	1760	2078	1824	1905
1812	1915	2261	1985	2068
1962	2075	2446	2153	2242
2114	2236	2634	2313	2415

Clear (CL)	Frost (FT)	Satin (FB)	Clear – Low Iron (LA)	Frost – Low Irow (LB)
1060	1087	1173	1102	1125
1125	1155	1250	1175	1201
1221	1254	1363	1276	1304
1292	1327	1447	1351	1382
1361	1399	1530	1426	1457
1429	1471	1610	1499	1537
1502	1550	1701	1580	1617
1291	1333	1477	1362	1400
1379	1429	1589	1462	1501
1496	1551	1731	1587	1632
1622	1681	1879	1719	1771
1742	1807	2023	1851	1904
1866	1936	2169	1985	2042
1989	2067	2317	2115	2180
1419	1488	1717	1534	1592
1521	1600	1858	1653	1712
1650	1735	2025	1791	1866
1804	1898	2216	1962	2043
1950	2053	2399	2123	2206
2100	2213	2584	2291	2380
2252	2375	2772	2451	2553

Pricing is continued on the following page.

JZSFGB

Floor Screen with Glass – EZ Fence Beam-Mounted (Continued)

DIMENSIONS INCHES / MM

PRICING

		LEVELERS (L)					FOOT (F)				
		42" GLASS STARTING HEIGHT (CONTINUED)									
		END – LEFT (L)									
H	W	Clear (CL)	Frost (FT)	Satin (FB)	Clear – Low Iron (LA)	Frost – Low Irow (LB)	Clear (CL)	Frost (FT)	Satin (FB)	Clear – Low Iron (LA)	Frost – Low Irow (LB)
51 / 1295	48 / 1219	783	810	896	825	848	922	949	1035	964	987
51 / 1295	54 / 1372	848	878	973	898	923	987	1017	1112	1037	1063
51 / 1295	60 / 1524	944	977	1086	999	1027	1083	1116	1225	1138	1166
51 / 1295	66 / 1676	1015	1050	1169	1074	1104	1154	1189	1308	1213	1244
51 / 1295	72 / 1829	1083	1122	1253	1148	1180	1223	1261	1392	1288	1319
51 / 1295	78 / 1981	1152	1194	1333	1221	1260	1291	1333	1472	1361	1399
51 / 1295	84 / 2134	1225	1273	1423	1303	1340	1364	1412	1563	1442	1479
57 / 1448	48 / 1219	1014	1056	1199	1085	1123	1153	1195	1339	1224	1262
57 / 1448	54 / 1372	1102	1152	1312	1184	1224	1241	1291	1451	1324	1363
57 / 1448	60 / 1524	1219	1274	1453	1310	1355	1358	1413	1593	1449	1494
57 / 1448	66 / 1676	1344	1404	1602	1442	1494	1484	1543	1741	1581	1633
57 / 1448	72 / 1829	1465	1530	1746	1574	1626	1604	1669	1885	1713	1766
57 / 1448	78 / 1981	1589	1659	1892	1708	1764	1728	1798	2031	1847	1904
57 / 1448	84 / 2134	1712	1790	2039	1837	1902	1851	1929	2178	1977	2042
66 / 1676	48 / 1219	n/a	n/a	n/a	n/a	n/a	1281	1350	1579	1395	1453
66 / 1676	54 /1372	n/a	n/a	n/a	n/a	n/a	1383	1462	1720	1515	1574
66 / 1676	60 / 1524	n/a	n/a	n/a	n/a	n/a	1511	1597	1887	1653	1728
66 / 1676	66 / 1676	n/a	n/a	n/a	n/a	n/a	1666	1760	2078	1824	1905
66 / 1676	72 / 1829	n/a	n/a	n/a	n/a	n/a	1812	1915	2261	1985	2068
66 / 1676	78 / 1981	n/a	n/a	n/a	n/a	n/a	1962	2075	2446	2153	2242
66 / 1676	84 / 2134	n/a	n/a	n/a	n/a	n/a	2114	2236	2634	2313	2415
		51" GLASS STARTING HEIGHT									
		IN-LINE (I)									
		Clear (CL)	Frost (FT)	Satin (FB)	Clear – Low Iron (LA)	Frost – Low Irow (LB)	Clear (CL)	Frost (FT)	Satin (FB)	Clear – Low Iron (LA)	Frost – Low Irow (LB)
66 / 1676	48 / 1219	n/a	n/a	n/a	n/a	n/a	1217	1259	1402	1288	1326
66 / 1676	54 /1372	n/a	n/a	n/a	n/a	n/a	1312	1362	1522	1394	1434
66 / 1676	60 / 1524	n/a	n/a	n/a	n/a	n/a	1430	1485	1665	1521	1566
66 / 1676	66 / 1676	n/a	n/a	n/a	n/a	n/a	1569	1629	1827	1667	1719
66 / 1676	72 / 1829	n/a	n/a	n/a	n/a	n/a	1697	1762	1978	1806	1858
66 / 1676	78 / 1981	n/a	n/a	n/a	n/a	n/a	1827	1897	2130	1945	2002
66 / 1676	84 / 2134	n/a	n/a	n/a	n/a	n/a	1951	2029	2278	2076	2141
		END – RIGHT (R)									
		Clear (CL)	Frost (FT)	Satin (FB)	Clear – Low Iron (LA)	Frost – Low Irow (LB)	Clear (CL)	Frost (FT)	Satin (FB)	Clear – Low Iron (LA)	Frost – Low Irow (LB)
66 / 1676	48 / 1219	n/a	n/a	n/a	n/a	n/a	1355	1397	1540	1426	1464
66 / 1676	54 /1372	n/a	n/a	n/a	n/a	n/a	1450	1500	1660	1532	1572
66 / 1676	60 / 1524	n/a	n/a	n/a	n/a	n/a	1568	1623	1803	1659	1704
66 / 1676	66 / 1676	n/a	n/a	n/a	n/a	n/a	1708	1767	1965	1805	1857
66 / 1676	72 / 1829	n/a	n/a	n/a	n/a	n/a	1835	1900	2116	1944	1996
66 / 1676	78 / 1981	n/a	n/a	n/a	n/a	n/a	1965	2035	2268	2083	2140
66 / 1676	84 / 2134	n/a	n/a	n/a	n/a	n/a	2089	2167	2416	2214	2279

Pricing is continued on the following page.

J Z S F G B

Floor Screen with Glass – EZ Fence Beam-Mounted (Continued)

DIMENSIONS
INCHES / MM

PRICING

		LEVELERS (L)					FOOT (F)				
		51" GLASS STARTING HEIGHT (CONTINUED)									
		END – LEFT (L)									
H	W	Clear (CL)	Frost (FT)	Satin (FB)	Clear – Low Iron (LA)	Frost – Low Irow (LB)	Clear (CL)	Frost (FT)	Satin (FB)	Clear – Low Iron (LA)	Frost – Low Irow (LB)
66 / 1676	48 / 1219	n/a	n/a	n/a	n/a	n/a	1217	1259	1402	1288	1326
66 / 1676	54 /1372	n/a	n/a	n/a	n/a	n/a	1312	1362	1522	1394	1434
66 / 1676	60 / 1524	n/a	n/a	n/a	n/a	n/a	1430	1485	1665	1521	1566
66 / 1676	66 / 1676	n/a	n/a	n/a	n/a	n/a	1569	1629	1827	1667	1719
66 / 1676	72 / 1829	n/a	n/a	n/a	n/a	n/a	1697	1762	1978	1806	1858
66 / 1676	78 / 1981	n/a	n/a	n/a	n/a	n/a	1827	1897	2130	1945	2002
66 / 1676	84 / 2134	n/a	n/a	n/a	n/a	n/a	1951	2029	2278	2076	2141

J Z S F S P

Floor Screen – EZ Fence Post-Mounted

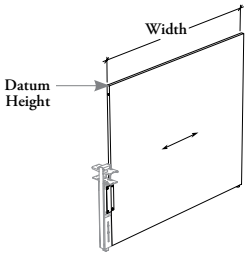

This floor screen attaches to the EZ Fence Post with Screen Connection (JZSPS) to provide space division between workstation.

WHAT'S INCLUDED
1 solid screen, levelers and mounting hardware for ez fence post.

WHAT'S EXCLUDED
EZ Fence Post with Screen Connection, EZ Fence Beam and Chicago EZ Fence Beam.

NOTES
The solid panel is 1" thick.

For Width Reduction details, refer to the Application Guide.

PRODUCT OPTIONS

Datum Height	Width	Width Reduction	Corner Detail	Screen Finish	Post Mounting Hardware Finish
42, 51, 57	24, 30, 36, 42, 48, 54, 60, 66, 72, 78, 84	**F** Full-Beam Reduction **H** Half-Beam Reduction	**R** Radius **S** Standard (Shown)	Source Laminate	Foundation Accent Mica

SAMPLE ORDER CODE

JZSFSP 57	78	H	R	XS	74

DIMENSIONS INCHES / MM

PRICING

H	W	STANDARD (S)	RADIUS (R)
42 / 1067	24 / 610	369	416
42 / 1067	30 / 762	404	455
42 / 1067	36 / 914	438	494
42 / 1067	42 / 1067	477	536
42 / 1067	48 / 1219	514	578
42 / 1067	54 / 1372	551	618
42 / 1067	60 / 1524	633	704
42 / 1067	66 / 1676	666	741
42 / 1067	72 / 1829	704	783
42 / 1067	78 / 1981	740	824
42 / 1067	84 / 2134	781	868
51 / 1295	24 / 610	403	456
51 / 1295	30 / 762	447	503
51 / 1295	36 / 914	488	550
51 / 1295	42 / 1067	531	596
51 / 1295	48 / 1219	578	647
51 / 1295	54 / 1372	622	695
51 / 1295	60 / 1524	705	782
51 / 1295	66 / 1676	752	833
51 / 1295	72 / 1829	797	882
51 / 1295	78 / 1981	839	928
51 / 1295	84 / 2134	880	973

Pricing is continued on the following page.

JZSFSP

Floor Screen – EZ Fence Post-Mounted (Continued)

DIMENSIONS INCHES / MM		PRICING	
H	W	STANDARD (S)	RADIUS (R)
57 / 1448	24 / 610	426	483
57 / 1448	30 / 762	473	535
57 / 1448	36 / 914	520	585
57 / 1448	42 / 1067	572	641
57 / 1448	48 / 1219	619	693
57 / 1448	54 / 1372	668	745
57 / 1448	60 / 1524	755	836
57 / 1448	66 / 1676	809	893
57 / 1448	72 / 1829	858	948
57 / 1448	78 / 1981	905	998
57 / 1448	84 / 2134	951	1047

J Z S F G P

Floor Screen with Glass – EZ Fence Post-Mounted

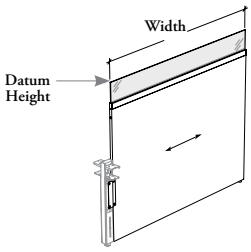

This floor screen attaches to the EZ Fence Post with Screen Connection (JZSPS) to provide space division between workstation.

WHAT'S INCLUDED
1 solid screen with glass, levelers and mounting hardware for ez fence post.

WHAT'S EXCLUDED
EZ Fence Post with Screen Connection, EZ Fence Beam and Chicago EZ Fence Beam and Linking Strip for Glass Screen.

NOTES
The solid panel is 1" and tempered glass is 1/4" (6 mm) thick.

Frost Finishes (FT or LB) are single-sided etched, Satin (FB) is etched on both sides.

For Width Reduction details, refer to the Application Guide.

PRODUCT OPTIONS

Datum Height	Glass Starting Height	Width	Width Reduction	Corner Detail	Screen Finish	Frame Finish	Glass Finish	Post Mounting Hardware Finish
42, 51, 57	28, 42	24, 30, 36, 42, 48, 54, 60, 66, 72, 78, 84	**F** Full-Beam Reduction **H** Half-Beam Reduction	**R** Radius **S** Standard (Shown)	Source Laminate	Foundation Mica Accent	**Standard Glass:** **CL** Clear **FT** Frost **FB** Satin **Low Iron Glass:** **LA** Clear – Low Iron **LB** Frost – Low Iron	Foundation Mica Accent

SAMPLE ORDER CODE

JZSFGP 51	42	84	H	S	XS	74	LB	74

DIMENSIONS
INCHES / MM

PRICING

H	W	28" GLASS STANDARD HEIGHT STANDARD (S) Clear (CL)	Frost (FT)	Satin (FB)	Clear – Low Iron (LA)	Frost – Low Irow (LB)	RADIUS (R) Clear (CL)	Frost (FT)	Satin (FB)	Clear – Low Iron (LA)	Frost – Low Irow (LB)
42 / 1067	24 / 610	575	595	658	607	624	659	679	741	690	708
42 / 1067	30 / 762	635	660	734	674	693	718	744	818	757	776
42 / 1067	36 / 914	696	725	818	745	766	780	809	901	828	849
42 / 1067	42 / 1067	754	786	897	809	836	838	870	980	892	920
42 / 1067	48 / 1219	813	849	974	877	906	897	933	1058	960	989
42 / 1067	54 / 1372	873	915	1054	943	981	957	999	1138	1027	1065
42 / 1067	60 / 1524	967	1016	1170	1047	1086	1051	1100	1254	1131	1169
42 / 1067	66 / 1676	1042	1094	1266	1128	1169	1125	1177	1349	1211	1253
42 / 1067	72 / 1829	1112	1168	1355	1205	1254	1196	1252	1438	1289	1337
42 / 1067	78 / 1981	1187	1248	1450	1286	1339	1270	1332	1534	1370	1422
42 / 1067	84 / 2134	1259	1325	1544	1369	1423	1342	1408	1627	1452	1507

Pricing is continued on the following page.

JZSFGP

Floor Screen with Glass – EZ Fence Post-Mounted (Continued)

DIMENSIONS INCHES / MM

PRICING

28" GLASS STANDARD HEIGHT (CONTINUED)

H	W	STANDARD (S) Clear (CL)	Frost (FT)	Satin (FB)	Clear – Low Iron (LA)	Frost – Low Irow (LB)	RADIUS (R) Clear (CL)	Frost (FT)	Satin (FB)	Clear – Low Iron (LA)	Frost – Low Irow (LB)
51 / 1295	24 / 610	655	687	793	709	735	739	770	877	792	819
51 / 1295	30 / 762	727	767	900	793	825	811	850	984	877	908
51 / 1295	36 / 914	798	847	1003	878	918	882	930	1087	962	1001
51 / 1295	42 / 1067	872	928	1112	965	1013	956	1012	1196	1049	1096
51 / 1295	48 / 1219	941	1005	1215	1049	1097	1024	1088	1298	1132	1181
51 / 1295	54 / 1372	1015	1086	1324	1134	1192	1099	1169	1407	1218	1276
51 / 1295	60 / 1524	1121	1201	1465	1252	1320	1204	1284	1549	1335	1404
51 / 1295	66 / 1676	1224	1311	1602	1370	1441	1307	1394	1685	1453	1524
51 / 1295	72 / 1829	1320	1414	1731	1477	1557	1404	1498	1814	1560	1640
51 / 1295	78 / 1981	1420	1525	1865	1593	1677	1503	1609	1949	1676	1761
51 / 1295	84 / 2134	1521	1632	2000	1705	1797	1604	1716	2083	1789	1880

42" GLASS STANDARD HEIGHT

		STANDARD (S) Clear (CL)	Frost (FT)	Satin (FB)	Clear – Low Iron (LA)	Frost – Low Irow (LB)	RADIUS (R) Clear (CL)	Frost (FT)	Satin (FB)	Clear – Low Iron (LA)	Frost – Low Irow (LB)
51 / 1295	24 / 610	582	593	638	606	615	666	676	722	689	698
51 / 1295	30 / 762	645	664	715	673	686	728	747	798	756	769
51 / 1295	36 / 914	709	730	793	741	759	792	813	877	825	842
51 / 1295	42 / 1067	771	796	869	810	828	855	879	952	893	912
51 / 1295	48 / 1219	834	861	947	876	899	918	944	1030	959	983
51 / 1295	54 / 1372	899	929	1024	949	974	983	1013	1108	1032	1058
51 / 1295	60 / 1524	995	1028	1137	1050	1078	1079	1111	1220	1133	1161
51 / 1295	66 / 1676	1066	1101	1220	1125	1155	1150	1184	1304	1209	1239
51 / 1295	72 / 1829	1134	1173	1304	1199	1231	1218	1256	1387	1283	1314
51 / 1295	78 / 1981	1203	1245	1384	1273	1311	1286	1328	1467	1356	1394
51 / 1295	84 / 2134	1276	1324	1474	1354	1391	1360	1407	1558	1437	1474
57 / 1448	24 / 610	727	751	820	762	782	811	834	904	846	865
57 / 1448	30 / 762	814	842	933	862	882	898	926	1016	945	965
57 / 1448	36 / 914	899	931	1041	954	981	983	1015	1124	1037	1065
57 / 1448	42 / 1067	984	1022	1148	1047	1078	1067	1105	1232	1131	1161
57 / 1448	48 / 1219	1065	1107	1250	1136	1174	1148	1190	1334	1219	1257
57 / 1448	54 / 1372	1153	1203	1363	1235	1275	1237	1286	1447	1319	1358
57 / 1448	60 / 1524	1270	1325	1505	1361	1406	1354	1408	1588	1444	1489
57 / 1448	66 / 1676	1395	1455	1653	1493	1545	1479	1538	1737	1576	1629
57 / 1448	72 / 1829	1516	1581	1797	1625	1677	1600	1665	1880	1709	1761
57 / 1448	78 / 1981	1640	1710	1943	1759	1815	1724	1793	2027	1842	1899
57 / 1448	84 / 2134	1763	1841	2090	1888	1953	1847	1924	2174	1972	2037

J Z S F O P

Floor Screen with Metal Tower – Open – EZ Fence Post-Mounted

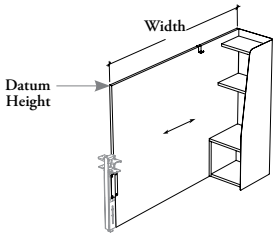

No Accessory (N)

This Floor Screen with Metal Tower attaches to the EZ Fence Post with Screen Connection (JZSPS) and provides space division and storage area to store garments and other items in the workstation.

WHAT'S INCLUDED
1 solid screen with metal tower, 2 fixe shelves, 1 hook, 1 cable pass-through ring (as specified), linking devices and caps (as specified), levelers and mounting hardware.

WHAT'S EXCLUDED
EZ Fence Post with Screen Connection, EZ Fence Beam, Chicago EZ Fence Beam, Pass-Through Cover and Rare Earth Magnets Kit.

NOTES
The solid panel is 1" thick.

For Width Reduction details, refer to the Application Guide.

PRODUCT OPTIONS

Configuration	Datum Height	Width	Width Reduction	Accessory	Screen Finish	Metal Tower Finish	Hook Finish	Post Mounting Hardware Finish
L Left	51, 57	66, 72, 78, 84	**F** Full-Beam Reduction	**N** No Accessory	Source Laminate	Foundation	Foundation	Foundation
R Right (Shown)			**H** Half-Beam Reduction			Accent	Accent	Accent
						Mica	Mica	Mica

SAMPLE ORDER CODE

JZSFOP L	57	78	H	N	XS	74	74	74

DIMENSIONS INCHES / MM

H	W	PRICING
51 / 1295	66 / 1676	2039
51 / 1295	72 / 1829	2085
51 / 1295	78 / 1981	2126
51 / 1295	84 / 2134	2168
57 / 1448	66 / 1676	2159
57 / 1448	72 / 1829	2209
57 / 1448	78 / 1981	2255
57 / 1448	84 / 2134	2301

J Z S F D P

Floor Screen with Metal Tower – One Drawer – EZ Fence Post-Mounted

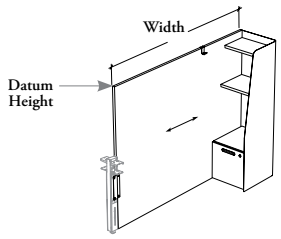

This Floor Screen with Metal Tower attaches to the EZ Fence Post with Screen Connection (JZSPS) and provides space division and storage area to store garments and other items combined with optional filing or recycling/waste bins section.

WHAT'S INCLUDED
1 solid screen with metal tower, 2 fixe shelves, 1 hook, 1 file drawer or recycling/waste bin (as specified), 1 pull (as specified), 1 cable pass-through ring (as specified), 1 12" hanging file bar, linking devices and caps (as specified), levelers and mounting hardware.

WHAT'S EXCLUDED
EZ Fence Post with Screen Connection, EZ Fence Beam, Chicago EZ Fence Beam, Pass-Through Cover and Rare Earth Magnets Kit.

NOTES
The solid panel is 1" thick.

When Recycling/Waste Bin (R) option is specified, Drawer Key Style is **not** available.

For Width Reduction details, refer to the Application Guide.

Included hanging file bar is to be installed along the width only.

PRODUCT OPTIONS

Front Style	Configuration	Datum Height	Width	Width Reduction	Storage Configuration
T Solid with Pull	**L** Left	51, 57	66, 72, 78, 84	**F** Full-Beam Reduction	**F** File Drawer
	R Right (Shown)			**H** Half-Beam Reduction	**R** Recycling/Waste Bin

SAMPLE ORDER CODE

JZSFDP T	L	57	84	H	R

PRODUCT OPTIONS CONTINUED

Pull Style	Pull and Hook Finish	Screen Finish	Metal Tower Finish	Post Mounting Hardware Finish	Drawer Key Style (If Applicable)
C Cityline Recessed	Foundation	Source Laminate	Foundation	Foundation	**K** Keyed Alike
	Mica		Mica	Mica	**R** Keyed Randomly
	Accent		Accent	Accent	**N** No Lock

SAMPLE ORDER CODE CONTINUED

C	74	XS	74	74	

See Pricing on the following page.

JZSFDP

Floor Screen with Metal Tower – One Drawer – EZ Fence Post-Mounted (Continued)

DIMENSIONS INCHES / MM		PRICING	
H	W	RECYCLING/WASTE BIN (R)	FILE DRAWER (F)
51 / 1295	66 / 1676	2341	2365
51 / 1295	72 / 1829	2386	2410
51 / 1295	78 / 1981	2428	2452
51 / 1295	84 / 2134	2470	2494
57 / 1448	66 / 1676	2426	2450
57 / 1448	72 / 1829	2475	2500
57 / 1448	78 / 1981	2522	2546
57 / 1448	84 / 2134	2568	2593

J Z S F T P

Floor Screen with Metal Tower – Two Drawers – EZ Fence Post-Mounted

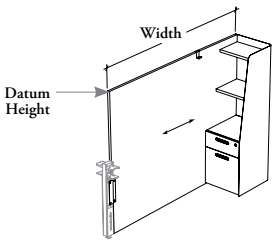

This Floor Screen with Metal Tower attaches to the EZ Fence Post with Screen Connection (JZSPS) and provides space division and storage area to store garments and other items combined with optional filing or recycling/waste bins section.

WHAT'S INCLUDED
1 solid screen with metal tower, 2 fixe shelves, 1 hook, 1 file drawer or recycling/waste bin (as specified), 2 pulls (as specified), 1 cable pass-through ring (as specified), 1 pencil tray, 1 drawer divider, 1 12" hanging file bar, linking devices and caps (as specified), levelers and mounting hardware.

WHAT'S EXCLUDED
EZ Fence Post with Screen Connection, EZ Fence Beam, Chicago EZ Fence Beam, Pass-Through Cover and Rare Earth Magnet Kit.

NOTES
The solid panel is 1" thick.

When Recycling/Waste Bin (R) option is specified, only the Box Drawer can be lockable.

Storage unit has a central locking system for File Drawer (F) only.

For Width Reduction details, refer to the Application Guide.

Included hanging file bar is to be installed along the width only.

PRODUCT OPTIONS

Front Style	Configuration	Datum Height	Width	Width Reduction	Lower Storage Configuration
T Solid with Pull	**L** Left	51, 57	66, 72, 78, 84	**F** Full-Beam Reduction	**F** File Drawer
	R Right (Shown)			**H** Half-Beam Reduction	**R** Recycling/Waste Bin

SAMPLE ORDER CODE

JZSFTP T	L	51	78	H	R

PRODUCT OPTIONS CONTINUED

Pull Style	Pull and Hook Finish	Screen Finish	Metal Tower Finish	Post Mounting Hardware Finish	Drawer Key Style (If Applicable)
C Cityline Recessed	Foundation	Source Laminate	Foundation	Foundation	**K** Keyed Alike
	Mica		Mica	Mica	**R** Keyed Randomly
	Accent		Accent	Accent	**N** No Lock

SAMPLE ORDER CODE CONTINUED

C	74	XS	74	74	

See Pricing on the following page.

JZSFTP

Floor Screen with Metal Tower – Two Drawers – EZ Fence Post-Mounted (Continued)

DIMENSIONS INCHES / MM		PRICING	
H	W	RECYCLING/WASTE BIN (R)	FILE DRAWER (F)
51 / 1295	66 / 1676	2471	2508
51 / 1295	72 / 1829	2516	2553
51 / 1295	78 / 1981	2558	2595
51 / 1295	84 / 2134	2600	2637
57 / 1448	66 / 1676	2555	2593
57 / 1448	72 / 1829	2605	2642
57 / 1448	78 / 1981	2652	2689
57 / 1448	84 / 2134	2698	2735

ez suspended storage

ez suspended storage product map

J Z B S O EZ Suspended Credenza – Lateral File and Cubby – Shared

Page 920

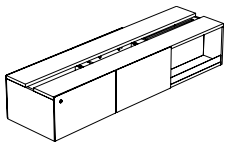

J Z B D O EZ Off-Module Suspended Credenza – Lateral File and Cubby – Shared

Page 922

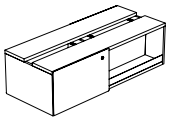

J Z B F F EZ Suspended Credenza – Lateral File – Single-Sided

Page 924

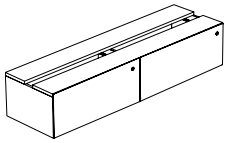

J Z B S M EZ Suspended Credenza – Media Center – Single-Sided

Page 926

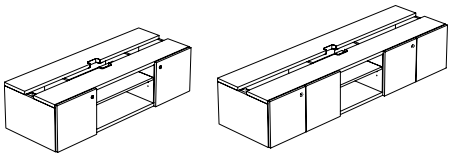

J Z B S H EZ Suspended Shelf – Solid

Page 928

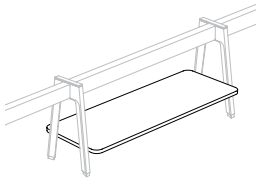

J Z B S O

EZ Suspended Credenza – Lateral File and Cubby – Shared

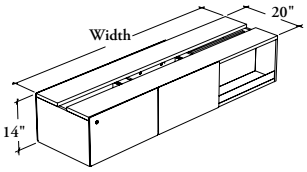

This suspended credenza must be installed on-module under a EZ Fence Beam to provide share filling and casual open storage to both sides of the fence.

WHAT'S INCLUDED

1 ez suspended credenza, 2 drawers, 2 bag holders, mounting hardware, lock and keys (as specified) and accessories as listed below:

	Widths		
	60"	66" to 84"	
Cable Management	1	2	
12" Hanging File Bar	1	n/a	per drawer
15" Hanging File Bar	n/a	1	per drawer

WHAT'S EXCLUDED

EZ Fence Beam, Chicago EZ Fence Beam and File Drawer Organizer.

NOTES

When Front Style (M or N) is specified, only Metal Front Finish is available.

When Front Style (S or T) is specified, only Laminate Front Finish is available.

When Front Style (M or S) is specified, Pull Style and Pull and Bag Holder Finish are **not** available.

When Front Style (N or T) is specified, Bag Holder Finish are **not** available.

PRODUCT OPTIONS

Front Style	EZ Fence Leg Style	Case Height	Depth	Width	Orientation	Front Finish
M Metal	**A** Angled	14	20	60, 66, 72, 78, 84	**L** Drawer on Left (Shown)	**Metal Front:** Foundation
N Metal with Pull					**R** Drawer on Right	Accent
S Solid						Mica
T Solid with Pull						**Laminate Front:** Source Laminate
						Foundation Laminate

SAMPLE ORDER CODE

JZBSO S	A	14	20	72	L	3D

PRODUCT OPTIONS CONTINUED

Edge Trim Finish (Laminate Front Only)	Case Finish	Pull Style (If Applicable)	Pull and Bag Holder Finish (If Applicable)	Bag Holder Finish (If Applicable)	Leg Mounting Hardware Finish	Key Style
Edge Trim Colors	Source Laminate	**C** Cityline Recessed	Foundation	Foundation	Foundation	**K** Keyed Alike
			Mica	Mica	Mica	**R** Keyed Randomly
			Accent	Accent	Accent	**N** No Lock

SAMPLE ORDER CODE CONTINUED

4D	3D			60	60	R

See Pricing on the following page.

JZBSO

EZ Suspended Credenza – Lateral File and Cubby – Shared (Continued)

DIMENSIONS INCHES / MM			PRICING		
			METAL FRONT (M) or METAL FRONT WITH PULL (N)	SOLID FRONT (S) or SOLID FRONT WITH PULL (T)	
H	D	W		Source Laminate	Foundation Laminate
14 / 356	20 / 508	60 / 1524	2558	2558	2601
14 / 356	20 / 508	66 / 1676	2605	2605	2659
14 / 356	20 / 508	72 / 1829	2653	2653	2717
14 / 356	20 / 508	78 / 1981	2702	2702	2777
14 / 356	20 / 508	84 / 2134	2749	2749	2835

J Z B D O

EZ Off-Module Suspended Credenza – Lateral File and Cubby – Shared

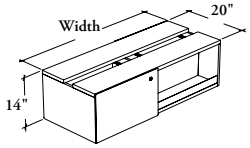

This off-module suspended credenza must be installed off-module under a EZ Fence Beam to provide share filling and casual open storage to both sides of the fence.

WHAT'S INCLUDED
1 ez off-module suspended credenza, 2 drawers, 2 bag holders, 1 12" hanging file bar (per drawer), mounting hardware, lock and keys (as specified).

WHAT'S EXCLUDED
EZ Fence Beam, Chicago EZ Fence Beam and File Drawer Organizer.

NOTES
When Front Style (M or N) is specified, only Metal Front Finish is available.

When Front Style (S or T) is specified, only Laminate Front Finish is available.

When Front Style (M or S) is specified, Pull Style and Pull and Bag Holder Finish are **not** available.

When Front Style (N or T) is specified, Bag Holder Finish are **not** available.

PRODUCT OPTIONS

Front Style	EZ Fence Leg Style	Case Height	Depth	Width	Orientation	Front Finish
M Metal	**A** Angled	14	20	36, 42, 48	**L** Drawer on Left (Shown)	**Metal Front:** Foundation
N Metal with Pull					**R** Drawer on Right	Accent
S Solid						Mica
T Solid with Pull						**Laminate Front:** Source Laminate
						Foundation Laminate

SAMPLE ORDER CODE

JZBDO S	A	14	20	72	L	3D

PRODUCT OPTIONS CONTINUED

Edge Trim Finish (Laminate Front Only)	Case Finish	Pull Style (If Applicable)	Pull and Bag Holder Finish (If Applicable)	Bag Holder Finish (If Applicable)	Leg Mounting Hardware Finish	Key Style
Edge Trim Colors	Source Laminate	**C** Cityline Recessed	Foundation	Foundation	Foundation	**K** Keyed Alike
			Mica	Mica	Mica	**R** Keyed Randomly
			Accent	Accent	Accent	**N** No Lock

SAMPLE ORDER CODE CONTINUED

4D	3D			60	60	R

See Pricing on the following page.

JZBDO

EZ Off-Module Suspended Credenza – Lateral File and Cubby – Shared (Continued)

DIMENSIONS INCHES / MM			PRICING		
			METAL FRONT (M) or METAL FRONT WITH PULL (N)	SOLID FRONT (S) or SOLID FRONT WITH PULL (T)	
H	D	W		Source Laminate	Foundation Laminate
14 / 356	20 / 508	36 / 914	2247	2247	2308
14 / 356	20 / 508	42 / 1067	2288	2288	2358
14 / 356	20 / 508	48 / 1219	2327	2327	2407

J Z B F F

EZ Suspended Credenza – Lateral File – Single-Sided

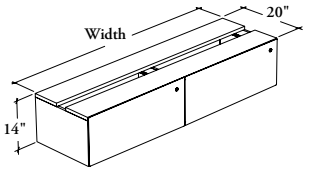

This suspended credenza must be installed on-module under a EZ Fence Beam to provide high density filling and organized storage on a single-sided application.

WHAT'S INCLUDED
1 ez suspended credenza, 2 drawers, mounting hardware, lock and keys (as specified) and accessories as listed below:

	Widths		
	48" or 54"	60" to 72"	
15" Hanging File Bar	1	2	per drawer

WHAT'S EXCLUDED
EZ Fence Beam, Chicago EZ Fence Beam and File Drawer Organizer.

NOTES
When Front Style (M or N) is specified, only Metal Front Finish is available.

When Front Style (S or T) is specified, only Laminate Front Finish is available.

When Front Style (M or S) is specified, Pull Style and Pull and Bag Holder Finish are **not** available.

PRODUCT OPTIONS

Front Style	EZ Fence Leg Style	Case Height	Depth	Width	Front Finish
M Metal	**A** Angled	14	20	48, 54, 60, 66, 72	**Metal Front:** Foundation
N Metal with Pull					Accent
S Solid					Mica
T Solid with Pull					**Laminate Front:** Source Laminate
					Foundation Laminate

SAMPLE ORDER CODE

JZBFF S	A	14	20	72	3D

PRODUCT OPTIONS CONTINUED

Edge Trim Finish (Laminate Front Only)	Case Finish	Pull Style (If Applicable)	Pull Finish (If Applicable)	Leg Mounting Hardware Finish	Key Style
Edge Trim Colors	Source Laminate	**C** Cityline Recessed	Foundation	Foundation	**K** Keyed Alike
			Mica	Mica	**R** Keyed Randomly
			Accent	Accent	**N** No Lock

SAMPLE ORDER CODE CONTINUED

4D	3D			60	R

See Pricing on the following page.

J Z B F F

EZ Suspended Credenza – Lateral File – Single-Sided (Continued)

DIMENSIONS INCHES / MM			PRICING		
			METAL FRONT (M) or METAL FRONT WITH PULL (N)	SOLID FRONT (S) or SOLID FRONT WITH PULL (T)	
H	D	W		Source Laminate	Foundation Laminate
14 / 356	20 / 508	48 / 1219	2279	2279	2359
14 / 356	20 / 508	54 / 1372	2311	2311	2400
14 / 356	20 / 508	60 / 1524	2342	2342	2442
14 / 356	20 / 508	66 / 1676	2373	2373	2482
14 / 356	20 / 508	72 / 1829	2405	2405	2524

J Z B S M

EZ Suspended Credenza – Media Center – Single-Sided

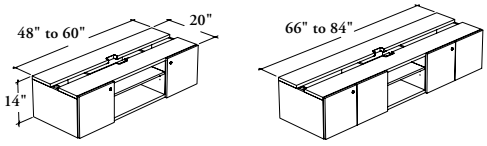

This suspended credenza installed on-module under a double-sided EZ Fence Structure is ideal to create a single-sided media center in combination with Lift and Drop Media Tile – Solid (JZTSM) It also is designed to manage media devices and there cables to the monitor. Hinged door sections offer the possibility to manage a base feed and data cables coming from floor.

WHAT'S INCLUDED
1 ez suspended credenza with media center, 2 pass through metal rings, 2 grommets (inside), 1 vertical manager, mounting bracket and hardware.

WHAT'S EXCLUDED
EZ Fence Beam, Chicago EZ Fence Beam and Lift and Drop Media Tile – Solid.

PRODUCT OPTIONS

Front Style	EZ Fence Leg Style	Case Height	Depth	Width
S Solid	**A** Angled	14	20	48, 54, 60, 66, 72, 78, 84

SAMPLE ORDER CODE

JZBSM S	A	14	20	72

PRODUCT OPTIONS CONTINUED

Door Finish	Edge Trim Finish	Case Finish	Pass-Through and Leg Mounting Hardware Finish	Key Style
Source Laminate	Edge Trim Colors	Source Laminate	Foundation	**K** Keyed Alike
Foundation Laminate			Mica	**R** Keyed Randomly
			Accent	**N** No Lock

SAMPLE ORDER CODE CONTINUED

3D	4D	3D	60	R

See Pricing on the following page.

J Z B S M

EZ Suspended Credenza – Media Center – Single-Sided (Continued)

DIMENSIONS INCHES / MM

PRICING

H	D	W	SOLID FRONT (S) Source Laminate	SOLID FRONT (S) Foundation Laminate
14 / 356	20 / 508	48 / 1219	1651	1731
14 / 356	20 / 508	54 / 1372	1669	1759
14 / 356	20 / 508	60 / 1524	1688	1788
14 / 356	20 / 508	66 / 1676	1706	1815
14 / 356	20 / 508	72 / 1829	1725	1844
14 / 356	20 / 508	78 / 1981	1743	1873
14 / 356	20 / 508	84 / 2134	1762	1902

J Z B S H
EZ Suspended Shelf – Solid

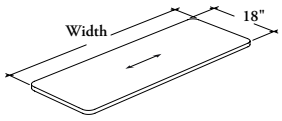

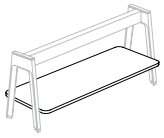

This shelf provides a convenient storage space below the EZ Fence Beam.

WHAT'S INCLUDED
1 ez suspended shelf, reinforcing bar (when required) and mounting hardware.

WHAT'S EXCLUDED
EZ Fence Beam, Chicago EZ Fence Beam and EZ Fence Legs.

NOTES
Specify the width according to the width of the EZ Fence Beam under which the shelf is installed.

Can be mounted only on EZ Fence Leg (JZSFS).

Comes with curved corner only.

PRODUCT OPTIONS

Depth	Width	Finish	Leg Mounted Hardware Finish
18	48, 54, 60, 66, 72, 84	Source Laminate	Foundation Mica Accent

SAMPLE ORDER CODE

JZBSH 18	**48**	**3D**	**60**

DIMENSIONS
INCHES / MM

D	W
18 / 457	48 / 1219
18 / 457	54 / 1372
18 / 457	60 / 1524
18 / 457	66 / 1676
18 / 457	72 / 1829
18 / 457	78 / 1981
18 / 457	84 / 2134

PRICING

336
363
391
416
443
471
501

desk structures

desk structures product map

J N D B B Structural Beam

Page 934

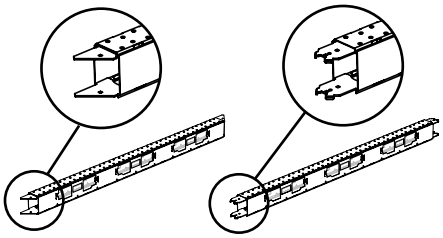

J N D C B Chicago Structural Beam

Page 935

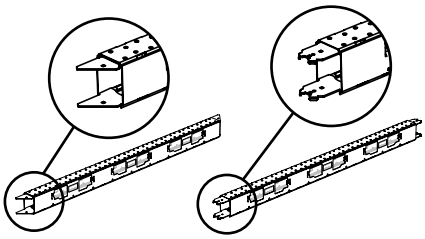

J N D P U Structural Post

Page 936

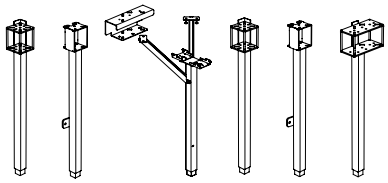

J N D P Y Structural Post – 120°

Page 937

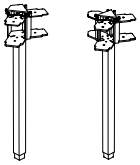

J N D P L Y Low Structural Post – 120°

Page 938

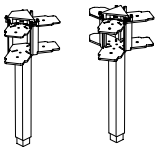

J N D P F Structural Post with Front Leg

Page 939

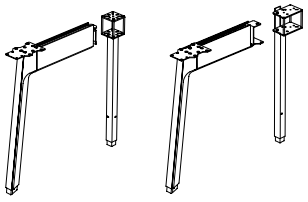

J N D L S Structural Leg – Single-Sided

Page 940

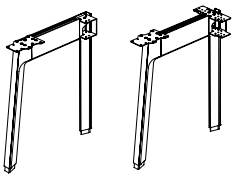

J N D L D Structural Leg – Double-Sided

Page 942

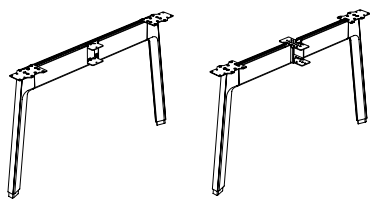

desk structures product map

J N D L F Structural Leg – Fence

Page 944

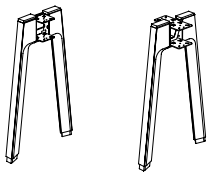

J N D L L Structural Leg – Beam-Mounted Cabinet

Page 945

J N D L P Structural Leg – Peninsula

Page 946

J N D L L F Low Structural Leg – Fence

Page 947

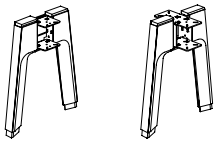

J N D B C S Structural Beam Cover – Side

Page 948

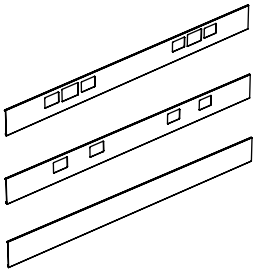

J N D B T C Structural Beam Cover – Top

Page 949

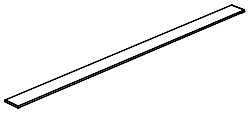

J N D B C B Bottom Wire Cover for Structural Beam – Standard

Page 950

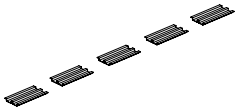

J N D B K Bottom Kit for Structural Beam

Page 951

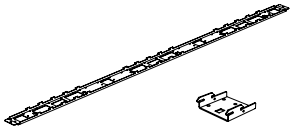

desk structures product map

J N D S W B Wall Anchored Stabilizer for Structure

Page 952

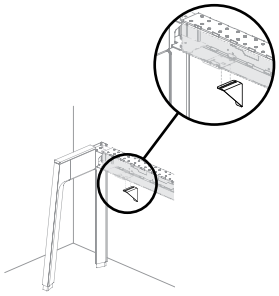

J N D S T Table Attached Stabilizer for Structure

Page 953

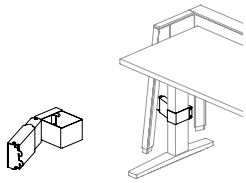

J N D B S Bench Stabilizer

Page 954

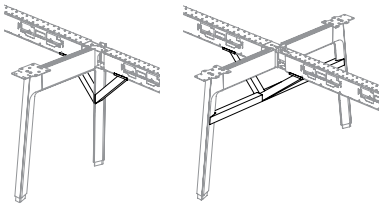

J N D C P T Structural Post Cover – Top

Page 955

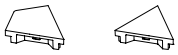

J N D L C Structural Leg Cover – Top

Page 956

J N D L W Structural Leg Bracket for Worksurface

Page 957

J N D B B
Structural Beam

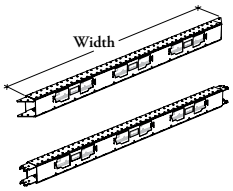

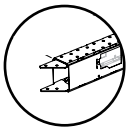

Single-Sided – Standard (S)

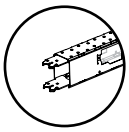

Double-Sided – Standard (D)

The Structural Beam is a key structural element of the product providing horizontal support for worksurfaces, screens, storage, etc. It also carries electricity and data cabling across workstations.

WHAT'S INCLUDED
1 single-sided or double-sided structural beam, facing down brackets, mounting hardware and cut-outs listed below:

	Width			
	24"	30" to 42"	48" to 60"	66" to 84"
Power Cut-Out	n/a	1	2	3
Data Cut-Out	1	1	2	3

WHAT'S EXCLUDED
Supports and Structural Beam Covers.

NOTES
Refer to application guide.

PRODUCT OPTIONS

Width	Configuration	Worksurface Bracket	Finish
24, 30, 36, 42, 48, 54, 60, 66, 72, 78, 84	**D** Double-Sided – Standard **S** Single-Sided – Standard	**N** No Worksurface Brackets **W** With Worksurface Brackets	Foundation Mica Accent

SAMPLE ORDER CODE

JNDBB 66	D	N	74

DIMENSIONS
INCHES / MM

PRICING

W	NO WORKSURFACE BRACKETS (N)	WITH WORKSURFACE BRACKETS (W)
24 / 610	198	212
30 / 762	204	222
36 / 914	210	230
42 / 1067	217	235
48 / 1219	226	242
54 / 1372	233	249
60 / 1524	241	259
66 / 1676	248	284
72 / 1829	256	290
78 / 1981	262	297
84 / 2134	270	303

JNDCB
Chicago Structural Beam

The Chicago Structural Beam is a key structural element of the product providing horizontal support for worksurfaces, screens, storage, etc. It also carries electricity and data cabling across workstations.

WHAT'S INCLUDED
1 single-sided or double-sided chicago structural beam, facing down brackets, mounting hardware and cut-outs listed below:

	Width			
	24"	30" to 42"	48" to 60"	66" to 84"
Power Cut-Out	n/a	1	2	3
Data Cut-Out	1	1	2	3

WHAT'S EXCLUDED
Supports and Structural Beam Covers.

NOTES
Refer to application guide.

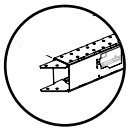
Single-Sided – Standard (S)

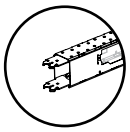
Double-Sided – Standard (D)

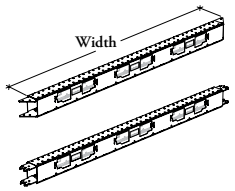

PRODUCT OPTIONS

Width	Configuration	Worksurface Bracket	Finish
24, 30, 36, 42, 48, 54, 60, 66, 72, 78, 84	**D** Double-Sided – Standard **S** Single-Sided – Standard	**N** No Worksurface Brackets **W** With Worksurface Brackets	Foundation Mica Accent

SAMPLE ORDER CODE

JNDCB 24	D	N	74

DIMENSIONS
INCHES / MM

PRICING

W	NO WORKSURFACE BRACKETS (N)	WITH WORKSURFACE BRACKETS (W)
24 / 610	198	212
30 / 762	204	222
36 / 914	210	230
42 / 1067	217	235
48 / 1219	226	242
54 / 1372	233	249
60 / 1524	241	259
66 / 1676	248	284
72 / 1829	256	290
78 / 1981	262	297
84 / 2134	270	303

J N D P U
Structural Post

The Structural Posts are used to support and connect structural beams at various configurations.

WHAT'S INCLUDED
1 post, 1 leveler, 1 leveler cover and mounting hardware.

NOTES
Post height is 29" from the finished floor to the top of the finished worksurface or 28" from finished floor to the top cover of the desk structure with a leveling range of 3".

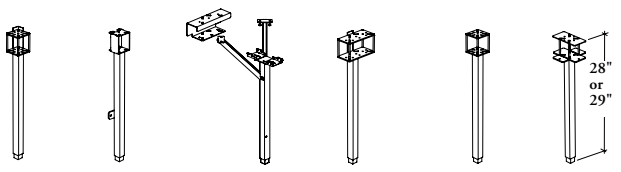

Corner (C) | **End – Storage (E)** | **Recessed with Long Span Kit (R)** | **In-Line – Single-Sided Beam (T)** | **In-Line – Double-Sided Beam (X)** | **Four Way Exposed – Double-Sided Beam (Z)**

PRODUCT OPTIONS

Configuration	Storage Bracket	Finish
C Corner	**N** No Storage Brackets (Shown)	Foundation
E End – Storage	**W** With Storage Brackets	Mica
R Recessed with Long Span Kit		Accent
T In-Line – Single-Sided Beam		
X In-Line – Double-Sided Beam		
Z Four-Way Exposed – Double-Sided Beam		

SAMPLE ORDER CODE

JNDPU T	N	74

CONFIGURATION

PRICING

	NO STORAGE BRACKETS (N)	WITH STORAGE BRACKETS (W)
C	201	n/a
E	n/a	241
R	499	n/a
T	205	438
X	195	407
Z	205	n/a

JNDPY
Structural Post – 120°

The Structural Posts are used to support and connect structural beams at 120° configurations.

WHAT'S INCLUDED
1 two- or three-way post (as specified), 1 top cover, 1 leveler, 1 leveler cover and mounting hardware.

NOTES
Post height is 28" from the finished floor to the top cover of the desk structure with a leveling range of 3".

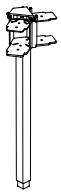

Two-Way –
Double-Sided Beam (V)

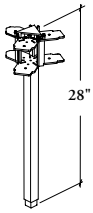

Three-Way –
Double-Sided Beam (Y)

PRODUCT OPTIONS

Configuration	Top Option	Finish	Top Cover Finish
V Two-Way – Double-Sided Beam	**C** Top Cover	Foundation	Foundation
Y Three-Way – Double-Sided Beam		Mica	Mica
		Accent	Accent

SAMPLE ORDER CODE

JNDPY V	C	83	74

PRICING

254

JNDPLY
Low Structural Post – 120°

Two-Way –
Double-Sided Beam (V)

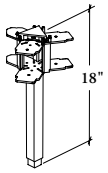

Three-Way –
Double-Sided Beam (Y)

The Low Structural Posts are used to support and connect structural beams at 120° configurations.

WHAT'S INCLUDED
1 two- or three-way post (as specified), 1 top cover, 1 leveler, 1 leveler cover and mounting hardware.

NOTES
Post height is 18" from the finished floor to the top cover of the desk structure with a leveling range of 3".

PRODUCT OPTIONS

Configuration	Top Option	Finish	Top Cover Finish
V Two-Way – Double-Sided Beam	**C** Top Cover	Foundation	Foundation
Y Three-Way – Double-Sided Beam		Mica	Mica
		Accent	Accent

SAMPLE ORDER CODE

JNDPLY V	**C**	**83**	**74**

PRICING

211

JNDPF
Structural Post with Front Leg

These supports are used to connect and support 2 or 3 structural beams at various configurations to create workstation application.

WHAT'S INCLUDED
1 front Leg, 1 end or in-line post (as specified), 2 levelers, 2 leveler covers, 1 top cover (if specified), slotted groove trim and mounting hardware.

NOTES
Post with Front Leg height is 29" from the finished floor to the top of the finished worksurface with a leveling range of 3".

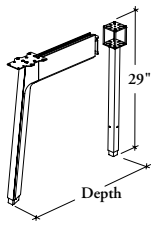

In-Line – Double-Sided Beam (I)

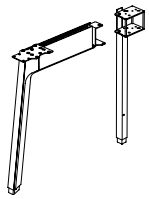
End – Left (L) or End – Right (R)

PRODUCT OPTIONS

Support Style	Depth	Configuration	Top Option (Leg)	Finish
A Angled	18, 24, 30	**I** In-Line – Double-Sided Beam (Shown) **L** End – Left (Shown) **R** End – Right	**C** Top Cover **W** Worksurface Bracket (Shown)	Foundation Mica Accent

SAMPLE ORDER CODE

JNDPF A	24	L	W	74

DIMENSIONS INCHES / MM

PRICING

D	END – LEFT OR RIGHT (L or R) WORKSURFACE BRACKET (W)	END – LEFT OR RIGHT (L or R) TOP COVER (C)
18 / 457	501	527
24 / 610	521	559
30 / 762	536	n/a

	IN-LINE – DOUBLE-SIDED BEAM (I)	
18 / 457	506	531
24 / 610	524	563
30 / 762	543	n/a

J N D L S
Structural Leg – Single-Sided

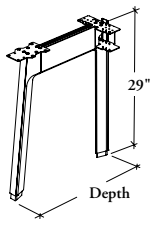

In-Line (I)

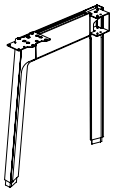

End – Left (L) or
End – Right (R)

These supports are used to connect and support the structural beams in linear configuration to create workstation application.

WHAT'S INCLUDED
1 leg (as specified), 2 levelers, 2 leveler covers, 1 top cover (if specified), slotted groove trims and mounting hardware.

NOTES
Leg height is 29" from the finished floor to the top of the finished worksurface with a leveling range of 3".

PRODUCT OPTIONS

Support Style	Depth	Configuration	Top Option	Finish
A Angled	18, 24, 30	**I** In-Line (Shown)	**C** Top Cover	Foundation
		L End – Left (Shown)	**W** Worksurface Bracket (Shown)	Mica
		R End – Right		Accent

SAMPLE ORDER CODE

JNDLS A	24	I	W	74

DIMENSIONS
INCHES / MM

PRICING

D	END – LEFT OR RIGHT (L or R) WORKSURFACE BRACKET (W)	END – LEFT OR RIGHT (L or R) TOP COVER (C)
18 / 457	532	558
24 / 610	550	588
30 / 762	568	n/a
	IN-LINE (I)	
18 / 457	585	610
24 / 610	601	641
30 / 762	621	n/a

J N D L D
Structural Leg – Double-Sided

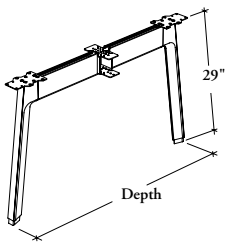

In-Line (I)

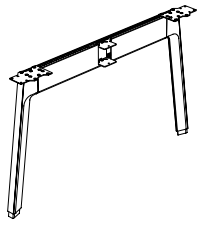

End (E)

These supports are used to connect and support the structural beams in linear configuration to create workstation application.

WHAT'S INCLUDED
1 leg (as specified), 2 levelers, 2 leveler covers, 2 top covers (if specified), slotted groove trims and mounting hardware.

NOTES
Leg height is 29" from the finished floor to the top of the finished worksurface with a leveling range of 3".

PRODUCT OPTIONS

Support Style	Depth	Configuration	Top Option	Finish
A Angled	24, 36, 48, 60	**E** End **I** In-Line	**C** Top Cover **W** Worksurface Bracket (Shown) **X** Combo Worksurface & Top Cover	Foundation Mica Accent

SAMPLE ORDER CODE

JNDLD A	48	E	W	74

DIMENSIONS
INCHES / MM

PRICING

D	IN-LINE (I) WORKSURFACE BRACKET (W)	IN-LINE (I) COMBO WORKSURFACE & TOP COVER (X)
24 / 610	585	n/a
36 / 914	621	660
48 / 1219	655	698
60 / 1524	688	n/a

D	IN-LINE (I) TOP COVER (C)
24 / 610	n/a
36 / 914	701
48 / 1219	735
60 / 1524	n/a

Pricing is continued on the following page.

JNDLD
Structural Leg – Double-Sided (Continued)

DIMENSIONS INCHES / MM	PRICING	
	END (E)	
D	WORKSURFACE BRACKET (W)	COMBO WORKSURFACE & TOP COVER (X)
24 / 610	n/a	n/a
36 / 914	601	624
48 / 1219	638	676
60 / 1524	673	n/a

	TOP COVER (C)
24 / 610	n/a
36 / 914	650
48 / 1219	715
60 / 1524	n/a

J N D L F
Structural Leg – Fence

These supports are used to connect and support the structural beams at various configurations to create fence application.

WHAT'S INCLUDED
1 leg (as specified), 2 top covers (if specified), 2 levelers, 2 leveler covers, slotted groove trims and mounting hardware.

NOTES
Cannot support any Leg-Mounted Screen.

Can be used in fence application only.

Leg height is 29" from the finished floor to the top of the finished worksurface with a leveling range of 3".

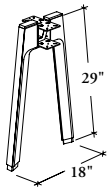

In-Line (I)

End (E)

PRODUCT OPTIONS

Support Style	Depth	Configuration	Top Option	Finish
A Angled	18	**E** End	**C** Top Cover	Foundation
		I In-Line		Mica
				Accent

SAMPLE ORDER CODE

JNDLF A	18	E	C	74

DIMENSIONS
INCHES / MM

D
18 / 457

PRICING

END (E)	IN-LINE (I)
494	543

JNDLL
Structural Leg – Beam-Mounted Cabinet

This Structural Leg is used to connect and support the structural beam with a Beam-Mounted Cabinet in workstation application.

WHAT'S INCLUDED
1 leg, 2 levelers, 2 leveler covers, slotted groove trims and mounting hardware.

NOTES
Leg height is 29" from the finished floor to the top of Beam-Mounted Cabinet bottom shelf with a leveling range of 3".

Refer to application guide.

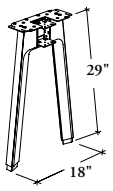

PRODUCT OPTIONS

Support Style	Depth	Finish
A Angled	18	Foundation Mica Accent

SAMPLE ORDER CODE

JNDLL A	**18**	**74**

DIMENSIONS INCHES / MM

D
18 / 457

PRICING

527

J N D L P
Structural Leg – Peninsula

This Structural Leg is used to connect and support the structural beam with any Peninsula in workstation application.

WHAT'S INCLUDED
1 leg, 2 levelers, 2 leveler covers, slotted groove trims and mounting hardware.

NOTES
Leg height is 29" from the finished floor to the top of the finished Peninsula with a leveling range of 3".

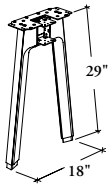

PRODUCT OPTIONS

Support Style	Depth	Finish
A Angled	18	Foundation Mica Accent

SAMPLE ORDER CODE

JNDLP A	18	74

DIMENSIONS INCHES / MM	PRICING
D	
18 / 457	527

JNDLLF
Low Structural Leg – Fence

These low supports are used to connect and support the structural beams at various configurations to create fence exposed application.

WHAT'S INCLUDED
1 leg (as specified), 2 top covers (if specified), 2 levelers, 2 leveler covers, slotted groove trims and mounting hardware.

NOTES
Can be used in fence application only.

Leg height is 18" from the finished floor to the top cover of the desk structure with a leveling range of 3".

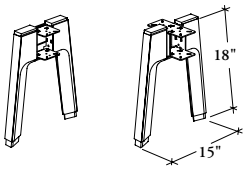

End (E) In-Line (I)

PRODUCT OPTIONS

Support Style	Depth	Configuration	Top Cover	Finish
A Angled	15	**E** End	**C** Top Cover	Foundation
		I In-Line		Mica
				Accent

SAMPLE ORDER CODE

JNDLLF A	15	E	C	74

DIMENSIONS INCHES / MM

D
15 / 381

PRICING

END (E)	IN-LINE (I)
440	480

J N D B C S
Structural Beam Cover – Side

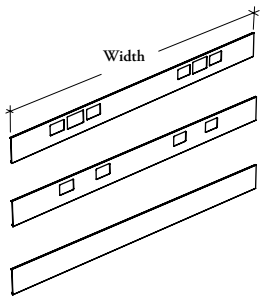

Power and Data (D)

Power Only (P)

No Opening (N)

This cover finishes the side of the structural beam.

WHAT'S INCLUDED
1 side-mounted beam cover (with or without power and data, as specified) and mounting clips.

WHAT'S EXCLUDED
Structural Beam, Chicago Structural Beam, voice and data faceplate.

NOTES
The Opening Position option (B) is **not** available on 24" to 48" wide covers.

The Opening Position option (L or R) is **not** available on 24" to 42" wide covers.

The Opening Position option (C) is **not** available on 24", 48", 54" and 60" wide covers.

Opening Position option **cannot** be specified with No Opening (N) Power and Data Opening.

When Post – 120° (Y) Width Reduction – Left Side is specified, the Post – 120° (Y) Width Reduction – Right Side is **not** available.

When Data Opening is specified, a Communication Extender Plate must be used to install voice and data faceplate.

PRODUCT OPTIONS

Power and Data Opening	Width	Width Reduction – Left Side	Width Reduction – Right Side	Opening Position (If Applicable)	Finish
D Power and Data	24, 30, 36, 42, 48, 54, 60, 66, 72, 78, 84	**A** Beam – Half	**A** Beam – Half	**B** Both Ends	Foundation
P Power Only		**B** Beam – Full	**B** Beam – Full	**C** Center	Mica
N No Opening		**R** Support – Half	**R** Support – Half	**L** Left	Accent
		S Support – Full	**S** Support – Full	**R** Right	
		Y Post – 120°	**Y** Post – 120°		
		N None	**N** None		

SAMPLE ORDER CODE

JNDBCS N	24	R	R		74

DIMENSIONS
INCHES / MM

PRICING

W	NO OPENING (N)	POWER AND DATA (D) OR POWER ONLY
24 / 610	57	n/a
30 / 762	61	79
36 / 914	66	82
42 / 1067	70	86
48 / 1219	77	90
54 / 1372	80	94
60 / 1524	84	97
66 / 1524	87	106
72 / 1829	92	109
78 / 1981	95	113
84 / 2134	99	117

JNDBTC
Structural Beam Cover – Top

This cover finishes the top of the structural beam.

WHAT'S INCLUDED
1 top-mounted beam cover, end caps (if specified) and mounting clips.

WHAT'S EXCLUDED
Structural Beam and Chicago Structural Beam.

NOTES
Two End Caps option (T) is available with None Width Reduction option (N) only.

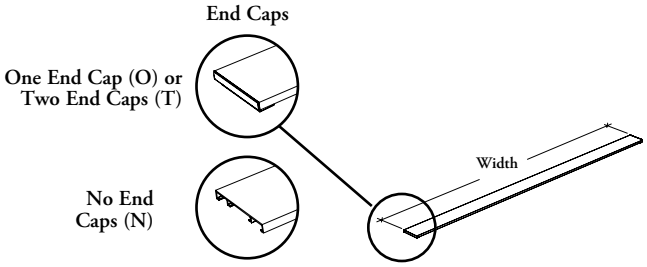

PRODUCT OPTIONS

Width	Width Reduction	End Cap	Finish
24, 27, 30, 33, 36, 39, 42, 45, 48, 51, 54, 57, 60, 63, 66, 69, 72, 78, 84	**A** Beam – Half **B** Beam – Full **Y** Post – 120° **N** None	**O** One End Cap **T** Two End Caps **N** No End Caps	Foundation Mica Accent

SAMPLE ORDER CODE

JNDBTC 24	N	N	74

DIMENSIONS INCHES / MM

PRICING

W	NO END CAPS (N) OR ONE END CAP (O)	TWO END CAPS (T)
24 / 610	50	50
27 / 686	52	n/a
30 / 762	52	52
33 / 838	55	n/a
36 / 914	55	55
39 / 991	57	n/a
42 / 1067	57	57
45 / 1143	59	n/a
48 / 1219	59	59
51 / 1295	65	n/a
54 / 1372	65	65
57 / 1448	67	n/a
60 / 1524	67	67
63 / 1600	67	n/a
66 / 1524	67	67
69 / 1753	75	n/a
72 / 1829	75	75
78 / 1981	78	78
84 / 2134	80	80

EZ compatible

JNDBCB

Bottom Wire Cover for Structural Beam – Standard

This cover hides and prevents people from reaching wires inside the beam.

WHAT'S INCLUDED

	Beam Width			
	24" to 36"	42" to 54"	60" to 72"	78" or 84"
Bottom-Mounted Beam Cover section	2	3	4	5

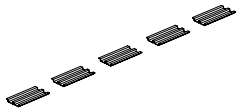

PRODUCT OPTIONS

Width	Finish
24, 30, 36, 42, 48, 54, 60, 66, 72, 78, 84	**52** Ebony

SAMPLE ORDER CODE

JNDBCB 24	52

DIMENSIONS INCHES / MM

W
24 / 610
30 / 762
36 / 914
42 / 1067
48 / 1219
54 / 1372
60 / 1524
66 / 1524
72 / 1829
78 / 1981
84 / 2134

PRICING

23
27
30
34
38
42
49
49
56
59
65

JNDBK
Bottom Kit for Structural Beam

The Reinforced Bottom Kit adds structure to the beam when using exposed end legs. The Standard Bottom Kit is a replacement part that helps mounting various products to the beam.

WHAT'S INCLUDED

	Beam Width			
	24"or 30"	36"to 48"	54"to 66"	72"to 84"
Facing Down Brackets or	2	3	4	5
Reinforced Bottom Kit	1	1	1	1

NOTES
Refer to application guide.

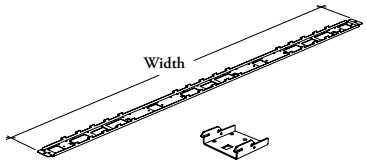

Reinforced (R) Standard (S)

PRODUCT OPTIONS

Width	Beam Configuration	Finish
24, 30, 36. 42, 48, 54, 60, 66, 72, 78, 84	**R** Reinforced **S** Standard	**52** Ebony

SAMPLE ORDER CODE

JNDBK 24	S	52

DIMENSIONS
INCHES / MM

PRICING

W	STANDARD (S)	REINFORCED (R)
24 / 610	29	n/a
30 / 762	29	n/a
36 / 914	42	n/a
42 / 1067	42	n/a
48 / 1219	42	71
54 / 1372	58	86
60 / 1524	58	109
66 / 1524	58	129
72 / 1829	71	152
78 / 1981	71	175
84 / 2134	71	198

EZ compatible

J N D S W B

Wall Anchored Stabilizer for Structure

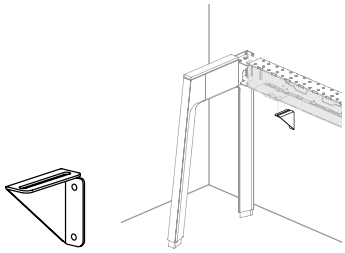

The Wall Anchored Stabilizer is used with a beam against a wall to maintain stability of the single-sided structure.

WHAT'S INCLUDED
1 wall anchored bracket and beam screws.

WHAT'S EXCLUDED
EZ Fence Beam, Chicago EZ Fence Beam, EZ Fence Beam for Corridor, Chicago EZ Fence Beam for Corridor, EZ Fence Structural Leg – Single-Sided, Structural Beam, Structural Leg – Single-Sided and building wall mounting hardware.

NOTES
Must be attached to a building wall.

Refer to application guide.

PRODUCT OPTIONS

Finish
Foundation
Mica
Accent

SAMPLE ORDER CODE

JNDSWB 74

PRICING

	21

EZ compatible

JNDST

Table Attached Stabilizer for Structure

The Table Attached Stabilizer is used with single-sided structural beam with structural leg, a hiSpace or Navigate Height-Adjustable Table against a wall or in a corridor to maintain stability of the structure.

WHAT'S INCLUDED

1 table attached stabilizer, 1 anti-dislodgement structural leg bracket, 1 reversible kit bracket and mounting hardware.

WHAT'S EXCLUDED

hiSpace Quick Connect Height-Adjustable Mechanisms, Navigate Height-Adjustable Bases, Structural Leg – Single-Sided and EZ Fence Structural Leg – Single-Sided.

NOTES

Height-Adjustable Base Depth (23C) is available with 18" Structural Leg Depth only.

Height-Adjustable Base Depth (29T) is available with Navigate Height-Adjustable Base Style (N) and 24" Structural Leg Depth only.

Height-Adjustable Base Depth (29C) is available with hiSpace Height-Adjustable Base Style (H) and 24" Structural Leg Depth only.

Refer to application guide.

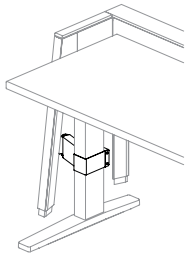

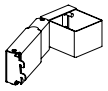

hiSpace (H)

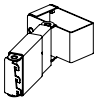

Navigate (N)

PRODUCT OPTIONS

Structural Leg Style	Structural Leg Depth	Height-Adjustable Base Style	Height-Adjustable Base Depth	Height-Adjustable Base Orientation	Finish
A Angled	18, 24	**H** hiSpace	23C, 29C, 29T	**B** Parallel to Beam	Foundation
		N Navigate			Mica
					Accent

SAMPLE ORDER CODE

JNDST A	24	N	29T	B	74

HEIGHT-ADJUSTABLE BASE STYLE	PRICING
H	342
N	342

J N D B S
Bench Stabilizer

The Bench Stabilizer is used to reduce occasional vibration on bench under certain applications such as extensive mounted storage or long lengths without suspended storage or structure attached storage.

WHAT'S INCLUDED
1 single-sided or double-sided bench stabilizer (as specified) and mounting hardware.

WHAT'S EXCLUDED
Structural Beams and Structural Legs.

NOTES
Refer to application guide.

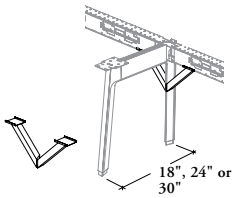

Single-Sided (S)

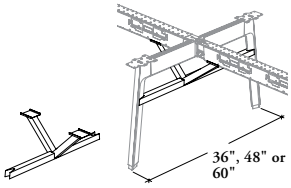

Double-Sided (D)

PRODUCT OPTIONS

Support Style	Structural Leg Depth	Leg Configuration	Finish
A Angled	18, 24, 30, 36, 48, 60	**D** Double-Sided	Foundation
		S Single-Sided	Mica
			Accent

SAMPLE ORDER CODE

JNDBS A	48	D	74

DIMENSIONS
INCHES / MM

PRICING

Structural Leg Depth	SINGLE-SIDED LEG (S)	DOUBLE-SIDED LEG (D)
18 / 457	99	n/a
24 / 610	99	241
30 / 762	99	n/a
36 / 914	n/a	248
48 / 1219	n/a	256
60 / 1524	n/a	263

JNDCPT
Structural Post Cover – Top

Replacement part that finishes the top of the Structural Posts – 120° by continuing the aesthetic look of Structural Beam Cover – Top (JNDBTC) or the mounting extrusion of an Add-On Screen – Beam-Mounted.

WHAT'S INCLUDED
1 two- or three-way 120° top structural post cover (as specified).

WHAT'S EXCLUDED
Low Structural Post – 120° and Structural Post – 120°

NOTES
Can be used with the following supports:

- Low Structural Post – 120° (JNDPLY)
- Structural Post – 120° (JNDPY)

Two-Way 120° (V)

Three-Way 120° (Y)

PRODUCT OPTIONS

Configuration	Finish
V Two-Way 120°	Foundation
Y Three-Way 120°	Mica
	Accent

SAMPLE ORDER CODE

JNDCPT V	74

PRICING

48

J N D L C
Structural Leg Cover – Top

Leg Configurations

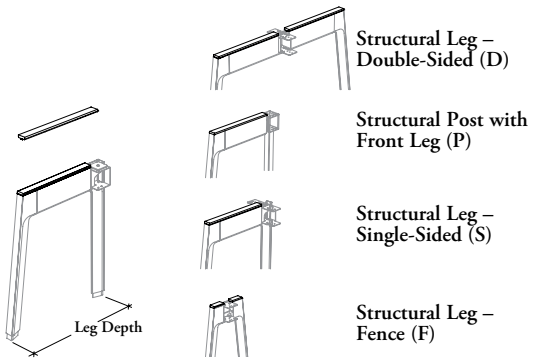

Structural Leg – Double-Sided (D)

Structural Post with Front Leg (P)

Structural Leg – Single-Sided (S)

Structural Leg – Fence (F)

This cover finishes the top of the Structural Leg in exposed application.

WHAT'S INCLUDED
1 cover (post with front leg, single-sided leg and combo mounting option of double-sided or fence legs) or 2 covers (double-sided or fence) and mounting clips.

WHAT'S EXCLUDED
Structural Legs, Structural Posts with Front Leg and Structural Leg – Fence.

NOTES
This cover can be used only with the following supports:

- Structural Post with Front Leg (JNDPF)
- Structural Leg – Single- or Double-Sided (JNDLS or JNDLD)
- Structural Leg – Fence (JNDLF)
- Low Structural Leg – Fence (JNDLLF)

PRODUCT OPTIONS

Support Style	Leg Depth	Leg Configuration	Mounting Option	Finish
A Angled	15, 18, 24, 36, 48	**D** Structural Leg – Double-Sided **F** Structural Leg – Fence **P** Structural Post with Front Leg **S** Structural Leg – Single-Sided	**C** Top Cover **X** Combo Worksurface & Top Cover	Foundation Mica Accent

SAMPLE ORDER CODE

JNDLC A	48	D	X	74

DIMENSIONS
INCHES / MM

PRICING

STRUCTURAL POST WITH FRONT LEG (P) OR STRUCTURAL LEG – SINGLE-SIDED (S)

Leg Depth	TOP COVER (C)	COMBO WORKSURFACE & TOP COVER (X)
18 / 457	49	n/a
24 / 610	64	n/a

STRUCTURAL LEG – FENCE (F)

	TOP COVER (C)	COMBO WORKSURFACE & TOP COVER (X)
15 / 381	66	32
18 / 457	66	32

STRUCTURAL LEG – DOUBLE-SIDED (D)

	TOP COVER (C)	COMBO WORKSURFACE & TOP COVER (X)
36 / 914	93	49
48 / 1219	124	64

JNDLW
Structural Leg Bracket for Worksurface

This bracket is used to convert a leg in exposed application to worksurface supporting application.

WHAT'S INCLUDED
1 bracket (single-sided) or 2 brackets (double-sided) and mounting hardware.

WHAT'S EXCLUDED
Structural Legs and Front Leg.

NOTES
This bracket can only be used on the following supports:

- Structural Post with Front Leg (JNDPF)
- Structural Leg – Single- or Double-Sided (JNDLS or JNDLD)

Leg Configurations

Structural Leg – Double-Sided (D)

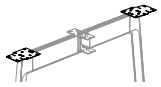

Structural Post with Front Leg (P)

Structural Leg – Single-Sided (S)

PRODUCT OPTIONS

Support Style	Leg Configuration	Finish
A Angled	**D** Structural Leg – Double-Sided	**52** Ebony
	P Structural Post with Front Leg	
	S Structural Leg – Single-Sided	

SAMPLE ORDER CODE

JNDLW A	D	52

LEG CONFIGURATION	PRICING
P	27
S	27
D	52

worksurfaces

worksurfaces product map

J N W S S N Single-Sided Rectangular Worksurface

Page 962

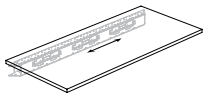

J N W R S E Single-Sided Rectangular Worksurface – Exposed Beam

Page 966

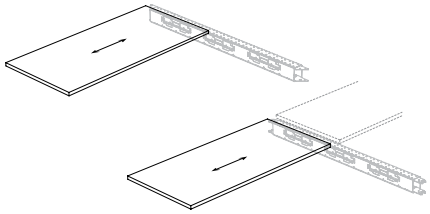

J N W S C N Single-Sided Rectangular Worksurface – Cross Grain

Page 970

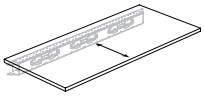

J N W S C E Single-Sided Rectangular Worksurface – Cross Grain – Exposed Beam

Page 974

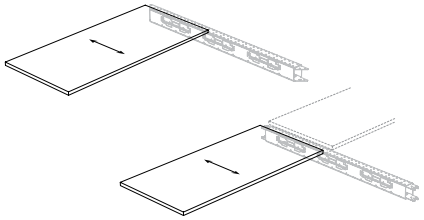

J N W D S N Double-Sided Rectangular Worksurface

Page 978

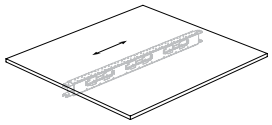

J N W D S E Double-Sided Rectangular Worksurface – Exposed Beam

Page 984

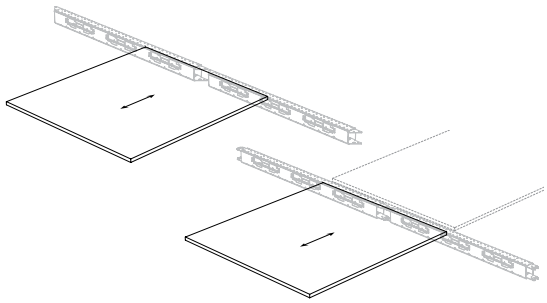

J N W D C N Double-Sided Rectangular Worksurface – Cross Grain

Page 990

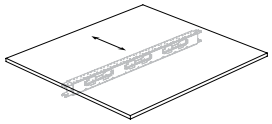

J N W P S N Peninsula Worksurface

Page 994

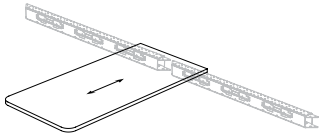

worksurfaces product map

J N W P S E Peninsula Worksurface – Exposed Beam

Page 995

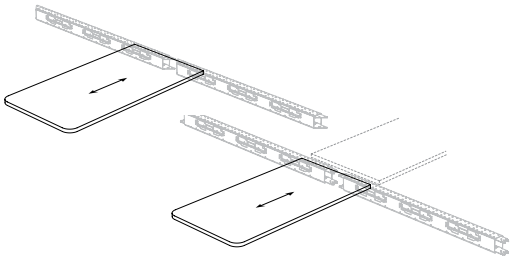

J N W P C N Peninsula Worksurface – Cross Grain

Page 996

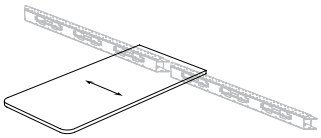

J N W P C E Peninsula Worksurface – Cross Grain – Exposed Beam

Page 997

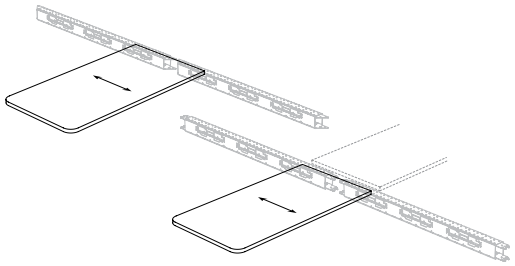

J N W P H High Peninsula Worksurface

Page 998

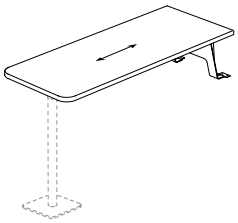

J N W P G N Writable Glass Peninsula Worksurface – Worksurface Connected

Page 999

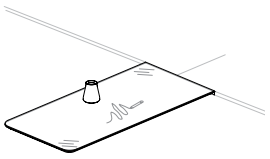

J N W P G E Writable Glass Peninsula Worksurface – Exposed Beam

Page 1000

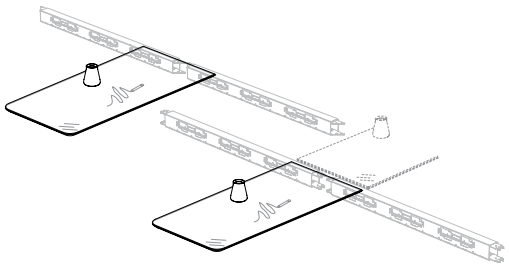

J N W D G Double-Sided Writable Glass Worksurface

Page 1001

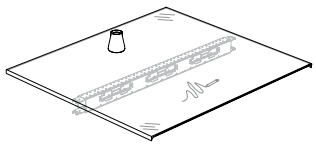

J N W F G Writable Glass Worksurface – Center Beam-Mounted

Page 1002

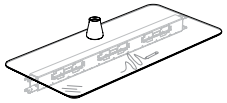

worksurfaces product map

J N W R C Worksurface Reinforcement Channel

Page 1003

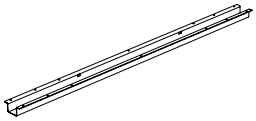

J N W B B Beam-Mounted Worksurface Brackets

Page 1004

J N W F P Linking Plates

Page 1004

J N W S S N

Single-Sided Rectangular Worksurface

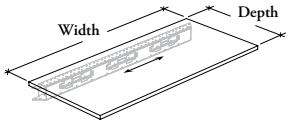

This worksurface provides a primary or secondary surface in multiple applications.

WHAT'S INCLUDED
1 worksurface, 2 wire management clips, grommets or access door (if specified), cable tray (**not** included with None (NN) option) and linking plates.

WHAT'S EXCLUDED
Structural Beam, Chicago Structural Beam, Supports, Worksurface Reinforcement Channel, Cable Tray for Access Door and Square Grommet Cover.

NOTES
Power and Data Access options are not all available for every dimensions. Refer to specification software for available options.

When Power and Data Access option (GB, GC, SL or SR) is specified, the Access Door Finish (NA) must be specified.

When Power and Data Access option (AC, AL or AR) is specified, the Grommet Finish (NA) must be specified.

When Power and Data Access option (NN) is specified, the Access Door (NA) and Grommet (NA) Finishes must be specified.

PRODUCT OPTIONS

Depth	Width	Power and Data Access
18, 24, 30	24, 27, 30, 33, 36, 39, 42, 45, 48, 51, 54, 57, 60, 63, 66, 69, 72, 75, 78, 81, 84, 90, 96	**AC** Access Door – Center **AL** Access Door – Left **AR** Access Door – Right **BL** Access Door – Left/Grommet – Center **BR** Access Door – Right/Grommet – Center **EL** End Access Door – Left/Grommet – Center **ER** End Access Door – Right/Grommet – Center **GB** Grommets – Both **GC** Grommet – Center **SL** Square Cut-Out – Left/Grommet – Center **SR** Square Cut-Out – Right/Grommet – Center **NN** None (Shown)

SAMPLE ORDER CODE

JNWSSN 24	60	BL

PRODUCT OPTIONS CONTINUED

Screen Mounting Holes	Worksurface Finish	User Edge Trim Style	Edge Trim Finish	Access Door Finish	Grommet Finish
W With Mounting Holes **N** No Mounting Holes	Foundation Laminate	**6** 3 mm Straight Trim **8** 1.5 mm Flat Trim	Edge Trim Colors	Foundation Mica Accent **NA** Not Applicable	Foundation Mica Accent **NA** Not Applicable

SAMPLE ORDER CODE

N	LW	6	ST	60	60

See Pricing on the following page.

JNWSSN
Single-Sided Rectangular Worksurface (Continued)

DIMENSIONS INCHES / MM		PRICING			
D	W	GROMMETS – BOTH (GB)	GROMMET – CENTER (GC)	NONE (NN)	SQUARE CUT-OUT – LEFT OR RIGHT/GROMMET – CENTER (SL or SR)
18 / 457	24 / 610	n/a	202	202	n/a
18 / 457	27 / 686	n/a	210	210	n/a
18 / 457	30 / 762	n/a	224	224	n/a
18 / 457	33 / 838	n/a	233	233	n/a
18 / 457	36 / 914	n/a	244	244	n/a
18 / 457	39 / 991	n/a	256	256	n/a
18 / 457	42 / 1067	n/a	268	268	n/a
18 / 457	45 / 1143	n/a	271	271	n/a
18 / 457	48 / 1219	276	276	276	276
18 / 457	51 / 1295	293	293	293	293
18 / 457	54 / 1372	311	311	311	311
18 / 457	57 / 1448	328	328	328	328
18 / 457	60 / 1524	348	348	348	348
18 / 457	63 / 1600	351	351	351	351
18 / 457	66 / 1676	354	354	354	354
18 / 457	69 / 1753	362	362	362	362
18 / 457	72 / 1829	376	376	376	376
18 / 457	75 / 1905	384	384	384	384
18 / 457	78 / 1981	397	397	397	397
18 / 457	81 / 2057	408	408	408	408
18 / 457	84 / 2134	419	419	419	419
18 / 457	90 / 2286	441	n/a	441	n/a
18 / 457	96 / 2438	464	n/a	464	n/a
24 / 610	24 / 610	n/a	230	230	n/a
24 / 610	27 / 686	n/a	242	242	n/a
24 / 610	30 / 762	n/a	256	256	n/a
24 / 610	33 / 838	n/a	270	270	n/a
24 / 610	36 / 914	n/a	285	285	n/a
24 / 610	39 / 991	n/a	298	298	n/a
24 / 610	42 / 1067	n/a	314	314	n/a
24 / 610	45 / 1143	n/a	326	326	n/a
24 / 610	48 / 1219	340	340	340	340
24 / 610	51 / 1295	355	355	355	355
24 / 610	54 / 1372	369	369	369	369
24 / 610	57 / 1448	382	382	382	382
24 / 610	60 / 1524	397	397	397	397
24 / 610	63 / 1600	411	411	411	411
24 / 610	66 / 1676	425	425	425	425
24 / 610	69 / 1753	440	440	440	440
24 / 610	72 / 1829	454	454	454	454
24 / 610	75 / 1905	469	469	469	469
24 / 610	78 / 1981	480	480	480	480
24 / 610	81 / 2057	496	496	496	496
24 / 610	84 / 2134	508	508	508	508
24 / 610	90 / 2286	537	n/a	537	n/a
24 / 610	96 / 2438	565	n/a	565	n/a

Pricing is continued on the following page.

J N W S S N

Single-Sided Rectangular Worksurface (Continued)

DIMENSIONS
INCHES / MM

PRICING

D	W	GROMMETS – BOTH (GB)	GROMMET – CENTER (GC)	NONE (NN)	SQUARE CUT-OUT – LEFT OR RIGHT/GROMMET – CENTER (SL or SR)
30 / 762	24 / 610	n/a	256	256	n/a
30 / 762	27 / 686	n/a	273	273	n/a
30 / 762	30 / 762	n/a	292	292	n/a
30 / 762	33 / 838	n/a	305	305	n/a
30 / 762	36 / 914	n/a	325	325	n/a
30 / 762	39 / 991	n/a	343	343	n/a
30 / 762	42 / 1067	n/a	358	358	n/a
30 / 762	45 / 1143	n/a	376	376	n/a
30 / 762	48 / 1219	392	392	392	392
30 / 762	51 / 1295	411	411	411	411
30 / 762	54 / 1372	428	428	428	428
30 / 762	57 / 1448	445	445	445	445
30 / 762	60 / 1524	463	463	463	463
30 / 762	63 / 1600	479	479	479	479
30 / 762	66 / 1676	498	498	498	498
30 / 762	69 / 1753	514	514	514	514
30 / 762	72 / 1829	531	531	531	531
30 / 762	75 / 1905	550	550	550	550
30 / 762	78 / 1981	565	565	565	565
30 / 762	81 / 2057	583	583	583	583
30 / 762	84 / 2134	600	600	600	600
30 / 762	90 / 2286	632	n/a	632	n/a
30 / 762	96 / 2438	668	n/a	668	n/a

		ACCESS DOOR – CENTER (AC)	ACCESS DOOR – LEFT OR RIGHT (AL or AR)	ACCESS DOOR – LEFT OR RIGHT/GROMMET CENTER (BL or BR) OR END ACCESS DOOR – LEFT OR RIGHT/GROMMET CENTER (EL or ER)
24 / 610	30 / 762	378	n/a	n/a
24 / 610	33 / 838	n/a	392	n/a
24 / 610	36 / 914	407	407	n/a
24 / 610	39 / 991	n/a	420	n/a
24 / 610	42 / 1067	436	436	n/a
24 / 610	45 / 1143	n/a	448	n/a
24 / 610	48 / 1219	n/a	463	463
24 / 610	51 / 1295	n/a	477	477
24 / 610	54 / 1372	n/a	491	491
24 / 610	57 / 1448	n/a	503	503
24 / 610	60 / 1524	n/a	521	521
24 / 610	63 / 1600	n/a	532	532
24 / 610	66 / 1676	548	548	548
24 / 610	69 / 1753	n/a	561	561
24 / 610	72 / 1829	577	577	577
24 / 610	75 / 1905	n/a	589	589
24 / 610	78 / 1981	604	604	604
24 / 610	81 / 2057	n/a	617	617
24 / 610	84 / 2134	631	631	631
24 / 610	90 / 2286	n/a	660	n/a
24 / 610	96 / 2438	n/a	688	n/a

Pricing is continued on the following page.

JNWSSN

Single-Sided Rectangular Worksurface (Continued)

DIMENSIONS INCHES / MM		PRICING		
D	W	ACCESS DOOR – CENTER (AC)	ACCESS DOOR – LEFT OR RIGHT (AL or AR)	ACCESS DOOR – LEFT OR RIGHT/GROMMET CENTER (BL or BR) OR END ACCESS DOOR – LEFT OR RIGHT/GROMMET CENTER (EL or ER)
30 / 762	30 / 762	413	n/a	n/a
30 / 762	33 / 838	n/a	429	n/a
30 / 762	36 / 914	447	447	n/a
30 / 762	39 / 991	n/a	464	n/a
30 / 762	42 / 1067	480	480	n/a
30 / 762	45 / 1143	n/a	498	n/a
30 / 762	48 / 1219	n/a	514	514
30 / 762	51 / 1295	n/a	532	532
30 / 762	54 / 1372	n/a	551	551
30 / 762	57 / 1448	n/a	566	566
30 / 762	60 / 1524	n/a	585	585
30 / 762	63 / 1600	n/a	602	602
30 / 762	66 / 1676	619	619	619
30 / 762	69 / 1753	n/a	638	638
30 / 762	72 / 1829	653	653	653
30 / 762	75 / 1905	n/a	672	672
30 / 762	78 / 1981	688	688	688
30 / 762	81 / 2057	n/a	705	705
30 / 762	84 / 2134	723	723	723
30 / 762	90 / 2286	n/a	756	n/a
30 / 762	96 / 2438	n/a	790	n/a

J N W R S E

Single-Sided Rectangular Worksurface – Exposed Beam

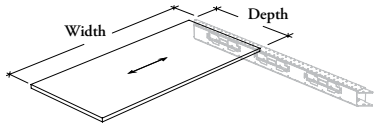

Single-Sided (S)

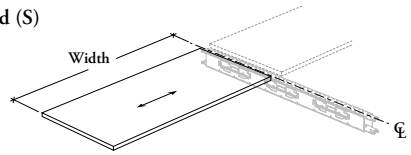

Double-Sided (D)

This worksurface provides a primary or secondary surface in multiple applications. The width is adapted to expose the beam laterally.

WHAT'S INCLUDED
1 worksurface, 2 wire management clips, grommets or access door (if specified) and cable tray (**not** included with None (NN) option).

WHAT'S EXCLUDED
Structural Beam, Chicago Structural Beam, Supports, Worksurface Reinforcement Channel, Cable Tray for Access Door and Square Grommet Cover.

NOTES
Power and Data Access options are not all available for every dimensions. Refer to specification software for available options.

When Power and Data Access option (GB, GC, SL or SR) is specified, the Access Door Finish (NA) must be specified.

When Power and Data Access option (AC, AL or AR) is specified, the Grommet Finish (NA) must be specified.

When Power and Data Access option (NN) is specified, the Access Door (NA) and Grommet (NA) Finishes must be specified.

When Power and Data Access option (EL) is specified, the Lateral Beam Position (R) is **not** applicable.

When Power and Data Access option (ER) is specified, the Lateral Beam Position (L) is **not** applicable.

PRODUCT OPTIONS

Lateral Beam Configuration	Depth	Width	Power and Data Access
D Double-Sided Beam	18, 24, 30	24, 27, 30, 33, 36, 39, 42, 45, 48, 51, 54, 57, 60, 63, 66, 69, 72, 75, 78, 81, 84, 90, 96	**AC** Access Door – Center
S Single-Sided Beam			**AL** Access Door – Left
			AR Access Door – Right
			BL Access Door – Left/Grommet – Center
			BR Access Door – Right/Grommet – Center
			EL End Access Door – Left/Grommet – Center
			ER End Access Door – Right/Grommet – Center
			GB Grommets – Both
			GC Grommet – Center
			SL Square Cut-Out – Left/Grommet – Center
			SR Square Cut-Out – Right/Grommet – Center
			NN None (Shown)

SAMPLE ORDER CODE

JNWRSE D	24	60	BL

PRODUCT OPTIONS CONTINUED

Lateral Beam Position	Screen Mounting Holes	Worksurface Finish	User Edge Trim Style	Edge Trim Finish	Access Door Finish	Grommet Finish
L Left	**W** With Mounting Holes	Foundation Laminate	**6** 3 mm Straight Trim	Edge Trim Colors	Foundation	Foundation
R Right (Shown)	**N** No Mounting Holes		**8** 1.5 mm Flat Trim		Mica	Mica
					Accent	Accent
					NA Not Applicable	**NA** Not Applicable

SAMPLE ORDER CODE

L	N	LW	6	ST	60	60

See Pricing on the following page.

JNWRSE
Single-Sided Rectangular Worksurface – Exposed Beam (Continued)

DIMENSIONS INCHES / MM		PRICING			
D	W	GROMMETS – BOTH (GB)	GROMMET – CENTER (GC)	NONE (NN)	SQUARE CUT-OUT – LEFT OR RIGHT/GROMMET – CENTER (SL or SR)
18 / 457	24 / 610	n/a	202	202	n/a
18 / 457	27 / 686	n/a	210	210	n/a
18 / 457	30 / 762	n/a	224	224	n/a
18 / 457	33 / 838	n/a	233	233	n/a
18 / 457	36 / 914	n/a	244	244	n/a
18 / 457	39 / 991	n/a	256	256	n/a
18 / 457	42 / 1067	n/a	268	268	n/a
18 / 457	45 / 1143	n/a	271	271	n/a
18 / 457	48 / 1219	276	276	276	276
18 / 457	51 / 1295	293	293	293	293
18 / 457	54 / 1372	311	311	311	311
18 / 457	57 / 1448	328	328	328	328
18 / 457	60 / 1524	348	348	348	348
18 / 457	63 / 1600	351	351	351	351
18 / 457	66 / 1676	354	354	354	354
18 / 457	69 / 1753	362	362	362	362
18 / 457	72 / 1829	376	376	376	376
18 / 457	75 / 1905	384	384	384	384
18 / 457	78 / 1981	397	397	397	397
18 / 457	81 / 2057	408	408	408	408
18 / 457	84 / 2134	419	419	419	419
18 / 457	90 / 2286	441	n/a	441	n/a
18 / 457	96 / 2438	464	n/a	464	n/a
24 / 610	24 / 610	n/a	230	230	n/a
24 / 610	27 / 686	n/a	242	242	n/a
24 / 610	30 / 762	n/a	256	256	n/a
24 / 610	33 / 838	n/a	270	270	n/a
24 / 610	36 / 914	n/a	285	285	n/a
24 / 610	39 / 991	n/a	298	298	n/a
24 / 610	42 / 1067	n/a	314	314	n/a
24 / 610	45 / 1143	n/a	326	326	n/a
24 / 610	48 / 1219	340	340	340	340
24 / 610	51 / 1295	355	355	355	355
24 / 610	54 / 1372	369	369	369	369
24 / 610	57 / 1448	382	382	382	382
24 / 610	60 / 1524	397	397	397	397
24 / 610	63 / 1600	411	411	411	411
24 / 610	66 / 1676	425	425	425	425
24 / 610	69 / 1753	440	440	440	440
24 / 610	72 / 1829	454	454	454	454
24 / 610	75 / 1905	469	469	469	469
24 / 610	78 / 1981	480	480	480	480
24 / 610	81 / 2057	496	496	496	496
24 / 610	84 / 2134	508	508	508	508
24 / 610	90 / 2286	537	n/a	537	n/a
24 / 610	96 / 2438	565	n/a	565	n/a

Pricing is continued on the following page.

J N W R S E

Single-Sided Rectangular Worksurface – Exposed Beam (Continued)

DIMENSIONS INCHES / MM | **PRICING**

D	W	GROMMETS – BOTH (GB)	GROMMET – CENTER (GC)	NONE (NN)	SQUARE CUT-OUT – LEFT OR RIGHT/GROMMET – CENTER (SL or SR)
30 / 762	24 / 610	n/a	256	256	n/a
30 / 762	27 / 686	n/a	273	273	n/a
30 / 762	30 / 762	n/a	292	292	n/a
30 / 762	33 / 838	n/a	305	305	n/a
30 / 762	36 / 914	n/a	325	325	n/a
30 / 762	39 / 991	n/a	343	343	n/a
30 / 762	42 / 1067	n/a	358	358	n/a
30 / 762	45 / 1143	n/a	376	376	n/a
30 / 762	48 / 1219	392	392	392	392
30 / 762	51 / 1295	411	411	411	411
30 / 762	54 / 1372	428	428	428	428
30 / 762	57 / 1448	445	445	445	445
30 / 762	60 / 1524	463	463	463	463
30 / 762	63 / 1600	479	479	479	479
30 / 762	66 / 1676	498	498	498	498
30 / 762	69 / 1753	514	514	514	514
30 / 762	72 / 1829	531	531	531	531
30 / 762	75 / 1905	550	550	550	550
30 / 762	78 / 1981	565	565	565	565
30 / 762	81 / 2057	583	583	583	583
30 / 762	84 / 2134	600	600	600	600
30 / 762	90 / 2286	632	n/a	632	n/a
30 / 762	96 / 2438	668	n/a	668	n/a

		ACCESS DOOR – CENTER (AC)	ACCESS DOOR – LEFT OR RIGHT (AL or AR)	ACCESS DOOR – LEFT OR RIGHT/GROMMET CENTER (BL or BR) OR END ACCESS DOOR – LEFT OR RIGHT/GROMMET CENTER (EL or ER)
24 / 610	30 / 762	378	n/a	n/a
24 / 610	33 / 838	n/a	392	n/a
24 / 610	36 / 914	407	407	n/a
24 / 610	39 / 991	n/a	420	n/a
24 / 610	42 / 1067	436	436	n/a
24 / 610	45 / 1143	n/a	448	n/a
24 / 610	48 / 1219	n/a	463	463
24 / 610	51 / 1295	n/a	477	477
24 / 610	54 / 1372	n/a	491	491
24 / 610	57 / 1448	n/a	503	503
24 / 610	60 / 1524	n/a	521	521
24 / 610	63 / 1600	n/a	532	532
24 / 610	66 / 1676	548	548	548
24 / 610	69 / 1753	n/a	561	561
24 / 610	72 / 1829	577	577	577
24 / 610	75 / 1905	n/a	589	589
24 / 610	78 / 1981	604	604	604
24 / 610	81 / 2057	n/a	617	617
24 / 610	84 / 2134	631	631	631
24 / 610	90 / 2286	n/a	660	n/a
24 / 610	96 / 2438	n/a	688	n/a

Pricing is continued on the following page.

JNWRSE
Single-Sided Rectangular Worksurface – Exposed Beam (Continued)

DIMENSIONS INCHES / MM		PRICING		
D	W	ACCESS DOOR – CENTER (AC)	ACCESS DOOR – LEFT OR RIGHT (AL or AR)	ACCESS DOOR – LEFT OR RIGHT/GROMMET CENTER (BL or BR) OR END ACCESS DOOR – LEFT OR RIGHT/GROMMET CENTER (EL or ER)
30 / 762	30 / 762	413	n/a	n/a
30 / 762	33 / 838	n/a	429	n/a
30 / 762	36 / 914	447	447	n/a
30 / 762	39 / 991	n/a	464	n/a
30 / 762	42 / 1067	480	480	n/a
30 / 762	45 / 1143	n/a	498	n/a
30 / 762	48 / 1219	n/a	514	514
30 / 762	51 / 1295	n/a	532	532
30 / 762	54 / 1372	n/a	551	551
30 / 762	57 / 1448	n/a	566	566
30 / 762	60 / 1524	n/a	585	585
30 / 762	63 / 1600	n/a	602	602
30 / 762	66 / 1676	619	619	619
30 / 762	69 / 1753	n/a	638	638
30 / 762	72 / 1829	653	653	653
30 / 762	75 / 1905	n/a	672	672
30 / 762	78 / 1981	688	688	688
30 / 762	81 / 2057	n/a	705	705
30 / 762	84 / 2134	723	723	723
30 / 762	90 / 2286	n/a	756	n/a
30 / 762	96 / 2438	n/a	790	n/a

J N W S C N

Single-Sided Rectangular Worksurface – Cross Grain

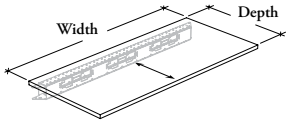

This worksurface with cross grain orientation provides a primary or secondary surface in multiple applications.

WHAT'S INCLUDED
1 worksurface, 2 wire management clips, grommets or access door (if specified) and cable tray (**not** included with None (NN) option).

WHAT'S EXCLUDED
Structural Beam, Chicago Structural Beam, Supports, Worksurface Reinforcement Channel, Cable Tray for Access Door and Square Grommet Cover.

NOTES
Power and Data Access options are not all available for every dimensions. Refer to specification software for available options.

When Power and Data Access option (GB, GC, SL or SR) is specified, the Access Door Finish (NA) must be specified.

When Power and Data Access option (AC, AL or AR) is specified, the Grommet Finish (NA) must be specified.

When Power and Data Access option (NN) is specified, the Access Door (NA) and Grommet (NA) Finishes must be specified.

PRODUCT OPTIONS

Depth	Width	Power and Data Access
18, 24, 30	24, 27, 30, 33, 36, 39, 42, 45, 48, 51, 54, 57, 60	**AC** Access Door – Center
		AL Access Door – Left
		AR Access Door – Right
		BL Access Door – Left/Grommet – Center
		BR Access Door – Right/Grommet – Center
		EL End Access Door – Left/Grommet – Center
		ER End Access Door – Right/Grommet – Center
		GB Grommets – Both
		GC Grommet – Center
		SL Square Cut-Out – Left/Grommet – Center
		SR Square Cut-Out – Right/Grommet – Center
		NN None (Shown)

SAMPLE ORDER CODE

JNWSCN 24	60	BL

PRODUCT OPTIONS CONTINUED

Screen Mounting Holes	Worksurface Finish	User Edge Trim Style	Edge Trim Finish	Access Door Finish	Grommet Finish
W With Mounting Holes	Foundation Laminate	**6** 3 mm Straight Trim	Edge Trim Colors	Foundation	Foundation
N No Mounting Holes		**8** 1.5 mm Flat Trim		Mica	Mica
				Accent	Accent
				NA Not Applicable	**NA** Not Applicable

SAMPLE ORDER CODE

N	LW	6	ST	60	60

See Pricing on the following page.

J N W S C N
Single-Sided Rectangular Worksurface – Cross Grain (Continued)

DIMENSIONS INCHES / MM		PRICING			
D	W	GROMMETS – BOTH (GB)	GROMMET – CENTER (GC)	NONE (NN)	SQUARE CUT-OUT – LEFT OR RIGHT/GROMMET – CENTER (SL or SR)
18 / 457	24 / 610	n/a	202	202	n/a
18 / 457	27 / 686	n/a	210	210	n/a
18 / 457	30 / 762	n/a	224	224	n/a
18 / 457	33 / 838	n/a	233	233	n/a
18 / 457	36 / 914	n/a	244	244	n/a
18 / 457	39 / 991	n/a	256	256	n/a
18 / 457	42 / 1067	n/a	268	268	n/a
18 / 457	45 / 1143	n/a	271	271	n/a
18 / 457	48 / 1219	276	276	276	276
18 / 457	51 / 1295	293	293	293	293
18 / 457	54 / 1372	311	311	311	311
18 / 457	57 / 1448	328	328	328	328
18 / 457	60 / 1524	348	348	348	348
24 / 610	24 / 610	n/a	230	230	n/a
24 / 610	27 / 686	n/a	242	242	n/a
24 / 610	30 / 762	n/a	256	256	n/a
24 / 610	33 / 838	n/a	270	270	n/a
24 / 610	36 / 914	n/a	285	285	n/a
24 / 610	39 / 991	n/a	298	298	n/a
24 / 610	42 / 1067	n/a	314	314	n/a
24 / 610	45 / 1143	n/a	326	326	n/a
24 / 610	48 / 1219	340	340	340	340
24 / 610	51 / 1295	355	355	355	355
24 / 610	54 / 1372	369	369	369	369
24 / 610	57 / 1448	382	382	382	382
24 / 610	60 / 1524	397	397	397	397
30 / 762	24 / 610	n/a	256	256	n/a
30 / 762	27 / 686	n/a	273	273	n/a
30 / 762	30 / 762	n/a	292	292	n/a
30 / 762	33 / 838	n/a	305	305	n/a
30 / 762	36 / 914	n/a	325	325	n/a
30 / 762	39 / 991	n/a	343	343	n/a
30 / 762	42 / 1067	n/a	358	358	n/a
30 / 762	45 / 1143	n/a	376	376	n/a
30 / 762	48 / 1219	392	392	392	392
30 / 762	51 / 1295	411	411	411	411
30 / 762	54 / 1372	428	428	428	428
30 / 762	57 / 1448	445	445	445	445
30 / 762	60 / 1524	463	463	463	463

Pricing is continued on the following page.

J N W S C N

Single-Sided Rectangular Worksurface – Cross Grain (Continued)

DIMENSIONS INCHES / MM		PRICING		
D	W	ACCESS DOOR – CENTER (AC)	ACCESS DOOR – LEFT OR RIGHT (AL or AR)	ACCESS DOOR – LEFT OR RIGHT/GROMMET CENTER (BL or BR) OR END ACCESS DOOR – LEFT OR RIGHT/GROMMET CENTER (EL or ER)
24 / 610	30 / 762	378	n/a	n/a
24 / 610	33 / 838	n/a	392	n/a
24 / 610	36 / 914	407	407	n/a
24 / 610	39 / 991	n/a	420	n/a
24 / 610	42 / 1067	436	436	n/a
24 / 610	45 / 1143	n/a	448	n/a
24 / 610	48 / 1219	n/a	463	463
24 / 610	51 / 1295	n/a	477	477
24 / 610	54 / 1372	n/a	491	491
24 / 610	57 / 1448	n/a	503	503
24 / 610	60 / 1524	n/a	521	521
30 / 762	30 / 762	413	n/a	n/a
30 / 762	33 / 838	n/a	429	n/a
30 / 762	36 / 914	447	447	n/a
30 / 762	39 / 991	n/a	464	n/a
30 / 762	42 / 1067	480	480	n/a
30 / 762	45 / 1143	n/a	498	n/a
30 / 762	48 / 1219	n/a	514	514
30 / 762	51 / 1295	n/a	532	532
30 / 762	54 / 1372	n/a	551	551
30 / 762	57 / 1448	n/a	566	566
30 / 762	60 / 1524	n/a	585	585

JNWSCE

Single-Sided Rectangular Worksurface – Cross Grain – Exposed Beam

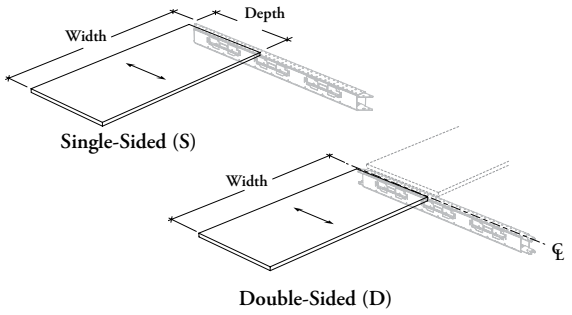

This worksurface with cross grain orientation provides a primary or secondary surface in multiple applications. The width is adapted to expose the beam laterally.

WHAT'S INCLUDED
1 worksurface, 2 wire management clips, grommets or access door (if specified) and cable tray (**not** included with None (NN) option).

WHAT'S EXCLUDED
Structural Beam, Chicago Structural Beam, Supports, Worksurface Reinforcement Channel, Cable Tray for Access Door and Square Grommet Cover.

NOTES
Power and Data Access options are not all available for every dimensions. Refer to specification software for available options.

When Power and Data Access option (GB, GC, SL or SR) is specified, the Access Door Finish (NA) must be specified.

When Power and Data Access option (AC, AL or AR) is specified, the Grommet Finish (NA) must be specified.

When Power and Data Access option (NN) is specified, the Access Door (NA) and Grommet (NA) Finishes must be specified.

When Power and Data Access option (EL) is specified, the Lateral Beam Position (R) is **not** applicable.

When Power and Data Access option (ER) is specified, the Lateral Beam Position (L) is **not** applicable.

PRODUCT OPTIONS

Lateral Beam Configuration	Depth	Width	Power and Data Access
D Double-Sided Beam	18, 24, 30	24, 27, 30, 33, 36, 39, 42, 45, 48, 51, 54, 57, 60	**AC** Access Door – Center
S Single-Sided Beam			**AL** Access Door – Left
			AR Access Door – Right
			BL Access Door – Left/Grommet – Center
			BR Access Door – Right/Grommet – Center
			EL End Access Door – Left/Grommet – Center
			ER End Access Door – Right/Grommet – Center
			GB Grommets – Both
			GC Grommet – Center
			SL Square Cut-Out – Left/Grommet – Center
			SR Square Cut-Out – Right/Grommet – Center
			NN None (Shown)

SAMPLE ORDER CODE

JNWSCE D	24	60	BL

PRODUCT OPTIONS CONTINUED

Lateral Beam Position	Screen Mounting Holes	Worksurface Finish	User Edge Trim Style	Edge Trim Finish	Access Door Finish	Grommet Finish
L Left	**W** With Mounting Holes	Foundation Laminate	**6** 3 mm Straight Trim	Edge Trim Colors	Foundation	Foundation
R Right (Shown)	**N** No Mounting Holes		**8** 1.5 mm Flat Trim		Mica	Mica
					Accent	Accent
					NA Not Applicable	**NA** Not Applicable

SAMPLE ORDER CODE

L	N	LW	6	ST	60	60

See Pricing on the following page.

JNWSCE

Single-Sided Rectangular Worksurface – Cross Grain – Exposed Beam (Continued)

DIMENSIONS INCHES / MM		PRICING			
D	W	GROMMETS – BOTH (GB)	GROMMET – CENTER (GC)	NONE (NN)	SQUARE CUT-OUT – LEFT OR RIGHT/GROMMET – CENTER (SL or SR)
18 / 457	24 / 610	n/a	202	202	n/a
18 / 457	27 / 686	n/a	210	210	n/a
18 / 457	30 / 762	n/a	224	224	n/a
18 / 457	33 / 838	n/a	233	233	n/a
18 / 457	36 / 914	n/a	244	244	n/a
18 / 457	39 / 991	n/a	256	256	n/a
18 / 457	42 / 1067	n/a	268	268	n/a
18 / 457	45 / 1143	n/a	271	271	n/a
18 / 457	48 / 1219	276	276	276	276
18 / 457	51 / 1295	293	293	293	293
18 / 457	54 / 1372	311	311	311	311
18 / 457	57 / 1448	328	328	328	328
18 / 457	60 / 1524	348	348	348	348
24 / 610	24 / 610	n/a	230	230	n/a
24 / 610	27 / 686	n/a	242	242	n/a
24 / 610	30 / 762	n/a	256	256	n/a
24 / 610	33 / 838	n/a	270	270	n/a
24 / 610	36 / 914	n/a	285	285	n/a
24 / 610	39 / 991	n/a	298	298	n/a
24 / 610	42 / 1067	n/a	314	314	n/a
24 / 610	45 / 1143	n/a	326	326	n/a
24 / 610	48 / 1219	340	340	340	340
24 / 610	51 / 1295	355	355	355	355
24 / 610	54 / 1372	369	369	369	369
24 / 610	57 / 1448	382	382	382	382
24 / 610	60 / 1524	397	397	397	397
30 / 762	24 / 610	n/a	256	256	n/a
30 / 762	27 / 686	n/a	273	273	n/a
30 / 762	30 / 762	n/a	292	292	n/a
30 / 762	33 / 838	n/a	305	305	n/a
30 / 762	36 / 914	n/a	325	325	n/a
30 / 762	39 / 991	n/a	343	343	n/a
30 / 762	42 / 1067	n/a	358	358	n/a
30 / 762	45 / 1143	n/a	376	376	n/a
30 / 762	48 / 1219	392	392	392	392
30 / 762	51 / 1295	411	411	411	411
30 / 762	54 / 1372	428	428	428	428
30 / 762	57 / 1448	445	445	445	445
30 / 762	60 / 1524	463	463	463	463

Pricing is continued on the following page.

J N W S C E

Single-Sided Rectangular Worksurface – Cross Grain – Exposed Beam (Continued)

DIMENSIONS INCHES / MM | **PRICING**

D	W	ACCESS DOOR – CENTER (AC)	ACCESS DOOR – LEFT OR RIGHT (AL or AR)	ACCESS DOOR – LEFT OR RIGHT/GROMMET CENTER (BL or BR) OR END ACCESS DOOR – LEFT OR RIGHT/GROMMET CENTER (EL or ER)
24 / 610	30 / 762	378	n/a	n/a
24 / 610	33 / 838	n/a	392	n/a
24 / 610	36 / 914	407	407	n/a
24 / 610	39 / 991	n/a	420	n/a
24 / 610	42 / 1067	436	436	n/a
24 / 610	45 / 1143	n/a	448	n/a
24 / 610	48 / 1219	n/a	463	463
24 / 610	51 / 1295	n/a	477	477
24 / 610	54 / 1372	n/a	491	491
24 / 610	57 / 1448	n/a	503	503
24 / 610	60 / 1524	n/a	521	521
30 / 762	30 / 762	413	n/a	n/a
30 / 762	33 / 838	n/a	429	n/a
30 / 762	36 / 914	447	447	n/a
30 / 762	39 / 991	n/a	464	n/a
30 / 762	42 / 1067	480	480	n/a
30 / 762	45 / 1143	n/a	498	n/a
30 / 762	48 / 1219	n/a	514	514
30 / 762	51 / 1295	n/a	532	532
30 / 762	54 / 1372	n/a	551	551
30 / 762	57 / 1448	n/a	566	566
30 / 762	60 / 1524	n/a	585	585

J N W D S N
Double-Sided Rectangular Worksurface

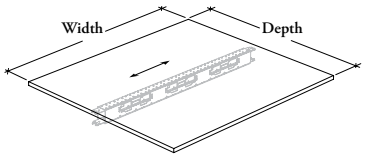

This worksurface provides a primary or secondary surface for two users in multiple applications.

WHAT'S INCLUDED
1 worksurface, 4 wire management clips, grommets or access doors (if specified) and cable trays (**not** included with None (NN) option).

WHAT'S EXCLUDED
Structural Beam, Chicago Structural Beam, Supports, Worksurface Reinforcement Channel, Cable Tray for Access Door and Square Grommet Cover.

NOTES
Power and Data Access options are **not** all available for every dimensions. Refer to specification software for available options.

When Power and Data Access option (GB, GC, SJ, SL or SR) is specified, the Access Door Finish (NA) must be specified.

When Power and Data Access option (AC, AJ, AL or AR) is specified, the Grommet Finish (NA) must be specified.

When Power and Data Access option (NN) is specified, the Access Door (NA) and Grommet (NA) Finishes must be specified.

PRODUCT OPTIONS

Depth	Width	Power and Data Access
36, 48, 60	24, 27, 30, 33, 36, 39, 42, 45, 48, 51, 54, 57, 60, 63, 66, 69, 72, 75, 78, 81, 84, 90, 96	**AC** Access Door – Center **AL** Access Door – Offset Left **AR** Access Door – Offset Right **AJ** Access Door – Justified **BL** Access Door – Offset Left/Grommet – Center **BR** Access Door – Offset Right/Grommet – Center **BJ** Access Door – Justified/Grommet – Center **ER** End Access Door/Grommet – Center **GB** Grommets – Both **GC** Grommet – Center **SL** Square Cut-Out – Offset Left/Grommet – Center **SR** Square Cut-Out – Offset Right/Grommet – Center **SJ** Square Cut-Out – Justified/Grommet – Center **NN** None (Shown)

SAMPLE ORDER CODE

JNWDSN 48	60	BL

PRODUCT OPTIONS CONTINUED

Screen Mounting Holes	Worksurface Finish	User Edge Trim Style	Edge Trim Finish	Access Door Finish	Grommet Finish
W With Mounting Holes **N** No Mounting Holes	Foundation Laminate	**6** 3 mm Straight Trim **8** 1.5 mm Flat Trim	Edge Trim Colors	Foundation Mica Accent **NA** Not Applicable	Foundation Mica Accent **NA** Not Applicable

SAMPLE ORDER CODE

N	LW	6	ST	60	60

See Pricing on the following page.

JNWDSN

Double-Sided Rectangular Worksurface (Continued)

DIMENSIONS INCHES / MM		PRICING			
D	W	GROMMETS – BOTH (GB)	GROMMET – CENTER (GC)	NONE (NN)	SQUARE CUT-OUT – OFFSET LEFT OR RIGHT/GROMM. – CENTER (SL or SR) SQUARE CUT-OUT – JUSTIFIED/GROMMET – CENTER (SJ)
36 / 914	24 / 610	n/a	302	302	n/a
36 / 914	27 / 686	n/a	324	324	n/a
36 / 914	30 / 762	n/a	345	345	n/a
36 / 914	33 / 838	n/a	362	362	n/a
36 / 914	36 / 914	n/a	383	383	n/a
36 / 914	39 / 991	n/a	405	405	n/a
36 / 914	42 / 1067	n/a	425	425	n/a
36 / 914	45 / 1143	n/a	445	445	n/a
36 / 914	48 / 1219	465	465	465	465
36 / 914	51 / 1295	485	485	485	485
36 / 914	54 / 1372	505	505	505	505
36 / 914	57 / 1448	528	528	528	528
36 / 914	60 / 1524	548	548	548	548
36 / 914	63 / 1600	566	566	566	566
36 / 914	66 / 1676	587	587	587	587
36 / 914	69 / 1753	609	609	609	609
36 / 914	72 / 1829	626	626	626	626
36 / 914	75 / 1905	648	648	648	648
36 / 914	78 / 1981	666	666	666	666
36 / 914	81 / 2057	686	686	686	686
36 / 914	84 / 2134	706	706	706	706
36 / 914	90 / 2286	747	n/a	747	n/a
36 / 914	96 / 2438	788	n/a	788	n/a
48 / 1219	24 / 610	n/a	358	358	n/a
48 / 1219	27 / 686	n/a	384	384	n/a
48 / 1219	30 / 762	n/a	411	411	n/a
48 / 1219	33 / 838	n/a	438	438	n/a
48 / 1219	36 / 914	n/a	465	465	n/a
48 / 1219	39 / 991	n/a	492	492	n/a
48 / 1219	42 / 1067	n/a	521	521	n/a
48 / 1219	45 / 1143	n/a	544	544	n/a
48 / 1219	48 / 1219	572	572	572	572
48 / 1219	51 / 1295	597	597	597	597
48 / 1219	54 / 1372	623	623	623	623
48 / 1219	57 / 1448	651	651	651	651
48 / 1219	60 / 1524	676	676	676	676
48 / 1219	63 / 1600	703	703	703	703
48 / 1219	66 / 1676	730	730	730	730
48 / 1219	69 / 1753	754	754	754	754
48 / 1219	72 / 1829	780	780	780	780
48 / 1219	75 / 1905	806	806	806	806
48 / 1219	78 / 1981	832	832	832	832
48 / 1219	81 / 2057	858	858	858	858
48 / 1219	84 / 2134	885	885	885	885
48 / 1219	90 / 2286	937	n/a	937	n/a
48 / 1219	96 / 2438	988	n/a	988	n/a

Pricing is continued on the following page.

J N W D S N

Double-Sided Rectangular Worksurface (Continued)

DIMENSIONS
INCHES / MM

PRICING

D	W	GROMMETS – BOTH (GB)	GROMMET – CENTER (GC)	NONE (NN)	SQUARE CUT-OUT – OFFSET LEFT OR RIGHT/GROMM. – CENTER (SL or SR) SQUARE CUT-OUT – JUSTIFIED/GROMMET – CENTER (SJ)
60 / 1524	24 / 610	n/a	414	414	n/a
60 / 1524	27 / 686	n/a	448	448	n/a
60 / 1524	30 / 762	n/a	480	480	n/a
60 / 1524	33 / 838	n/a	514	514	n/a
60 / 1524	36 / 914	n/a	548	548	n/a
60 / 1524	39 / 991	n/a	580	580	n/a
60 / 1524	42 / 1067	n/a	612	612	n/a
60 / 1524	45 / 1143	n/a	645	645	n/a
60 / 1524	48 / 1219	676	676	676	676
60 / 1524	51 / 1295	708	708	708	708
60 / 1524	54 / 1372	739	739	739	739
60 / 1524	57 / 1448	773	773	773	773
60 / 1524	60 / 1524	805	805	805	805
60 / 1524	63 / 1600	836	836	836	836
60 / 1524	66 / 1676	868	868	868	868
60 / 1524	69 / 1753	901	901	901	901
60 / 1524	72 / 1829	935	935	935	935
60 / 1524	75 / 1905	966	966	966	966
60 / 1524	78 / 1981	999	999	999	999
60 / 1524	81 / 2057	1030	1030	1030	1030
60 / 1524	84 / 2134	1061	1061	1061	1061
60 / 1524	90 / 2286	n/a	n/a	n/a	n/a
60 / 1524	96 / 2438	n/a	n/a	n/a	n/a

		ACCESS DOOR – CENTER (AC)	ACCESS DOOR – JUSTIFIED (AJ)	ACCESS DOOR – LEFT OR RIGHT (AL or AR)
48 / 1219	30 / 762	654	n/a	n/a
48 / 1219	33 / 838	n/a	682	n/a
48 / 1219	36 / 914	709	709	n/a
48 / 1219	39 / 991	n/a	735	n/a
48 / 1219	42 / 1067	763	763	n/a
48 / 1219	45 / 1143	n/a	789	n/a
48 / 1219	48 / 1219	n/a	817	n/a
48 / 1219	51 / 1295	n/a	842	n/a
48 / 1219	54 / 1372	n/a	867	n/a
48 / 1219	57 / 1448	n/a	894	n/a
48 / 1219	60 / 1524	n/a	919	919
48 / 1219	63 / 1600	n/a	947	947
48 / 1219	66 / 1676	973	973	973
48 / 1219	69 / 1753	n/a	999	999
48 / 1219	72 / 1829	1025	1025	1025
48 / 1219	75 / 1905	n/a	1051	1051
48 / 1219	78 / 1981	1078	1078	1078
48 / 1219	81 / 2057	n/a	1103	1103
48 / 1219	84 / 2134	1130	1130	1130
48 / 1219	90 / 2286	n/a	1181	1181
48 / 1219	96 / 2438	n/a	1233	1233

Pricing is continued on the following page.

JNWDSN
Double-Sided Rectangular Worksurface (Continued)

DIMENSIONS INCHES / MM		PRICING		
D	W	ACCESS DOOR – CENTER (AC) (CONTINUED)	ACCESS DOOR – JUSTIFIED (AJ) (CONTINUED)	ACCESS DOOR – LEFT OR RIGHT (AL or AR) (CONTINUED)
60 / 1524	30 / 762	727	n/a	n/a
60 / 1524	33 / 838	n/a	759	n/a
60 / 1524	36 / 914	791	791	n/a
60 / 1524	39 / 991	n/a	824	n/a
60 / 1524	42 / 1067	856	856	n/a
60 / 1524	45 / 1143	n/a	887	n/a
60 / 1524	48 / 1219	n/a	919	n/a
60 / 1524	51 / 1295	n/a	952	n/a
60 / 1524	54 / 1372	n/a	984	n/a
60 / 1524	57 / 1448	n/a	1017	n/a
60 / 1524	60 / 1524	n/a	1050	1050
60 / 1524	63 / 1600	n/a	1082	1082
60 / 1524	66 / 1676	1114	1114	1114
60 / 1524	69 / 1753	n/a	1145	1145
60 / 1524	72 / 1829	1179	1179	1179
60 / 1524	75 / 1905	n/a	1209	1209
60 / 1524	78 / 1981	1241	1241	1241
60 / 1524	81 / 2057	n/a	1274	1274
60 / 1524	84 / 2134	1306	1306	1306
60 / 1524	90 / 2286	n/a	n/a	n/a
60 / 1524	96 / 2438	n/a	n/a	n/a

		ACCESS DOOR – JUSTIFIED/GROMMET – CENTER (BJ) OR END ACCESS DOOR/GROMMET – CENTER (ER)	ACCESS DOOR – OFFSET LEFT OR RIGHT/GROMMET – CENTER (BL or BR)
48 / 1219	30 / 762	n/a	n/a
48 / 1219	33 / 838	n/a	n/a
48 / 1219	36 / 914	n/a	n/a
48 / 1219	39 / 991	n/a	n/a
48 / 1219	42 / 1067	n/a	n/a
48 / 1219	45 / 1143	n/a	n/a
48 / 1219	48 / 1219	817	n/a
48 / 1219	51 / 1295	842	n/a
48 / 1219	54 / 1372	867	n/a
48 / 1219	57 / 1448	894	n/a
48 / 1219	60 / 1524	919	919
48 / 1219	63 / 1600	947	947
48 / 1219	66 / 1676	973	973
48 / 1219	69 / 1753	999	999
48 / 1219	72 / 1829	1025	1025
48 / 1219	75 / 1905	1051	1051
48 / 1219	78 / 1981	1078	1078
48 / 1219	81 / 2057	1103	1103
48 / 1219	84 / 2134	1130	1130
48 / 1219	90 / 2286	n/a	n/a
48 / 1219	96 / 2438	n/a	n/a

Pricing is continued on the following page.

J N W D S N

Double-Sided Rectangular Worksurface (Continued)

DIMENSIONS INCHES / MM		PRICING	
D	W	ACCESS DOOR – JUSTIFIED/GROMMET – CENTER (BJ) OR END ACCESS DOOR/GROMMET – CENTER (ER) (CONTINUED)	ACCESS DOOR – OFFSET LEFT OR RIGHT/GROMMET – CENTER (BL or BR) (CONTINUED)
60 / 1524	30 / 762	n/a	n/a
60 / 1524	33 / 838	n/a	n/a
60 / 1524	36 / 914	n/a	n/a
60 / 1524	39 / 991	n/a	n/a
60 / 1524	42 / 1067	n/a	n/a
60 / 1524	45 / 1143	n/a	n/a
60 / 1524	48 / 1219	919	n/a
60 / 1524	51 / 1295	952	n/a
60 / 1524	54 / 1372	984	n/a
60 / 1524	57 / 1448	1017	n/a
60 / 1524	60 / 1524	1050	1050
60 / 1524	63 / 1600	1082	1082
60 / 1524	66 / 1676	1114	1114
60 / 1524	69 / 1753	1145	1145
60 / 1524	72 / 1829	1179	1179
60 / 1524	75 / 1905	1209	1209
60 / 1524	78 / 1981	1241	1241
60 / 1524	81 / 2057	1274	1274
60 / 1524	84 / 2134	1306	1306
60 / 1524	90 / 2286	n/a	n/a
60 / 1524	96 / 2438	n/a	n/a

J N W D S E

Double-Sided Rectangular Worksurface – Exposed Beam

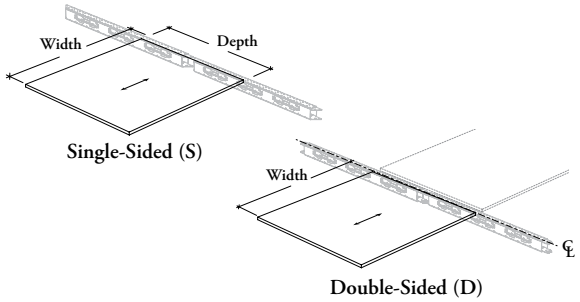

This worksurface provides a primary or secondary surface for two users in multiple applications. The width is adapted to expose the beam laterally.

WHAT'S INCLUDED
1 worksurface, 4 wire management clips, grommets or access doors (if specified) and cable trays (**not** included with None (NN) option).

WHAT'S EXCLUDED
Structural Beam, Chicago Structural Beam, Supports, Worksurface Reinforcement Channel, Cable Tray for Access Door and Square Grommet Cover.

NOTES
Power and Data Access options are not all available for every dimensions. Refer to specification software for available options.

When Power and Data Access option (GB, GC, SA, SL, SO or SR) is specified, the Access Door Finish (NA) must be specified.

When Power and Data Access option (AA, AC, AL, AO or AR) is specified, the Grommet Finish (NA) must be specified.

When Power and Data Access option (NN) is specified, the Access Door (NA) and Grommet (NA) Finishes must be specified.

PRODUCT OPTIONS

Lateral Beam Configuration	Depth	Width	Power and Data Access
D Double-Sided Beam	36, 48, 60	24, 27, 30, 33, 36, 39, 42, 45, 48, 51, 54, 57, 60, 63, 66, 69, 72, 75, 78, 81, 84, 90, 96	**AC** Access Door – Center
S Single-Sided Beam			**AL** Access Door – Offset Left
			AR Access Door – Offset Right
			AO Access Door – Justified – Opposite
			AA Access Door – Justified – Adjacent
			BL Access Door – Offset Left/Grommet – Center
			BR Access Door – Offset Right/Grommet – Center
			BO Access Door – Justified – Opposite/Grommet – Center
			BA Access Door – Justified – Adjacent/Grommet – Center
			ER End Access Door/Grommet – Center
			GB Grommets – Both
			GC Grommet – Center
			SL Square Cut-Out – Offset Left/Grommet – Center
			SR Square Cut-Out – Offset Right/Grommet – Center
			SO Square Cut-Out – Justified – Opposite/Grommet – Center
			SA Square Cut-Out – Justified – Adjacent/Grommet – Center
			NN None (Shown)

SAMPLE ORDER CODE

JNWDSE D	48	60	BL

PRODUCT OPTIONS CONTINUED

Screen Mounting Holes	Worksurface Finish	User Edge Trim Style	Edge Trim Finish	Access Door Finish	Grommet Finish
W With Mounting Holes	Foundation Laminate	**6** 3 mm Straight Trim	Edge Trim Colors	Foundation	Foundation
N No Mounting Holes		**8** 1.5 mm Flat Trim		Mica	Mica
				Accent	Accent
				NA Not Applicable	**NA** Not Applicable

SAMPLE ORDER CODE

N	LW	6	ST	60	60

See Pricing on the following page.

JNWDSE
Double-Sided Rectangular Worksurface – Exposed Beam (Continued)

DIMENSIONS INCHES / MM		PRICING			
D	W	GROMMETS – BOTH (GB)	GROMMET – CENTER (GC)	NONE (NN)	SQUARE CUT-OUT – JUSTIF. – ADJAC. OR OPP./GROMM. – CENTER (SA or SO) SQUARE CUT-OUT – OFF. LEFT OR RIGHT/GROMM. – CENTER (SL or SR)
36 / 914	24 / 610	n/a	302	302	n/a
36 / 914	27 / 686	n/a	324	324	n/a
36 / 914	30 / 762	n/a	345	345	n/a
36 / 914	33 / 838	n/a	362	362	n/a
36 / 914	36 / 914	n/a	383	383	n/a
36 / 914	39 / 991	n/a	405	405	n/a
36 / 914	42 / 1067	n/a	425	425	n/a
36 / 914	45 / 1143	n/a	445	445	n/a
36 / 914	48 / 1219	465	465	465	465
36 / 914	51 / 1295	485	485	485	485
36 / 914	54 / 1372	505	505	505	505
36 / 914	57 / 1448	528	528	528	528
36 / 914	60 / 1524	548	548	548	548
36 / 914	63 / 1600	566	566	566	566
36 / 914	66 / 1676	587	587	587	587
36 / 914	69 / 1753	609	609	609	609
36 / 914	72 / 1829	626	626	626	626
36 / 914	75 / 1905	648	648	648	648
36 / 914	78 / 1981	666	666	666	666
36 / 914	81 / 2057	686	686	686	686
36 / 914	84 / 2134	706	706	706	706
36 / 914	90 / 2286	747	n/a	747	n/a
36 / 914	96 / 2438	788	n/a	788	n/a
48 / 1219	24 / 610	n/a	358	358	n/a
48 / 1219	27 / 686	n/a	384	384	n/a
48 / 1219	30 / 762	n/a	411	411	n/a
48 / 1219	33 / 838	n/a	438	438	n/a
48 / 1219	36 / 914	n/a	465	465	n/a
48 / 1219	39 / 991	n/a	492	492	n/a
48 / 1219	42 / 1067	n/a	521	521	n/a
48 / 1219	45 / 1143	n/a	544	544	n/a
48 / 1219	48 / 1219	572	572	572	572
48 / 1219	51 / 1295	597	597	597	597
48 / 1219	54 / 1372	623	623	623	623
48 / 1219	57 / 1448	651	651	651	651
48 / 1219	60 / 1524	676	676	676	676
48 / 1219	63 / 1600	703	703	703	703
48 / 1219	66 / 1676	730	730	730	730
48 / 1219	69 / 1753	754	754	754	754
48 / 1219	72 / 1829	780	780	780	780
48 / 1219	75 / 1905	806	806	806	806
48 / 1219	78 / 1981	832	832	832	832
48 / 1219	81 / 2057	858	858	858	858
48 / 1219	84 / 2134	885	885	885	885
48 / 1219	90 / 2286	937	n/a	937	n/a
48 / 1219	96 / 2438	988	n/a	988	n/a

Pricing is continued on the following page.

J N W D S E

Double-Sided Rectangular Worksurface – Exposed Beam (Continued)

DIMENSIONS INCHES / MM

PRICING

D	W	GROMMETS – BOTH (GB)	GROMMET – CENTER (GC)	NONE (NN)	SQUARE CUT-OUT – JUSTIF. – ADJAC. OR OPP./GROMM. – CENTER (SA or SO) SQUARE CUT-OUT – OFF. LEFT OR RIGHT/GROMM. – CENTER (SL or SR)
60 / 1524	24 / 610	n/a	414	414	n/a
60 / 1524	27 / 686	n/a	448	448	n/a
60 / 1524	30 / 762	n/a	480	480	n/a
60 / 1524	33 / 838	n/a	514	514	n/a
60 / 1524	36 / 914	n/a	548	548	n/a
60 / 1524	39 / 991	n/a	580	580	n/a
60 / 1524	42 / 1067	n/a	612	612	n/a
60 / 1524	45 / 1143	n/a	645	645	n/a
60 / 1524	48 / 1219	676	676	676	676
60 / 1524	51 / 1295	708	708	708	708
60 / 1524	54 / 1372	739	739	739	739
60 / 1524	57 / 1448	773	773	773	773
60 / 1524	60 / 1524	805	805	805	805
60 / 1524	63 / 1600	836	836	836	836
60 / 1524	66 / 1676	868	868	868	868
60 / 1524	69 / 1753	901	901	901	901
60 / 1524	72 / 1829	935	935	935	935
60 / 1524	75 / 1905	966	966	966	966
60 / 1524	78 / 1981	999	999	999	999
60 / 1524	81 / 2057	1030	1030	1030	1030
60 / 1524	84 / 2134	1061	1061	1061	1061
60 / 1524	90 / 2286	n/a	n/a	n/a	n/a
60 / 1524	96 / 2438	n/a	n/a	n/a	n/a

		ACCESS DOOR – CENTER (AC)	ACCESS DOOR – JUSTIFIED – ADJACENT OR OPPOSITE (AA or AO)	ACCESS DOOR – OFFSET LEFT OR RIGHT (AL or AR)
48 / 1219	30 / 762	654	n/a	n/a
48 / 1219	33 / 838	n/a	682	n/a
48 / 1219	36 / 914	709	709	n/a
48 / 1219	39 / 991	n/a	735	n/a
48 / 1219	42 / 1067	763	763	n/a
48 / 1219	45 / 1143	n/a	789	n/a
48 / 1219	48 / 1219	n/a	817	n/a
48 / 1219	51 / 1295	n/a	842	n/a
48 / 1219	54 / 1372	n/a	867	n/a
48 / 1219	57 / 1448	n/a	894	n/a
48 / 1219	60 / 1524	n/a	919	919
48 / 1219	63 / 1600	n/a	947	947
48 / 1219	66 / 1676	973	973	973
48 / 1219	69 / 1753	n/a	999	999
48 / 1219	72 / 1829	1025	1025	1025
48 / 1219	75 / 1905	n/a	1051	1051
48 / 1219	78 / 1981	1078	1078	1078
48 / 1219	81 / 2057	n/a	1103	1103
48 / 1219	84 / 2134	1130	1130	1130
48 / 1219	90 / 2286	n/a	1181	1181
48 / 1219	96 / 2438	n/a	1233	1233

Pricing is continued on the following page.

JNWDSE
Double-Sided Rectangular Worksurface – Exposed Beam (Continued)

DIMENSIONS INCHES / MM		PRICING		
D	W	ACCESS DOOR – CENTER (AC) (CONTINUED)	ACCESS DOOR – JUSTIFIED – ADJACENT OR OPPOSITE (AA or AO) (CON'T)	ACCESS DOOR – OFFSET LEFT OR RIGHT (AL or AR) (CON'T)
60 / 1524	30 / 762	727	n/a	n/a
60 / 1524	33 / 838	n/a	759	n/a
60 / 1524	36 / 914	791	791	n/a
60 / 1524	39 / 991	n/a	824	n/a
60 / 1524	42 / 1067	856	856	n/a
60 / 1524	45 / 1143	n/a	887	n/a
60 / 1524	48 / 1219	n/a	919	n/a
60 / 1524	51 / 1295	n/a	952	n/a
60 / 1524	54 / 1372	n/a	984	n/a
60 / 1524	57 / 1448	n/a	1017	n/a
60 / 1524	60 / 1524	n/a	1050	1050
60 / 1524	63 / 1600	n/a	1082	1082
60 / 1524	66 / 1676	1114	1114	1114
60 / 1524	69 / 1753	n/a	1145	1145
60 / 1524	72 / 1829	1179	1179	1179
60 / 1524	75 / 1905	n/a	1209	1209
60 / 1524	78 / 1981	1241	1241	1241
60 / 1524	81 / 2057	n/a	1274	1274
60 / 1524	84 / 2134	1306	1306	1306
60 / 1524	90 / 2286	n/a	n/a	n/a
60 / 1524	96 / 2438	n/a	n/a	n/a

		ACCESS DOOR – JUSTIF. – OR OPP./GROMM. – CENTER (BA or BO) OR END ACCESS DOOR/GROMMET – CENTER (ER)	ACCESS DOOR – OFFSET LEFT OR RIGHT/GROMMET – CENTER (BL or BR)
48 / 1219	30 / 762	n/a	n/a
48 / 1219	33 / 838	n/a	n/a
48 / 1219	36 / 914	n/a	n/a
48 / 1219	39 / 991	n/a	n/a
48 / 1219	42 / 1067	n/a	n/a
48 / 1219	45 / 1143	n/a	n/a
48 / 1219	48 / 1219	817	n/a
48 / 1219	51 / 1295	842	n/a
48 / 1219	54 / 1372	867	n/a
48 / 1219	57 / 1448	894	n/a
48 / 1219	60 / 1524	919	919
48 / 1219	63 / 1600	947	947
48 / 1219	66 / 1676	973	973
48 / 1219	69 / 1753	999	999
48 / 1219	72 / 1829	1025	1025
48 / 1219	75 / 1905	1051	1051
48 / 1219	78 / 1981	1078	1078
48 / 1219	81 / 2057	1103	1103
48 / 1219	84 / 2134	1130	1130
48 / 1219	90 / 2286	n/a	n/a
48 / 1219	96 / 2438	n/a	n/a

Pricing is continued on the following page.

J N W D S E

Double-Sided Rectangular Worksurface – Exposed Beam (Continued)

DIMENSIONS
INCHES / MM

PRICING

D	W	ACCESS DOOR – JUSTIF. – OR OPP./GROMM. – CENTER (BA or BO) OR END ACCESS DOOR/GROMMET – CENTER (ER) (CON'T)	ACCESS DOOR – OFFSET LEFT OR RIGHT/GROMMET – CENTER (BL or BR) (CON'T)
60 / 1524	30 / 762	n/a	n/a
60 / 1524	33 / 838	n/a	n/a
60 / 1524	36 / 914	n/a	n/a
60 / 1524	39 / 991	n/a	n/a
60 / 1524	42 / 1067	n/a	n/a
60 / 1524	45 / 1143	n/a	n/a
60 / 1524	48 / 1219	919	n/a
60 / 1524	51 / 1295	952	n/a
60 / 1524	54 / 1372	984	n/a
60 / 1524	57 / 1448	1017	n/a
60 / 1524	60 / 1524	1050	1050
60 / 1524	63 / 1600	1082	1082
60 / 1524	66 / 1676	1114	1114
60 / 1524	69 / 1753	1145	1145
60 / 1524	72 / 1829	1179	1179
60 / 1524	75 / 1905	1209	1209
60 / 1524	78 / 1981	1241	1241
60 / 1524	81 / 2057	1274	1274
60 / 1524	84 / 2134	1306	1306
60 / 1524	90 / 2286	n/a	n/a
60 / 1524	96 / 2438	n/a	n/a

JNWDCN

Double-Sided Rectangular Worksurface – Cross Grain

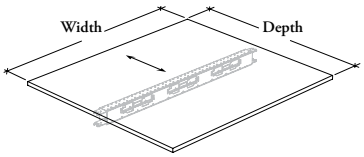

This worksurface with cross grain orientation provides a primary or secondary surface for two users in multiple applications.

WHAT'S INCLUDED
1 worksurface, 4 wire management clips, grommets or access doors (if specified) and cable trays (**not** included with None (NN) option).

WHAT'S EXCLUDED
Structural Beam, Chicago Structural Beam, Supports, Worksurface Reinforcement Channel, Cable Tray for Access Door and Square Grommet Cover.

NOTES
Power and Data Access options are not all available for every dimensions. Refer to specification software for available options.

When Power and Data Access option (GB, GC, SL, SR or SJ) is specified, the Access Door Finish (NA) must be specified.

When Power and Data Access option (AC or AJ) is specified, the Grommet Finish (NA) must be specified.

When Power and Data Access option (NN) is specified, the Access Door (NA) and Grommet (NA) Finishes must be specified.

PRODUCT OPTIONS

Depth	Width	Power and Data Access
36, 48, 60	24, 27, 30, 33, 36, 39, 42, 45, 48, 51, 54, 57, 60	**AC** Access Door – Center **AJ** Access Door – Justified **BJ** Access Door – Justified/Grommet – Center **ER** End Access Door/Grommet – Center **GB** Grommet – Both **GC** Grommets – Center **SL** Square Cut-Out – Offset Left/Grommet – Center **SR** Square Cut-Out – Offset Right/Grommet – Center **SJ** Square Cut-Out – Justified/Grommet – Center **NN** None (Shown)

SAMPLE ORDER CODE

JNWDCN 48	60	BJ

PRODUCT OPTIONS CONTINUED

Screen Mounting Holes	Worksurface Finish	User Edge Trim Style	Edge Trim Finish	Access Door Finish	Grommet Finish
W With Mounting Holes **N** No Mounting Holes	Foundation Laminate	**6** 3 mm Straight Trim **8** 1.5 mm Flat Trim	Edge Trim Colors	Foundation Mica Accent **NA** Not Applicable	Foundation Mica Accent **NA** Not Applicable

SAMPLE ORDER CODE

N	LW	6	ST	60	60

See Pricing on the following page.

JNWDCN

Double-Sided Rectangular Worksurface – Cross Grain (Continued)

DIMENSIONS INCHES / MM		PRICING			
D	W	GRNOMMETS – BOTH (GB)	GROMMET – CENTER (GC)	NONE (NN)	SQUARE CUT-OUT – OFFSET LEFT OR RIGHT/GROMM. – CENTER (SL or SR) SQUARE CUT-OUT – JUSTIFIED/GROMMET – CENTER (SJ)
36 / 914	24 / 610	n/a	302	302	n/a
36 / 914	27 / 686	n/a	324	324	n/a
36 / 914	30 / 762	n/a	345	345	n/a
36 / 914	33 / 838	n/a	362	362	n/a
36 / 914	36 / 914	n/a	383	383	n/a
36 / 914	39 / 991	n/a	405	405	n/a
36 / 914	42 / 1067	n/a	425	425	n/a
36 / 914	45 / 1143	n/a	445	445	n/a
36 / 914	48 / 1219	465	465	465	465
36 / 914	51 / 1295	485	485	485	485
36 / 914	54 / 1372	505	505	505	505
36 / 914	57 / 1448	528	528	528	528
36 / 914	60 / 1524	548	548	548	548
48 / 1219	24 / 610	n/a	358	358	n/a
48 / 1219	27 / 686	n/a	384	384	n/a
48 / 1219	30 / 762	n/a	411	411	n/a
48 / 1219	33 / 838	n/a	438	438	n/a
48 / 1219	36 / 914	n/a	465	465	n/a
48 / 1219	39 / 991	n/a	492	492	n/a
48 / 1219	42 / 1067	n/a	521	521	n/a
48 / 1219	45 / 1143	n/a	544	544	n/a
48 / 1219	48 / 1219	572	572	572	572
48 / 1219	51 / 1295	597	597	597	597
48 / 1219	54 / 1372	623	623	623	623
48 / 1219	57 / 1448	651	651	651	651
48 / 1219	60 / 1524	676	676	676	676
60 / 1524	24 / 610	n/a	414	414	n/a
60 / 1524	27 / 686	n/a	448	448	n/a
60 / 1524	30 / 762	n/a	480	480	n/a
60 / 1524	33 / 838	n/a	514	514	n/a
60 / 1524	36 / 914	n/a	548	548	n/a
60 / 1524	39 / 991	n/a	580	580	n/a
60 / 1524	42 / 1067	n/a	612	612	n/a
60 / 1524	45 / 1143	n/a	645	645	n/a
60 / 1524	48 / 1219	676	676	676	676
60 / 1524	51 / 1295	708	708	708	708
60 / 1524	54 / 1372	739	739	739	739
60 / 1524	57 / 1448	773	773	773	773
60 / 1524	60 / 1524	805	805	805	805

Pricing is continued on the following page.

J N W D C N

Double-Sided Rectangular Worksurface – Cross Grain (Continued)

DIMENSIONS INCHES / MM | **PRICING**

D	W	ACCESS DOOR – CENTER (AC)	ACCESS DOOR – JUSTIFIED (AJ)	ACCESS DOOR – JUSTIFIED/GROMMET – CENTER (BJ) OR END ACCESS DOOR/GROMMET – CENTER (ER)
48 / 1219	30 / 762	654	n/a	n/a
48 / 1219	33 / 838	n/a	682	n/a
48 / 1219	36 / 914	709	709	n/a
48 / 1219	39 / 991	n/a	735	n/a
48 / 1219	42 / 1067	763	763	n/a
48 / 1219	45 / 1143	n/a	789	n/a
48 / 1219	48 / 1219	n/a	817	817
48 / 1219	51 / 1295	n/a	842	842
48 / 1219	54 / 1372	n/a	867	867
48 / 1219	57 / 1448	n/a	894	894
48 / 1219	60 / 1524	n/a	919	919
60 / 1524	30 / 762	727	n/a	n/a
60 / 1524	33 / 838	n/a	759	n/a
60 / 1524	36 / 914	791	791	n/a
60 / 1524	39 / 991	n/a	824	n/a
60 / 1524	42 / 1067	856	856	n/a
60 / 1524	45 / 1143	n/a	887	n/a
60 / 1524	48 / 1219	n/a	919	919
60 / 1524	51 / 1295	n/a	952	952
60 / 1524	54 / 1372	n/a	984	984
60 / 1524	57 / 1448	n/a	1017	1017
60 / 1524	60 / 1524	n/a	1050	1050

J N W P S N
Peninsula Worksurface

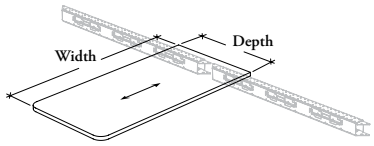

This Peninsula worksurface can be used in mulitple applications to create collaboration or meeting space.

WHAT'S INCLUDED
1 worksurface, 2 wire management clips, grommet or access door (if specified) and cable tray (**not** included with None (N) option).

WHAT'S EXCLUDED
Structural Beam, Chicago Structural Beam, Peninsula Support, Worksurface Reinforcement Channel, Cable Tray for Access Door and Square Grommet Cover.

NOTES
Power and Data Access options are not all available for every dimensions. Refer to specification software for available options.

Cannot be specified with User Edge Trim Style (8) when Curved Corner Detail (C) is specified.

When Power and Data Access option (G) is specified, the Access Door Finish (NA) must be specified.

When Power and Data Access option (A) is specified, the Grommet Finish (NA) must be specified.

When Power and Data Access option (S or N) is specified, the Access Door (NA) and Grommet (NA) Finishes must be specified.

PRODUCT OPTIONS

Depth	Width	Corner Detail	Power and Data Access	Screen Mounting Holes	Worksurface Finish	User Edge Trim Style	Edge Trim Finish	Access Door Finish	Grommet Finish
24, 30, 36	48, 54, 60, 66, 72, 78, 84	**C** Curved (Shown) **S** Standard	**A** Access Door **G** Grommet **S** Square Cut-Out **N** None (Shown)	**W** With Mounting Holes **N** No Mounting Holes	Foundation Laminate	**6** 3 mm Straight Trim **8** 1.5 mm Flat Trim	Edge Trim Colors	Foundation Mica Accent **NA** Not Applicable	Foundation Mica Accent **NA** Not Applicable

SAMPLE ORDER CODE

JNWPSN 24	48	S	G	N	LW	6	ST	60	60

DIMENSIONS
INCHES / MM

PRICING

D	W	STANDARD (S) Grommet (G)/Square Cut-Out (S)/ None Power & Data Access (N)	STANDARD (S) Access Door (A)	CURVED (C) Grommet (G)/Square Cut-Out (S)/ None Power & Data Access (N)	CURVED (C) Access Door (A)
24 / 610	48 / 1219	340	463	445	566
24 / 610	54 / 1372	369	491	487	610
24 / 610	60 / 1524	397	521	528	650
24 / 610	66 / 1676	425	548	566	689
24 / 610	72 / 1829	454	577	609	731
24 / 610	78 / 1981	480	604	648	770
24 / 610	84 / 2134	508	631	688	811
30 / 762	48 / 1219	392	514	523	645
30 / 762	54 / 1372	428	551	565	688
30 / 762	60 / 1524	463	585	612	734
30 / 762	66 / 1676	498	619	655	778
30 / 762	72 / 1829	531	653	702	824
30 / 762	78 / 1981	565	688	747	868
30 / 762	84 / 2134	600	723	791	913
36 / 914	48 / 1219	447	568	561	683
36 / 914	54 / 1372	487	610	612	734
36 / 914	60 / 1524	529	651	660	783
36 / 914	66 / 1676	568	690	709	831
36 / 914	72 / 1829	610	732	759	880
36 / 914	78 / 1981	648	770	807	930
36 / 914	84 / 2134	688	811	856	978

JNWPSE
Peninsula Worksurface – Exposed Beam

This Peninsula worksurface can be used in mulitple applications to create collaboration or meeting space. The width is adapted to expose the beam laterally.

WHAT'S INCLUDED
1 worksurface, 2 wire management clips, grommet or access door (if specified) and cable tray (**not** included with None (N) option).

WHAT'S EXCLUDED
Structural Beam, Chicago Structural Beam, Peninsula Support, Worksurface Reinforcement Channel, Cable Tray for Access Door and Square Grommet Cover.

NOTES
Power and Data Access options are not all available for every dimensions. Refer to specification software for available options.

Cannot be specified with User Edge Trim Style (8) when Curved Corner Detail (C) is specified.

When Power and Data Access option (G) is specified, the Access Door Finish (NA) must be specified.

When Power and Data Access option (A) is specified, the Grommet Finish (NA) must be specified.

When Power and Data Access option (S or N) is specified, the Access Door (NA) and Grommet (NA) Finishes must be specified.

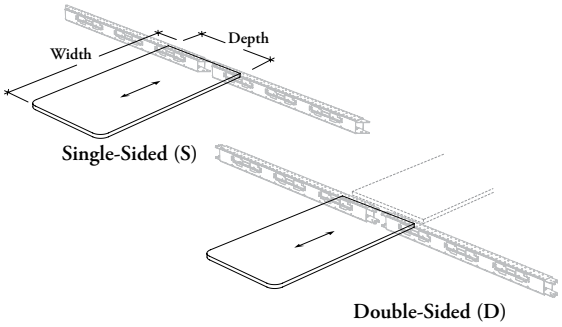

PRODUCT OPTIONS

Lateral Beam Configuration	Depth	Width	Corner Detail	Power and Data Access	Worksurface Finish	User Edge Trim Style	Edge Trim Finish	Access Door Finish	Grommet Finish
D Double-Sided Beam	24, 30, 36	48, 54, 60, 66, 72, 78, 84	**C** Curved (Shown)	**A** Access Door	Foundation Laminate	**6** 3 mm Straight Trim	Edge Trim Colors	Foundation	Foundation
S Single-Sided Beam			**S** Standard	**G** Grommet		**8** 1.5 mm Flat Trim		Mica	Mica
				S Square Cut-Out				Accent	Accent
				N None (Shown)				**NA** Not Applicable	**NA** Not Applicable

SAMPLE ORDER CODE

JNWPSE D	24	48	S	G	LW	6	ST	NA	60

DIMENSIONS INCHES / MM

PRICING

D	W	STANDARD (S) Grommet (G)/Square Cut-Out (S)/ None Power & Data Access (N)	STANDARD (S) Access Door (A)	CURVED (C) Grommet (G)/Square Cut-Out (S)/ None Power & Data Access (N)	CURVED (C) Access Door (A)
24 / 610	48 / 1219	340	463	445	566
24 / 610	54 / 1372	369	491	487	610
24 / 610	60 / 1524	397	521	528	650
24 / 610	66 / 1676	425	548	566	689
24 / 610	72 / 1829	454	577	609	731
24 / 610	78 / 1981	480	604	648	770
24 / 610	84 / 2134	508	631	688	811
30 / 762	48 / 1219	392	514	523	645
30 / 762	54 / 1372	428	551	565	688
30 / 762	60 / 1524	463	585	612	734
30 / 762	66 / 1676	498	619	655	778
30 / 762	72 / 1829	531	653	702	824
30 / 762	78 / 1981	565	688	747	868
30 / 762	84 / 2134	600	723	791	913
36 / 914	48 / 1219	447	568	561	683
36 / 914	54 / 1372	487	610	612	734
36 / 914	60 / 1524	529	651	660	783
36 / 914	66 / 1676	568	690	709	831
36 / 914	72 / 1829	610	732	759	880
36 / 914	78 / 1981	648	770	807	930
36 / 914	84 / 2134	688	811	856	978

J N W P C N

Peninsula Worksurface – Cross Grain

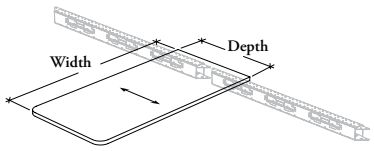

This Peninsula Worksurface with Cross Grain orientation can be used in mulitple applications to create collaboration or meeting space.

WHAT'S INCLUDED
1 worksurface, 2 wire management clips, grommet or access door (if specified) and cable tray (**not** included with None (N) option).

WHAT'S EXCLUDED
Structural Beam, Chicago Structural Beam, Peninsula Support, Worksurface Reinforcement Channel, Cable Tray for Access Door and Square Grommet Cover.

NOTES
Power and Data Access options are not all available for every dimensions. Refer to specification software for available options.

Cannot be specified with User Edge Trim Style (8) when Curved Corner Detail (C) is specified.

When Power and Data Access option (G) is specified, the Access Door Finish (NA) must be specified.

When Power and Data Access option (A) is specified, the Grommet Finish (NA) must be specified.

When Power and Data Access option (S or N) is specified, the Access Door (NA) and Grommet (NA) Finishes must be specified.

PRODUCT OPTIONS

Depth	Width	Corner Detail	Power and Data Access	Screen Mounting Holes	Worksurface Finish	User Edge Trim Style	Edge Trim Finish	Access Door Finish	Grommet Finish
24, 30, 36	48, 54, 60	**C** Curved (Shown) **S** Standard	**A** Access Door **G** Grommet **S** Square Cut-Out **N** None (Shown)	**W** With Mounting Holes **N** No Mounting Holes	Foundation Laminate	**6** 3 mm Straight Trim **8** 1.5 mm Flat Trim	Edge Trim Colors	Foundation Mica Accent **NA** Not Applicable	Foundation Mica Accent **NA** Not Applicable

SAMPLE ORDER CODE

JNWPCN 24	48	S	G	N	LW	6	ST	NA	60

DIMENSIONS INCHES / MM

PRICING

		STANDARD (S)		CURVED (C)	
		Grommet (G)/Square Cut-Out (S)/ None Power & Data Access (N)		Grommet (G)/Square Cut-Out (S)/ None Power & Data Access (N)	
D	W		Access Door (A)		Access Door (A)
24 / 610	48 / 1219	340	463	445	566
24 / 610	54 / 1372	369	491	487	610
24 / 610	60 / 1524	397	521	528	650
30 / 762	48 / 1219	392	514	523	645
30 / 762	54 / 1372	428	551	565	688
30 / 762	60 / 1524	463	585	612	734
36 / 914	48 / 1219	447	568	561	683
36 / 914	54 / 1372	487	610	612	734
36 / 914	60 / 1524	529	651	660	783

JNWPCE
Peninsula Worksurface – Cross Grain – Exposed Beam

This Peninsula Worksurface with Cross Grain orientation can be used in mulitple applications to create collaboration or meeting space. The width is adapted to expose the beam laterally.

WHAT'S INCLUDED
1 worksurface, 2 wire management clips, grommet (if specified) and cable tray (**not** included with None (N) option).

WHAT'S EXCLUDED
Structural Beam, Chicago Structural Beam, Peninsula Support, Worksurface Reinforcement Channel, Cable Tray for Access Door and Square Grommet Cover.

NOTES
Power and Data Access options are not all available for every dimensions. Refer to specification software for available options.

Cannot be specified with User Edge Trim Style (8) when Curved Corner Detail (C) is specified.

When Power and Data Access option (G) is specified, the Access Door Finish (NA) must be specified.

When Power and Data Access option (A) is specified, the Grommet Finish (NA) must be specified.

When Power and Data Access option (S or N) is specified, the Access Door (NA) and Grommet (NA) Finishes must be specified.

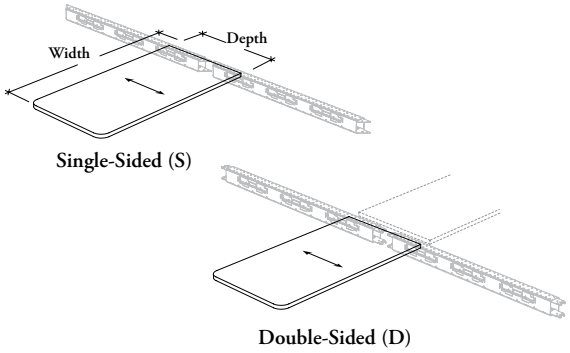

PRODUCT OPTIONS

Lateral Beam Configuration	Depth	Width	Corner Detail	Power and Data Access	Worksurface Finish	User Edge Trim Style	Edge Trim Finish	Access Door Finish	Grommet Finish
D Double-Sided Beam **S** Single-Sided Beam	24, 30, 36	48, 54, 60	**C** Curved (Shown) **S** Standard	**A** Access Door **G** Grommet **S** Square Cut-Out **N** None (Shown)	Foundation Laminate	**6** 3 mm Straight Trim **8** 1.5 mm Flat Trim	Edge Trim Colors	Foundation Mica Accent **NA** Not Applicable	Foundation Mica Accent **NA** Not Applicable

SAMPLE ORDER CODE

JNWPCE D	24	48	S	G	LW	6	ST	NA	60

DIMENSIONS
INCHES / MM

PRICING

D	W	STANDARD (S) Grommet (G)/Square Cut-Out (S)/ None Power & Data Access (N)	STANDARD (S) Access Door (A)	CURVED (C) Grommet (G)/Square Cut-Out (S)/ None Power & Data Access (N)	CURVED (C) Access Door (A)
24 / 610	48 / 1219	340	463	445	566
24 / 610	54 / 1372	369	491	487	610
24 / 610	60 / 1524	397	521	528	650
30 / 762	48 / 1219	392	514	523	645
30 / 762	54 / 1372	428	551	565	688
30 / 762	60 / 1524	463	585	612	734
36 / 914	48 / 1219	447	568	561	683
36 / 914	54 / 1372	487	610	612	734
36 / 914	60 / 1524	529	651	660	783

J N W P H
High Peninsula Worksurface

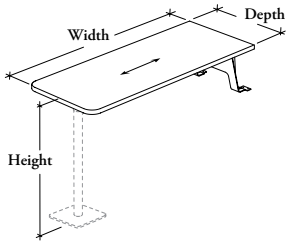

High Peninsula Worksurface is installed directly on structural beam and allows collaboration in standing-height position.

WHAT'S INCLUDED
1 worksurface, 2 wire management clips, grommet (if specified) and cable tray (**not** included with None (N) option).

WHAT'S EXCLUDED
Structural Beam, Chicago Structural Beam, Peninsula Monopod Base – Round, Worksurface Reinforcement Channel and Square Grommet Cover.

NOTES
Power and Data Access options are not all available for every dimensions. Refer to specification software for available options.

Cannot be specified with User Edge Trim Style (8) when Curved Corner Detail (C) is specified.

When Power and Data Access option (S or N) is specified, the Grommet (NA) Finish must be specified.

PRODUCT OPTIONS

Depth	Width	Height	Corner Detail	Power and Data Access	Worksurface Finish	User Edge Trim Style	Edge Trim Finish	Mounting Bracket Finish	Grommet Finish
24, 30, 36	48, 54, 60, 66, 72, 78, 84	36, 42	**C** Curved (Shown) **S** Standard	**G** Grommet **S** Square Cut-Out **N** None (Shown)	Foundation Laminate	**6** 3 mm Straight Trim **8** 1.5 mm Flat Trim	Edge Trim Colors	Foundation Mica Accent	Foundation Mica Accent **NA** Not Applicable

SAMPLE ORDER CODE

JNWPH 24	48	36	S	G	LW	6	ST	60	60

DIMENSIONS INCHES / MM / **PRICING**

D	W	H	STANDARD (S)	CURVED (C)
24 / 610	48 / 1219	36 / 914	558	661
24 / 610	54 / 1372	36 / 914	585	704
24 / 610	60 / 1524	36 / 914	614	742
24 / 610	66 / 1676	36 / 914	643	784
24 / 610	72 / 1829	36 / 914	672	825
24 / 610	78 / 1981	36 / 914	699	864
24 / 610	84 / 2134	36 / 914	728	906
30 / 762	48 / 1219	36 / 914	610	738
30 / 762	54 / 1372	36 / 914	646	783
30 / 762	60 / 1524	36 / 914	680	828
30 / 762	66 / 1676	36 / 914	712	873
30 / 762	72 / 1829	36 / 914	748	916
30 / 762	78 / 1981	36 / 914	783	964
30 / 762	84 / 2134	36 / 914	817	1009
36 / 914	48 / 1219	36 / 914	664	778
36 / 914	54 / 1372	36 / 914	704	828
36 / 914	60 / 1524	36 / 914	746	878
36 / 914	66 / 1676	36 / 914	786	927
36 / 914	72 / 1829	36 / 914	826	976
36 / 914	78 / 1981	36 / 914	864	1025
36 / 914	84 / 2134	36 / 914	906	1073

DIMENSIONS INCHES / MM / **PRICING**

D	W	H	STANDARD (S)	CURVED (C)
24 / 610	48 / 1219	42 / 1067	604	708
24 / 610	54 / 1372	42 / 1067	630	749
24 / 610	60 / 1524	42 / 1067	659	790
24 / 610	66 / 1676	42 / 1067	688	829
24 / 610	72 / 1829	42 / 1067	715	870
24 / 610	78 / 1981	42 / 1067	742	911
24 / 610	84 / 2134	42 / 1067	773	951
30 / 762	48 / 1219	42 / 1067	654	784
30 / 762	54 / 1372	42 / 1067	690	828
30 / 762	60 / 1524	42 / 1067	727	876
30 / 762	66 / 1676	42 / 1067	761	918
30 / 762	72 / 1829	42 / 1067	793	964
30 / 762	78 / 1981	42 / 1067	828	1010
30 / 762	84 / 2134	42 / 1067	861	1056
36 / 914	48 / 1219	42 / 1067	709	825
36 / 914	54 / 1372	42 / 1067	749	876
36 / 914	60 / 1524	42 / 1067	791	925
36 / 914	66 / 1676	42 / 1067	831	973
36 / 914	72 / 1829	42 / 1067	872	1021
36 / 914	78 / 1981	42 / 1067	911	1070
36 / 914	84 / 2134	42 / 1067	951	1118

JNWPGN

Writable Glass Peninsula Worksurface – Worksurface Connected

This Writable Glass Worksurface can be used in mulitple applications to engaged collaboration or meeting space.

WHAT'S INCLUDED

1 writable glass worksurface with metal tapered edge, 1 table companion marker kit, 2 wire management clips, 1 cable tray (**not** included with None (N) option), mounting bracket and hardware.

WHAT'S EXCLUDED

Structural Beam, Chicago Structural Beam, Peninsula Supports, Worksurface Reinforcement Channel and Square Grommet Cover.

NOTES

Only available with curved corner detail.

Refer to the Application Guide for compatibility and specification.

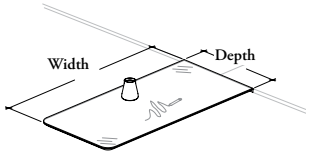

PRODUCT OPTIONS

Depth	Width	Cut-Out Style	Companion Marker Kit	Worksurface Finish	Metal Edge Finish	Companion Finish
24, 30, 36	48, 54, 60, 66, 72, 78, 84	**S** Square Cut-Out **N** None (Shown)	**K** With Companion Kit (Shown)	Back-Painted	Foundation Accent Mica	Foundation Accent Mica

SAMPLE ORDER CODE

JNWPGN 24	60	N	K	K1	60	60

DIMENSIONS INCHES / MM

D	W	PRICING
24 / 610	48 / 1219	1553
24 / 610	54 / 1372	1653
24 / 610	60 / 1524	1770
24 / 610	66 / 1676	1887
24 / 610	72 / 1829	2006
24 / 610	78 / 1981	2122
24 / 610	84 / 2134	2240
30 / 762	48 / 1219	1727
30 / 762	54 / 1372	1865
30 / 762	60 / 1524	2002
30 / 762	66 / 1676	2140
30 / 762	72 / 1829	2278
30 / 762	78 / 1981	2415
30 / 762	84 / 2134	2552
36 / 914	48 / 1219	1916
36 / 914	54 / 1372	2073
36 / 914	60 / 1524	2232
36 / 914	66 / 1676	2391
36 / 914	72 / 1829	2549
36 / 914	78 / 1981	2706
36 / 914	84 / 2134	2864

J N W P G E

Writable Glass Peninsula Worksurface – Exposed Beam

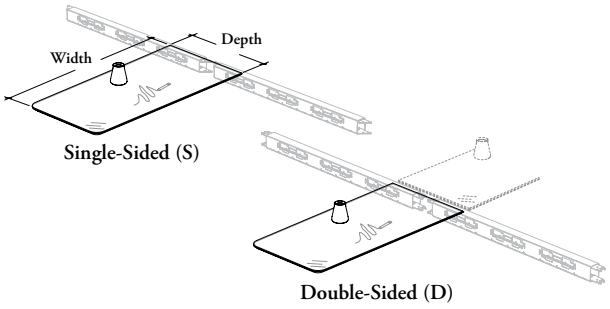

This Writable Glass Worksurface can be used in mulitple applications to engaged collaboration or meeting space. The width is adapted to expose the beam laterally.

WHAT'S INCLUDED

1 writable glass worksurface with metal tapered edge, 1 table companion marker kit, 2 wire management clips, 1 cable tray (**not** included with None (N) option), mounting bracket and hardware.

WHAT'S EXCLUDED

Structural Beam, Chicago Structural Beam, Peninsula Supports, Worksurface Reinforcement Channel and Square Grommet Cover.

NOTES

Only available with curved corner detail.

Refer to the Application Guide for compatibility and specification.

PRODUCT OPTIONS

Lateral Beam Configuration	Depth	Width	Cut-Out Style	Companion Marker Kit	Worksurface Finish	Metal Edge Finish	Companion Finish
D Double-Sided Beam **S** Single-Sided Beam	24, 30, 36	48, 54, 60, 66, 72, 78, 84	**S** Square Cut-Out **N** None (Shown)	**K** With Companion Kit (Shown)	Back-Painted	Foundation Accent Mica	Foundation Accent Mica

SAMPLE ORDER CODE

JNWPGE D	24	48	S	K	K1	60	60

DIMENSIONS INCHES / MM

PRICING

D	W	
24 / 610	48 / 1219	1553
24 / 610	54 / 1372	1653
24 / 610	60 / 1524	1770
24 / 610	66 / 1676	1887
24 / 610	72 / 1829	2006
24 / 610	78 / 1981	2122
24 / 610	84 / 2134	2240
30 / 762	48 / 1219	1727
30 / 762	54 / 1372	1865
30 / 762	60 / 1524	2002
30 / 762	66 / 1676	2140
30 / 762	72 / 1829	2278
30 / 762	78 / 1981	2415
30 / 762	84 / 2134	2552
36 / 914	48 / 1219	1916
36 / 914	54 / 1372	2073
36 / 914	60 / 1524	2232
36 / 914	66 / 1676	2391
36 / 914	72 / 1829	2549
36 / 914	78 / 1981	2706
36 / 914	84 / 2134	2864

JNWDG
Double-Sided Writable Glass Worksurface

This Writable Glass Worksurface provides an engaged collaborative space between fixed workstations.

WHAT'S INCLUDED
1 writable glass worksurface with metal tapered edge, 1 table companion marker kit, mounting bracket and hardware.

WHAT'S EXCLUDED
Structural Beam, Chicago Structural Beam and Structural Leg.

NOTES
Refer to the Application Guide for compatibility and specification.

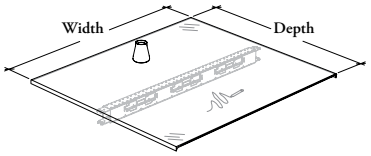

PRODUCT OPTIONS

Depth	Width	Companion Marker Kit	Worksurface Finish	Metal Edge Finish	Companion Finish
36, 48, 60	24, 30, 36, 42, 48, 54, 60, 66, 72	**K** With Companion Kit (Shown)	Back-Painted	Foundation Accent Mica	Foundation Accent Mica

SAMPLE ORDER CODE

JNWDG 48	66	K	K1	60	60

DIMENSIONS INCHES / MM

PRICING

D	W	
36 / 914	24 / 610	440
36 / 914	30 / 762	538
36 / 914	36 / 914	640
36 / 914	42 / 1067	738
36 / 914	48 / 1219	838
36 / 914	54 / 1372	938
36 / 914	60 / 1524	1038
36 / 914	66 / 1676	1138
36 / 914	72 / 1829	1238
48 / 1219	24 / 610	575
48 / 1219	30 / 762	706
48 / 1219	36 / 914	838
48 / 1219	42 / 1067	970
48 / 1219	48 / 1219	1102
48 / 1219	54 / 1372	1234
48 / 1219	60 / 1524	1365
48 / 1219	66 / 1676	1498
48 / 1219	72 / 1829	1629
60 / 1524	24 / 610	710
60 / 1524	30 / 762	873
60 / 1524	36 / 914	1038
60 / 1524	42 / 1067	1202
60 / 1524	48 / 1219	1365

J N W F G

Writable Glass Worksurface – Center Beam-Mounted

This Writable Glass Worksurface provides an engaged collaborative space between height-adjustable workstations or in collaborative area.

WHAT'S INCLUDED
1 writable glass worksurface with metal tapered edge, 1 table companion marker kit, mounting bracket and hardware.

WHAT'S EXCLUDED
Structural Beam, Chicago Structural Beam, Structural Leg – Fence and Structural Beam Cover – Top.

NOTES
Only available with curved corner detail.

Refer to the Application Guide for compatibility and specification.

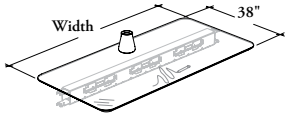

PRODUCT OPTIONS

Depth	Width	Companion Marker Kit	Worksurface Finish	Metal Edge Finish	Companion Finish
38	48, 54, 60, 66, 72, 78, 84, 90	**K** With Companion Kit (Shown)	Back-Painted	Foundation Accent Mica	Foundation Accent Mica

SAMPLE ORDER CODE

JNWFG 38	72	K	K1	60	60

DIMENSIONS INCHES / MM

D	W
38 / 965	48 / 1219
38 / 965	54 / 1372
38 / 965	60 / 1524
38 / 965	66 / 1676
38 / 965	72 / 1829
38 / 965	78 / 1981
38 / 965	84 / 2134
38 / 965	90 / 2286

PRICING

2117
2282
2449
2612
2777
2943
3106
3271

JNWRC
Worksurface Reinforcement Channel

The Worksurface Reinforcement Channel adds rigidity to worksurfaces.

WHAT'S INCLUDED
1 reinforced channel and attachement hardware.

NOTES
Finished in Recycled Paint.

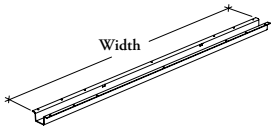

PRODUCT OPTIONS

Width

30, 36, 42, 48, 54, 60, 66, 72, 78, 84

SAMPLE ORDER CODE

JNWRC 72

DIMENSIONS INCHES / MM	PRICING
W	
30 / 762	50
36 / 914	53
42 / 1067	56
48 / 1219	59
54 / 1372	61
60 / 1524	64
66 / 1676	66
72 / 1829	71
78 / 1981	79
84 / 2134	80

J N W B B
Beam-Mounted Worksurface Brackets

Brackets are used to attach a worksurface on a structural beam. This item must be specified only as a replacement part or when the structural beams are not specified with worksurface brackets.

WHAT'S INCLUDED
2 worksurface brackets and attachement hardware.

NOTES
Finished in Black.

Single-Sided (S)

Double-Sided (D)

PRODUCT OPTIONS

Worksurface Configuration
D Double-Sided
S Single-Sided

SAMPLE ORDER CODE

JNWBB S

J N W F P
Linking Plates

The Linking Plates are used to maintain alignment of worksurfaces.

WHAT'S INCLUDED
2 linking plates and attachement hardware.

NOTES
Finished in Black.

JNWBB
BEAM-MOUNTED WORKSURFACE BRACKETS

Price
20

JNWFP
LINKING PLATES

Price
19

height-adjustability

height-adjustability product map

J N H B Height-Adjustable Run-Off – Bevel Base

Page 1010

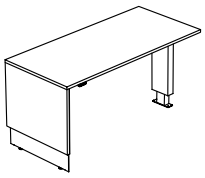

J N H S C Storage Cabinet for Height-Adjustable Run-Off

Page 1012

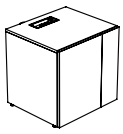

J N X R M H hiSpace Quick Connect Height-Adjustable Mechanism – Rectangular

Page 1014

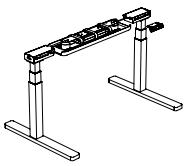

J N X R W hiSpace Rectangular Worksurface with Quick Connect Kit

Page 1016

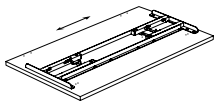

J N X C R W hiSpace Rectangular Worksurface with Quick Connect Kit – Cross Grain

Page 1018

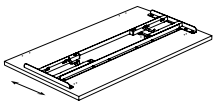

J N X H hiSpace Quick Connect Height-Adjustable Mechanism – 120°

Page 1020

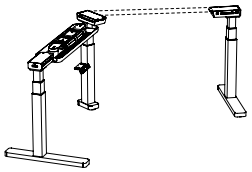

J N X V hiSpace 120° Worksurface with Quick Connect Kit

Page 1022

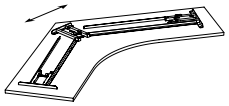

J N H T R F Navigate Height-Adjustable Base – Rectangular

Page 1024

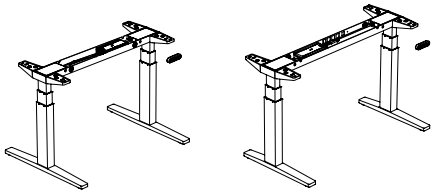

height-adjustability product map

J N H W R F Rectangular Worksurface for Navigate Base

Page 1028

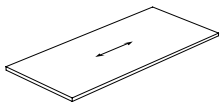

J N H C W R F Rectangular Worksurface for Navigate Base – Cross Grain

Page 1030

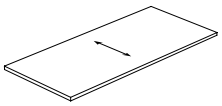

J N T V Navigate Height-Adjustable Base – 120°

Page 1032

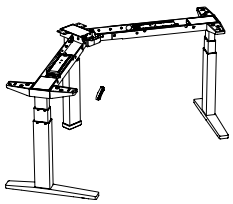

J N H V 120° Worksurface for Navigate Base

Page 1034

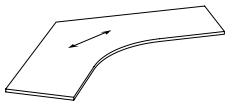

J N H C A Height-Adjustable Table Caster Kit

Page 1036

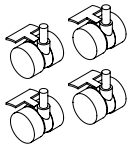

J N H E A Vertical Wire Carrier

Page 1037

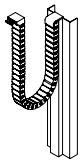

J N H B

Height-Adjustable Run-Off – Bevel Base

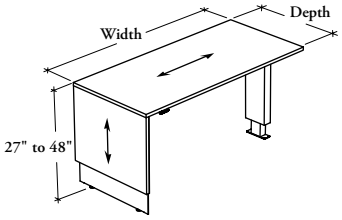

This run-off allows to work at seated and standing positions. It must only be mounted on a Storage Cabinet for Height-Adjustable Run-Off (JNHSC) at one end and is supported by a single support at the other end. The storage (JNHSC) is mandatory under this desk and must be specified separately.

WHAT'S INCLUDED
1 worksurface, 1 height-adjustable bevel base with levelers, 1 height-adjustable mechanism, 1 control box, 1 power tray, 1 cable tray, 2 wire management clips, 1 reinforcing bar, 1 worksurface grommet (as specified), 1 switch for height-adjustable mechanism (as specified) and mounting hardware.

WHAT'S EXCLUDED
Storage Cabinet for Height-Adjustable Run-Off and Suspended Modesty Panel.

NOTES
Refer to application guide.

PRODUCT OPTIONS

Range	Lateral Beam Config.	Depth	Width	Grommet Option	Orientation	Switch	
E Extended Range Electric – 27" to 48"	**D** Double-Sided Beam **S** Single-Sided Beam	24, 30	60, 66, 72, 78, 84	**G** Grommet – Center **H** Grommet – Offset **S** Square Cut-Out and Grommet – Center **T** Square Cut-Out and Grommet – Offset **N** None (Shown)	**L** Left Handed (Shown) **R** Right Handed	**D** Display with Up/Down Memory **F** Toggle Up/Down – Platinum **G** Toggle Up/Down – Crisp Grey **H** Toggle Up/Down – Anthracite **M** Display Toggle with Memory – Platinum	**N** Display Toggle with Memory – Crisp Grey **O** Display Toggle with Memory – Anthracite

SAMPLE ORDER CODE

JNHB E	S	24	60	N	L	D

PRODUCT OPTIONS CONTINUED

Worksurface Finish	User Edge Trim Style	Edge Trim Finish	End Panel Finish	Base Finish	Grommet Finish (If Applicable)
Foundation Laminate	**6** 3mm Straight Trim **8** 1.5 mm Flat Trim	Edge Trim Colors	Source Laminate	Foundation Mica Coordinate Colors	Foundation Mica Accent **NA** Not Applicable

SAMPLE ORDER CODE CONTINUED

RV	6	SS	XG	83	NA

See Pricing on the following page.

J N H B

Height-Adjustable Run-Off – Bevel Base (Continued)

DIMENSIONS INCHES / MM		PRICING	UPCHARGE
D	W	Foundation Laminate	Display with Up/Down Memory (D) Display Toogle with Memory (M, N or O)
24 / 610	60 / 1524	3906	131
24 / 610	66 / 1676	3934	131
24 / 610	72 / 1829	3965	131
24 / 610	78 / 1981	3995	131
24 / 610	84 / 2134	4022	131
30 / 762	60 / 1524	4010	131
30 / 762	66 / 1676	4044	131
30 / 762	72 / 1829	4082	131
30 / 762	78 / 1981	4118	131
30 / 762	84 / 2134	4148	131

EZ compatible

J N H S C

Storage Cabinet for Height-Adjustable Run-Off

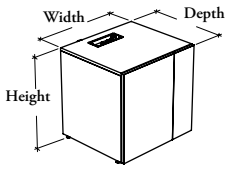

This storage is mandatory to support Height-Adjustable Run-Off – Bevel Base (JNHB) and provides additional storage.

WHAT'S INCLUDED
1 case with levelers, 1 cable pass-through ring and mounting hardware.

WHAT'S EXCLUDED
Height-Adjustable Run-Off – Bevel Base.

NOTES
This storage is **not** lockable.

Refer to application guide.

PRODUCT OPTIONS

Beam Configuration	Depth	Width	Height	Orientation	Front Finish	Edge Trim Finish	Case Finish
D Double-Sided	18, 24	24, 30	24	**L** Left	Source Laminate	Edge Trims Colors	Source Laminate
S Single-Sided				**R** Right (Shown)	Foundation Laminate		

SAMPLE ORDER CODE

JNHSC D	24	24	24	R	3D	4D	3D

DIMENSIONS
INCHES / MM

D	W	H
18 / 457	24 / 610	24 / 610
18 / 457	30 / 762	24 / 610
24 / 610	24 / 610	24 / 610
24 / 610	30 / 762	24 / 610

PRICING

FRONT FINISH	
Source Laminate	Foundation Laminate
1042	1099
1114	1186
1132	1190
1216	1288

J N X R M H

hiSpace Quick Connect Height-Adjustable Mechanism – Rectangular

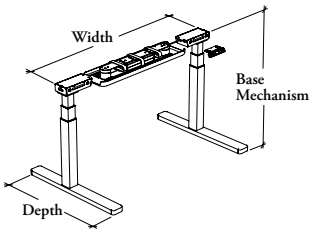

C-Legs (CC)

This base is must be paired with hiSpace Rectangular Worksurfaces with Quick Connect Kit (JNXRW or JNXCRW) to create a complete freestanding hiSpace rectangular height-adjustable table.

WHAT'S INCLUDED

1 pair of feet with levelers, 1 pair of leg columns, 2 height-adjustable mechanisms, 1 powerbar with 10' powerbar cord (as specified), mounting hardware and 1 power pak (as specified) with accessories listed below:

Knocked-Down Power Pak includes: 1 control box, 1 switch, 1 15' power cord, 2 motor cables and 4 wire management clips.

Pre-Assembled Power Pak – Cable Organizer with Felt Cover: 1 cable organizer with felt cover, 1 pre-installed control box, 1 switch, 1 15' power cord and 2 motor cables.

WHAT'S EXCLUDED

hiSpace Rectangular Worksurface with Quick Connect Kit, hiSpace Rectangular Worksurface with Quick Connect Kit – Cross Grain and Vertical Wire Carrier.

NOTES

Meets ANSI/BIFMA testing requirements.

Includes a 240V universal control box.

Standby power consumption of 0.2W.

Pre-Assembled Power Pak – Cable Organizer with Felt Cover (P) **is not** available with 46" and 49" widths combined with Standard Width (S) configuration.

Refer to application guide.

PRODUCT OPTIONS

Leg Application	Base Mechanism	Depth	Width	Width Configuration
CC C-Legs	**9E** Extended Electric – Extended (22.6" – 48.7") **9U** Extended Electric – with Riser (25" – 51.1")	23, 29	46, 49, 52, 55, 58, 61, 64, 67, 70	**S** Standard Width **U** User Optimized Width (Accessory Restriction)

SAMPLE ORDER CODE

JNXRMH CC	9E	23	52	U

PRODUCT OPTIONS CONTINUED

Powerbar	Power Pak	Switch	Base Finish
E External Powerbar **N** None	**K** Knocked-Down Power Pak **P** Pre-Assembled Power Pak – Cable Organizer with Felt Cover (Shown)	**A** Toggle Display with Memory **D** Display with Up/Down Memory	**52** Ebony **60** Platinum **83** Very White

SAMPLE ORDER CODE CONTINUED

N	P	D	83

See Pricing on the following page.

J N X R M H

hiSpace Quick Connect Height-Adjustable Mechanism – Rectangular (Continued)

C-LEGS (CC)

STANDARD WIDTH (S)

DIMENSIONS INCHES / MM		PRICING			
		NONE POWERBAR (N)		EXTERNAL POWERBAR (E)	
D	W	KNOCKED-DOWN – POWER PAK (K)	PRE-ASSEMBLED POWER PAK (P)	KNOCKED-DOWN – POWER PAK (K)	PRE-ASSEMBLED POWER PAK (P)
23 / 584	46 / 1168	1315	n/a	1494	n/a
23 / 584	49 / 1245	1315	n/a	1494	n/a
23 / 584	52 / 1321	1315	1463	1494	1641
23 / 584	55 / 1397	1315	1463	1494	1641
23 / 584	58 / 1473	1315	1463	1494	1641
23 / 584	61 / 1549	1315	1463	1494	1641
23 / 584	64 / 1626	1315	1463	1494	1641
23 / 584	67 / 1702	1315	1463	1494	1641
23 / 584	70 / 1778	1315	1463	1494	1641
29 / 737	46 / 1168	1315	n/a	1494	n/a
29 / 737	49 / 1245	1315	n/a	1494	n/a
29 / 737	52 / 1321	1315	1463	1494	1641
29 / 737	55 / 1397	1315	1463	1494	1641
29 / 737	58 / 1473	1315	1463	1494	1641
29 / 737	61 / 1549	1315	1463	1494	1641
29 / 737	64 / 1626	1315	1463	1494	1641
29 / 737	67 / 1702	1315	1463	1494	1641
29 / 737	70 / 1778	1315	1463	1494	1641

USER OPTIMIZED WIDTH (U)

		NONE POWERBAR (N)		EXTERNAL POWERBAR (E)	
		KNOCKED-DOWN – POWER PAK (K)	PRE-ASSEMBLED POWER PAK (P)	KNOCKED-DOWN – POWER PAK (K)	PRE-ASSEMBLED POWER PAK (P)
23 / 584	46 / 1168	1315	1463	1494	1641
23 / 584	49 / 1245	1315	1463	1494	1641
23 / 584	52 / 1321	1315	1463	1494	1641
23 / 584	55 / 1397	1315	1463	1494	1641
23 / 584	58 / 1473	1315	1463	1494	1641
23 / 584	61 / 1549	1315	1463	1494	1641
23 / 584	64 / 1626	1315	1463	1494	1641
23 / 584	67 / 1702	1315	1463	1494	1641
23 / 584	70 / 1778	1315	1463	1494	1641
29 / 737	46 / 1168	1315	1463	1494	1641
29 / 737	49 / 1245	1315	1463	1494	1641
29 / 737	52 / 1321	1315	1463	1494	1641
29 / 737	55 / 1397	1315	1463	1494	1641
29 / 737	58 / 1473	1315	1463	1494	1641
29 / 737	61 / 1549	1315	1463	1494	1641
29 / 737	64 / 1626	1315	1463	1494	1641
29 / 737	67 / 1702	1315	1463	1494	1641
29 / 737	70 / 1778	1315	1463	1494	1641

J N X R W

hiSpace Rectangular Worksurface with Quick Connect Kit

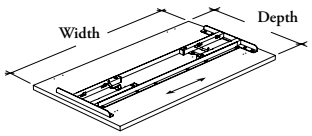

This worksurface is must be paired with hiSpace Quick Connect Height-Adjustable Mechanism – Rectangular (JNXRMH) to create a complete freestanding hiSpace rectangular height-adjustable table.

WHAT'S INCLUDED
1 rectangular worksurface with pre-installed connection kit (2 quick connect brackets with 2 reinforcing bars) and 4 single wire management clips.

WHAT'S EXCLUDED
hiSpace Quick Connect Height-Adjustable Mechanism – Rectangular.

NOTES
When Diamond Cut-Out – Center option (DC) is specified, 49" width is **not** available.

When Cut-Out Style (DL or DR) is specified, 46" width combined with 23" depth is **not** available.

When Curved (C) Corner Detail is specified, 1.5 mm Flat Trim Style (8) is **not** available.

Dimensions are actual width and actual depth.

PRODUCT OPTIONS

Leg Application	Depth	Width	Width Configuration	Corner Detail
CC C-Legs	23, 29	46, 49, 52, 55, 58, 61, 64, 67, 70	**S** Standard Width **U** User Optimized Width (Accessory Restriction)	**C** Curved **S** Standard (Shown)

SAMPLE ORDER CODE

JNXRW CC	29	58	S	S

PRODUCT OPTIONS CONTINUED

Cut-Out Style		Cable Management	Connection Kit	Worksurface Finish	Edge Trim Style	Edge Trim Finish	Connection Kit Finish
CL Diamond & Square Cut-Outs – Left **CR** Diamond & Square Cut-Outs – Right **DC** Diamond Cut-Out – Center **DL** Diamond Cut-Out – Left **DR** Diamond Cut-Out – Right	**NN** None (Shown) **SC** Square Cut-Out – Center **SL** Square Cut-Out – Left **SR** Square Cut-Out – Right	**C** Clips (4)	**P** Pre-Installed	Foundation Laminate	**6** 3 mm Straight Trim **8** 1.5 mm Flat Trim	Edge Trim Colors	**52** Ebony **60** Platinum **83** Very White

SAMPLE ORDER CODE CONTINUED

NN	C	P	LW	6	ST	60

See Pricing on the following page.

J N X R W

hiSpace RectangularWorksurface with Quick Connect Kit (Continued)

DIMENSIONS INCHES / MM		PRICING	
		C-LEGS (CC)	
		STANDARD WIDTH (S) OR USER OPTIMIAZED WIDTH (U)	
D	W	STANDARD (S)	CURVED (C)
23 / 584	46 / 1168	401	428
23 / 584	49 / 1245	413	442
23 / 584	52 / 1321	429	461
23 / 584	55 / 1397	442	473
23 / 584	58 / 1473	455	488
23 / 584	61 / 1549	471	505
23 / 584	64 / 1626	484	521
23 / 584	67 / 1702	499	534
23 / 584	70 / 1778	513	551
29 / 737	46 / 1168	448	478
29 / 737	49 / 1245	467	499
29 / 737	52 / 1321	484	517
29 / 737	55 / 1397	501	535
29 / 737	58 / 1473	521	556
29 / 737	61 / 1549	535	571
29 / 737	64 / 1626	554	590
29 / 737	67 / 1702	571	610
29 / 737	70 / 1778	588	626

J N X C R W

hiSpace Rectangular Worksurface with Quick Connect Kit – Cross Grain

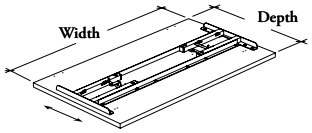

This worksurface is must be paired with hiSpace Quick Connect Height-Adjustable Mechanism – Rectangular (JNXRMH) to create a complete freestanding hiSpace rectangular height-adjustable table.

WHAT'S INCLUDED
1 rectangular worksurface with pre-installed connection kit (2 quick connect brackets with 2 reinforcing bars) and 4 single wire management clips.

WHAT'S EXCLUDED
hiSpace Quick Connect Height-Adjustable Mechanism – Rectangular.

NOTES
When Diamond Cut-Out – Center option (DC) is specified, 49" width is **not** available.

When Cut-Out Style (DL or DR) is specified, 46" width combined with 23" depth is **not** available.

When Curved (C) Corner Detail is specified, 1.5 mm Flat Trim Style (8) is **not** available.

Dimensions are actual width and actual depth.

PRODUCT OPTIONS

Leg Application	Depth	Width	Width Configuration	Corner Detail
CC C-Legs	23, 29	46, 49, 52, 55, 58	**S** Standard Width **U** User Optimized Width (Accessory Restriction)	**C** Curved **S** Standard (Shown)

SAMPLE ORDER CODE

JNXCRW CC	29	58	S	S

PRODUCT OPTIONS CONTINUED

Cut-Out Style		Cable Management	Connection Kit	Worksurface Finish	Edge Trim Style	Edge Trim Finish	Connection Kit Finish
CL Diamond & Square Cut-Outs – Left **CR** Diamond & Square Cut-Outs – Right **DC** Diamond Cut-Out – Center **DL** Diamond Cut-Out – Left **DR** Diamond Cut-Out – Right	**NN** None (Shown) **SC** Square Cut-Out – Center **SL** Square Cut-Out – Left **SR** Square Cut-Out – Right	**C** Clips (4)	**P** Pre-Installed	Foundation Laminate	**6** 3 mm Straight Trim **8** 1.5 mm Flat Trim	Edge Trim Colors	**52** Ebony **60** Platinum **83** Very White

SAMPLE ORDER CODE CONTINUED

NN	C	P	LW	6	ST	60

See Pricing on the following page.

J N X C R W

hiSpace Rectangular Worksurface with Quick Connect Kit – Cross Grain (Continued)

DIMENSIONS INCHES / MM		PRICING	
		C-LEGS (CC)	
		STANDARD WIDTH (S) OR USER OPTIMIAZED WIDTH (U)	
D	W	STANDARD (S)	CURVED (C)
23 / 584	46 / 1168	401	428
23 / 584	49 / 1245	413	442
23 / 584	52 / 1321	429	461
23 / 584	55 / 1397	442	473
23 / 584	58 / 1473	455	488
29 / 737	46 / 1168	448	478
29 / 737	49 / 1245	467	499
29 / 737	52 / 1321	484	517
29 / 737	55 / 1397	501	535
29 / 737	58 / 1473	521	556

J N X H

hiSpace Quick Connect Height-Adjustable Mechanism – 120°

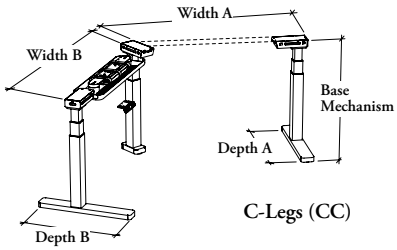

C-Legs (CC)

This base is must be paired with hiSpace 120° Worksurface with Quick Connect Kit (JNXV) to create a complete freestanding hiSpace 120° height-adjustable table.

WHAT'S INCLUDED

3 feet with levelers, 3 leg columns, 3 height-adjustable mechanisms, 1 powerbar with 10' powerbar cord (as specified), mounting hardware and 1 power pak (as specified) with accessories listed below:

Knocked-Down Power Pak includes: 1 control box, 1 switch, 1 15' power cord, 2 motor cables and 4 wire management clips.

Pre-Assembled Power Pak – Cable Organizer with Felt Cover: 1 cable organizer with felt cover, 1 pre-installed control box, 1 switch, 1 15' power cord and 2 motor cables.

WHAT'S EXCLUDED

hiSpace 120° Worksurface with Quick Connect Kit and Vertical Wire Carrier.

NOTES

Meets ANSI/BIFMA testing requirements.

Includes a 240V universal control box.

Standby power consumption of 0.2W.

The dimension specified with Depth B must be the same with Depth A.

The dimension specified with Width B must be the same with Width A.

Refer to application guide.

PRODUCT OPTIONS

Base Mechanism	Depth A	Depth B	Width A	Width B
9E Extended Electric – Extended (22.6" – 48.7") **9U** Extended Electric – with Riser (25" – 51.1")	23, 29	23, 29	43, 46, 49, 52, 55, 58	43, 46, 49, 52, 55, 58

SAMPLE ORDER CODE

JNXH 9E	23	23	52	52

PRODUCT OPTIONS CONTINUED

Width Configuration	Powerbar	Power Pak	Switch	Base Finish
S Standard Width	**E** External Powerbar **N** None	**K** Knocked-Down Power Pak **P** Pre-Assembled Power Pak – Cable Organizer with Felt Cover (Shown)	**A** Toggle Display with Memory **D** Display with Up/Down Memory	**52** Ebony **60** Platinum **83** Very White

SAMPLE ORDER CODE CONTINUED

S	N	P	D	83

See Pricing on the following page.

J N X H

hiSpace Quick Connect Height-Adjustable Mechanism – 120°(Continued)

DIMENSIONS – INCHES
FOR MM X BY 25.4

PRICING

				STANDARD WIDTH (S)			
				NONE POWERBAR (N)		EXTERNAL POWERBAR (E)	
Da	Db	Wa	Wb	KNOCKED-DOWN – POWER PAK (K)	PRE-ASSEMBLED POWER PAK (P)	KNOCKED-DOWN – POWER PAK (K)	PRE-ASSEMBLED POWER PAK (P)
23	23	43	43	2046	n/a	2226	n/a
23	23	46	46	2046	n/a	2226	n/a
23	23	49	49	2046	n/a	2226	n/a
23	23	52	52	2046	2192	2226	2372
23	23	55	55	2046	2192	2226	2372
23	23	58	58	2046	2192	2226	2372
29	29	43	43	2046	n/a	2226	n/a
29	29	46	46	2046	n/a	2226	n/a
29	29	49	49	2046	n/a	2226	n/a
29	29	52	52	2046	2192	2226	2372
29	29	55	55	2046	2192	2226	2372
29	29	58	58	2046	2192	2226	2372

J N X V

hiSpace 120° Worksurface with Quick Connect Kit

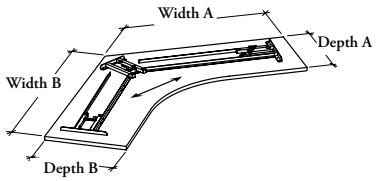

This worksurface is must be paired with hiSpace Quick Connect Height-Adjustable Mechanism – 120° (JNXH) to create a complete freestanding hiSpace 120° height-adjustable table.

WHAT'S INCLUDED
1 120° worksurface with pre-installed connection kit (3 quick connect brackets with 4 reinforcing bars) and 6 single wire management clips.

WHAT'S EXCLUDED
hiSpace Quick Connect Height-Adjustable Mechanism – 120°.

NOTES
The dimension specified with Depth B must be the same with Depth A.

The dimension specified with Width B must be the same with Width A.

PRODUCT OPTIONS

Leg Application	Depth A	Depth B	Width A	Width B	Width Configuration	Corner Detail
C C-Legs	23, 29	23, 29	43, 46, 49, 52, 55, 58	43, 46, 49, 52, 55, 58	**S** Standard Width	**C** Curved **S** Standard (Shown)

SAMPLE ORDER CODE

JNXV C	23	23	58	58	S	S

PRODUCT OPTIONS CONTINUED

Cut-Out Style		Cable Management	Connection Kit	Worksurface Finish	Edge Trim Style	Edge Trim Finish	Connection Kit Finish
CL Diamond & Square Cut-Outs – Left **CR** Diamond & Square Cut-Outs – Right **DL** Diamond Cut-Out – Left **DR** Diamond Cut-Out – Right	**NN** None (Shown) **SL** Square Cut-Out – Left **SR** Square Cut-Out – Right	**C** Clips (6)	**P** Pre-Installed	Foundation Laminate	**6** 3 mm Straight Trim	Edge Trim Colors	**52** Ebony **60** Platinum **83** Very White

SAMPLE ORDER CODE CONTINUED

NN	C	P	LW	6	ST	60

See Pricing on the following page.

JNXV
hiSpace 120° Worksurface with Quick Connect Kit (Continued)

DIMENSIONS – INCHES FOR MM X BY 25.4				PRICING
				C-LEGS (C)
				STANDARD WIDTH (S)
Da	Db	Wa	Wb	STANDARD (S) OR CURVED (C)
23	23	43	43	842
23	23	46	46	853
23	23	49	49	861
23	23	52	52	871
23	23	55	55	880
23	23	58	58	1129
29	29	43	43	853
29	29	46	46	1028
29	29	49	49	1071
29	29	52	52	1224
29	29	55	55	1270
29	29	58	58	1315

J N H T R F

Navigate Height-Adjustable Base – Rectangular

One Table
One Plug

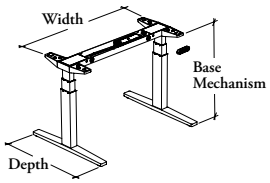

T-Legs (TT)

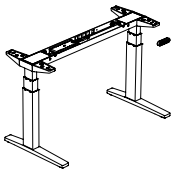

C-Legs (CC)

This base is to be paired with Rectangular Worksurface (JNHWRF or JNHCWRF) to create a freestanding rectangular height-adjustable table.

WHAT'S INCLUDED
1 rectangular height-adjustable base with levelers, 2 height-adjustable mechanisms, 1 control box, 1 power channel, 1 powerbar (as specified), 1 switch for height-adjustable mechanism (as specified) and mounting hardware.

WHAT'S EXCLUDED
Rectangular Worksurface for Navigate Base, Rectangular Worksurface for Navigate Base – Cross Grain, Height-Adjustable Table Caster Kit and Vertical Wire Carrier.

NOTES
Refer to application guide.

For more information about Frame Integrated Powerbar with IEC Outlet option (P), refer to One Table One Plug Application Guide in Complements: Teknion's Ergonomics & Accessories Programm.

PRODUCT OPTIONS

Leg Style	Leg Application	Base Mechanism	Depth	Width	Width Configuration
N Navigate	**CC** C-Legs **TT** T-Legs	**9E** Extended Electric – Extended (22.6" – 48.7") **9M** Extended Electric – Cityline Restricted (27.5" – 48.7")	23, 29	46, 49, 52, 55, 58, 61, 64, 67, 70, 73, 76, 79, 82	**S** Standard Width **U** User Optimized Width (Accessory Restriction)

SAMPLE ORDER CODE

JNHTRF N	CC	9M	23	52	U

PRODUCT OPTIONS CONTINUED

Powerbar	Underworksurface Cable Management	Switch		Base Finish
E External Powerbar **I** Frame Integrated Powerbar **P** Frame Integrated Powerbar with IEC Outlet **N** None	**N** None	**D** Display with Up/Down Memory **F** Toggle Up/Down – Platinum **G** Toggle Up/Down – Crisp Grey **H** Toggle Up/Down – Anthracite	**M** Display Toggle with Memory – Platinum **N** Display Toggle with Memory – Crisp Grey **O** Display Toggle with Memory – Anthracite	Foundation Accent Mica

SAMPLE ORDER CODE CONTINUED

N	N	M	83

See Pricing on the following page.

JNHTRF

Navigate Height-Adjustable Base – Rectangular (Continued)

DIMENSIONS INCHES / MM		PRICING			UPCHARGE
		C-LEGS (CC)			Display with Up/ Down Memory (D) Display Toogle with Memory (M, N or O)
		STANDARD WIDTH (S)			
D	W	NONE POWERBAR (N)	EXTERNAL POWERBAR (E)	FRAME INTEGRATED POWERBAR (I or P)	
23 / 584	46 / 1168	2594	2772	n/a	131
23 / 584	49 / 1245	2594	2772	n/a	131
23 / 584	52 / 1321	2594	n/a	2772	131
23 / 584	55 / 1397	2594	n/a	2772	131
23 / 584	58 / 1473	2594	n/a	2772	131
23 / 584	61 / 1549	2594	n/a	2772	131
23 / 584	64 / 1626	2594	n/a	2772	131
23 / 584	67 / 1702	2594	n/a	2772	131
23 / 584	70 / 1778	2594	n/a	2772	131
23 / 584	73 / 1854	2594	n/a	2772	131
23 / 584	76 / 1930	2594	n/a	2772	131
23 / 584	79 / 2007	2594	n/a	2772	131
23 / 584	82 / 2083	2594	n/a	2772	131
		USER OPTIMIZED WIDTH (ACCESSORY RESTRICTION) (U)			
23 / 584	46 / 1168	2594	n/a	2772	131
23 / 584	49 / 1245	2594	n/a	2772	131
23 / 584	52 / 1321	2594	n/a	2772	131
23 / 584	55 / 1397	2594	n/a	2772	131
23 / 584	58 / 1473	2594	n/a	2772	131
23 / 584	61 / 1549	2594	n/a	2772	131
23 / 584	64 / 1626	2594	n/a	2772	131
23 / 584	67 / 1702	2594	n/a	2772	131
23 / 584	70 / 1778	2594	n/a	2772	131
23 / 584	73 / 1854	2594	n/a	2772	131
23 / 584	76 / 1930	2594	n/a	2772	131
23 / 584	79 / 2007	2594	n/a	2772	131
23 / 584	82 / 2083	2594	n/a	2772	131

Pricing is continued on the following page.

J N H T R F

Navigate Height-Adjustable Base – Rectangular (Continued)

DIMENSIONS INCHES / MM		PRICING			UPCHARGE
		T-LEGS (TT)			Display with Up/ Down Memory (D) Display Toogle with Memory (M, N or O)
		STANDARD WIDTH (S)			
D	W	NONE POWERBAR (N)	EXTERNAL POWERBAR (E)	FRAME INTEGRATED POWERBAR (I or P)	
29 /737	46 / 1168	2594	2772	n/a	131
29 /737	49 / 1245	2594	2772	n/a	131
29 /737	52 / 1321	2594	n/a	2772	131
29 /737	55 / 1397	2594	n/a	2772	131
29 /737	58 / 1473	2594	n/a	2772	131
29 /737	61 / 1549	2594	n/a	2772	131
29 /737	64 / 1626	2594	n/a	2772	131
29 /737	67 / 1702	2594	n/a	2772	131
29 /737	70 / 1778	2594	n/a	2772	131
29 /737	73 / 1854	2594	n/a	2772	131
29 /737	76 / 1930	2594	n/a	2772	131
29 /737	79 / 2007	2594	n/a	2772	131
29 /737	82 / 2083	2594	n/a	2772	131
		USER OPTIMIZED WIDTH (ACCESSORY RESTRICTION) (U)			
29 /737	46 / 1168	2594	n/a	2772	131
29 /737	49 / 1245	2594	n/a	2772	131
29 /737	52 / 1321	2594	n/a	2772	131
29 /737	55 / 1397	2594	n/a	2772	131
29 /737	58 / 1473	2594	n/a	2772	131
29 /737	61 / 1549	2594	n/a	2772	131
29 /737	64 / 1626	2594	n/a	2772	131
29 /737	67 / 1702	2594	n/a	2772	131
29 /737	70 / 1778	2594	n/a	2772	131
29 /737	73 / 1854	2594	n/a	2772	131
29 /737	76 / 1930	2594	n/a	2772	131
29 /737	79 / 2007	2594	n/a	2772	131
29 /737	82 / 2083	2594	n/a	2772	131

J N H W R F

Rectangular Worksurface for Navigate Base

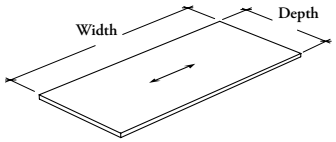

This worksurface is to be paired with Navigate Height-Adjustable Base – Rectangular (JNHTRF) to create a freestanding rectangular height-adjustable table.

WHAT'S INCLUDED
1 rectangular worksurface and 4 single wire management clips.

WHAT'S EXCLUDED
Navigate Height-Adjustable Base – Rectangular or Grommet Power Qube.

NOTES
When Diamond Cut-Out – Center option (DC) is specified, 49" width is **not** available.

When Cut-Out Style (DL or DR) is specified, 46" width combined with 23" depth is **not** available.

When Curved (C) Corner Detail is specified, 1.5 mm Flat Trim Style (8) is **not** available.

PRODUCT OPTIONS

Leg Application	Depth	Width	Corner Detail	Cut-Out Style
CC C-Legs **TT** T-Legs	23, 29	46, 49, 52, 55, 58, 61, 64, 67, 70, 73, 76, 79, 82	**C** Curved **S** Standard (Shown)	**CL** Diamond & Square Cut-Outs – Left **CR** Diamond & Square Cut-Outs – Right **DC** Diamond Cut-Out – Center **DL** Diamond Cut-Out – Left **DR** Diamond Cut-Out – Right **NN** None (Shown) **SC** Square Cut-Out – Center **SL** Square Cut-Out – Left **SR** Square Cut-Out – Right

SAMPLE ORDER CODE

JNHWRF TT	29	58	S	NN

PRODUCT OPTIONS CONTINUED

Cable Management	Worksurface Finish	Edge Trim Style	Edge Trim Finish
C Clips (4)	Foundation Laminate	**6** 3 mm Straight Trim **8** 1.5 mm Flat Trim	Edge Trim Colors

SAMPLE ORDER CODE CONTINUED

C	LW	6	ST

See Pricing on the following page.

J N H W R F

Rectangular Worksurface for Navigate Base (Continued)

DIMENSIONS INCHES / MM		PRICING	
		C-LEGS (CC)	
D	W	STANDARD (S)	CURVED (C)
23 / 584	46 / 1168	326	354
23 / 584	49 / 1245	340	369
23 / 584	52 / 1321	355	385
23 / 584	55 / 1397	369	401
23 / 584	58 / 1473	382	414
23 / 584	61 / 1549	397	433
23 / 584	64 / 1626	411	445
23 / 584	67 / 1702	425	462
23 / 584	70 / 1778	440	476
23 / 584	73 / 1854	454	493
23 / 584	76 / 1930	469	507
23 / 584	79 / 2007	480	523
23 / 584	82 / 2083	496	537
		T-LEGS (TT)	
29 /737	46 / 1168	376	406
29 /737	49 / 1245	392	425
29 /737	52 / 1321	411	443
29 /737	55 / 1397	428	463
29 /737	58 / 1473	445	480
29 /737	61 / 1549	463	498
29 /737	64 / 1626	479	517
29 /737	67 / 1702	498	535
29 /737	70 / 1778	514	554
29 /737	73 / 1854	531	572
29 /737	76 / 1930	550	590
29 /737	79 / 2007	565	610
29 /737	82 / 2083	583	626

J N H C W R F

Rectangular Worksurface for Navigate Base – Cross Grain

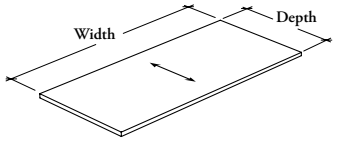

This worksurface is to be paired with Navigate Height-Adjustable Base – Rectangular (JNHTRF) to create a freestanding rectangular height-adjustable table.

WHAT'S INCLUDED
1 rectangular worksurface and 4 single wire management clips.

WHAT'S EXCLUDED
Navigate Height-Adjustable Base – Rectangular or Grommet Power Qube.

NOTES
When Diamond Cut-Out – Center option (DC) is specified, 49" width is **not** available.

When Cut-Out Style (DL or DR) is specified, 46" width combined with 23" depth is **not** available.

When Curved (C) Corner Detail is specified, 1.5 mm Flat Trim Style (8) is **not** available.

PRODUCT OPTIONS

Leg Application	Depth	Width	Corner Detail	Cut-Out Style
CC C-Legs	23, 29	46, 49, 52, 55, 58	**C** Curved	**CL** Diamond & Square Cut-Outs – Left
TT T-Legs			**S** Standard (Shown)	**CR** Diamond & Square Cut-Outs – Right
				DC Diamond Cut-Out – Center
				DL Diamond Cut-Out – Left
				DR Diamond Cut-Out – Right
				NN None (Shown)
				SC Square Cut-Out – Center
				SL Square Cut-Out – Left
				SR Square Cut-Out – Right

SAMPLE ORDER CODE

JNHCWRF TT	29	58	S	NN

PRODUCT OPTIONS CONTINUED

Cable Management	Worksurface Finish	Edge Trim Style	Edge Trim Finish
C Clips (4)	Foundation Laminate	**6** 3 mm Straight Trim	Edge Trim Colors
		8 1.5 mm Flat Trim	

SAMPLE ORDER CODE CONTINUED

C	LW	6	ST

See Pricing on the following page.

J N H C W R F

Rectangular Worksurface for Navigate Base – Cross Grain (Continued)

DIMENSIONS INCHES / MM		PRICING	
		C-LEGS (CC)	
D	W	STANDARD (S)	CURVED (C)
23 / 584	46 / 1168	326	354
23 / 584	49 / 1245	340	369
23 / 584	52 / 1321	355	385
23 / 584	55 / 1397	369	401
23 / 584	58 / 1473	382	414
		T-LEGS (TT)	
29 /737	46 / 1168	376	406
29 /737	49 / 1245	392	425
29 /737	52 / 1321	411	443
29 /737	55 / 1397	428	463
29 /737	58 / 1473	445	480

J N T V
Navigate Height-Adjustable Base – 120°

One Table
One Plug

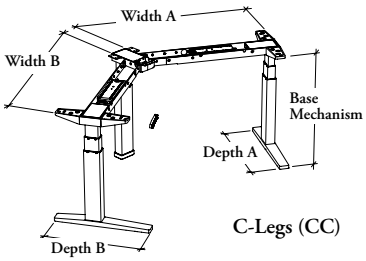

C-Legs (CC)

This base is to be paired with 120° Worksurface (JNHV) to create a freestanding 120° height-adjustable table.

WHAT'S INCLUDED
1 120° height-adjustable base with levelers, 3 height-adjustable mechanisms, 2 control box, 2 power channels, 1 powerbar (as specified), 1 switch for height-adjustable mechanism (as specified) and mounting hardware.

WHAT'S EXCLUDED
120° Worksurface for Navigate Base, Height-Adjustable Table Caster Kit and Vertical Wire Carrier.

NOTES
The dimension specified with Depth B must be the same with Depth A.

The dimension specified with Width B must be the same with Width A.

Refer to application guide.

For more information about Frame Integrated Powerbar with IEC Outlet option (P), refer to One Table One Plug Application Guide in Complements: Teknion's Ergonomics & Accessories Programm.

PRODUCT OPTIONS

Leg Style	Base Mechanism	Depth A	Depth B	Width A	Width B
N Navigate	**9E** Extended Electric – Extended (22.6" – 48.7") **9M** Extended Electric – Cityline Restricted (27.5" – 48.7")	23, 29	23, 29	43, 46, 49, 52, 55, 58, 61, 64	43, 46, 49, 52, 55, 58, 61, 64

SAMPLE ORDER CODE

JNTV N	9M	23	23	52	52

PRODUCT OPTIONS CONTINUED

Width Configuration	Powerbar	Underworksurface Cable Management	Switch		Base Finish
L Standard – Recessed on Left **R** Standard – Recessed on Right **S** Standard	**E** External Powerbar **I** Frame Integrated Powerbar **P** Frame Integrated Powerbar with IEC Outlet **N** None	**N** None	**D** Display with Up/Down Memory **F** Toggle Up/Down – Platinum **G** Toggle Up/Down – Crisp Grey **H** Toggle Up/Down – Anthracite	**M** Display Toggle with Memory – Platinum **N** Display Toggle with Memory – Crisp Grey **O** Display Toggle with Memory – Anthracite	Foundation Accent Mica

SAMPLE ORDER CODE CONTINUED

S	N	N	M	83

See Pricing on the following page.

JNTV

Navigate Height-Adjustable Base – 120° (Continued)

DIMENSIONS – INCHES FOR MM X BY 25.4				PRICING			UPCHARGE
				STANDARD (S)			Display with Up/ Down Memory (D) Display Toogle with Memory (M, N or O)
Da	Db	Wa	Wb	NONE POWERBAR (N)	EXTERNAL POWERBAR(E)	FRAME INTEGRATED POWERBAR (I OR P)	
23	23	43	43	3602	3780	n/a	131
23	23	46	46	3602	3780	n/a	131
23	23	49	49	3602	n/a	3780	131
23	23	52	52	3602	n/a	3780	131
23	23	55	55	3602	n/a	3780	131
23	23	58	58	3602	n/a	3780	131
23	23	61	61	3602	n/a	3780	131
23	23	64	64	3602	n/a	3780	131
29	29	43	43	3602	3780	n/a	131
29	29	46	46	3602	3780	n/a	131
29	29	49	49	3602	n/a	3780	131
29	29	52	52	3602	n/a	3780	131
29	29	55	55	3602	n/a	3780	131
29	29	58	58	3602	n/a	3780	131
29	29	61	61	3602	n/a	3780	131
29	29	64	64	3602	n/a	3780	131
				STANDARD – RECESSED ON LEFT OR RIGHT (L or R)			
23	23	43	43	3602	3780	n/a	131
23	23	46	46	3602	3780	n/a	131
23	23	49	49	3602	n/a	3780	131
23	23	52	52	3602	n/a	3780	131
23	23	55	55	3602	n/a	3780	131
23	23	58	58	3602	n/a	3780	131
23	23	61	61	3602	n/a	3780	131
23	23	64	64	3602	n/a	3780	131
29	29	43	43	3602	3780	n/a	131
29	29	46	46	3602	3780	n/a	131
29	29	49	49	3602	n/a	3780	131
29	29	52	52	3602	n/a	3780	131
29	29	55	55	3602	n/a	3780	131
29	29	58	58	3602	n/a	3780	131
29	29	61	61	3602	n/a	3780	131
29	29	64	64	3602	n/a	3780	131

J N H V
120° Worksurface for Navigate Base

This worksurface is to be paired with Navigate Height-Adjustable Base – 120° (JNTV) to create a freestanding 120° height-adjustable table.

WHAT'S INCLUDED
1 120° worksurface and 6 single wire management clips.

WHAT'S EXCLUDED
NAVIGATE HEIGHT-ADJUSTABLE BASE – 120°.

NOTES
The dimension specified with Depth B must be the same with Depth A.

The dimension specified with Width B must be the same with Width A.

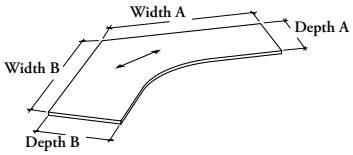

PRODUCT OPTIONS

Leg Application	Depth A	Depth B	Width A	Width B	Corner Detail
CC C-Legs	23, 29	23, 29	43, 46, 49, 52, 55, 58, 61, 64	43, 46, 49, 52, 55, 58, 61, 64	**C** Curved **S** Standard (Shown)

SAMPLE ORDER CODE

JNHV CC	23	23	58	58	S

PRODUCT OPTIONS CONTINUED

Cut-Out Style		Cable Management	Worksurface Finish	Edge Trim Style	Edge Trim Finish
CL Diamond & Square Cut-Outs – Left **CR** Diamond & Square Cut-Outs – Right **DC** Diamond Cut-Out – Center **DL** Diamond Cut-Out – Left	**DR** Diamond Cut-Out – Right **NN** None (Shown) **SL** Square Cut-Out – Left **SR** Square Cut-Out – Right	**C** Clips (6)	Foundation Laminate	**6** 3 mm Straight Trim	Edge Trim Colors

SAMPLE ORDER CODE CONTINUED

NN	C	LW	6	ST

See Pricing on the following page.

J N H V

120° Worksurface for Navigate Base (Continued)

DIMENSIONS – INCHES FOR MM X 25.4				PRICING
				C-LEGS (CC)
Da	Db	Wa	Wb	STANDARD (S) OR CURVED (C)
23	23	43	43	717
23	23	46	46	728
23	23	49	49	737
23	23	52	52	746
23	23	55	55	756
23	23	58	58	1003
23	23	61	61	1047
23	23	64	64	1088
29	29	43	43	728
29	29	46	46	902
29	29	49	49	945
29	29	52	52	1099
29	29	55	55	1146
29	29	58	58	1190
29	29	61	61	1241
29	29	64	64	1290

J N H C A
Height-Adjustable Table Caster Kit

WHAT'S INCLUDED
4 lockable casters.

WHAT'S EXCLUDED
Navigate Height-Adjustable Bases.

NOTES
For use with selected height-adjustable base product line.

Caster Kit will add 1.75" to stated height range for the adjustable table (Example: Navigate Height-Adjustable Base – Rectangular (JNHTRF) Range 22.6" – 48.7" stated range will be 24.35" – 50.45" with Caster Kit).

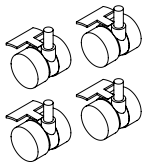

PRODUCT OPTIONS

Leg Style
N Navigate

SAMPLE ORDER CODE

JNHCA N

PRICING

154

JNHEA
Vertical Wire Carrier

WHAT'S INCLUDED
1 vertical wire carrier, 1 leg cover, 1 top bracket and 1 cable tie.

WHAT'S EXCLUDED
hiSpace Quick Connect Height-Adjustable Mechanism and Navigate Height-Adjustable Bases.

NOTES
When Style (HE or HU) is specified, Leg Cover Finish is limited to Ebony (52), Platinum (60) or Very White (83) only.

When Style (HE or HU) is specified, Wire Carrier Finish matches the Leg Cover Finish.

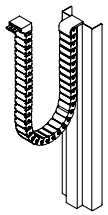

PRODUCT OPTIONS

Style	Leg Cover Finish	Wire Carrier Finish
HE hiSpace – Standard Range (22.6" – 48.7")	Foundation	**E** Ebony Coordinate
HU hiSpace – with Riser (25" – 51.1")	Accent	**7** Platinum Coordinate
NF Navigate Freestanding	Mica	**V** Verry White Coordinate

SAMPLE ORDER CODE

JNHEA NF	**53**	**V**

STYLE	PRICING
NF	238
HE	238
HU	238

tables

tables product map

J N T O S B Round Meeting Table – Blade Star Base

Page 1040

J N T S S B Square Meeting Table – Blade Star Base

Page 1041

J N G S S B Square Writable Glass Meeting Table – Blade Star Base

Page 1042

JNTOSB

Round Meeting Table – Blade Star Base

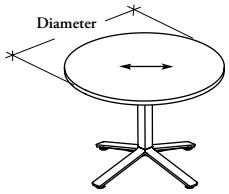

This table is available in many sizes to accommodate diverse numbers of participants and meeting spaces.

WHAT'S INCLUDED
1 worksurface, 1 blade star base with levelers, 1 power module cut-out (as specified) and mounting hardware.

WHAT'S EXCLUDED
Power modules.

NOTES
A Power Cube (JNEPC) **cannot** be installed on this product.

When a Power Module Cut-Out (NN) option is specified, the Blade Star Base comes without Wire Management section.

PRODUCT OPTIONS

Diameter	Power Module Cut-Out	Worksurface Finish	Edge Trim Style	Edge Trim Finish	Support Finish
36, 42, 48	**LC** Linear Power Module – Compact 8" **PD** Power Pill – Dual **PQ** Power Pill – Quad **NN** No Cut-Out	Foundation Laminate	**6** 3 mm Straight Trim	Edge Trim Colors	Foundation Accent Mica

SAMPLE ORDER CODE

JNTOSB 42	NN	RV	6	SS	60

DIMENSIONS
INCHES / MM

Dia.
36 / 914
42 / 1067
48 / 1219

PRICING

Foundation Laminate
1121
1249
1400

JNTSSB
Square Meeting Table – Blade Star Base

This table is available in many sizes to accommodate diverse numbers of participants and meeting spaces.

WHAT'S INCLUDED
1 worksurface, 1 blade star base with levelers, 1 power module cut-out (as specified) and mounting hardware.

WHAT'S EXCLUDED
Power modules.

NOTES
A Power Cube (JNEPC) **cannot** be installed on this product.

When Curved Corner Details (C) is specified, only 3 mm Straight Trim (6) is available.

When a Power Module Cut-Out (NN) option is specified, the Blade Star Base comes without Wire Management section.

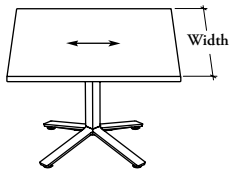

PRODUCT OPTIONS

Width	Corner Detail	Power Module Cut-Out	Worksurface Finish	Edge Trim Style	Edge Trim Finish	Support Finish
36, 42, 48	**C** Curved **S** Standard (Shown)	**LC** Linear Power Module – Compact 8" **PD** Power Pill – Dual **PQ** Power Pill – Quad **NN** No Cut-Out	Foundation Laminate	**6** 3 mm Straight Trim **8** 1.5 mm Flat Trim	Edge Trim Colors	Foundation Accent Mica

SAMPLE ORDER CODE

JNTSSB 48	S	LC	RV	6	SS	60

DIMENSIONS
INCHES / MM

W
36 / 914
42 / 1067
48 / 1219

PRICING

Foundation Laminate
1121
1249
1400

JNGSSB

Square Writable Glass Meeting Table – Blade Star Base

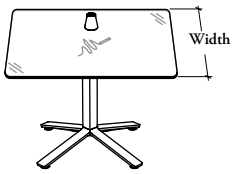

This Writable Glass Meeting Table is available in many sizes to accommodate diverse numbers of participants and meeting spaces.

WHAT'S INCLUDED
1 glass worksurface with metal tapered edge, 1 blade star base with levelers, 1 power module cut-out (as specified), 1 table companion marker kit and mounting hardware.

WHAT'S EXCLUDED
Power modules.

NOTES
Only available with curved corner detail.

When a Power Module Cut-Out (LC, PD or PQ) option is specified, the Blade Star Base comes with Wire Management section.

When a Power Module Cut-Out (NN) option is specified, the Blade Star Base comes without Wire Management section.

PRODUCT OPTIONS

Width	Power Module Cut-Out	Companion Marker Kit	Worksurface Finish	Metal Edge Finish	Support Finish	Companion Finish
36, 42, 48	**LC** Linear Power Module – Compact 8"	**K** With Companion Kit (Shown)	Back-Painted	Foundation	Foundation	Foundation
				Accent	Accent	Accent
	PD Power Pill – Dual			Mica	Mica	Mica
	PQ Power Pill – Quad					
	NN No Cut-Out					

SAMPLE ORDER CODE

JNGSSB 36	PD	K	K1	60	60	93

DIMENSIONS
INCHES / MM

W
36 / 914
42 / 1067
48 / 1219

PRICING

NO CUT-OUT (NN)	WITH POWER MODULE CUT-OUT (LC, PD or PQ)
1384	1463
1612	1691
1875	1953

desk accessories

desk accessories product map

J N A L S Freestanding Leg – Single-Sided

Page 1046

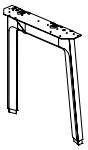

J N A L D Freestanding Leg – Double-Sided

Page 1047

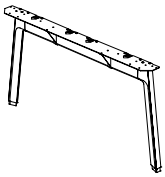

J N A L L Freestanding Leg – Lateral Cabinet

Page 1048

J N A L P Freestanding Leg – Peninsula

Page 1049

J N A P P Peninsula Monopod Base – Round

Page 1050

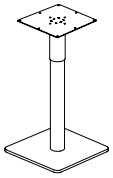

J N A S M G Suspended Modesty Panel – Glass

Page 1051

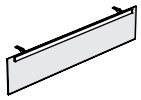

J N A S M L Suspended Modesty Panel – Solid

Page 1052

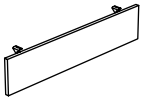

J N A B M S Beam-Mounted Modesty Panel – Solid

Page 1053

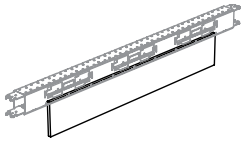

J N A L S
Freestanding Leg – Single-Sided

The Freestanding Leg – Single-Sided is designed to be installed under Single-Sided Rectangular Worksurfaces without structural beam at the back.

WHAT'S INCLUDED
1 leg with levelers, leveler covers and mounting hardware.

NOTES
Leg height is 29" from the finished floor to the top of the finished worksurface with a leveling range of 3".

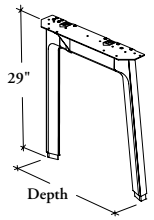

PRODUCT OPTIONS

Support Style	Depth	Orientation	Finish
A Angled	24, 30	**L** Left	Foundation
		R Right (Shown)	Mica
			Accent

SAMPLE ORDER CODE

JNALS A	24	L	74

DIMENSIONS INCHES / MM

D
24 / 610
30 / 762

PRICING

520
548

JNALD
Freestanding Leg – Double-Sided

The Freestanding Leg – Double-Sided is designed to be installed under Double-Sided Rectangular Worksurfaces without structural beam in the center. It can be used left or right position.

WHAT'S INCLUDED
1 leg with levelers, leveler covers and mounting hardware.

NOTES
Leg height is 29" from the finished floor to the top of the finished worksurface with a leveling range of 3".

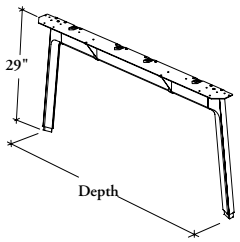

PRODUCT OPTIONS

Support Style	Depth	Orientation	Finish
A Angled	48, 60	**E** End	Foundation Mica Accent

SAMPLE ORDER CODE

JNALD A	48	E	74

DIMENSIONS INCHES / MM

D
48 / 1219
60 / 1524

PRICING

645
699

J N A L L
Freestanding Leg – Lateral Cabinet

The Freestanding Leg – Lateral Cabinet is used to support a Lateral Beam – Mounted Cabinet (JNBDLO).

WHAT'S INCLUDED
1 leg with levelers, leveler covers and mounting hardware.

NOTES
Leg height is 29" from the finished floor to the top of the finished worksurface with a leveling range of 3".

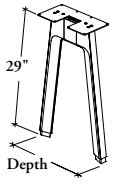

PRODUCT OPTIONS

Support Style	Depth	Finish
A Angled	18	Foundation
		Mica
		Accent

SAMPLE ORDER CODE

JNALL A	18	74

DIMENSIONS INCHES / MM

D
18 / 457

PRICING

491

JNALP
Freestanding Leg – Peninsula

The Freestanding Leg – Peninsula is available to support Laminate or Writable Glass Peninsula Worksurfaces in a freestanding application.

WHAT'S INCLUDED
1 leg with levelers, leveler covers and mounting hardware.

NOTES
Leg height is 29" from the finished floor to the top of the finished worksurface with a leveling range of 3".

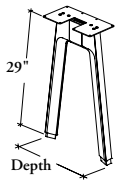

PRODUCT OPTIONS

Support Style	Depth	Finish
A Angled	18	Foundation Mica Accent

SAMPLE ORDER CODE

JNALP A	**18**	**74**

DIMENSIONS INCHES / MM

D
18 / 457

PRICING

491

J N A P P
Peninsula Monopod Base – Round

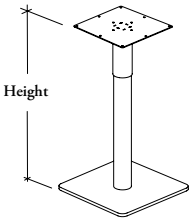

This base is only used with High Peninsula Worksurface (JNWPH).

WHAT'S INCLUDED
1 monopod base and mounting hardware.

NOTES
Monopod Base height is 29", 36" or 42" from the finished floor to the top of the finished worksurface.

29" Monopod Base height can also be used with Writable Glass Peninsula Worksurfaces (JNWPGN or JNWPGE).

Cannot be used to support Rectangular Worksurfaces.

PRODUCT OPTIONS

Height	Finish
29, 36, 42	Foundation Mica Accent

SAMPLE ORDER CODE

JNAPP 29	**53**

DIMENSIONS
INCHES / MM

H
29 / 737
36 / 914
42 / 1067

PRICING

681
701
713

JNASMG
Suspended Modesty Panel – Glass

This modesty panel provides additional seated privacy and can be used with specific worksurfaces.

WHAT'S INCLUDED
1 modesty panel and mounting hardware.

NOTES
The width specified depends on products and supports selected. For details, please refer to the Application Guide for the compatibility with Worksurfaces and Height-Adjustable Run-Off (JNHB).

Cannot be installed under a structural beam.

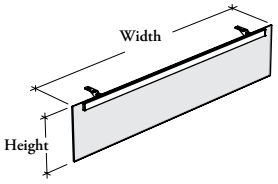

PRODUCT OPTIONS

Height	Width	Mounting Style	Glass Finish	Hardware Finish
10	24, 27, 30, 33, 36, 39, 42, 45, 48, 51, 54, 57, 60, 63, 66, 69, 72, 75, 78	**S** Standard	**Standard Glass:** **FT** Frost **Low Iron Glass:** **LB** Frost – Low Iron **Back-Painted**	Foundation Mica Accent

SAMPLE ORDER CODE

JNASMG 10	54	S	FT	74

DIMENSIONS INCHES / MM

H	W
10 / 254	24 / 610
10 / 254	27 / 686
10 / 254	30 / 762
10 / 254	33 / 838
10 / 254	36 / 914
10 / 254	39 / 991
10 / 254	42 / 1067
10 / 254	45 / 1143
10 / 254	48 / 1219
10 / 254	51 / 1295
10 / 254	54 / 1372
10 / 254	57 / 1448
10 / 254	60 / 1524
10 / 254	63 / 1600
10 / 254	66 / 1676
10 / 254	69 / 1753
10 / 254	72 / 1829
10 / 254	75 / 1905
10 / 254	78 / 1981

PRICING

Frost (FT)	Frost Low Iron (LB)	Back-Painted
298	321	347
304	329	358
314	340	374
321	351	384
326	358	399
346	380	421
362	404	447
380	420	470
397	440	492
413	461	516
433	479	537
449	501	563
466	523	586
485	543	611
502	563	632
523	583	658
537	604	682
558	624	706
577	647	732

J N A S M L
Suspended Modesty Panel – Solid

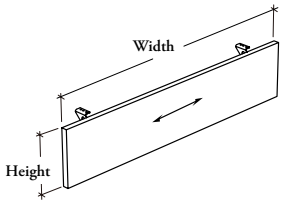

This modesty panel provides additional seated privacy and can be used with specific worksurfaces.

WHAT'S INCLUDED
1 modesty panel and mounting hardware.

NOTES
The width specified depends on products and supports selected. For details, please refer to the Application Guide for the compatibility with Worksurfaces and Height-Adjustable Run-Off (JNHB).

Cannot be installed under a structural beam.

PRODUCT OPTIONS

Height	Width	Mounting Style	Finish
10	24, 27, 30, 33, 36, 39, 42, 45, 48, 51, 54, 57, 60, 63, 66, 69, 72, 75, 78	**S** Standard	Source Laminate

SAMPLE ORDER CODE

JNASML 10	**78**	**S**	**XS**

DIMENSIONS
INCHES / MM

H	W
10 / 254	24 / 610
10 / 254	27 / 686
10 / 254	30 / 762
10 / 254	33 / 838
10 / 254	36 / 914
10 / 254	39 / 991
10 / 254	42 / 1067
10 / 254	45 / 1143
10 / 254	48 / 1219
10 / 254	51 / 1295
10 / 254	54 / 1372
10 / 254	57 / 1448
10 / 254	60 / 1524
10 / 254	63 / 1600
10 / 254	66 / 1676
10 / 254	69 / 1753
10 / 254	72 / 1829
10 / 254	75 / 1905
10 / 254	78 / 1981

PRICING

90
93
94
100
110
118
124
129
136
145
152
165
175
181
187
197
203
210
217

EZ compatible

JNABMS

Beam-Mounted Modesty Panel – Solid

This modesty panel provides additional seated privacy and can only be used under a structural beam.

WHAT'S INCLUDED
1 modesty panel and mounting hardware.

NOTES
The width specified depends on products and supports selected. For details, please refer to the Application Guide for the compatibility.

Cannot be installed under a Worksurface.

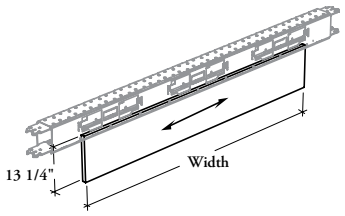

PRODUCT OPTIONS

Modesty Base Height	Width	Configuration	Finish
E Elevated Height (10" from Floor)	24, 30, 36, 42, 48, 54, 60, 66, 72, 78, 84	**D** Double-Sided (Shown) **S** Single-Sided	Source Laminate

SAMPLE ORDER CODE

JNABMS E	24	D	XS

DIMENSIONS INCHES / MM

W
24 / 610
30 / 762
36 / 914
42 / 1067
48 / 1219
54 / 1372
60 / 1524
66 / 1676
72 / 1829
78 / 1981
84 / 2134

PRICING

126
135
153
175
190
212
245
263
285
304
327

workstation screens

workstation screens product map

J N S A S B Solid Add-On Screen – Beam-Mounted

Page 1060

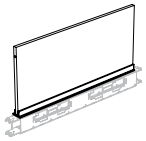

J N S A S W Solid Add-On Screen – Worksurface-Mounted

Page 1062

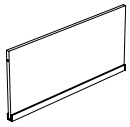

J N S A G B Glass Add-On Screen – Beam-Mounted

Page 1064

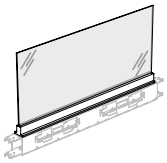

J N S A G W Glass Add-On Screen – Worksurface-Mounted

Page 1066

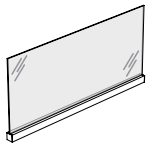

J N S A F B Fabric Add-On Screen – Beam-Mounted

Page 1068

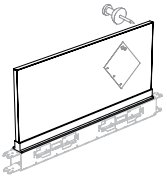

J N S A F W Fabric Add-On Screen – Worksurface-Mounted

Page 1070

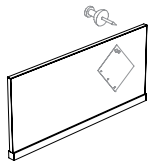

J N S A B E Felt Add-On Screen – Beam-Mounted

Page 1072

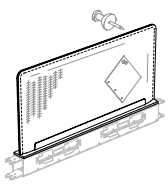

J N S A E W Felt Add-On Screen – Worksurface-Mounted

Page 1074

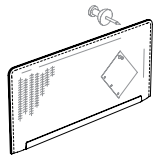

workstation screens product map

J N S W G W Glass Edge Screen – Worksurface-Mounted

Page 1076

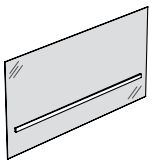

J N S E S B Solid Elevated Screen – Beam-Mounted

Page 1078

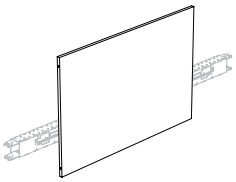

J N S E S W Solid Elevated Screen – Worksurface-Mounted

Page 1080

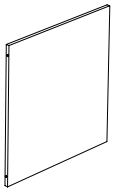

J N S E G B Glass Elevated Screen – Beam-Mounted

Page 1084

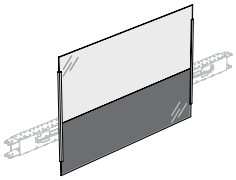

J N S E G W Glass Elevated Screen – Worksurface-Mounted

Page 1086

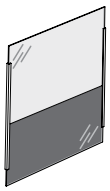

J N S E F B Fabric Elevated Screen – Beam-Mounted

Page 1088

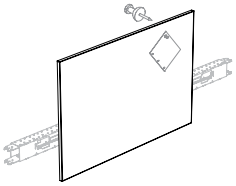

J N S E F W Fabric Elevated Screen – Worksurface-Mounted

Page 1090

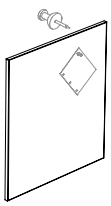

workstation screens product map

J N S E E B Felt Elevated Screen – Beam-Mounted

Page 1094

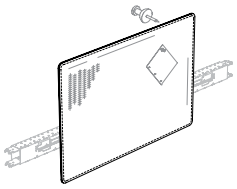

J N S E E W Felt Elevated Screen – Worksurface-Mounted

Page 1096

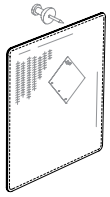

J N S E C F Felt Corner Elevated Screen

Page 1098

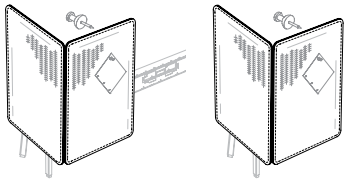

J N S E L E Felt End Screen – Worksurface-Mounted

Page 1100

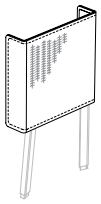

J N S F S B Floor Screen – Beam-Mounted

Page 1102

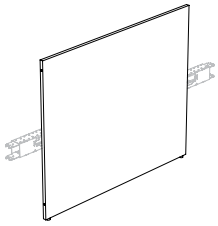

J N S F S W Floor Screen – Worksurface-Mounted

Page 1104

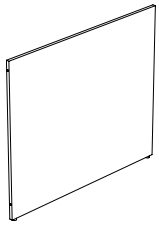

J N S F G B Floor Screen with Glass – Beam-Mounted

Page 1106

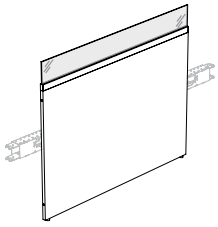

J N S F G W Floor Screen with Glass – Worksurface-Mounted

Page 1110

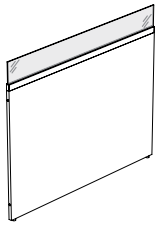

workstation screens product map

J N S L S Linking Strip for Glass Screen

Page 1116

J N S W R C Worksurface Retrofit Cover

Page 1117

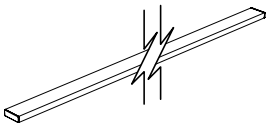

J N S A S B
Solid Add-On Screen – Beam-Mounted

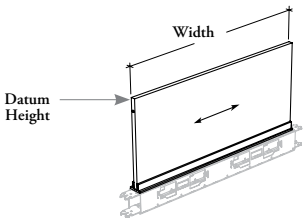

This screen mounts directly on top of a Structural Beam to create seated privacy and space division at various heights in a workstation.

WHAT'S INCLUDED
1 solid screen, linking devices and caps (as specified) and mounting hardware.

WHAT'S EXCLUDED
Structural Beam, Chicago Structural Beam, Sit and Slide Screens.

NOTES
The solid panel is 1" thick.

For a continuous look, mounting hardware finish must match adjacent Structural Beam Cover top finish.

When 18" Low Height (L) option is specified, only Width Reduction for Lateral Application options (S or Y) are available.

PRODUCT OPTIONS

Beam Height	Datum Height	Width	Width Reduction for Lateral Application	Corner Detail	Alignment Holes	Screen Finish	Mounting Hardware Finish
C Standard Height (28) **L** Low Height (18)	42, 51, 57	24, 30, 36, 42, 48, 54, 60, 66, 72, 78, 84	**A** Beam – Half **B** Beam – Full **S** Standard Width **Y** 120° Connection	**S** Standard	**N** Without Alignment Holes **W** With Alignment Holes (Shown)	Source Laminate	Foundation Mica Accent

SAMPLE ORDER CODE

JNSASB C	51	24	S	S	N	XS	74

DIMENSIONS INCHES / MM

PRICING

H	W	28" STANDARD HEIGHT (C)	18" LOW HEIGHT (L)
42 / 1067	24 / 610	285	317
42 / 1067	30 / 762	302	338
42 / 1067	36 / 914	336	380
42 / 1067	42 / 1067	355	406
42 / 1067	48 / 1219	375	432
42 / 1067	54 / 1372	408	471
42 / 1067	60 / 1524	426	498
42 / 1067	66 / 1676	443	521
42 / 1067	72 / 1829	478	560
42 / 1067	78 / 1981	498	585
42 / 1067	84 / 2134	514	610
51 / 1295	24 / 610	313	345
51 / 1295	30 / 762	333	370
51 / 1295	36 / 914	376	418
51 / 1295	42 / 1067	401	449
51 / 1295	48 / 1219	422	479
51 / 1295	54 / 1372	465	528
51 / 1295	60 / 1524	491	560
51 / 1295	66 / 1676	512	588
51 / 1295	72 / 1829	552	632
51 / 1295	78 / 1981	575	661
51 / 1295	84 / 2134	597	694

Pricing is continued on the following page.

JNSASB
Solid Add-On Screen – Beam-Mounted (Continued)

DIMENSIONS INCHES / MM		PRICING
H	W	28" STANDARD HEIGHT (C) (CONTINUED)
57 / 1448	24 / 610	328
57 / 1448	30 / 762	357
57 / 1448	36 / 914	404
57 / 1448	42 / 1067	433
57 / 1448	48 / 1219	461
57 / 1448	54 / 1372	505
57 / 1448	60 / 1524	534
57 / 1448	66 / 1676	561
57 / 1448	72 / 1829	609
57 / 1448	78 / 1981	638
57 / 1448	84 / 2134	664

J N S A S W
Solid Add-On Screen – Worksurface-Mounted

This screen mounts directly on a worksurface to create seated privacy and space division at various heights in a workstation.

WHAT'S INCLUDED
1 solid screen, linking devices and caps (as specified) and mounting hardware.

WHAT'S EXCLUDED
Worksurfaces, Sit and Slide Screens.

NOTES
The solid panel is 1" thick.

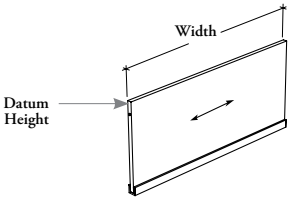

PRODUCT OPTIONS

Datum Height	Width	Width Reduction for Lateral Application	Corner Detail	Alignment Holes	Screen Finish	Mounting Hardware Finish
42, 51, 57	18, 21, 24, 27, 30, 33, 36, 39, 42, 45, 48, 51, 54, 57, 60, 63, 66, 69, 72, 75, 78, 81, 84	**F** One Side Full Screen or Both Sides Shared Screens **H** One Side Shared Screen **S** Standard Width	**S** Standard	**N** Without Alignment Holes **W** With Alignment Holes (Shown)	Source Laminate	Foundation Mica Accent

SAMPLE ORDER CODE

JNSASW 51	24	S	S	N	XS	74

DIMENSIONS INCHES / MM		PRICING
H	W	
42 / 1067	18 / 457	287
42 / 1067	21 / 533	295
42 / 1067	24 / 610	300
42 / 1067	27 / 686	311
42 / 1067	30 / 762	321
42 / 1067	36 / 838	345
42 / 1067	36 / 914	350
42 / 1067	39 / 991	355
42 / 1067	42 / 1067	360
42 / 1067	45 / 1143	369
42 / 1067	48 / 1219	375
42 / 1067	51 / 1295	397
42 / 1067	54 / 1372	404
42 / 1067	57 / 1448	409
42 / 1067	60 / 1524	414
42 / 1067	63 / 1600	421
42 / 1067	66 / 1676	426
42 / 1067	69 / 1753	449
42 / 1067	72 / 1829	456
42 / 1067	75 / 1905	463
42 / 1067	78 / 1981	470
42 / 1067	81 / 2057	474
42 / 1067	84 / 2134	480

DIMENSIONS INCHES / MM		PRICING
H	W	
51 / 1295	18 / 457	304
51 / 1295	21 / 533	319
51 / 1295	24 / 610	328
51 / 1295	27 / 686	340
51 / 1295	30 / 762	353
51 / 1295	36 / 838	378
51 / 1295	36 / 914	385
51 / 1295	39 / 991	397
51 / 1295	42 / 1067	406
51 / 1295	45 / 1143	414
51 / 1295	48 / 1219	422
51 / 1295	51 / 1295	450
51 / 1295	54 / 1372	461
51 / 1295	57 / 1448	470
51 / 1295	60 / 1524	478
51 / 1295	63 / 1600	488
51 / 1295	66 / 1676	498
51 / 1295	69 / 1753	523
51 / 1295	72 / 1829	530
51 / 1295	75 / 1905	537
51 / 1295	78 / 1981	548
51 / 1295	81 / 2057	556
51 / 1295	84 / 2134	564

Pricing is continued on the following page.

JNSASW

Solid Add-On Screen – Worksurface-Mounted (Continued)

DIMENSIONS INCHES / MM		PRICING
H	W	
57 / 1448	18 / 457	321
57 / 1448	21 / 533	332
57 / 1448	24 / 610	347
57 / 1448	27 / 686	360
57 / 1448	30 / 762	376
57 / 1448	36 / 838	405
57 / 1448	36 / 914	413
57 / 1448	39 / 991	426
57 / 1448	42 / 1067	437
57 / 1448	45 / 1143	449
57 / 1448	48 / 1219	461
57 / 1448	51 / 1295	488
57 / 1448	54 / 1372	500
57 / 1448	57 / 1448	509
57 / 1448	60 / 1524	524
57 / 1448	63 / 1600	534
57 / 1448	66 / 1676	546
57 / 1448	69 / 1753	573
57 / 1448	72 / 1829	586
57 / 1448	75 / 1905	596
57 / 1448	78 / 1981	610
57 / 1448	81 / 2057	619
57 / 1448	84 / 2134	630

J N S A G B

Glass Add-On Screen – Beam-Mounted

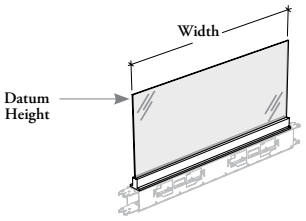

This screen mounts directly on top of a structural beam to create seated privacy and space division at various heights in a workstation.

WHAT'S INCLUDED
1 glass screen and mounting hardware.

WHAT'S EXCLUDED
Structural Beam, Chicago Structural Beam and Linking Strip for Glass Screen.

NOTES
The tempered glass is 1/4" (6 mm) thick.

Low Iron Glass Finishes (LA-LB) reduce the greenish render of standard glass. It must be used to match Glass Elevated Screen.

Frost Finishes (FT or LB) are single-sided etched, Satin (FB) is etched on both sides.

For a continuous look, mounting hardware finsh must match adjacent Structural Beam Cover top finish.

When 18" Low Height (L) option is specified, only Width Reduction for Lateral Application (S or Y) options are available.

Only Width Reduction for Lateral Application (S) option can be specified with 24" or 30" width.

PRODUCT OPTIONS

Beam Height	Datum Height	Width	Width Reduction for Lateral Application	Corner Detail	Glass Finish	Mounting Hardware Finish
C Standard Height (28) **L** Low Height (18)	42, 51	24, 30, 36, 42, 48, 54, 60, 66, 72, 78, 84	**A** Beam – Half **B** Beam – Full **S** Standard Width **Y** 120° Connection	**S** Standard	**Standard Glass:** **CL** Clear **FT** Frost **FB** Satin **Low Iron Glass:** **LA** Clear – Low Iron **LB** Frost – Low Iron	Foundation Mica Accent

SAMPLE ORDER CODE

JNSAGB C	51	24	S	S	FT	74

DIMENSIONS
INCHES / MM

PRICING

		28" STANDARD HEIGHT (C)				
H	W	Clear (CL)	Frost (FT)	Satin (FB)	Clear – Low Iron (LA)	Frost – Low Iron (LB)
42 / 1067	24 / 610	268	287	350	298	316
42 / 1067	30 / 762	288	311	387	326	347
42 / 1067	36 / 914	356	383	477	404	426
42 / 1067	42 / 1067	376	407	516	429	456
42 / 1067	48 / 1219	394	433	557	456	487
42 / 1067	54 / 1372	433	473	614	501	535
42 / 1067	60 / 1524	449	496	652	528	565
42 / 1067	66 / 1676	469	521	690	553	596
42 / 1067	72 / 1829	536	592	780	630	679
42 / 1067	78 / 1981	558	617	821	659	709
42 / 1067	84 / 2134	577	641	858	684	739
51 / 1295	24 / 610	297	328	436	351	377
51 / 1295	30 / 762	324	361	495	387	421
51 / 1295	36 / 914	399	445	604	477	520
51 / 1295	42 / 1067	422	478	664	516	561
51 / 1295	48 / 1219	448	509	724	556	607
51 / 1295	54 / 1372	494	563	799	611	672
51 / 1295	60 / 1524	520	596	860	650	713
51 / 1295	66 / 1676	539	626	916	686	759
51 / 1295	72 / 1829	617	711	1029	776	855
51 / 1295	78 / 1981	645	746	1089	814	901
51 / 1295	84 / 2134	670	780	1150	855	947

Pricing is continued on the following page.

JNSAGB
Glass Add-On Screen – Beam-Mounted (Continued)

DIMENSIONS INCHES / MM		PRICING				
		18" LOW HEIGHT (L)				
H	W	Clear (CL)	Frost (FT)	Satin (FB)	Clear – Low Iron (LA)	Frost – Low Iron (LB)
42 / 1067	24 / 610	n/a	n/a	n/a	n/a	n/a
42 / 1067	30 / 762	n/a	n/a	n/a	n/a	n/a
42 / 1067	36 / 914	405	454	618	487	529
42 / 1067	42 / 1067	432	488	680	527	573
42 / 1067	48 / 1219	455	521	742	566	621
42 / 1067	54 / 1372	501	573	821	623	686
42 / 1067	60 / 1524	527	610	884	665	732
42 / 1067	66 / 1676	551	641	943	703	776
42 / 1067	72 / 1829	625	727	1057	793	876
42 / 1067	78 / 1981	654	761	1119	832	923
42 / 1067	84 / 2134	680	796	1182	876	971
51 / 1295	24 / 610	n/a	n/a	n/a	n/a	n/a
51 / 1295	30 / 762	n/a	n/a	n/a	n/a	n/a
51 / 1295	36 / 914	445	517	744	561	621
51 / 1295	42 / 1067	478	560	827	614	679
51 / 1295	48 / 1219	508	597	911	666	740
51 / 1295	54 / 1372	563	664	1007	733	822
51 / 1295	60 / 1524	594	710	1092	788	880
51 / 1295	66 / 1676	622	748	1169	836	937
51 / 1295	72 / 1829	706	847	1305	940	1051
51 / 1295	78 / 1981	741	889	1387	988	1116
51 / 1295	84 / 2134	773	936	1473	1044	1179

J N S A G W
Glass Add-On Screen – Worksurface-Mounted

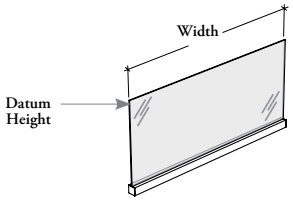

This screen mounts directly on a worksurface to create seated privacy and space division at various heights in a workstation.

WHAT'S INCLUDED
1 glass screen and mounting hardware.

WHAT'S EXCLUDED
Worksurface and Linking Strip for Glass Screen.

NOTES
The tempered glass is 1/4" (6 mm) thick.

Low Iron Glass Finishes (LA or LB) reduce the greenish render of standard glass. It must be used to match Glass Elevated Screen.

Frost Finishes (FT or LB) are single-sided etched, Satin (FB) is etched on both sides.

PRODUCT OPTIONS

Datum Height	Width	Width Reduction for Lateral Application	Corner Detail	Glass Finish	Mounting Hardware Finish
42, 51	18, 21, 24, 27, 30, 33, 36, 39, 42, 45, 48, 51, 54, 57, 60, 63, 66, 69, 72, 75, 78, 81, 84	**F** One Side Full Screen or Both Sides Shared Screens **H** One Side Shared Screen **S** Standard Width	**S** Standard	**Standard Glass:** **CL** Clear **FT** Frost **FB** Satin **Low Iron Glass:** **LA** Clear – Low Iron **LB** Frost – Low Iron	Foundation Mica Accent

SAMPLE ORDER CODE

JNSAGW 51	24	S	S	FT	74

DIMENSIONS
INCHES / MM

H	W
42 / 1067	18 / 457
42 / 1067	21 / 533
42 / 1067	24 / 610
42 / 1067	27 / 686
42 / 1067	30 / 762
42 / 1067	36 / 838
42 / 1067	36 / 914
42 / 1067	39 / 991
42 / 1067	42 / 1067
42 / 1067	45 / 1143
42 / 1067	48 / 1219
42 / 1067	51 / 1295
42 / 1067	54 / 1372
42 / 1067	57 / 1448
42 / 1067	60 / 1524
42 / 1067	63 / 1600
42 / 1067	66 / 1676
42 / 1067	69 / 1753
42 / 1067	72 / 1829
42 / 1067	75 / 1905
42 / 1067	78 / 1981
42 / 1067	81 / 2057
42 / 1067	84 / 2134

PRICING

Clear (CL)	Frost (FT)	Satin (FB)	Clear – Low Iron (LA)	Frost – Low Iron (LB)
268	281	327	290	300
275	292	347	302	319
285	302	367	318	331
295	316	384	328	347
303	327	407	345	362
346	370	455	385	408
369	396	488	413	438
376	406	506	426	450
380	412	523	436	463
386	421	538	447	476
394	433	557	456	487
419	458	590	485	521
425	466	609	496	530
435	477	624	506	544
438	484	641	516	556
445	495	658	528	568
451	502	675	536	581
494	546	727	582	626
516	572	759	610	655
524	581	776	621	668
530	589	792	631	682
536	600	811	643	695
543	609	826	652	706

Pricing is continued on the following page.

J N S A G W
Glass Add-On Screen – Worksurface-Mounted (Continued)

DIMENSIONS INCHES / MM		PRICING				
H	W	Clear (CL)	Frost (FT)	Satin (FB)	Clear – Low Iron (LA)	Frost – Low Iron (LB)
51 / 1295	18 / 457	290	314	392	328	350
51 / 1295	21 / 533	302	329	422	350	374
51 / 1295	24 / 610	316	347	451	369	394
51 / 1295	27 / 686	327	361	480	385	416
51 / 1295	30 / 762	340	379	509	407	440
51 / 1295	36 / 838	383	426	572	456	494
51 / 1295	36 / 914	409	456	615	488	529
51 / 1295	39 / 991	420	471	645	505	550
51 / 1295	42 / 1067	429	484	670	523	566
51 / 1295	45 / 1143	440	499	698	537	587
51 / 1295	48 / 1219	448	509	724	556	607
51 / 1295	51 / 1295	477	543	767	588	646
51 / 1295	54 / 1372	487	558	793	606	665
51 / 1295	57 / 1448	498	572	824	622	684
51 / 1295	60 / 1524	505	585	850	639	704
51 / 1295	63 / 1600	520	600	877	654	725
51 / 1295	66 / 1676	527	612	902	672	741
51 / 1295	69 / 1753	568	659	962	723	796
51 / 1295	72 / 1829	596	690	1007	754	832
51 / 1295	75 / 1905	607	704	1034	770	854
51 / 1295	78 / 1981	616	718	1061	788	873
51 / 1295	81 / 2057	624	732	1087	803	892
51 / 1295	84 / 2134	638	747	1116	822	913

J N S A F B

Fabric Add-On Screen – Beam-Mounted

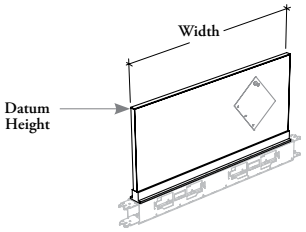

This screen mounts directly on top of a structural beam to add tackable surface, create seated privacy and space division at various heights in a workstation.

WHAT'S INCLUDED
1 fabric screen, 1 linking device and mounting hardware.

WHAT'S EXCLUDED
Structural Beam or Chicago Structural Beam.

NOTES
This fabric screen has the same fabric on both sides.

For a continuous look, mounting hardware finsh must match adjacent Structural Beam Cover top finish.

When 18" Low Height (L) option is specified, only Width Reduction for Lateral Application (S or Y) options are available.

PRODUCT OPTIONS

Beam Height	Datum Height	Width	Width Reduction for Lateral Application	Screen Finish	Frame and Hardware Finish
C Standard Height (28)	42, 51, 57	24, 30, 36, 42, 48, 54, 60, 66, 72, 78, 84	**A** Beam – Half	Fabric	Foundation
L Low Height (18)			**B** Beam – Full		Mica
			S Standard Width		Accent
			Y 120° Connection		

SAMPLE ORDER CODE

JNSAFB C	51	24	S	T540	74

DIMENSIONS INCHES / MM

PRICING

		28" STANDARD HEIGHT (C)							
H	W	Gr. A/COM	Gr. 1	Gr. 2	Gr. 3	Gr. 4	Gr. 5	Gr. 6	Gr. 7
42 / 1067	24 / 610	491	500	522	534	553	568	586	600
42 / 1067	30 / 762	502	514	542	559	581	601	618	635
42 / 1067	36 / 914	534	550	580	600	625	651	669	688
42 / 1067	42 / 1067	575	594	626	652	680	708	731	754
42 / 1067	48 / 1219	619	639	679	704	737	767	792	819
42 / 1067	54 / 1372	679	701	742	770	806	843	871	901
42 / 1067	60 / 1524	719	742	791	822	863	902	931	964
42 / 1067	66 / 1676	733	761	813	849	890	931	967	1000
42 / 1067	72 / 1829	766	796	851	887	935	980	1017	1056
42 / 1067	78 / 1981	811	839	902	941	989	1039	1079	1121
42 / 1067	84 / 2134	851	884	949	991	1046	1099	1141	1186
51 / 1295	24 / 610	509	528	560	581	607	632	653	674
51 / 1295	30 / 762	534	556	593	618	648	680	705	731
51 / 1295	36 / 914	575	600	645	673	710	747	776	806
51 / 1295	42 / 1067	626	653	704	737	778	822	855	887
51 / 1295	48 / 1219	680	708	766	805	851	897	936	973
51 / 1295	54 / 1372	747	778	842	884	937	988	1030	1073
51 / 1295	60 / 1524	798	832	906	951	1009	1066	1112	1159
51 / 1295	66 / 1676	822	861	937	986	1050	1114	1165	1215
51 / 1295	72 / 1829	861	906	986	1041	1109	1177	1232	1286
51 / 1295	78 / 1981	914	960	1047	1108	1181	1254	1313	1372
51 / 1295	84 / 2134	965	1014	1109	1173	1250	1328	1391	1453

Pricing is continued on the following page.

JNSAFB

Fabric Add-On Screen – Beam-Mounted (Continued)

DIMENSIONS INCHES / MM		PRICING							
		28" STANDARD HEIGHT (C) (CONTINUED)							
H	W	Gr. A/COM	Gr. 1	Gr. 2	Gr. 3	Gr. 4	Gr. 5	Gr. 6	Gr. 7
57 / 1448	24 / 610	653	673	712	737	769	799	825	853
57 / 1448	30 / 762	718	739	788	819	856	892	923	955
57 / 1448	36 / 914	802	828	883	918	965	1009	1042	1079
57 / 1448	42 / 1067	864	897	958	1000	1050	1101	1141	1184
57 / 1448	48 / 1219	929	967	1035	1080	1138	1195	1239	1286
57 / 1448	54 / 1372	1013	1053	1129	1179	1244	1305	1356	1409
57 / 1448	60 / 1524	1079	1122	1206	1263	1332	1401	1456	1515
57 / 1448	66 / 1676	1141	1190	1283	1343	1419	1494	1554	1618
57 / 1448	72 / 1829	1225	1276	1377	1443	1527	1608	1673	1739
57 / 1448	78 / 1981	1291	1346	1453	1527	1614	1704	1774	1846
57 / 1448	84 / 2134	1353	1415	1530	1607	1701	1797	1872	1950
		18" LOW HEIGHT (L)							
		Gr. A/COM	Gr. 1	Gr. 2	Gr. 3	Gr. 4	Gr. 5	Gr. 6	Gr. 7
42 / 1067	24 / 610	514	530	565	587	615	641	661	681
42 / 1067	30 / 762	538	560	600	624	658	690	713	740
42 / 1067	36 / 914	581	607	652	680	719	760	790	820
42 / 1067	42 / 1067	635	660	712	746	791	835	870	902
42 / 1067	48 / 1219	688	717	776	818	864	912	951	991
42 / 1067	54 / 1372	757	790	853	897	951	1003	1049	1093
42 / 1067	60 / 1524	809	846	918	967	1028	1087	1132	1181
42 / 1067	66 / 1676	831	872	951	1002	1068	1133	1187	1239
42 / 1067	72 / 1829	872	918	1002	1059	1129	1201	1256	1313
42 / 1067	78 / 1981	925	974	1063	1128	1204	1278	1339	1401
42 / 1067	84 / 2134	977	1029	1128	1194	1274	1355	1419	1484
51 / 1295	24 / 610	535	559	606	632	669	704	732	757
51 / 1295	30 / 762	568	601	651	683	727	769	802	836
51 / 1295	36 / 914	621	658	718	753	805	856	896	938
51 / 1295	42 / 1067	686	719	790	829	889	948	995	1035
51 / 1295	48 / 1219	749	788	863	918	981	1042	1094	1146
51 / 1295	54 / 1372	825	868	951	1010	1080	1148	1208	1266
51 / 1295	60 / 1524	887	936	1034	1095	1174	1250	1312	1377
51 / 1295	66 / 1676	921	973	1074	1141	1227	1315	1384	1455
51 / 1295	72 / 1829	969	1029	1138	1211	1305	1397	1470	1545
51 / 1295	78 / 1981	1029	1094	1208	1296	1395	1494	1574	1653
51 / 1295	84 / 2134	1092	1159	1286	1375	1480	1586	1668	1752

J N S A F W

Fabric Add-On Screen – Worksurface-Mounted

This screen mounts directly on a worksurface to add tackable surface, create seated privacy and space division at various heights in a workstation.

WHAT'S INCLUDED
1 fabric screen, 1 linking device and mounting hardware.

WHAT'S EXCLUDED
Worksurfaces.

NOTES
This fabric screen has the same fabric on both sides.

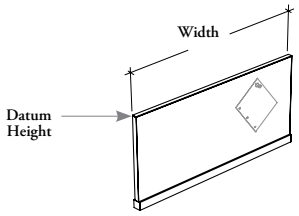

PRODUCT OPTIONS

Datum Height	Width	Width Reduction for Lateral Application	Screen Finish	Frame and Hardware Finish
42, 51, 57	18, 21, 24, 27, 30, 33, 36, 39, 42, 45, 48, 51, 54, 57, 60, 63, 66, 69, 72, 75, 78, 81, 84	**F** One Side Full Screen or Both Sides Shared Screens **H** One Side Shared Screen **S** Standard Width	Fabric	Foundation Mica Accent

SAMPLE ORDER CODE

JNSAFW 51	24	S	T540	74

DIMENSIONS INCHES / MM

H	W
42 / 1067	18 / 457
42 / 1067	21 / 533
42 / 1067	24 / 610
42 / 1067	27 / 686
42 / 1067	30 / 762
42 / 1067	36 / 838
42 / 1067	36 / 914
42 / 1067	39 / 991
42 / 1067	42 / 1067
42 / 1067	45 / 1143
42 / 1067	48 / 1219
42 / 1067	51 / 1295
42 / 1067	54 / 1372
42 / 1067	57 / 1448
42 / 1067	60 / 1524
42 / 1067	63 / 1600
42 / 1067	66 / 1676
42 / 1067	69 / 1753
42 / 1067	72 / 1829
42 / 1067	75 / 1905
42 / 1067	78 / 1981
42 / 1067	81 / 2057
42 / 1067	84 / 2134

PRICING

Gr. A/COM	Gr. 1	Gr. 2	Gr. 3	Gr. 4	Gr. 5	Gr. 6	Gr. 7
465	473	494	502	517	530	542	556
484	496	514	528	543	560	572	586
506	516	538	554	572	588	602	618
513	524	550	563	583	602	619	632
522	532	560	575	597	619	635	653
542	557	586	602	626	651	668	686
548	561	593	612	639	661	681	702
565	581	614	635	661	688	711	732
582	601	635	659	688	717	737	761
601	619	658	680	710	739	764	790
619	639	679	704	737	767	792	819
653	674	717	742	777	812	838	864
673	695	737	766	802	838	864	892
690	713	760	790	826	864	892	923
708	732	780	812	851	889	921	951
713	738	790	822	864	906	937	970
718	746	797	829	872	915	949	983
739	767	822	857	902	944	981	1017
746	773	828	868	914	958	996	1034
763	792	853	889	937	984	1027	1063
780	812	872	912	962	1010	1049	1092
798	829	892	936	986	1036	1079	1121
818	851	915	958	1013	1065	1108	1148

Pricing is continued on the following page.

JNSAFW

Fabric Add-On Screen – Worksurface-Mounted (Continued)

DIMENSIONS INCHES / MM		PRICING							
H	W	Gr. A/COM	Gr. 1	Gr. 2	Gr. 3	Gr. 4	Gr. 5	Gr. 6	Gr. 7
51 / 1295	18 / 457	477	494	516	534	556	575	593	610
51 / 1295	21 / 533	503	517	548	566	589	614	631	652
51 / 1295	24 / 610	529	546	577	600	625	652	672	694
51 / 1295	27 / 686	539	559	594	618	646	674	698	719
51 / 1295	30 / 762	554	572	610	635	668	699	724	749
51 / 1295	36 / 838	577	600	640	668	702	734	763	791
51 / 1295	36 / 914	587	610	654	683	720	759	786	818
51 / 1295	39 / 991	610	635	683	713	754	792	824	856
51 / 1295	42 / 1067	635	660	711	746	788	828	861	894
51 / 1295	45 / 1143	658	683	737	773	819	863	897	935
51 / 1295	48 / 1219	680	708	766	805	851	897	936	973
51 / 1295	51 / 1295	719	752	812	851	901	949	988	1030
51 / 1295	54 / 1372	739	773	836	879	931	983	1027	1068
51 / 1295	57 / 1448	764	798	864	911	965	1020	1063	1108
51 / 1295	60 / 1524	786	822	890	938	996	1054	1099	1145
51 / 1295	63 / 1600	797	832	909	956	1017	1076	1124	1173
51 / 1295	66 / 1676	806	846	921	971	1034	1095	1146	1197
51 / 1295	69 / 1753	829	872	951	1003	1070	1133	1187	1239
51 / 1295	72 / 1829	839	883	967	1020	1088	1158	1210	1266
51 / 1295	75 / 1905	863	909	995	1049	1121	1191	1247	1304
51 / 1295	78 / 1981	884	931	1020	1079	1152	1226	1284	1343
51 / 1295	81 / 2057	909	956	1047	1109	1187	1263	1322	1383
51 / 1295	84 / 2134	929	980	1074	1138	1217	1293	1356	1421
57 / 1448	18 / 457	609	624	654	675	702	727	747	767
57 / 1448	21 / 533	640	659	695	717	746	773	797	820
57 / 1448	24 / 610	673	694	732	759	790	820	846	872
57 / 1448	27 / 686	705	727	769	797	832	868	894	923
57 / 1448	30 / 762	737	761	809	838	877	914	943	974
57 / 1448	36 / 838	786	812	861	894	937	977	1010	1042
57 / 1448	36 / 914	817	842	894	931	976	1021	1056	1092
57 / 1448	39 / 991	842	872	929	970	1017	1065	1101	1139
57 / 1448	42 / 1067	872	906	967	1007	1059	1109	1147	1190
57 / 1448	45 / 1143	902	936	1002	1043	1099	1152	1195	1238
57 / 1448	48 / 1219	929	967	1035	1080	1138	1195	1239	1286
57 / 1448	51 / 1295	977	1015	1089	1138	1198	1260	1305	1355
57 / 1448	54 / 1372	1007	1046	1124	1174	1238	1299	1351	1402
57 / 1448	57 / 1448	1036	1079	1160	1215	1279	1346	1398	1453
57 / 1448	60 / 1524	1066	1109	1194	1249	1320	1390	1444	1502
57 / 1448	63 / 1600	1093	1139	1227	1286	1358	1431	1491	1550
57 / 1448	66 / 1676	1124	1173	1264	1325	1402	1478	1539	1600
57 / 1448	69 / 1753	1172	1220	1318	1382	1462	1540	1602	1666
57 / 1448	72 / 1829	1201	1253	1353	1421	1502	1586	1648	1714
57 / 1448	75 / 1905	1231	1284	1387	1455	1542	1629	1697	1764
57 / 1448	78 / 1981	1260	1315	1422	1493	1582	1672	1741	1812
57 / 1448	81 / 2057	1290	1346	1456	1532	1625	1714	1790	1863
57 / 1448	84 / 2134	1317	1377	1491	1569	1666	1759	1835	1912

J N S A B E

Felt Add-On Screen – Beam-Mounted

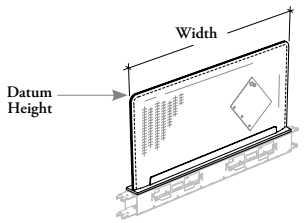

This screen mounts directly on top of a structural beam to add acoustical and tackable surface, create seated privacy and space division at various heights in a workstation.

WHAT'S INCLUDED
1 felt screen, 1 beam cover and mounting hardware.

WHAT'S EXCLUDED
Structural Beam or Chicago Structural Beam.

NOTES
For a continuous look, beam cover finish must match adjacent Structural Beam Cover top finish.

The Width Reduction for Lateral Application (S) option is only available with Two End Caps (T) option.

When 18" Low Height (L) option is specified, only Width Reduction for Lateral Application (S or Y) options are available.

PRODUCT OPTIONS

Beam Height	Datum Height	Width	Width Reduction for Lateral Application	Corner Detail	Top Cover End Cap	Felt Finish	Stitches Finish	Mounting Hardware Finish	Beam Cover Finish
C Standard Height (28) **L** Low Height (18)	42, 51, 57	24, 30, 36, 42, 48, 54, 60, 66, 72, 78, 84	**A** Beam – Half **B** Beam – Full **S** Standard Width **Y** 120° Connection	**R** Radius	**O** One End Cap **T** Two End Caps **N** No End Caps	Loft	**C** Carbon Coordinate **E** Shale Coordinate **G** Carrara Coordinate **M** Umber Coordinate	Foundation Mica Accent	Foundation Mica Accent

SAMPLE ORDER CODE

JNSABE C	51	24	S	R	O	RB11	C	74	52

DIMENSIONS INCHES / MM

H	W
42 / 1067	24 / 610
42 / 1067	30 / 762
42 / 1067	36 / 914
42 / 1067	42 / 1067
42 / 1067	48 / 1219
42 / 1067	54 / 1372
42 / 1067	60 / 1524
42 / 1067	66 / 1676
42 / 1067	72 / 1829
42 / 1067	78 / 1981
42 / 1067	84 / 2134

PRICING

28" STANDARD HEIGHT (C)
379
435
505
560
616
686
740
796
868
925
978

DIMENSIONS INCHES / MM

H	W
51 / 1295	24 / 610
51 / 1295	30 / 762
51 / 1295	36 / 914
51 / 1295	42 / 1067
51 / 1295	48 / 1219
51 / 1295	54 / 1372
51 / 1295	60 / 1524
51 / 1295	66 / 1676
51 / 1295	72 / 1829
51 / 1295	78 / 1981
51 / 1295	84 / 2134

PRICING

28" STANDARD HEIGHT (C)
473
550
646
724
802
894
974
1053
1147
1226
1304

Pricing is continued on the following page.

JNSABE

Felt Add-On Screen – Beam-Mounted (Continued)

DIMENSIONS INCHES / MM		PRICING
H	W	28" STANDARD HEIGHT (C) (CONTINUED)
57 / 1448	24 / 610	534
57 / 1448	30 / 762	625
57 / 1448	36 / 914	737
57 / 1448	42 / 1067	831
57 / 1448	48 / 1219	926
57 / 1448	54 / 1372	1034
57 / 1448	60 / 1524	1128
57 / 1448	66 / 1676	1220
57 / 1448	72 / 1829	1333
57 / 1448	78 / 1981	1427
57 / 1448	84 / 2134	1520

H	W	18" LOW HEIGHT (L)
42 / 1067	24 / 610	484
42 / 1067	30 / 762	561
42 / 1067	36 / 914	661
42 / 1067	42 / 1067	741
42 / 1067	48 / 1219	824
42 / 1067	54 / 1372	918
42 / 1067	60 / 1524	1001
42 / 1067	66 / 1676	1082
42 / 1067	72 / 1829	1179
42 / 1067	78 / 1981	1261
42 / 1067	84 / 2134	1341

H	W	18" LOW HEIGHT (L)
51 / 1295	24 / 610	580
51 / 1295	30 / 762	676
51 / 1295	36 / 914	802
51 / 1295	42 / 1067	906
51 / 1295	48 / 1219	1010
51 / 1295	54 / 1372	1126
51 / 1295	60 / 1524	1235
51 / 1295	66 / 1676	1337
51 / 1295	72 / 1829	1457
51 / 1295	78 / 1981	1561
51 / 1295	84 / 2134	1666

J N S A E W

Felt Add-On Screen – Worksurface-Mounted

This screen mounts directly on top of a worksurface to add acoustical and tackable surface, create seated privacy and space division at various heights in a workstation.

WHAT'S INCLUDED
1 felt screen and mounting hardware.

WHAT'S EXCLUDED
Worksurfaces.

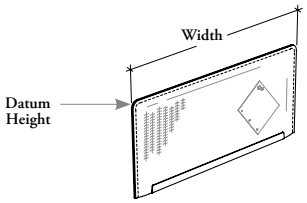

PRODUCT OPTIONS

Datum Height	Width	Width Reduction for Lateral Application	Corner Detail	Felt Finish	Stitches Finish	Mounting Hardware Finish
42, 51, 57	18, 21, 24, 27, 30, 33, 36, 39, 42, 45, 48, 51, 54, 57, 60, 63, 66, 69, 72, 75, 78, 81, 84	**S** Standard Width	**R** Radius	Loft	**C** Carbon Coordinate **E** Shale Coordinate **G** Carrara Coordinate **M** Umber Coordinate	Foundation Mica Accent

SAMPLE ORDER CODE

JNSAEW 51	24	S	R	RB11	C	74

DIMENSIONS INCHES / MM		PRICING
H	W	
42 / 1067	18 / 457	284
42 / 1067	21 / 533	302
42 / 1067	24 / 610	324
42 / 1067	27 / 686	345
42 / 1067	30 / 762	363
42 / 1067	36 / 838	403
42 / 1067	36 / 914	421
42 / 1067	39 / 991	444
42 / 1067	42 / 1067	463
42 / 1067	45 / 1143	484
42 / 1067	48 / 1219	503
42 / 1067	51 / 1295	539
42 / 1067	54 / 1372	561
42 / 1067	57 / 1448	583
42 / 1067	60 / 1524	604
42 / 1067	63 / 1600	623
42 / 1067	66 / 1676	645
42 / 1067	69 / 1753	681
42 / 1067	72 / 1829	703
42 / 1067	75 / 1905	723
42 / 1067	78 / 1981	741
42 / 1067	81 / 2057	764
42 / 1067	84 / 2134	783

DIMENSIONS INCHES / MM		PRICING
H	W	
51 / 1295	18 / 457	353
51 / 1295	21 / 533	383
51 / 1295	24 / 610	416
51 / 1295	27 / 686	448
51 / 1295	30 / 762	479
51 / 1295	36 / 838	529
51 / 1295	36 / 914	561
51 / 1295	39 / 991	592
51 / 1295	42 / 1067	624
51 / 1295	45 / 1143	658
51 / 1295	48 / 1219	689
51 / 1295	51 / 1295	738
51 / 1295	54 / 1372	770
51 / 1295	57 / 1448	803
51 / 1295	60 / 1524	835
51 / 1295	63 / 1600	865
51 / 1295	66 / 1676	900
51 / 1295	69 / 1753	948
51 / 1295	72 / 1829	981
51 / 1295	75 / 1905	1012
51 / 1295	78 / 1981	1043
51 / 1295	81 / 2057	1078
51 / 1295	84 / 2134	1108

JNSAEW

Felt Add-On Screen – Worksurface-Mounted (Continued)

DIMENSIONS INCHES / MM		PRICING
H	W	
57 / 1448	18 / 457	401
57 / 1448	21 / 533	438
57 / 1448	24 / 610	478
57 / 1448	27 / 686	520
57 / 1448	30 / 762	558
57 / 1448	36 / 838	614
57 / 1448	36 / 914	653
57 / 1448	39 / 991	695
57 / 1448	42 / 1067	734
57 / 1448	45 / 1143	775
57 / 1448	48 / 1219	813
57 / 1448	51 / 1295	870
57 / 1448	54 / 1372	909
57 / 1448	57 / 1448	949
57 / 1448	60 / 1524	989
57 / 1448	63 / 1600	1029
57 / 1448	66 / 1676	1068
57 / 1448	69 / 1753	1126
57 / 1448	72 / 1829	1166
57 / 1448	75 / 1905	1205
57 / 1448	78 / 1981	1245
57 / 1448	81 / 2057	1285
57 / 1448	84 / 2134	1324

J N S W G W

Glass Edge Screen – Worksurface-Mounted

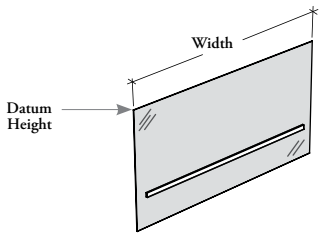

This screen mounts off-module only to the worksurface creating casual privacy and physical separation.

WHAT'S INCLUDED
1 glass edge screen and mounting hardware.

WHAT'S EXCLUDED
Worksurfaces.

NOTES
The tempered glass is 1/4" (6 mm) thick.

Low Iron Glass Finishes (LB) reduce the greenish render of standard glass. It must be used to match Glass Elevated Screen.

Frost Finish (FT) is single-sided etched.

PRODUCT OPTIONS

Modesty Base Height	Datum Height	Width	Glass Finish	Hardware Finish
18 18" from Floor	42, 51	24, 27, 30, 33, 36, 39, 42, 45, 48, 51, 54, 57, 60, 63, 66, 69	**Standard Glass:** **FT** Frost **Low Iron Glass:** **LB** Frost – Low Iron	Foundation Mica Accent

SAMPLE ORDER CODE

JNSWGW 18	51	24	LB	74

DIMENSIONS INCHES / MM

H	W
42 / 1067	24 / 610
42 / 1067	27 / 686
42 / 1067	30 / 762
42 / 1067	36 / 838
42 / 1067	36 / 914
42 / 1067	39 / 991
42 / 1067	42 / 1067
42 / 1067	45 / 1143
42 / 1067	48 / 1219
42 / 1067	51 / 1295
42 / 1067	54 / 1372
42 / 1067	57 / 1448
42 / 1067	60 / 1524
42 / 1067	63 / 1600
42 / 1067	66 / 1676
42 / 1067	69 / 1753

PRICING

Frost (FT)	Frost – Low Iron (LB)
369	419
409	466
449	513
492	560
531	607
573	654
612	702
653	748
695	793
735	842
776	887
818	936
858	984
901	1032
943	1082
985	1130

DIMENSIONS INCHES / MM

H	W
51 / 1295	24 / 610
51 / 1295	27 / 686
51 / 1295	30 / 762
51 / 1295	36 / 838
51 / 1295	36 / 914
51 / 1295	39 / 991
51 / 1295	42 / 1067
51 / 1295	45 / 1143
51 / 1295	48 / 1219
51 / 1295	51 / 1295
51 / 1295	54 / 1372
51 / 1295	57 / 1448
51 / 1295	60 / 1524
51 / 1295	63 / 1600
51 / 1295	66 / 1676
51 / 1295	69 / 1753

PRICING

Frost (FT)	Frost – Low Iron (LB)
465	535
514	592
563	650
612	708
660	764
708	821
761	882
806	936
856	995
905	1051
954	1110
1002	1167
1053	1225
1102	1283
1152	1341
1203	1398

J N S E S B

Solid Elevated Screen – Beam-Mounted

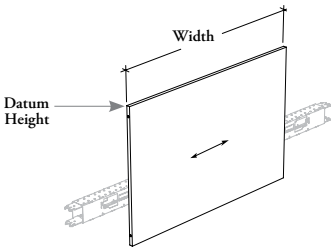

This screen mounts directly on front of a structural beam to create privacy and physical separation.

WHAT'S INCLUDED
1 solid screen, linking devices and caps (as specified) and mounting hardware.

WHAT'S EXCLUDED
Structural Beam, Chicago Structural Beam, Sit and Slide Screens.

NOTES
The solid panel is 1" thick.

For Width Extension for Corner Applications details, refer to the Application Guide.

PRODUCT OPTIONS

Modesty Base Height	Datum Height	Width	Width Extension for Corner Application	Corner Detail	Alignment Holes	Screen Finish
10 10" from Floor	42, 51, 57	24, 30, 36, 42, 48, 54, 60, 66, 72, 78, 84	**B** Both Sides **L** One Side – Left **R** One Side – Right **S** Standard Width	**S** Standard	**N** Without Alignment Holes **W** With Alignment Holes (Shown)	Source Laminate

SAMPLE ORDER CODE

JNSESB 10	51	24	S	S	N	XS

DIMENSIONS INCHES / MM

H	W
42 / 1067	24 / 610
42 / 1067	30 / 762
42 / 1067	36 / 914
42 / 1067	42 / 1067
42 / 1067	48 / 1219
42 / 1067	54 / 1372
42 / 1067	60 / 1524
42 / 1067	66 / 1676
42 / 1067	72 / 1829
42 / 1067	78 / 1981
42 / 1067	84 / 2134

PRICING

BOTH SIDES (B)	ONE SIDE – LEFT OR RIGHT (L or R) OR STANDARD WIDTH (S)
n/a	299
n/a	324
n/a	347
n/a	370
392	392
434	434
471	471
495	495
520	520
538	538
563	563

Pricing is continued on the following page.

JNSESB

Solid Elevated Screen – Beam-Mounted (Continued)

DIMENSIONS INCHES / MM		PRICING	
H	W	BOTH SIDES (B)	ONE SIDE – LEFT OR RIGHT (L or R) OR STANDARD WIDTH (S)
51 / 1295	24 / 610	n/a	327
51 / 1295	30 / 762	n/a	356
51 / 1295	36 / 914	n/a	384
51 / 1295	42 / 1067	n/a	413
51 / 1295	48 / 1219	443	443
51 / 1295	54 / 1372	487	487
51 / 1295	60 / 1524	532	532
51 / 1295	66 / 1676	561	561
51 / 1295	72 / 1829	589	589
51 / 1295	78 / 1981	619	619
51 / 1295	84 / 2134	648	648
57 / 1448	24 / 610	n/a	346
57 / 1448	30 / 762	n/a	378
57 / 1448	36 / 914	n/a	411
57 / 1448	42 / 1067	n/a	443
57 / 1448	48 / 1219	476	476
57 / 1448	54 / 1372	525	525
57 / 1448	60 / 1524	573	573
57 / 1448	66 / 1676	607	607
57 / 1448	72 / 1829	640	640
57 / 1448	78 / 1981	672	672
57 / 1448	84 / 2134	704	704

JNSESW

Solid Elevated Screen – Worksurface-Mounted

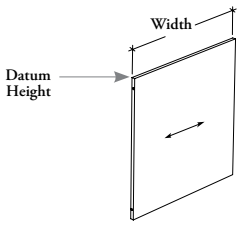

This screen mounts directly to the worksurface to create privacy and physical separation between workstation and the corridor.

WHAT'S INCLUDED
1 solid screen, linking devices and caps (as specified) and mounting hardware.

WHAT'S EXCLUDED
Worksurfaces, Structural Legs, Sit and Slide Screens.

NOTES
The solid panel is 1" thick.

For Width Extension for Corner Applications details, refer to the Application Guide.

PRODUCT OPTIONS

Mounting Style	Modesty Base Height	Datum Height	Width	Width Extension for Corner Application	Corner Detail	Alignment Holes	Screen Finish
L Support Connection on Left **R** Support Connection on Right **W** Worksurface Only	**10** 10" from Floor	42, 51, 57	24, 27, 30, 33, 36, 39, 42, 45, 48, 51, 54, 60, 63, 66, 69, 72, 75, 78, 81, 84	**B** Both Sides **L** One Side – Left **R** One Side – Right **S** Standard Width	**S** Standard	**N** Without Alignment Holes **W** With Alignment Holes (Shown)	Source Laminate

SAMPLE ORDER CODE

JNSESW L	10	51	48	S	S	N	XS

DIMENSIONS
INCHES / MM

PRICING

H	W	WORKSURFACE ONLY (W) BOTH SIDES (B)	SUPPORT CONNECTION ON LEFT OR RIGHT (L or R)
42 / 1067	48 / 1219	392	392
42 / 1067	54 / 1372	434	434
42 / 1067	60 / 1524	471	471
42 / 1067	66 / 1676	495	495
42 / 1067	72 / 1829	520	520
42 / 1067	78 / 1981	538	538
42 / 1067	84 / 2134	563	563
51 / 1295	48 / 1219	443	443
51 / 1295	54 / 1372	487	487
51 / 1295	60 / 1524	532	532
51 / 1295	66 / 1676	561	561
51 / 1295	72 / 1829	589	589
51 / 1295	78 / 1981	619	619
51 / 1295	84 / 2134	648	648
57 / 1448	48 / 1219	476	476
57 / 1448	54 / 1372	525	525
57 / 1448	60 / 1524	573	573
57 / 1448	66 / 1676	607	607
57 / 1448	72 / 1829	640	640
57 / 1448	78 / 1981	672	672
57 / 1448	84 / 2134	704	704

Pricing is continued on the following page.

JNSESW
Solid Elevated Screen – Worksurface-Mounted (Continued)

DIMENSIONS INCHES / MM		PRICING	
		WORKSURFACE ONLY (W)	SUPPORT CONNECTION ON LEFT OR RIGHT (L or R)
H	W	ONE-SIDE – LEFT OR RIGHT (L or R) OR STANDARD WIDTH (S)	
42 / 1067	24 / 610	299	n/a
42 / 1067	27 / 686	313	n/a
42 / 1067	30 / 762	324	n/a
42 / 1067	36 / 838	333	n/a
42 / 1067	36 / 914	347	n/a
42 / 1067	39 / 991	357	n/a
42 / 1067	42 / 1067	370	370
42 / 1067	45 / 1143	380	n/a
42 / 1067	48 / 1219	392	392
42 / 1067	51 / 1295	412	n/a
42 / 1067	54 / 1372	434	434
42 / 1067	57 / 1448	450	n/a
42 / 1067	60 / 1524	471	471
42 / 1067	63 / 1600	483	n/a
42 / 1067	66 / 1676	495	495
42 / 1067	69 / 1753	505	n/a
42 / 1067	72 / 1829	520	520
42 / 1067	75 / 1905	529	n/a
42 / 1067	78 / 1981	538	538
42 / 1067	81 / 2057	552	n/a
42 / 1067	84 / 2134	563	563
51 / 1295	24 / 610	327	n/a
51 / 1295	27 / 686	343	n/a
51 / 1295	30 / 762	356	n/a
51 / 1295	36 / 838	372	n/a
51 / 1295	36 / 914	384	n/a
51 / 1295	39 / 991	401	n/a
51 / 1295	42 / 1067	413	413
51 / 1295	45 / 1143	428	n/a
51 / 1295	48 / 1219	443	443
51 / 1295	51 / 1295	465	n/a
51 / 1295	54 / 1372	487	487
51 / 1295	57 / 1448	508	n/a
51 / 1295	60 / 1524	532	532
51 / 1295	63 / 1600	548	n/a
51 / 1295	66 / 1676	561	561
51 / 1295	69 / 1753	577	n/a
51 / 1295	72 / 1829	589	589
51 / 1295	75 / 1905	606	n/a
51 / 1295	78 / 1981	619	619
51 / 1295	81 / 2057	632	n/a
51 / 1295	84 / 2134	648	648

Pricing is continued on the following page.

J N S E S W

Solid Elevated Screen – Worksurface-Mounted (Continued)

DIMENSIONS
INCHES / MM

PRICING

H	W	WORKSURFACE ONLY (W) ONE-SIDE – LEFT OR RIGHT (L or R) OR STANDARD WIDTH (S) (CONTINUED)	SUPPORT CONNECTION ON LEFT OR RIGHT (L or R) (CONTINUED)
57 / 1448	24 / 610	346	n/a
57 / 1448	27 / 686	361	n/a
57 / 1448	30 / 762	378	n/a
57 / 1448	36 / 838	394	n/a
57 / 1448	36 / 914	411	n/a
57 / 1448	39 / 991	426	n/a
57 / 1448	42 / 1067	443	443
57 / 1448	45 / 1143	461	n/a
57 / 1448	48 / 1219	476	476
57 / 1448	51 / 1295	500	n/a
57 / 1448	54 / 1372	525	525
57 / 1448	57 / 1448	550	n/a
57 / 1448	60 / 1524	573	573
57 / 1448	63 / 1600	589	n/a
57 / 1448	66 / 1676	607	607
57 / 1448	69 / 1753	622	n/a
57 / 1448	72 / 1829	640	640
57 / 1448	75 / 1905	654	n/a
57 / 1448	78 / 1981	672	672
57 / 1448	81 / 2057	688	n/a
57 / 1448	84 / 2134	704	704

J N S E G B

Glass Elevated Screen – Beam-Mounted

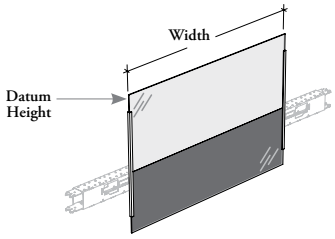

This screen mounts directly on front of a structural beam only to create privacy and physical separation. The lower portion of the screen which is back-painted acts as a modesty panel.

WHAT'S INCLUDED
1 glass screen and mounting hardware.

WHAT'S EXCLUDED
Structural Beam or Chicago Structural Beam.

NOTES
The tempered glass is 1/4" (6mm) thick.

Frost –Low Iron Finish (LB) is single-sided etched.

For Width Extension for Corner Applications details, refer to the Application Guide.

PRODUCT OPTIONS

Modesty Base Height	Datum Height	Width	Width Extension for Corner Application	Corner Detail	Glass Finish	Glass Finish – Modesty Height	Hardware Finish
10 10" from Floor	42, 51	24, 30, 36, 42, 48, 54, 60, 66, 72, 78, 84	**B** Both Sides **L** One Side – Left **R** One Side – Right **S** Standard Width	**S** Standard	**LA** Clear – Low Iron **LB** Frost – Low Iron	Back-Painted	Foundation Mica Accent

SAMPLE ORDER CODE

JNSEGB 10	42	60	L	S	LB	K1	74

DIMENSIONS
INCHES / MM

H	W
42 / 1067	24 / 610
42 / 1067	30 / 762
42 / 1067	36 / 914
42 / 1067	42 / 1067
42 / 1067	48 / 1219
42 / 1067	54 / 1372
42 / 1067	60 / 1524
42 / 1067	66 / 1676
42 / 1067	72 / 1829
42 / 1067	78 / 1981
42 / 1067	84 / 2134

PRICING

BOTH SIDES (B)		ONE – LEFT OR RIGHT (L or R) OR STANDARD WIDTH (S)	
Clear – Low Iron (LA)	Frost – Low Iron (LB)	Clear – Low Iron (LA)	Frost – Low Iron (LB)
n/a	n/a	849	885
n/a	n/a	913	959
n/a	n/a	976	1032
n/a	n/a	1042	1108
1107	1182	1107	1182
1169	1256	1169	1256
1237	1329	1237	1329
1298	1404	1298	1404
1364	1479	1364	1479
1429	1551	1429	1551
1493	1626	1493	1626

Pricing is continued on the following page.

J N S E G B

Glass Elevated Screen – Beam-Mounted (Continued)

DIMENSIONS INCHES / MM		PRICING			
		BOTH SIDES (B)		ONE – LEFT OR RIGHT (L or R) OR STANDARD WIDTH (S)	
H	W	Clear – Low Iron (LA)	Frost – Low Iron (LB)	Clear – Low Iron (LA)	Frost – Low Iron (LB)
51 / 1295	24 / 610	n/a	n/a	923	972
51 / 1295	30 / 762	n/a	n/a	1005	1064
51 / 1295	36 / 914	n/a	n/a	1087	1159
51 / 1295	42 / 1067	n/a	n/a	1168	1254
51 / 1295	48 / 1219	1250	1347	1250	1347
51 / 1295	54 / 1372	1333	1441	1333	1441
51 / 1295	60 / 1524	1414	1536	1414	1536
51 / 1295	66 / 1676	1495	1630	1495	1630
51 / 1295	72 / 1829	1579	1724	1579	1724
51 / 1295	78 / 1981	1659	1817	1659	1817
51 / 1295	84 / 2134	1742	1913	1742	1913

J N S E G W

Glass Elevated Screen – Worksurface-Mounted

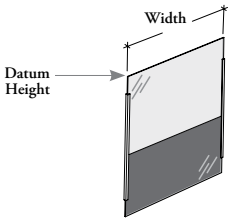

This screen mounts directly to the worksurface to create privacy and physical separation between workstation and the corridor. The lower portion of the screen which is back-painted acts as a modesty panel.

WHAT'S INCLUDED
1 glass screen and mounting hardware.

WHAT'S EXCLUDED
Worksurfaces, Structural Legs and Linking Strip for Glass Screen.

NOTES
The tempered glass is 1/4" (6mm) thick.

Frost – Low Iron Finish (LB) is single-sided etched.

For Width Extension for Corner Applications details, refer to the Application Guide.

PRODUCT OPTIONS

Mounting Style	Modesty Base Height	Datum Height	Width	Width Extension for Corner Application	Corner Detail	Glass Finish	Glass Finish – Modesty Height	Hardware Finish
L Support Connection on Left **R** Support Connection on Right **W** Worksurface Only	**10** 10" from Floor	42, 51	24, 27, 30, 33, 36, 39, 42, 45, 48, 51, 54, 60, 63, 66, 69, 72, 75, 78, 81, 84	**B** Both Sides **L** One Side – Left **R** One Side – Right **S** Standard Width	**S** Standard	**LA** Clear – Low Iron **LB** Frost – Low Iron	Back-Painted	Foundation Mica Accent

SAMPLE ORDER CODE

JNSEGW R	10	51	42	S	S	LA	K1	74

DIMENSIONS
INCHES / MM

PRICING

		WORKSURFACE ONLY (W)		SUPPORT CONNECTION ON LEFT OR RIGHT (L or R)	
		BOTH SIDES (B)			
H	W	Clear – Low Iron (LA)	Frost – Low Iron (LB)	Clear – Low Iron (LA)	Frost – Low Iron (LB)
42 / 1067	48 / 1219	1107	1182	1107	1182
42 / 1067	54 / 1372	1169	1256	1169	1256
42 / 1067	60 / 1524	1237	1329	1237	1329
42 / 1067	66 / 1676	1298	1404	1298	1404
42 / 1067	72 / 1829	1364	1479	1364	1479
42 / 1067	78 / 1981	1429	1551	1429	1551
42 / 1067	84 / 2134	1493	1626	1493	1626
51 / 1295	48 / 1219	1250	1347	1250	1347
51 / 1295	54 / 1372	1333	1441	1333	1441
51 / 1295	60 / 1524	1414	1536	1414	1536
51 / 1295	66 / 1676	1495	1630	1495	1630
51 / 1295	72 / 1829	1579	1724	1579	1724
51 / 1295	78 / 1981	1659	1817	1659	1817
51 / 1295	84 / 2134	1742	1913	1742	1913

Pricing is continued on the following page.

J N S E G W

Glass Elevated Screen – Worksurface-Mounted (Continued)

DIMENSIONS INCHES / MM		PRICING			
		WORKSURFACE ONLY (W)		SUPPORT CONNECTION ON LEFT OR RIGHT (L or R)	
		ONE SIDE – LEFT OR RIGHT (L or R) OR STANDARD WIDTH (S)			
H	W	Clear – Low Iron (LA)	Frost – Low Iron (LB)	Clear – Low Iron (LA)	Frost – Low Iron (LB)
42 / 1067	24 / 610	849	885	n/a	n/a
42 / 1067	27 / 686	880	922	n/a	n/a
42 / 1067	30 / 762	913	959	n/a	n/a
42 / 1067	36 / 838	947	996	n/a	n/a
42 / 1067	36 / 914	976	1032	n/a	n/a
42 / 1067	39 / 991	1009	1070	n/a	n/a
42 / 1067	42 / 1067	1042	1108	1042	1108
42 / 1067	45 / 1143	1074	1145	n/a	n/a
42 / 1067	48 / 1219	1107	1182	1107	1182
42 / 1067	51 / 1295	1138	1218	n/a	n/a
42 / 1067	54 / 1372	1169	1256	1169	1256
42 / 1067	57 / 1448	1204	1293	n/a	n/a
42 / 1067	60 / 1524	1237	1329	1237	1329
42 / 1067	63 / 1600	1267	1366	n/a	n/a
42 / 1067	66 / 1676	1298	1404	1298	1404
42 / 1067	69 / 1753	1333	1441	n/a	n/a
42 / 1067	72 / 1829	1364	1479	1364	1479
42 / 1067	75 / 1905	1397	1515	n/a	n/a
42 / 1067	78 / 1981	1429	1551	1429	1551
42 / 1067	81 / 2057	1460	1589	n/a	n/a
42 / 1067	84 / 2134	1493	1626	1493	1626
51 / 1295	24 / 610	923	972	n/a	n/a
51 / 1295	27 / 686	964	1017	n/a	n/a
51 / 1295	30 / 762	1005	1064	n/a	n/a
51 / 1295	36 / 838	1046	1112	n/a	n/a
51 / 1295	36 / 914	1087	1159	n/a	n/a
51 / 1295	39 / 991	1128	1205	n/a	n/a
51 / 1295	42 / 1067	1168	1254	1168	1254
51 / 1295	45 / 1143	1209	1302	n/a	n/a
51 / 1295	48 / 1219	1250	1347	1250	1347
51 / 1295	51 / 1295	1291	1393	n/a	n/a
51 / 1295	54 / 1372	1333	1441	1333	1441
51 / 1295	57 / 1448	1372	1488	n/a	n/a
51 / 1295	60 / 1524	1414	1536	1414	1536
51 / 1295	63 / 1600	1455	1582	n/a	n/a
51 / 1295	66 / 1676	1495	1630	1495	1630
51 / 1295	69 / 1753	1537	1676	n/a	n/a
51 / 1295	72 / 1829	1579	1724	1579	1724
51 / 1295	75 / 1905	1618	1770	n/a	n/a
51 / 1295	78 / 1981	1659	1817	1659	1817
51 / 1295	81 / 2057	1699	1864	n/a	n/a
51 / 1295	84 / 2134	1742	1913	1742	1913

J N S E F B

Fabric Elevated Screen – Beam-Mounted

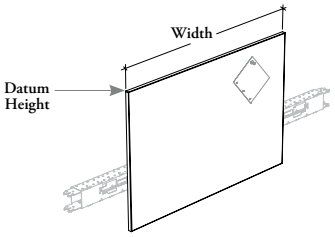

This screen mounts directly on side of a structural beam to add tackable surface, create privacy and physical separation at various heights in a workstation.

WHAT'S INCLUDED
1 fabric screen, linking devices and mounting hardware.

WHAT'S EXCLUDED
Structural Beam or Chicago Structural Beam.

NOTES
The fabric panel is 1 1/4" thick.

Fabric for each side is specified separately.

For Width Extension for Corner Applications details, refer to the Application Guide.

PRODUCT OPTIONS

Modesty Base Height	Datum Height	Width	Width Extension for Corner Application	Inside Finish	Outside Finish	Frame Finish
10 10" from Floor	42, 51, 57	24, 30, 36, 42, 48, 54, 60, 66, 72, 78, 84	**B** Both Sides **L** One Side – Left **R** One Side – Right **S** Standard Width	Fabric	Fabric	Foundation Mica Accent

SAMPLE ORDER CODE

JNSEFB 10	51	72	B	T540	T540	74

DIMENSIONS
INCHES / MM

PRICING

		ONE SIDE – LEFT OR RIGHT (L or R) OR STANDARD WIDTH (S)							
		INSIDE/OUTSIDE FINISH							
H	W	Gr. A/COM	Gr. 1	Gr. 2	Gr. 3	Gr. 4	Gr. 5	Gr. 6	Gr. 7
42 / 1067	24 / 610	646	723	760	780	814	837	865	887
42 / 1067	30 / 762	686	777	819	847	882	914	941	967
42 / 1067	36 / 914	721	828	878	910	948	989	1023	1054
42 / 1067	42 / 1067	757	880	934	971	1018	1063	1096	1136
42 / 1067	48 / 1219	794	932	993	1035	1088	1141	1179	1220
42 / 1067	54 / 1372	882	1036	1105	1151	1209	1266	1307	1354
42 / 1067	60 / 1524	968	1139	1218	1265	1330	1391	1439	1488
42 / 1067	66 / 1676	1020	1206	1288	1343	1412	1478	1532	1588
42 / 1067	72 / 1829	1072	1271	1363	1422	1495	1567	1629	1689
42 / 1067	78 / 1981	1123	1341	1436	1499	1581	1658	1721	1785
42 / 1067	84 / 2134	1177	1408	1513	1580	1662	1749	1819	1887
51 / 1295	24 / 610	686	780	821	852	886	918	949	974
51 / 1295	30 / 762	741	854	906	943	987	1024	1060	1095
51 / 1295	36 / 914	803	937	999	1038	1088	1132	1175	1213
51 / 1295	42 / 1067	860	1013	1082	1130	1184	1237	1282	1327
51 / 1295	48 / 1219	919	1090	1171	1218	1282	1346	1393	1445
51 / 1295	54 / 1372	980	1174	1260	1314	1385	1456	1513	1572
51 / 1295	60 / 1524	1048	1257	1352	1413	1491	1570	1635	1693
51 / 1295	66 / 1676	1106	1334	1437	1504	1589	1676	1739	1806
51 / 1295	72 / 1829	1167	1413	1524	1598	1690	1784	1853	1927
51 / 1295	78 / 1981	1226	1492	1611	1688	1789	1888	1965	2042
51 / 1295	84 / 2134	1282	1570	1702	1782	1887	1993	2076	2162

Pricing is continued on the following page.

JNSEFB

Fabric Elevated Screen – Beam-Mounted (Continued)

DIMENSIONS INCHES / MM

PRICING

ONE SIDE – LEFT OR RIGHT (L or R) OR STANDARD WIDTH (S) (SUITE)

INSIDE/OUTSIDE FINISH

H	W	Gr. A/COM	Gr. 1	Gr. 2	Gr. 3	Gr. 4	Gr. 5	Gr. 6	Gr. 7
57 / 1448	24 / 610	709	815	863	898	935	975	1012	1039
57 / 1448	30 / 762	770	900	958	997	1042	1090	1131	1164
57 / 1448	36 / 914	834	986	1054	1097	1152	1207	1252	1297
57 / 1448	42 / 1067	894	1066	1148	1196	1260	1323	1369	1422
57 / 1448	48 / 1219	962	1157	1243	1301	1375	1446	1503	1561
57 / 1448	54 / 1372	1033	1250	1343	1407	1488	1566	1627	1690
57 / 1448	60 / 1524	1099	1335	1442	1512	1602	1687	1755	1826
57 / 1448	66 / 1676	1162	1420	1534	1611	1709	1802	1876	1955
57 / 1448	72 / 1829	1230	1508	1634	1715	1819	1920	2006	2083
57 / 1448	78 / 1981	1290	1592	1725	1815	1927	2038	2126	2217
57 / 1448	84 / 2134	1355	1678	1820	1916	2037	2155	2248	2343

BOTH SIDES (B)

INSIDE/OUTSIDE FINISH

		Gr. A/COM	Gr. 1	Gr. 2	Gr. 3	Gr. 4	Gr. 5	Gr. 6	Gr. 7
42 / 1067	48 / 1219	794	932	993	1035	1088	1141	1179	1220
42 / 1067	54 / 1372	882	1036	1105	1151	1209	1266	1307	1354
42 / 1067	60 / 1524	968	1139	1218	1265	1330	1391	1439	1488
42 / 1067	66 / 1676	1020	1206	1288	1343	1412	1478	1532	1588
42 / 1067	72 / 1829	1072	1271	1363	1422	1495	1567	1629	1689
42 / 1067	78 / 1981	1123	1341	1436	1499	1581	1658	1721	1785
42 / 1067	84 / 2134	1177	1408	1513	1580	1662	1749	1819	1887
51 / 1295	48 / 1219	919	1090	1171	1218	1282	1346	1393	1445
51 / 1295	54 / 1372	980	1174	1260	1314	1385	1456	1513	1572
51 / 1295	60 / 1524	1048	1257	1352	1413	1491	1570	1635	1693
51 / 1295	66 / 1676	1106	1334	1437	1504	1589	1676	1739	1806
51 / 1295	72 / 1829	1167	1413	1524	1598	1690	1784	1853	1927
51 / 1295	78 / 1981	1226	1492	1611	1688	1789	1888	1965	2042
51 / 1295	84 / 2134	1282	1570	1702	1782	1887	1993	2076	2162
57 / 1448	48 / 1219	962	1157	1243	1301	1375	1446	1503	1561
57 / 1448	54 / 1372	1033	1250	1343	1407	1488	1566	1627	1690
57 / 1448	60 / 1524	1099	1335	1442	1512	1602	1687	1755	1826
57 / 1448	66 / 1676	1162	1420	1534	1611	1709	1802	1876	1955
57 / 1448	72 / 1829	1230	1508	1634	1715	1819	1920	2006	2083
57 / 1448	78 / 1981	1290	1592	1725	1815	1927	2038	2126	2217
57 / 1448	84 / 2134	1355	1678	1820	1916	2037	2155	2248	2343

J N S E F W

Fabric Elevated Screen – Worksurface-Mounted

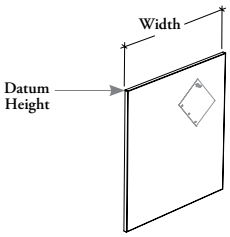

This screen mounts directly to the worksurface to add tackable surface, create privacy and physical separation between workstation and the corridor.

WHAT'S INCLUDED
1 fabric screen, linking devices and mounting hardware.

WHAT'S EXCLUDED
Worksurfaces.

NOTES
The fabric panel is 1 1/4" thick.

For Width Extension for Corner Applications details, refer to the Application Guide.

Fabric for each side is specified separately.

PRODUCT OPTIONS

Mounting Style	Modesty Base Height	Datum Height	Width	Width Extension for Corner Application	Inside Finish	Outside Finish	Frame Finish
L Support Connection on Left **R** Support Connection on Right **W** Worksurface Only	**10** 10" from Floor	42, 51, 57	24, 27, 30, 33, 36, 39, 42, 45, 48, 51, 54, 57, 60, 63, 66, 69, 72, 75, 78, 81, 84	**B** Both Sides **L** One Side – Left **R** One Side – Right **S** Standard Width	Fabric	Fabric	Foundation Mica Accent

SAMPLE ORDER CODE

JNSEFW L	10	51	84	S	T540	T540	74

DIMENSIONS
INCHES / MM

PRICING

WORKSURFACE ONLY (W)							
ONE SIDE – LEFT OR RIGHT (L or R) OR STANDARD WIDTH (S)							
INSIDE/OUTSIDE FINISH							
H	W	Gr. A/COM	Gr. 1	Gr. 2	Gr. 3	Gr. 4	Gr. 5	Gr. 6	Gr. 7
42 / 1067	24 / 610	646	723	760	780	814	837	865	887
42 / 1067	27 / 686	665	754	793	817	847	879	905	929
42 / 1067	30 / 762	686	777	819	847	882	914	941	967
42 / 1067	36 / 838	700	801	850	877	914	954	980	1015
42 / 1067	36 / 914	721	828	878	910	948	989	1023	1054
42 / 1067	39 / 991	741	859	906	943	989	1028	1062	1098
42 / 1067	42 / 1067	757	880	934	971	1018	1063	1096	1136
42 / 1067	45 / 1143	775	907	968	1005	1051	1099	1140	1181
42 / 1067	48 / 1219	794	932	993	1035	1088	1141	1179	1220
42 / 1067	51 / 1295	839	984	1052	1093	1149	1204	1246	1291
42 / 1067	54 / 1372	882	1036	1105	1151	1209	1266	1307	1354
42 / 1067	57 / 1448	925	1088	1159	1207	1268	1327	1375	1425
42 / 1067	60 / 1524	968	1139	1218	1265	1330	1391	1439	1488
42 / 1067	63 / 1600	994	1172	1257	1307	1373	1437	1493	1544
42 / 1067	66 / 1676	1020	1206	1288	1343	1412	1478	1532	1588
42 / 1067	69 / 1753	1046	1240	1324	1383	1454	1525	1582	1640
42 / 1067	72 / 1829	1072	1271	1363	1422	1495	1567	1629	1689
42 / 1067	75 / 1905	1097	1306	1405	1464	1538	1615	1680	1742
42 / 1067	78 / 1981	1123	1341	1436	1499	1581	1658	1721	1785
42 / 1067	81 / 2057	1151	1376	1474	1543	1621	1703	1769	1835
42 / 1067	84 / 2134	1177	1408	1513	1580	1662	1749	1819	1887

Pricing is continued on the following page.

JNSEFW
Fabric Elevated Screen – Worksurface-Mounted (Continued)

DIMENSIONS INCHES / MM | **PRICING**

WORKSURFACE ONLY (W) (CONTINUED)
ONE SIDE – LEFT OR RIGHT (L or R) OR STANDARD WIDTH (S)
INSIDE/OUTSIDE FINISH

H	W	Gr. A/COM	Gr. 1	Gr. 2	Gr. 3	Gr. 4	Gr. 5	Gr. 6	Gr. 7
51 / 1295	24 / 610	686	780	821	852	886	918	949	974
51 / 1295	27 / 686	714	818	866	894	934	974	1004	1035
51 / 1295	30 / 762	741	854	906	943	987	1024	1060	1095
51 / 1295	36 / 838	772	897	954	986	1035	1081	1119	1154
51 / 1295	36 / 914	803	937	999	1038	1088	1132	1175	1213
51 / 1295	39 / 991	834	975	1039	1081	1135	1188	1232	1270
51 / 1295	42 / 1067	860	1013	1082	1130	1184	1237	1282	1327
51 / 1295	45 / 1143	891	1053	1122	1173	1233	1292	1341	1389
51 / 1295	48 / 1219	919	1090	1171	1218	1282	1346	1393	1445
51 / 1295	51 / 1295	952	1131	1214	1268	1335	1403	1454	1509
51 / 1295	54 / 1372	980	1174	1260	1314	1385	1456	1513	1572
51 / 1295	57 / 1448	1016	1215	1307	1368	1440	1513	1573	1629
51 / 1295	60 / 1524	1048	1257	1352	1413	1491	1570	1635	1693
51 / 1295	63 / 1600	1078	1299	1395	1460	1544	1621	1688	1749
51 / 1295	66 / 1676	1106	1334	1437	1504	1589	1676	1739	1806
51 / 1295	69 / 1753	1134	1371	1479	1549	1641	1725	1793	1867
51 / 1295	72 / 1829	1167	1413	1524	1598	1690	1784	1853	1927
51 / 1295	75 / 1905	1197	1455	1569	1645	1740	1833	1908	1987
51 / 1295	78 / 1981	1226	1492	1611	1688	1789	1888	1965	2042
51 / 1295	81 / 2057	1254	1530	1652	1735	1839	1938	2023	2102
51 / 1295	84 / 2134	1282	1570	1702	1782	1887	1993	2076	2162
57 / 1448	24 / 610	709	815	863	898	935	975	1012	1039
57 / 1448	27 / 686	739	859	909	946	991	1033	1065	1106
57 / 1448	30 / 762	770	900	958	997	1042	1090	1131	1164
57 / 1448	36 / 838	803	943	1006	1046	1099	1152	1192	1234
57 / 1448	36 / 914	834	986	1054	1097	1152	1207	1252	1297
57 / 1448	39 / 991	868	1030	1098	1148	1207	1265	1317	1364
57 / 1448	42 / 1067	894	1066	1148	1196	1260	1323	1369	1422
57 / 1448	45 / 1143	928	1110	1195	1248	1315	1382	1437	1492
57 / 1448	48 / 1219	962	1157	1243	1301	1375	1446	1503	1561
57 / 1448	51 / 1295	995	1198	1293	1352	1426	1499	1562	1623
57 / 1448	54 / 1372	1033	1250	1343	1407	1488	1566	1627	1690
57 / 1448	57 / 1448	1065	1292	1394	1460	1543	1626	1695	1760
57 / 1448	60 / 1524	1099	1335	1442	1512	1602	1687	1755	1826
57 / 1448	63 / 1600	1132	1379	1492	1567	1655	1747	1822	1892
57 / 1448	66 / 1676	1162	1420	1534	1611	1709	1802	1876	1955
57 / 1448	69 / 1753	1197	1464	1583	1664	1763	1862	1941	2025
57 / 1448	72 / 1829	1230	1508	1634	1715	1819	1920	2006	2083
57 / 1448	75 / 1905	1259	1549	1678	1761	1872	1981	2063	2150
57 / 1448	78 / 1981	1290	1592	1725	1815	1927	2038	2126	2217
57 / 1448	81 / 2057	1321	1633	1777	1867	1981	2096	2192	2283
57 / 1448	84 / 2134	1355	1678	1820	1916	2037	2155	2248	2343

Pricing is continued on the following page.

J N S E F W

Fabric Elevated Screen – Worksurface-Mounted (Continued)

DIMENSIONS INCHES / MM | **PRICING**

WORKSURFACE ONLY (W) (CONTINUED)

BOTH SIDES (B)

INSIDE/OUTSIDE FINISH

H	W	Gr. A/COM	Gr. 1	Gr. 2	Gr. 3	Gr.4	Gr. 5	Gr. 6	Gr. 7
42 / 1067	48 / 1219	684	932	993	1035	1088	1141	1179	1220
42 / 1067	54 / 1372	762	1036	1105	1151	1209	1266	1307	1354
42 / 1067	60 / 1524	836	1139	1218	1265	1330	1391	1439	1488
42 / 1067	66 / 1676	878	1206	1288	1343	1412	1478	1532	1588
42 / 1067	72 / 1829	915	1271	1363	1422	1495	1567	1629	1689
42 / 1067	78 / 1981	956	1341	1436	1499	1581	1658	1721	1785
42 / 1067	84 / 2134	996	1408	1513	1580	1662	1749	1819	1887
51 / 1295	48 / 1219	786	1090	1171	1218	1282	1346	1393	1445
51 / 1295	54 / 1372	834	1174	1260	1314	1385	1456	1513	1572
51 / 1295	60 / 1524	885	1257	1352	1413	1491	1570	1635	1693
51 / 1295	66 / 1676	929	1334	1437	1504	1589	1676	1739	1806
51 / 1295	72 / 1829	974	1413	1524	1598	1690	1784	1853	1927
51 / 1295	78 / 1981	1017	1492	1611	1688	1789	1888	1965	2042
51 / 1295	84 / 2134	1061	1570	1702	1782	1887	1993	2076	2162
57 / 1448	48 / 1219	812	1157	1243	1301	1375	1446	1503	1561
57 / 1448	54 / 1372	863	1250	1343	1407	1488	1566	1627	1690
57 / 1448	60 / 1524	915	1335	1442	1512	1602	1687	1755	1826
57 / 1448	66 / 1676	962	1420	1534	1611	1709	1802	1876	1955
57 / 1448	72 / 1829	1010	1508	1634	1715	1819	1920	2006	2083
57 / 1448	78 / 1981	1058	1592	1725	1815	1927	2038	2126	2217
57 / 1448	84 / 2134	1105	1678	1820	1916	2037	2155	2248	2343

SUPPORT CONNECTION ON LEFT OR RIGHT (L or R)

ONE SIDE – LEFT OR RIGHT (L or R) OR STANDARD WIDTH (S)

INSIDE/OUTSIDE FINISH

		Gr. A/COM	Gr. 1	Gr. 2	Gr. 3	Gr.4	Gr. 5	Gr. 6	Gr. 7
42 / 1067	42 / 1067	660	880	934	971	1018	1063	1096	1136
42 / 1067	48 / 1219	684	932	993	1035	1088	1141	1179	1220
42 / 1067	54 / 1372	762	1036	1105	1151	1209	1266	1307	1354
42 / 1067	60 / 1524	836	1139	1218	1265	1330	1391	1439	1488
42 / 1067	66 / 1676	878	1206	1288	1343	1412	1478	1532	1588
42 / 1067	72 / 1829	915	1271	1363	1422	1495	1567	1629	1689
42 / 1067	78 / 1981	956	1341	1436	1499	1581	1658	1721	1785
42 / 1067	84 / 2134	996	1408	1513	1580	1662	1749	1819	1887
51 / 1295	42 / 1067	740	1013	1082	1130	1184	1237	1282	1327
51 / 1295	48 / 1219	786	1090	1171	1218	1282	1346	1393	1445
51 / 1295	54 / 1372	834	1174	1260	1314	1385	1456	1513	1572
51 / 1295	60 / 1524	885	1257	1352	1413	1491	1570	1635	1693
51 / 1295	66 / 1676	929	1334	1437	1504	1589	1676	1739	1806
51 / 1295	72 / 1829	974	1413	1524	1598	1690	1784	1853	1927
51 / 1295	78 / 1981	1017	1492	1611	1688	1789	1888	1965	2042
51 / 1295	84 / 2134	1061	1570	1702	1782	1887	1993	2076	2162

Pricing is continued on the following page.

JNSEFW

Fabric Elevated Screen – Worksurface-Mounted (Continued)

DIMENSIONS INCHES / MM | **PRICING**

SUPPORT CONNECTION ON LEFT OR RIGHT (L or R) (CONTINUED)

ONE SIDE – LEFT OR RIGHT (L or R) OR STANDARD WIDTH (S)

INSIDE/OUTSIDE FINISH

H	W	Gr. A/COM	Gr. 1	Gr. 2	Gr. 3	Gr.4	Gr. 5	Gr. 6	Gr. 7
57 / 1448	42 / 1067	763	1066	1148	1196	1260	1323	1369	1422
57 / 1448	48 / 1219	812	1157	1243	1301	1375	1446	1503	1561
57 / 1448	54 / 1372	863	1250	1343	1407	1488	1566	1627	1690
57 / 1448	60 / 1524	915	1335	1442	1512	1602	1687	1755	1826
57 / 1448	66 / 1676	962	1420	1534	1611	1709	1802	1876	1955
57 / 1448	72 / 1829	1010	1508	1634	1715	1819	1920	2006	2083
57 / 1448	78 / 1981	1058	1592	1725	1815	1927	2038	2126	2217
57 / 1448	84 / 2134	1105	1678	1820	1916	2037	2155	2248	2343

SUPPORT CONNECTION ON LEFT OR RIGHT (L or R)

BOTH SIDES (B)

INSIDE/OUTSIDE FINISH

		Gr. A/COM	Gr. 1	Gr. 2	Gr. 3	Gr.4	Gr. 5	Gr. 6	Gr. 7
42 / 1067	48 / 1219	684	932	993	1035	1088	1141	1179	1220
42 / 1067	54 / 1372	762	1036	1105	1151	1209	1266	1307	1354
42 / 1067	60 / 1524	836	1139	1218	1265	1330	1391	1439	1488
42 / 1067	66 / 1676	878	1206	1288	1343	1412	1478	1532	1588
42 / 1067	72 / 1829	915	1271	1363	1422	1495	1567	1629	1689
42 / 1067	78 / 1981	956	1341	1436	1499	1581	1658	1721	1785
42 / 1067	84 / 2134	996	1408	1513	1580	1662	1749	1819	1887
51 / 1295	48 / 1219	786	1090	1171	1218	1282	1346	1393	1445
51 / 1295	54 / 1372	834	1174	1260	1314	1385	1456	1513	1572
51 / 1295	60 / 1524	885	1257	1352	1413	1491	1570	1635	1693
51 / 1295	66 / 1676	929	1334	1437	1504	1589	1676	1739	1806
51 / 1295	72 / 1829	974	1413	1524	1598	1690	1784	1853	1927
51 / 1295	78 / 1981	1017	1492	1611	1688	1789	1888	1965	2042
51 / 1295	84 / 2134	1061	1570	1702	1782	1887	1993	2076	2162
57 / 1448	48 / 1219	812	1157	1243	1301	1375	1446	1503	1561
57 / 1448	54 / 1372	863	1250	1343	1407	1488	1566	1627	1690
57 / 1448	60 / 1524	915	1335	1442	1512	1602	1687	1755	1826
57 / 1448	66 / 1676	962	1420	1534	1611	1709	1802	1876	1955
57 / 1448	72 / 1829	1010	1508	1634	1715	1819	1920	2006	2083
57 / 1448	78 / 1981	1058	1592	1725	1815	1927	2038	2126	2217
57 / 1448	84 / 2134	1105	1678	1820	1916	2037	2155	2248	2343

JNSEEB

Felt Elevated Screen – Beam-Mounted

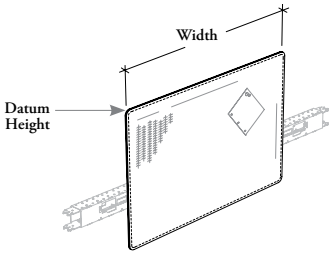

This screen mounts directly on front of a structural beam to add acoustic and tackable surface, create privacy and physical separation.

WHAT'S INCLUDED
1 felt screen and mounting hardware.

WHAT'S EXCLUDED
Structural Beam or Chicago Structural Beam.

PRODUCT OPTIONS

Modesty Base Height	Datum Height	Width	Width Extension for Corner Application	Corner Detail	Felt Finish	Stitches Finish	Hardware Finish
10 10" from Floor	42, 51, 57	24, 30, 36, 42, 48, 54, 60, 66, 72, 78, 84	**S** Standard Width	**R** Radius	Loft	**C** Carbon Coordinate **E** Shale Coordinate **G** Carrara Coordinate **M** Umber Coordinate	**52** Ebony

SAMPLE ORDER CODE

JNSEEB 10	51	24	S	R	RB11	C	52

DIMENSIONS INCHES / MM		PRICING
H	W	
42 / 1067	24 / 610	443
42 / 1067	30 / 762	552
42 / 1067	36 / 914	639
42 / 1067	42 / 1067	724
42 / 1067	48 / 1219	807
42 / 1067	54 / 1372	919
42 / 1067	60 / 1524	1006
42 / 1067	66 / 1676	1090
42 / 1067	72 / 1829	1176
42 / 1067	78 / 1981	1261
42 / 1067	84 / 2134	1346
51 / 1295	24 / 610	563
51 / 1295	30 / 762	673
51 / 1295	36 / 914	780
51 / 1295	42 / 1067	889
51 / 1295	48 / 1219	999
51 / 1295	54 / 1372	1137
51 / 1295	60 / 1524	1244
51 / 1295	66 / 1676	1354
51 / 1295	72 / 1829	1463
51 / 1295	78 / 1981	1571
51 / 1295	84 / 2134	1682

DIMENSIONS INCHES / MM		PRICING
H	W	
57 / 1448	24 / 610	625
57 / 1448	30 / 762	752
57 / 1448	36 / 914	877
57 / 1448	42 / 1067	1001
57 / 1448	48 / 1219	1126
57 / 1448	54 / 1372	1278
57 / 1448	60 / 1524	1404
57 / 1448	66 / 1676	1529
57 / 1448	72 / 1829	1654
57 / 1448	78 / 1981	1777
57 / 1448	84 / 2134	1902

J N S E E W

Felt Elevated Screen – Worksurface-Mounted

This screen mounts directly to the worksurface to add acoustic and tackable surface, create privacy and physical separation between workstation and the corridor.

WHAT'S INCLUDED
1 felt screen and mounting hardware.

WHAT'S EXCLUDED
Worksurfaces.

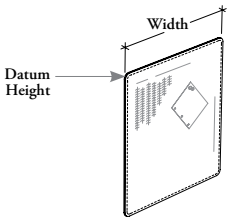

PRODUCT OPTIONS

Mounting Style	Modesty Base Height	Datum Height	Width	Width Extension for Corner Application	Corner Detail	Felt Finish	Stitches Finish	Hardware Finish
L Support Connection on Left **R** Support Connection on Right **W** Worksurface Only	**10** 10" from Floor	42, 51, 57	24, 27, 30, 33, 36, 39, 42, 45, 48, 51, 54, 60, 63, 66, 69, 72, 75, 78, 81, 84	**S** Standard Width	**R** Radius	Loft	**C** Carbon Coordinate **E** Shale Coordinate **G** Carrara Coordinate **M** Umber Coordinate	**52** Ebony

SAMPLE ORDER CODE

JNSEEW L	10	51	42	S	R	RB11	C	52

DIMENSIONS INCHES / MM

H	W
42 / 1067	24 / 610
42 / 1067	27 / 686
42 / 1067	30 / 762
42 / 1067	36 / 838
42 / 1067	36 / 914
42 / 1067	39 / 991
42 / 1067	42 / 1067
42 / 1067	45 / 1143
42 / 1067	48 / 1219
42 / 1067	51 / 1295
42 / 1067	54 / 1372
42 / 1067	57 / 1448
42 / 1067	60 / 1524
42 / 1067	63 / 1600
42 / 1067	66 / 1676
42 / 1067	69 / 1753
42 / 1067	72 / 1829
42 / 1067	75 / 1905
42 / 1067	78 / 1981
42 / 1067	81 / 2057
42 / 1067	84 / 2134

PRICING

WORKSURFACE ONLY (W)	SUPPORT CONN. ON LEFT OR RIGHT (L or R)
443	n/a
498	n/a
552	n/a
594	n/a
639	n/a
680	n/a
724	724
764	n/a
807	807
863	n/a
919	919
962	n/a
1006	1006
1050	n/a
1090	1090
1133	n/a
1176	1176
1218	n/a
1261	1261
1304	n/a
1346	1346

DIMENSIONS INCHES / MM

H	W
51 / 1295	24 / 610
51 / 1295	27 / 686
51 / 1295	30 / 762
51 / 1295	36 / 838
51 / 1295	36 / 914
51 / 1295	39 / 991
51 / 1295	42 / 1067
51 / 1295	45 / 1143
51 / 1295	48 / 1219
51 / 1295	51 / 1295
51 / 1295	54 / 1372
51 / 1295	57 / 1448
51 / 1295	60 / 1524
51 / 1295	63 / 1600
51 / 1295	66 / 1676
51 / 1295	69 / 1753
51 / 1295	72 / 1829
51 / 1295	75 / 1905
51 / 1295	78 / 1981
51 / 1295	81 / 2057
51 / 1295	84 / 2134

PRICING

WORKSURFACE ONLY (W)	SUPPORT CONN. ON LEFT OR RIGHT (L or R)
563	n/a
617	n/a
673	n/a
728	n/a
780	n/a
834	n/a
889	889
943	n/a
999	999
1066	n/a
1137	1137
1189	n/a
1244	1244
1298	n/a
1354	1354
1408	n/a
1463	1463
1516	n/a
1571	1571
1626	n/a
1682	1682

Pricing is continued on the following page.

JNSEEW

Felt Elevated Screen – Worksurface-Mounted (Continued)

DIMENSIONS INCHES / MM		PRICING	
H	W	WORKSURFACE ONLY (W)	SUPPORT CONNECTION ON LEFT OR RIGHT (L or R)
57 / 1448	24 / 610	625	n/a
57 / 1448	27 / 686	689	n/a
57 / 1448	30 / 762	752	n/a
57 / 1448	36 / 838	814	n/a
57 / 1448	36 / 914	877	n/a
57 / 1448	39 / 991	940	n/a
57 / 1448	42 / 1067	1001	1001
57 / 1448	45 / 1143	1063	n/a
57 / 1448	48 / 1219	1126	1126
57 / 1448	51 / 1295	1203	n/a
57 / 1448	54 / 1372	1278	1278
57 / 1448	57 / 1448	1342	n/a
57 / 1448	60 / 1524	1404	1404
57 / 1448	63 / 1600	1467	n/a
57 / 1448	66 / 1676	1529	1529
57 / 1448	69 / 1753	1592	n/a
57 / 1448	72 / 1829	1654	1654
57 / 1448	75 / 1905	1717	n/a
57 / 1448	78 / 1981	1777	1777
57 / 1448	81 / 2057	1842	n/a
57 / 1448	84 / 2134	1902	1902

J N S E C F
Felt Corner Elevated Screen

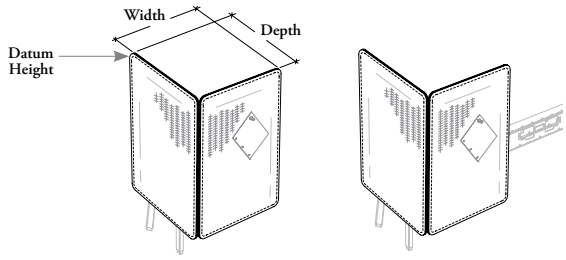

Worksurface-Mounted (W)

Beam-Mounted (B)

This screen mounts directly to leg and strucrural beam or worksurfaces to add acoustic and tackable surface, create privacy and physical separation between workstation and the corridor.

WHAT'S INCLUDED
2 felt screens linked by a zipper and mounting hardware.

WHAT'S EXCLUDED
Worksurfaces, Structural Legs and Structural Beam or Chicago Structural Beam.

NOTES
Width and depth must be specified equal.

PRODUCT OPTIONS

Mounting Style	Modesty Base Height	Datum Height	Width	Depth	Width Extension for Corner Application
B Beam-Mounted **W** Worksurface-Mounted	**10** 10" from Floor	42, 51, 57	18, 24, 30, 36	18, 24, 30, 36	**S** Standard Width

SAMPLE ORDER CODE

JNSECF B	10	51	24	24	S

PRODUCT OPTIONS CONTINUED

Corner Detail	Orientation	Felt Finish	Stitches Finish	Zipper Finish
R Radius	**L** Leg on Left **R** Leg on Right (Shown)	Loft	**C** Carbon Coordinate **E** Shale Coordinate **G** Carrara Coordinate **M** Umber Coordinate	**F** Felt Coordinate

SAMPLE ORDER CODE CONTINUED

R	R	RB11	C	F

See Pricing on the following page.

JNSECF
Felt Corner Elevated Screen (Continued)

DIMENSIONS INCHES / MM			PRICING
H	W	D	
42 / 1067	18 / 457	18 / 457	672
42 / 1067	24 / 610	24 / 610	832
42 / 1067	30 / 762	30 / 762	995
42 / 1067	36 / 914	36 / 914	1157
51 / 1295	18 / 457	18 / 457	807
51 / 1295	24 / 610	24 / 610	1015
51 / 1295	30 / 762	30 / 762	1221
51 / 1295	36 / 914	36 / 914	1429
57 / 1448	18 / 457	18 / 457	900
57 / 1448	24 / 610	24 / 610	1137
57 / 1448	30 / 762	30 / 762	1373
57 / 1448	36 / 914	36 / 914	1610

JNSELE
Felt End Screen Worksurface-Mounted

This screen mounts at the end of a worksurface providing acoustic and tackable surface (outside) shelf and magnetic surface (inside) creating privacy and physical separation between the workstation and corridor.

WHAT'S INCLUDED
Metal and felt screen and mounting hardware.

WHAT'S EXCLUDED
Standard Corner Worksurfaces.

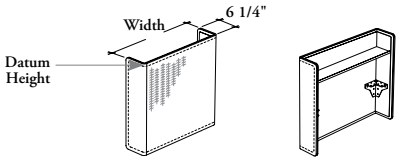

PRODUCT OPTIONS

Mounting Style	Modesty Base Height	Datum Height	Width	Corner Detail	Felt Finish	Stitches Finish	Inside Finish
L Angled Leg on Left **R** Angled Leg on Right	**18** 18" from Floor	42	24, 30	**R** Radius	Loft	**C** Carbon Coordinate **E** Shale Coordinate **G** Carrara Coordinate **M** Umber Coordinate	Foundation Accent Mica

SAMPLE ORDER CODE

JNSELE L	18	42	24	R	RB11	C	F

DIMENSIONS
INCHES / MM

H	W	PRICING
42 / 1067	24 / 610	1145
42 / 1067	30 / 762	1186

J N S F S B

Floor Screen – Beam-Mounted

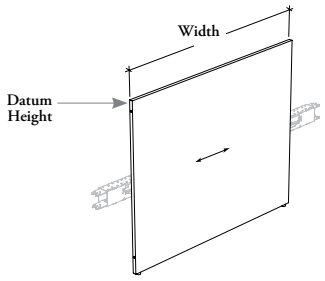

This screen attaches to the front of a structural beam only to provide space division.

WHAT'S INCLUDED
1 solid screen, linking devices and caps (as specified), levelers and mounting hardware.

WHAT'S EXCLUDED
Structural Beam, Chicago Structural Beam, Sit and Slide Screens.

NOTES
The solid panel is 1" thick.

For Width Extension for Corner Applications details, refer to the Application Guide.

PRODUCT OPTIONS

Datum Height	Width	Width Extension for Corner Application	Corner Detail	Alignment Holes	Cable Pass-Through	Screen Finish
42, 51, 57	24, 30, 36, 42, 48, 54, 60, 66, 72, 78, 84	**B** Both Sides **L** One Side – Left **R** One Side – Right **S** Standard Width	**S** Standard	**N** Without Alignment Holes **W** With Aligment Holes (Shown)	**N** No Pass-Through	Source Laminate

SAMPLE ORDER CODE

JNSFSB 42	66	B	S	W	N	XS

DIMENSIONS INCHES / MM

H	W
42 / 1067	24 / 610
42 / 1067	30 / 762
42 / 1067	36 / 914
42 / 1067	42 / 1067
42 / 1067	48 / 1219
42 / 1067	54 / 1372
42 / 1067	60 / 1524
42 / 1067	66 / 1676
42 / 1067	72 / 1829
42 / 1067	78 / 1981
42 / 1067	84 / 2134

PRICING

BOTH SIDES (B)	ONE SIDE – LEFT OR RIGHT (L or R) OR STANDARD WIDTH (S)
n/a	318
n/a	353
n/a	387
n/a	426
463	463
500	500
582	582
615	615
653	653
689	689
730	730

Pricing is continued on the following page.

JNSFSB
Floor Screen – Beam-Mounted (Continued)

DIMENSIONS INCHES / MM		PRICING	
H	W	BOTH SIDES (B)	ONE SIDE – LEFT OR RIGHT (L or R) OR STANDARD WIDTH (S)
51 / 1295	24 / 610	n/a	351
51 / 1295	30 / 762	n/a	396
51 / 1295	36 / 914	n/a	437
51 / 1295	42 / 1067	n/a	480
51 / 1295	48 / 1219	527	527
51 / 1295	54 / 1372	571	571
51 / 1295	60 / 1524	654	654
51 / 1295	66 / 1676	701	701
51 / 1295	72 / 1829	746	746
51 / 1295	78 / 1981	788	788
51 / 1295	84 / 2134	829	829
57 / 1448	24 / 610	n/a	375
57 / 1448	30 / 762	n/a	422
57 / 1448	36 / 914	n/a	469
57 / 1448	42 / 1067	n/a	521
57 / 1448	48 / 1219	568	568
57 / 1448	54 / 1372	617	617
57 / 1448	60 / 1524	704	704
57 / 1448	66 / 1676	757	757
57 / 1448	72 / 1829	807	807
57 / 1448	78 / 1981	854	854
57 / 1448	84 / 2134	900	900

J N S F S W

Floor Screen – Worksurface-Mounted

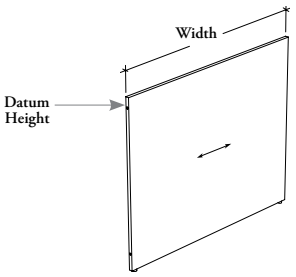

This screen attaches to the back of a worksurface to provide space division.

WHAT'S INCLUDED
1 solid screen, 1 cable pass-through ring (as specified), linking devices and caps (as specified), levelers and mounting hardware.

WHAT'S EXCLUDED
Worksurfaces, Cable Pass-Through Cover (if specified), Sit and Slide Screens.

NOTES
The solid panel is 1" thick.

For Width Extension for Corner Applications details, refer to the Application Guide.

Pass-Through ring comes in a Platinum Coordinate.

When Worksurface Only (W) option is specified, the Standard-Height Pass-Through (S) option is **not** available.

When Worksurface Only (W) option is specified, only the Not Applicable Hardware Finish (NA) option is available.

Not Applicable Hardware Finish (NA) option is **not** available with Mounting Styles Support Connection on Left or Right (L or R).

PRODUCT OPTIONS

Mounting Style	Datum Height	Width	Width Extension for Corner Application	Corner Detail	Alignment Holes	Cable Pass-Through	Screen Finish	Hardware Finish
L Support Connection on Left	42, 51, 57	24, 30, 36, 42, 48, 54, 60, 66, 72, 78, 84	**B** Both Sides	**S** Standard	**N** Without Alignment Holes	**N** No Pass-Through (Shown)	Source Laminate	Foundation
R Support Connection on Right			**L** One Side – Left		**W** With Aligment Holes (Shown)	**S** Standard-Height Pass-Through		Mica
W Worksurface Only			**R** One Side – Right					Accent
			S Standard Width					Coordinate Colors
								NA Not Applicable

SAMPLE ORDER CODE

JNSFSW L	51	72	S	S	N	N	XS	NA

DIMENSIONS
INCHES / MM

H	W
42 / 1067	48 / 1219
42 / 1067	54 / 1372
42 / 1067	60 / 1524
42 / 1067	66 / 1676
42 / 1067	72 / 1829
42 / 1067	78 / 1981
42 / 1067	84 / 2134

PRICING

WORKSURFACE ONLY (W)	SUPPORT CONNECTION ON LEFT OR RIGHT (L or R)
BOTH SIDES (B)	
463	463
500	500
582	582
615	615
653	653
689	689
730	730

Pricing is continued on the following page.

JNSFSW
Floor Screen – Worksurface-Mounted (Continued)

DIMENSIONS INCHES / MM		PRICING	
		WORKSURFACE ONLY (W)	SUPPORT CONNECTION ON LEFT OR RIGHT (L or R)
H	W	BOTH SIDES (B)	
51 / 1295	48 / 1219	527	527
51 / 1295	54 / 1372	571	571
51 / 1295	60 / 1524	654	654
51 / 1295	66 / 1676	701	701
51 / 1295	72 / 1829	746	746
51 / 1295	78 / 1981	788	788
51 / 1295	84 / 2134	829	829
57 / 1448	48 / 1219	568	568
57 / 1448	54 / 1372	617	617
57 / 1448	60 / 1524	704	704
57 / 1448	66 / 1676	757	757
57 / 1448	72 / 1829	807	807
57 / 1448	78 / 1981	854	854
57 / 1448	84 / 2134	900	900
		ONE SIDE – LEFT OR RIGHT (L or R) OR STANDARD WIDTH (S)	
42 / 1067	24 / 610	318	n/a
42 / 1067	30 / 762	353	n/a
42 / 1067	36 / 914	387	n/a
42 / 1067	42 / 1067	426	426
42 / 1067	48 / 1219	463	463
42 / 1067	54 / 1372	500	500
42 / 1067	60 / 1524	582	582
42 / 1067	66 / 1676	615	615
42 / 1067	72 / 1829	653	653
42 / 1067	78 / 1981	689	689
42 / 1067	84 / 2134	730	730
51 / 1295	24 / 610	351	n/a
51 / 1295	30 / 762	396	n/a
51 / 1295	36 / 914	437	n/a
51 / 1295	42 / 1067	480	480
51 / 1295	48 / 1219	527	527
51 / 1295	54 / 1372	571	571
51 / 1295	60 / 1524	654	654
51 / 1295	66 / 1676	701	701
51 / 1295	72 / 1829	746	746
51 / 1295	78 / 1981	788	788
51 / 1295	84 / 2134	829	829
57 / 1448	24 / 610	375	n/a
57 / 1448	30 / 762	422	n/a
57 / 1448	36 / 914	469	n/a
57 / 1448	42 / 1067	521	521
57 / 1448	48 / 1219	568	568
57 / 1448	54 / 1372	617	617
57 / 1448	60 / 1524	704	704
57 / 1448	66 / 1676	757	757
57 / 1448	72 / 1829	807	807
57 / 1448	78 / 1981	854	854
57 / 1448	84 / 2134	900	900

J N S F G B

Floor Screen with Glass – Beam-Mounted

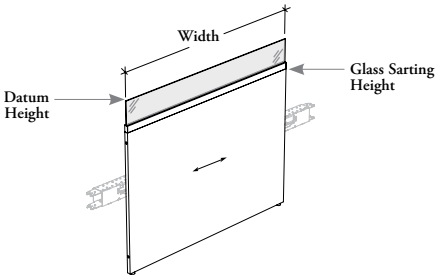

This screen attaches to the front of a structural beam to provide space division.

WHAT'S INCLUDED
1 solid screen with glass, linking devices and caps (as specified), levelers and mounting hardware.

WHAT'S EXCLUDED
Structural Beam, Chicago Structural Beam and Linking Strip for Glass Screen.

NOTES
The solid panel is 1" thick and tempered glass is 1/4" (6 mm) thick.

Frost Finishes (FT or LB) are single-sided etched, Satin (FB) is etched on both sides.

For Width Extension for Corner Applications details, refer to the Application Guide.

PRODUCT OPTIONS

Datum Height	Glass Starting Height	Width	Width Extension for Corner Application	Alignment Holes	Cable Pass-Through	Screen Finish	Frame Finish	Glass Finish
42, 51, 57	29, 42	24, 30, 36, 42, 48, 54, 60, 66, 72, 78, 84	**B** Both Sides **L** One Side – Left **R** One Side – Right **S** Standard Width	**N** Without Alignment Holes **W** With Aligment Holes (Shown)	**N** No Pass-Through	Source Laminate	Foundation Mica Accent	**Standard Glass:** **CL** Clear **FT** Frost **FB** Satin **Low Iron Glass:** **LA** Clear – Low Iron **LB** Frost – Low Iron

SAMPLE ORDER CODE

JNSFGB 51	29	24	S	N	N	XS	74	FT

DIMENSIONS
INCHES / MM

PRICING

29" GLASS STARTING HEIGHT
BOTH SIDES (B)
SOURCE LAMINATE SCREEN FINISH

H	W	Clear (CL)	Frost (FT)	Satin (FB)	Clear – Low Iron (LA)	Frost – Low Iron (LB)
42 / 1067	24 / 610	n/a	n/a	n/a	n/a	n/a
42 / 1067	30 / 762	n/a	n/a	n/a	n/a	n/a
42 / 1067	36 / 914	n/a	n/a	n/a	n/a	n/a
42 / 1067	42 / 1067	n/a	n/a	n/a	n/a	n/a
42 / 1067	48 / 1219	762	798	923	826	855
42 / 1067	54 / 1372	822	864	1003	892	930
42 / 1067	60 / 1524	916	965	1119	996	1034
42 / 1067	66 / 1676	991	1043	1215	1077	1119
42 / 1067	72 / 1829	1061	1117	1303	1154	1203
42 / 1067	78 / 1981	1136	1197	1399	1236	1288
42 / 1067	84 / 2134	1208	1274	1493	1318	1373
51 / 1295	24 / 610	n/a	n/a	n/a	n/a	n/a
51 / 1295	30 / 762	n/a	n/a	n/a	n/a	n/a
51 / 1295	36 / 914	n/a	n/a	n/a	n/a	n/a
51 / 1295	42 / 1067	n/a	n/a	n/a	n/a	n/a
51 / 1295	48 / 1219	890	954	1164	998	1047
51 / 1295	54 / 1372	964	1035	1273	1083	1141
51 / 1295	60 / 1524	1070	1150	1415	1201	1270
51 / 1295	66 / 1676	1173	1260	1551	1319	1390
51 / 1295	72 / 1829	1269	1363	1680	1426	1506
51 / 1295	78 / 1981	1369	1475	1814	1542	1627
51 / 1295	84 / 2134	1470	1581	1949	1654	1746

Pricing is continued on the following page.

J N S F G B

Floor Screen with Glass – Beam-Mounted (Continued)

DIMENSIONS INCHES / MM | **PRICING**

29" GLASS STARTING HEIGHT (CONTINUED)

ONE-SIDE – LEFT OR RIGHT (L or R) OR STANDARD WIDTH (S)

SOURCE LAMINATE SCREEN FINISH

H	W	Clear (CL)	Frost (FT)	Satin (FB)	Clear – Low Iron (LA)	Frost – Low Iron (LB)
42 / 1067	24 / 610	524	544	606	555	573
42 / 1067	30 / 762	583	609	683	622	641
42 / 1067	36 / 914	645	674	767	694	715
42 / 1067	42 / 1067	703	735	846	758	785
42 / 1067	48 / 1219	762	798	923	826	855
42 / 1067	54 / 1372	822	864	1003	892	930
42 / 1067	60 / 1524	916	965	1119	996	1034
42 / 1067	66 / 1676	991	1043	1215	1077	1119
42 / 1067	72 / 1829	1061	1117	1303	1154	1203
42 / 1067	78 / 1981	1136	1197	1399	1236	1288
42 / 1067	84 / 2134	1208	1274	1493	1318	1373
51 / 1295	24 / 610	604	635	742	657	684
51 / 1295	30 / 762	676	715	849	742	773
51 / 1295	36 / 914	747	796	952	827	866
51 / 1295	42 / 1067	821	877	1061	914	961
51 / 1295	48 / 1219	890	954	1164	998	1047
51 / 1295	54 / 1372	964	1035	1273	1083	1141
51 / 1295	60 / 1524	1070	1150	1415	1201	1270
51 / 1295	66 / 1676	1173	1260	1551	1319	1390
51 / 1295	72 / 1829	1269	1363	1680	1426	1506
51 / 1295	78 / 1981	1369	1475	1814	1542	1627
51 / 1295	84 / 2134	1470	1581	1949	1654	1746

42" GLASS STARTING HEIGHT

BOTH SIDES (B)

SOURCE LAMINATE SCREEN FINISH

		Clear (CL)	Frost (FT)	Satin (FB)	Clear – Low Iron (LA)	Frost – Low Iron (LB)
51 / 1295	24 / 610	n/a	n/a	n/a	n/a	n/a
51 / 1295	30 / 762	n/a	n/a	n/a	n/a	n/a
51 / 1295	36 / 914	n/a	n/a	n/a	n/a	n/a
51 / 1295	42 / 1067	n/a	n/a	n/a	n/a	n/a
51 / 1295	48 / 1219	783	810	896	825	848
51 / 1295	54 / 1372	848	878	973	898	923
51 / 1295	60 / 1524	944	976	1086	999	1026
51 / 1295	66 / 1676	1015	1050	1169	1074	1104
51 / 1295	72 / 1829	1083	1121	1252	1148	1179
51 / 1295	78 / 1981	1152	1194	1333	1222	1260
51 / 1295	84 / 2134	1225	1273	1423	1303	1340
57 / 1448	24 / 610	n/a	n/a	n/a	n/a	n/a
57 / 1448	30 / 762	n/a	n/a	n/a	n/a	n/a
57 / 1448	36 / 914	n/a	n/a	n/a	n/a	n/a
57 / 1448	42 / 1067	n/a	n/a	n/a	n/a	n/a
57 / 1448	48 / 1219	1014	1056	1200	1085	1123
57 / 1448	54 / 1372	1102	1152	1312	1184	1224
57 / 1448	60 / 1524	1219	1274	1453	1309	1355
57 / 1448	66 / 1676	1344	1403	1602	1441	1494
57 / 1448	72 / 1829	1465	1530	1746	1574	1626
57 / 1448	78 / 1981	1589	1659	1892	1707	1764
57 / 1448	84 / 2134	1712	1790	2039	1837	1902

Pricing is continued on the following page.

J N S F G B

Floor Screen with Glass – Beam-Mounted (Continued)

DIMENSIONS
INCHES / MM

PRICING

		42" GLASS STARTING HEIGHT (CONTINUED)				
		ON-SIDE – LEFT OR RIGHT (L or R) OR STANDARD WIDTH (S)				
		SOURCE LAMINATE SCREEN FINISH				
H	W	Clear (CL)	Frost (FT)	Satin (FB)	Clear – Low Iron (LA)	Frost – Low Iron (LB)
51 / 1295	24 / 610	531	541	587	554	563
51 / 1295	30 / 762	594	613	664	622	635
51 / 1295	36 / 914	658	679	743	690	708
51 / 1295	42 / 1067	720	744	817	758	777
51 / 1295	48 / 1219	783	810	896	825	848
51 / 1295	54 / 1372	848	878	973	898	923
51 / 1295	60 / 1524	944	976	1086	999	1026
51 / 1295	66 / 1676	1015	1050	1169	1074	1104
51 / 1295	72 / 1829	1083	1121	1252	1148	1179
51 / 1295	78 / 1981	1152	1194	1333	1222	1260
51 / 1295	84 / 2134	1225	1273	1423	1303	1340
57 / 1448	24 / 610	676	699	769	711	731
57 / 1448	30 / 762	763	791	881	811	830
57 / 1448	36 / 914	848	880	990	903	930
57 / 1448	42 / 1067	933	971	1098	997	1027
57 / 1448	48 / 1219	1014	1056	1200	1085	1123
57 / 1448	54 / 1372	1102	1152	1312	1184	1224
57 / 1448	60 / 1524	1219	1274	1453	1309	1355
57 / 1448	66 / 1676	1344	1403	1602	1441	1494
57 / 1448	72 / 1829	1465	1530	1746	1574	1626
57 / 1448	78 / 1981	1589	1659	1892	1707	1764
57 / 1448	84 / 2134	1712	1790	2039	1837	1902

J N S F G W

Floor Screen with Glass – Worksurface-Mounted

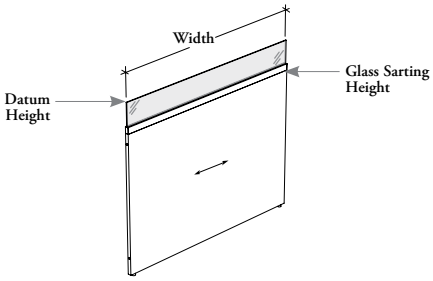

This screen attaches to back or side of a worksurface to provide space division.

WHAT'S INCLUDED
1 solid screen with glass, 1 cable pass-through ring (as specified), linking devices and caps (as specified), levelers and mounting hardware.

WHAT'S EXCLUDED
Worksurfaces, Cable Pass-Through Cover and Linking Strip for Glass Screen.

NOTES
The solid panel is 1" thick and tempered glass is 1/4" (6 mm) thick.

Frost Finishes (FT or LB) are single-sided etched, Satin (FB) is etched on both sides.

For Width Extension for Corner Applications details, refer to the Application Guide.

Worksurface Only (W) Mounting Style **cannot** be specified with Standard-Height Pass-Through (S) option.

When Worksurface Only (W) option is specified, only the Not Applicable Hardware Finish (NA) option is available.

Not Applicable Hardware Finish (NA) option is **not** available with Mounting Styles Support Connection on Left or Right (L or R).

Cable Pass-Through Ring comes in a Platinum Coordinate.

PRODUCT OPTIONS

Mounting Style	Datum Height	Glass Starting Height	Width	Width Extension for Corner Application
L Support Connection on Left	42, 51, 57	29, 42	24, 30, 36, 42, 48, 54, 60, 66, 72, 78, 84	**B** Both Sides
R Support Connection on Right				**L** One Side – Left
W Worksurface Only				**R** One Side – Right
				S Standard Width

SAMPLE ORDER CODE

JNSFGW L	51	29	72	S

PRODUCT OPTIONS CONTINUED

Alignment Holes	Cable Pass-Through	Screen Finish	Frame Finish	Glass Finish	Hardware Finish
N Without Alignment Holes	**N** No Pass-Through (Shown)	Source Laminate	Foundation	**Standard Glass:**	Foundation
W With Aligment Holes (Shown)	**S** Standard-Height Pass-Through		Mica	**CL** Clear	Mica
			Accent	**FT** Frost	Accent
				FB Satin	Coordinate Colors
				Low Iron Glass:	**NA** Not Applicable
				LA Clear – Low Iron	
				LB Frost – Low Iron	

SAMPLE ORDER CODE CONTINUED

N	N	XS	74	CL	NA

See Pricing on the following page.

JNSFGW

Floor Screen with Glass – Worksurface-Mounted (Continued)

DIMENSIONS INCHES / MM | **PRICING**

WORKSURFACE ONLY (W)

29" GLASS STARTING HEIGHT

BOTH SIDES (B)

SOURCE LAMINATE SCREEN FINISH

H	W	Clear (CL)	Frost (FT)	Satin (FB)	Clear – Low Iron (LA)	Frost – Low Iron (LB)
42 / 1067	24 / 610	n/a	n/a	n/a	n/a	n/a
42 / 1067	30 / 762	n/a	n/a	n/a	n/a	n/a
42 / 1067	36 / 914	n/a	n/a	n/a	n/a	n/a
42 / 1067	42 / 1067	n/a	n/a	n/a	n/a	n/a
42 / 1067	48 / 1219	762	798	923	826	855
42 / 1067	54 / 1372	822	864	1003	892	930
42 / 1067	60 / 1524	916	965	1119	996	1034
42 / 1067	66 / 1676	991	1043	1215	1077	1119
42 / 1067	72 / 1829	1061	1117	1303	1154	1203
42 / 1067	78 / 1981	1136	1197	1399	1236	1288
42 / 1067	84 / 2134	1208	1274	1493	1318	1373
51 / 1295	24 / 610	n/a	n/a	n/a	n/a	n/a
51 / 1295	30 / 762	n/a	n/a	n/a	n/a	n/a
51 / 1295	36 / 914	n/a	n/a	n/a	n/a	n/a
51 / 1295	42 / 1067	n/a	n/a	n/a	n/a	n/a
51 / 1295	48 / 1219	890	954	1164	998	1047
51 / 1295	54 / 1372	964	1035	1273	1083	1141
51 / 1295	60 / 1524	1070	1150	1415	1201	1270
51 / 1295	66 / 1676	1173	1260	1551	1319	1390
51 / 1295	72 / 1829	1269	1363	1680	1426	1506
51 / 1295	78 / 1981	1369	1475	1814	1542	1627
51 / 1295	84 / 2134	1470	1581	1949	1654	1746

ONE SIDE – LEFT OR RIGHT (L or R) OR STANDARD WIDTH (S)

42 / 1067	24 / 610	524	544	606	555	573
42 / 1067	30 / 762	583	609	683	622	641
42 / 1067	36 / 914	645	674	767	694	715
42 / 1067	42 / 1067	703	735	846	758	785
42 / 1067	48 / 1219	762	798	923	826	855
42 / 1067	54 / 1372	822	864	1003	892	930
42 / 1067	60 / 1524	916	965	1119	996	1034
42 / 1067	66 / 1676	991	1043	1215	1077	1119
42 / 1067	72 / 1829	1061	1117	1303	1154	1203
42 / 1067	78 / 1981	1136	1197	1399	1236	1288
42 / 1067	84 / 2134	1208	1274	1493	1318	1373
51 / 1295	24 / 610	604	635	742	657	684
51 / 1295	30 / 762	676	715	849	742	773
51 / 1295	36 / 914	747	796	952	827	866
51 / 1295	42 / 1067	821	877	1061	914	961
51 / 1295	48 / 1219	890	954	1164	998	1047
51 / 1295	54 / 1372	964	1035	1273	1083	1141
51 / 1295	60 / 1524	1070	1150	1415	1201	1270
51 / 1295	66 / 1676	1173	1260	1551	1319	1390
51 / 1295	72 / 1829	1269	1363	1680	1426	1506
51 / 1295	78 / 1981	1369	1475	1814	1542	1627
51 / 1295	84 / 2134	1470	1581	1949	1654	1746

Pricing is continued on the following page.

J N S F G W

Floor Screen with Glass – Worksurface-Mounted (Continued)

DIMENSIONS INCHES / MM | **PRICING**

SUPPORT CONNECTION ON LEFT OR RIGHT (L or R)

29" GLASS STARTING HEIGHT

BOTH SIDES (B)

SOURCE LAMINATE SCREEN FINISH

H	W	Clear (CL)	Frost (FT)	Satin (FB)	Clear – Low Iron (LA)	Frost – Low Iron (LB)
42 / 1067	42 / 1067	n/a	n/a	n/a	n/a	n/a
42 / 1067	48 / 1219	762	798	923	826	855
42 / 1067	54 / 1372	822	864	1003	892	930
42 / 1067	60 / 1524	916	965	1119	996	1034
42 / 1067	66 / 1676	991	1043	1215	1077	1119
42 / 1067	72 / 1829	1061	1117	1303	1154	1203
42 / 1067	78 / 1981	1136	1197	1399	1236	1288
42 / 1067	84 / 2134	1208	1274	1493	1318	1373
51 / 1295	42 / 1067	n/a	n/a	n/a	n/a	n/a
51 / 1295	48 / 1219	890	954	1164	998	1047
51 / 1295	54 / 1372	964	1035	1273	1083	1141
51 / 1295	60 / 1524	1070	1150	1415	1201	1270
51 / 1295	66 / 1676	1173	1260	1551	1319	1390
51 / 1295	72 / 1829	1269	1363	1680	1426	1506
51 / 1295	78 / 1981	1369	1475	1814	1542	1627
51 / 1295	84 / 2134	1470	1581	1949	1654	1746

ONE SIDE – LEFT OR RIGHT (L or R) OR STANDARD WIDTH (S)

42 / 1067	42 / 1067	703	735	846	758	785
42 / 1067	48 / 1219	762	798	923	826	855
42 / 1067	54 / 1372	822	864	1003	892	930
42 / 1067	60 / 1524	916	965	1119	996	1034
42 / 1067	66 / 1676	991	1043	1215	1077	1119
42 / 1067	72 / 1829	1061	1117	1303	1154	1203
42 / 1067	78 / 1981	1136	1197	1399	1236	1288
42 / 1067	84 / 2134	1208	1274	1493	1318	1373
51 / 1295	42 / 1067	821	877	1061	914	961
51 / 1295	48 / 1219	890	954	1164	998	1047
51 / 1295	54 / 1372	964	1035	1273	1083	1141
51 / 1295	60 / 1524	1070	1150	1415	1201	1270
51 / 1295	66 / 1676	1173	1260	1551	1319	1390
51 / 1295	72 / 1829	1269	1363	1680	1426	1506
51 / 1295	78 / 1981	1369	1475	1814	1542	1627
51 / 1295	84 / 2134	1470	1581	1949	1654	1746

Pricing is continued on the following page.

JNSFGW
Floor Screen with Glass – Worksurface-Mounted (Continued)

DIMENSIONS INCHES / MM | **PRICING**

WORKSURFACE ONLY (W)

42" GLASS STARTING HEIGHT

BOTH SIDES (B)

SOURCE LAMINATE SCREEN FINISH

H	W	Clear (CL)	Frost (FT)	Satin (FB)	Clear – Low Iron (LA)	Frost – Low Iron (LB)
51 / 1295	24 / 610	n/a	n/a	n/a	n/a	n/a
51 / 1295	30 / 762	n/a	n/a	n/a	n/a	n/a
51 / 1295	36 / 914	n/a	n/a	n/a	n/a	n/a
51 / 1295	42 / 1067	n/a	n/a	n/a	n/a	n/a
51 / 1295	48 / 1219	783	810	896	825	848
51 / 1295	54 / 1372	848	878	973	898	923
51 / 1295	60 / 1524	944	976	1086	999	1026
51 / 1295	66 / 1676	1015	1050	1169	1074	1104
51 / 1295	72 / 1829	1083	1121	1252	1148	1179
51 / 1295	78 / 1981	1152	1194	1333	1222	1260
51 / 1295	84 / 2134	1225	1273	1423	1303	1340
57 / 1448	24 / 610	n/a	n/a	n/a	n/a	n/a
57 / 1448	30 / 762	n/a	n/a	n/a	n/a	n/a
57 / 1448	36 / 914	n/a	n/a	n/a	n/a	n/a
57 / 1448	42 / 1067	n/a	n/a	n/a	n/a	n/a
57 / 1448	48 / 1219	1014	1056	1200	1085	1123
57 / 1448	54 / 1372	1102	1152	1312	1184	1224
57 / 1448	60 / 1524	1219	1274	1453	1309	1355
57 / 1448	66 / 1676	1344	1403	1602	1441	1494
57 / 1448	72 / 1829	1465	1530	1746	1574	1626
57 / 1448	78 / 1981	1589	1659	1892	1707	1764
57 / 1448	84 / 2134	1712	1790	2039	1837	1902

ONE SIDE – LEFT OR RIGHT (L or R) OR STANDARD WIDTH (S)

51 / 1295	24 / 610	531	541	587	554	563
51 / 1295	30 / 762	594	613	664	622	635
51 / 1295	36 / 914	658	679	743	690	708
51 / 1295	42 / 1067	720	744	817	758	777
51 / 1295	48 / 1219	783	810	896	825	848
51 / 1295	54 / 1372	848	878	973	898	923
51 / 1295	60 / 1524	944	976	1086	999	1026
51 / 1295	66 / 1676	1015	1050	1169	1074	1104
51 / 1295	72 / 1829	1083	1121	1252	1148	1179
51 / 1295	78 / 1981	1152	1194	1333	1222	1260
51 / 1295	84 / 2134	1225	1273	1423	1303	1340
57 / 1448	24 / 610	676	699	769	711	731
57 / 1448	30 / 762	763	791	881	811	830
57 / 1448	36 / 914	848	880	990	903	930
57 / 1448	42 / 1067	933	971	1098	997	1027
57 / 1448	48 / 1219	1014	1056	1200	1085	1123
57 / 1448	54 / 1372	1102	1152	1312	1184	1224
57 / 1448	60 / 1524	1219	1274	1453	1309	1355
57 / 1448	66 / 1676	1344	1403	1602	1441	1494
57 / 1448	72 / 1829	1465	1530	1746	1574	1626
57 / 1448	78 / 1981	1589	1659	1892	1707	1764
57 / 1448	84 / 2134	1712	1790	2039	1837	1902

Pricing is continued on the following page.

J N S F G W

Floor Screen with Glass – Worksurface-Mounted (Continued)

DIMENSIONS
INCHES / MM

PRICING

SUPPORT CONNECTION ON LEFT OR RIGHT (L or R)
42" GLASS STARTING HEIGHT
BOTH SIDES (B)
SOURCE LAMINATE SCREEN FINISH

H	W	Clear (CL)	Frost (FT)	Satin (FB)	Clear – Low Iron (LA)	Frost – Low Iron (LB)
51 / 1295	42 / 1067	n/a	n/a	n/a	n/a	n/a
51 / 1295	48 / 1219	783	810	896	825	848
51 / 1295	54 / 1372	848	878	973	898	923
51 / 1295	60 / 1524	944	976	1086	999	1026
51 / 1295	66 / 1676	1015	1050	1169	1074	1104
51 / 1295	72 / 1829	1083	1121	1252	1148	1179
51 / 1295	78 / 1981	1152	1194	1333	1222	1260
51 / 1295	84 / 2134	1225	1273	1423	1303	1340
57 / 1448	42 / 1067	n/a	n/a	n/a	n/a	n/a
57 / 1448	48 / 1219	1014	1056	1200	1085	1123
57 / 1448	54 / 1372	1102	1152	1312	1184	1224
57 / 1448	60 / 1524	1219	1274	1453	1309	1355
57 / 1448	66 / 1676	1344	1403	1602	1441	1494
57 / 1448	72 / 1829	1465	1530	1746	1574	1626
57 / 1448	78 / 1981	1589	1659	1892	1707	1764
57 / 1448	84 / 2134	1712	1790	2039	1837	1902

ONE SIDE – LEFT OR RIGHT (L or R) OR STANDARD WIDTH (S)

51 / 1295	42 / 1067	720	744	817	758	777
51 / 1295	48 / 1219	783	810	896	825	848
51 / 1295	54 / 1372	848	878	973	898	923
51 / 1295	60 / 1524	944	976	1086	999	1026
51 / 1295	66 / 1676	1015	1050	1169	1074	1104
51 / 1295	72 / 1829	1083	1121	1252	1148	1179
51 / 1295	78 / 1981	1152	1194	1333	1222	1260
51 / 1295	84 / 2134	1225	1273	1423	1303	1340
57 / 1448	42 / 1067	933	971	1098	997	1027
57 / 1448	48 / 1219	1014	1056	1200	1085	1123
57 / 1448	54 / 1372	1102	1152	1312	1184	1224
57 / 1448	60 / 1524	1219	1274	1453	1309	1355
57 / 1448	66 / 1676	1344	1403	1602	1441	1494
57 / 1448	72 / 1829	1465	1530	1746	1574	1626
57 / 1448	78 / 1981	1589	1659	1892	1707	1764
57 / 1448	84 / 2134	1712	1790	2039	1837	1902

JNSLS
Linking Strip for Glass Screen

This linking strip is required to align, straighten up and protect glass screens.

WHAT'S INCLUDED
1 linking strip for glass.

PRODUCT OPTIONS

Screen Datum Height	Glass Starting Height	Finish
42, 51, 57	18, 29, 42	Foundation Mica Accent

SAMPLE ORDER CODE

JNSLS 51	**29**	**53**

SCREEN DATUM HEIGHT

PRICING

H	18" GLASS STARTING	29" GLASS STARTING	42" GLASS STARTING
42 / 1067	55	48	n/a
51 / 1295	61	55	n/a
57 / 1448	n/a	n/a	50

This cover allows to cover holes on worksurfaces, when Add-On Screens are removed.

WHAT'S INCLUDED
1 cover, 2 caps and mounting hardware.

JNSWRC
Worksurface Retrofit Cover

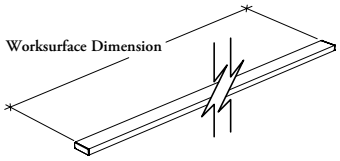

PRODUCT OPTIONS

Worksurface Dimension	Finish
18, 24, 27, 30, 33, 36, 39, 42, 45, 48, 51, 54, 60, 63, 66, 69, 72, 75, 78, 81, 84, 90, 96	Foundation Mica Accent Coordinate Colors

SAMPLE ORDER CODE

JNSWRC 51	53

WORKSURFACE DIMENSION	PRICING
W	
18 / 457	21
24 / 610	23
27 / 686	24
30 / 762	26
36 / 838	27
36 / 914	28
39 / 991	29
42 / 1067	31
45 / 1143	31
48 / 1219	32
51 / 1295	35
54 / 1372	36
57 / 1448	39
60 / 1524	41
63 / 1600	48
66 / 1676	49
69 / 1753	50
72 / 1829	52
75 / 1905	55
78 / 1981	56
81 / 2057	58
84 / 2134	59
90 / 2286	65
96 / 2438	68

leg-mounted screens

leg-mounted screens product map

J N S E S L Solid Elevated Screen – Leg-Mounted

Page 1122

J N S E G L Glass Elevated Screen – Leg-Mounted

Page 1124

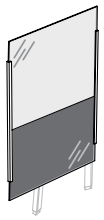

J N S E F L Fabric Elevated Screen – Leg-Mounted

Page 1126

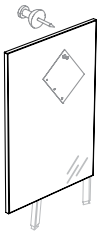

J N S E E L Felt Elevated Screen – Leg-Mounted

Page 1128

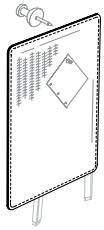

J N S F S L Floor Screen – Leg-Mounted – One User

Page 1130

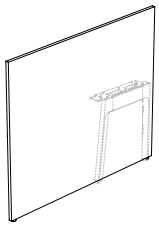

J N S F S T Floor Screen – Leg-Mounted – Two Users

Page 1132

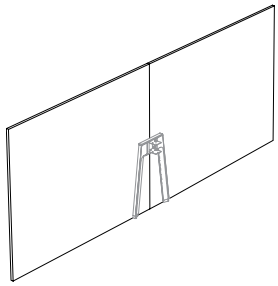

J N S F G O Floor Screen with Glass – Leg-Mounted – One User

Page 1134

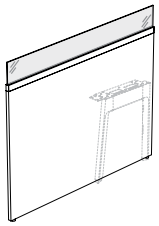

J N S F G T Floor Screen with Glass – Leg-Mounted – Two Users

Page 1138

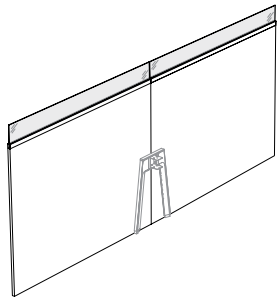

leg-mounted screens product map

J N S F O L Floor Screen with Metal Tower – Open – Leg-Mounted – One User

Page 1142

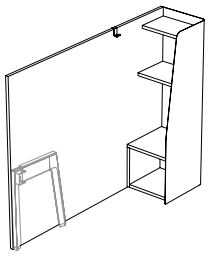

J N S F O T Floor Screen with Metal Tower – Open – Leg-Mounted – Two Users

Page 1144

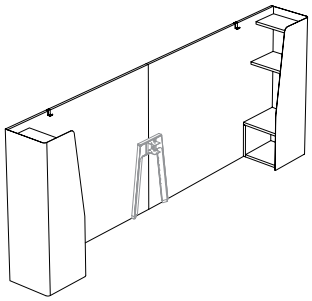

J N S F D L Floor Screen with Metal Tower – One Drawer – Leg-Mounted – One User

Page 1146

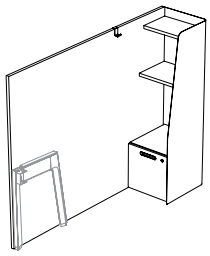

J N S F D T Floor Screen with Metal Tower – One Drawer – Leg-Mounted – Two Users

Page 1148

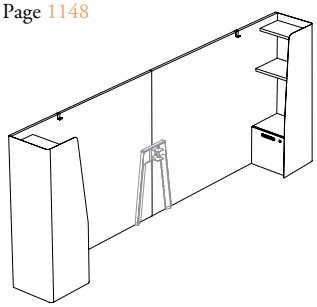

J N S F T L Floor Screen with Metal Tower – Two Drawers – Leg-Mounted – One User

Page 1150

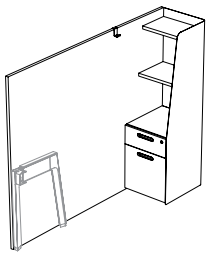

J N S F T T Floor Screen with Metal Tower – Two Drawers – Leg-Mounted – Two Users

Page 1152

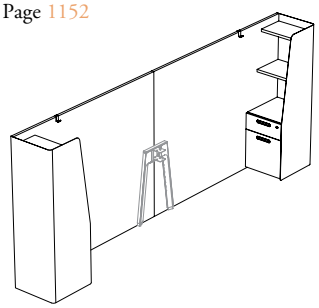

EZ compatible

JNSESL

Solid Elevated Screen – Leg-Mounted

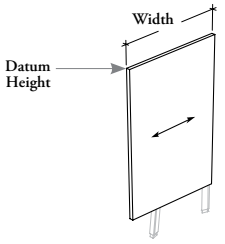

This screen mounts directly to a structural leg to create privacy and physical separation between workstation and the corridor.

WHAT'S INCLUDED
1 solid screen, linking devices and caps (as specified) and mounting hardware.

WHAT'S EXCLUDED
Structural Legs and EZ Structural Legs.

NOTES
The solid panel is 1" thick.

For Width Extension for Corner Applications details, refer to the Application Guide.

When Double-Sided Leg Overlay (D) Configuration is specified, the One-Side Extended (O) Width Extension for Corner Application is **not** available.

When Double-Sided Leg Overlay (D) Configuration is specified, the Without Alignment Holes (N) is available only.

PRODUCT OPTIONS

Configuration	Modesty Base Height	Datum Height	Width	Width Extension for Corner Application	Corner Detail	Alignment Holes	Screen Finish
D Double-Sided Leg Overlay **L** Left **R** Right (Shown)	**10** 10" from Floor	42, 51, 57	18, 24, 30, 36, 48, 54, 60, 66, 72	**O** One Side Extended **S** Standard Width	**S** Standard	**N** Without Alignment Holes (Shown) **W** With Alignment Holes	Source Laminate

SAMPLE ORDER CODE

JNSESL L	10	51	24	S	S	N	XS

DIMENSIONS
INCHES / MM

H	W
42 / 1067	18 / 457
42 / 1067	24 / 610
42 / 1067	30 / 762
42 / 1067	36 / 914
42 / 1067	48 / 1219
42 / 1067	54 / 1372
42 / 1067	60 / 1524
42 / 1067	66 / 1676
42 / 1067	72 / 1829

PRICING

LEFT OR RIGHT (L or R)	DOUBLE-SIDED LEG OVERLAY (D)
276	n/a
299	n/a
324	n/a
347	347
n/a	392
n/a	434
n/a	471
n/a	495
n/a	520

Pricing is continued on the following page.

JNSESL

Solid Elevated Screen – Leg-Mounted (Continued)

DIMENSIONS INCHES / MM		PRICING	
H	W	LEFT OR RIGHT (L or R)	DOUBLE-SIDED LEG OVERLAY (D)
51 / 1295	18 / 457	298	n/a
51 / 1295	24 / 610	327	n/a
51 / 1295	30 / 762	356	n/a
51 / 1295	36 / 914	384	384
51 / 1295	48 / 1219	n/a	443
51 / 1295	54 / 1372	n/a	487
51 / 1295	60 / 1524	n/a	532
51 / 1295	66 / 1676	n/a	561
51 / 1295	72 / 1829	n/a	589
57 / 1448	18 / 457	314	n/a
57 / 1448	24 / 610	346	n/a
57 / 1448	30 / 762	378	n/a
57 / 1448	36 / 914	411	411
57 / 1448	48 / 1219	n/a	476
57 / 1448	54 / 1372	n/a	525
57 / 1448	60 / 1524	n/a	573
57 / 1448	66 / 1676	n/a	607
57 / 1448	72 / 1829	n/a	640

EZ compatible

JNSEGL

Glass Elevated Screen – Leg-Mounted

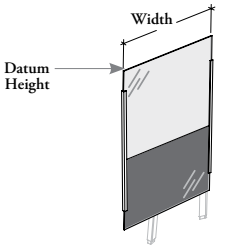

This screen mounts directly to a Structural Leg to create privacy and physical separation between workstation and the corridor. The lower portion of the screen which is back-painted acts as a modesty panel.

WHAT'S INCLUDED
1 glass screen and mounting hardware.

WHAT'S EXCLUDED
Worksurfaces, Structural Legs and Linking Strip for Glass Screen.

NOTES
The tempered glass is 1/4" (6mm) thick.

Frost –Low Iron Finish (LB) is single-sided etched.

For Width Extension for Corner Applications details, refer to the Application Guide.

When Double-Sided Leg Overlay (D) Configuration is specified, the One-Side Extended (O) Width Extension for Corner Application is **not** available.

PRODUCT OPTIONS

Configuration	Modesty Base Height	Datum Height	Width	Width Extension for Corner Application	Corner Detail	Glass Finish	Glass Finish – Modesty Height	Hardware Finish
D Double-Sided Leg Overlay **L** Left **R** Right (Shown)	**10** 10" from Floor	42, 51	18, 24, 30, 36, 48, 60	**O** One Side Extended **S** Standard Width	**S** Standard	**LA** Clear – Low Iron **LB** Frost – Low Iron	Back-Painted	Foundation Mica Accent

SAMPLE ORDER CODE

JNSEGL L	10	51	30	S	S	LA	K1	74

DIMENSIONS
INCHES / MM

PRICING

H	W	LEFT OR RIGHT (L or R) Clear – Low Iron (LA)	LEFT OR RIGHT (L or R) Frost – Low Iron (LB)	DOUBLE-SIDED LEG OVERLAY (D) Clear – Low Iron (LA)	DOUBLE-SIDED LEG OVERLAY (D) Frost – Low Iron (LB)
42 / 1067	18 / 457	784	812	n/a	n/a
42 / 1067	24 / 610	849	885	n/a	n/a
42 / 1067	30 / 762	913	959	n/a	n/a
42 / 1067	36 / 914	n/a	n/a	976	1032
42 / 1067	48 / 1219	n/a	n/a	1107	1182
42 / 1067	60 / 1524	n/a	n/a	1237	1329
51 / 1295	18 / 457	841	877	n/a	n/a
51 / 1295	24 / 610	923	972	n/a	n/a
51 / 1295	30 / 762	1005	1064	n/a	n/a
51 / 1295	36 / 914	n/a	n/a	1087	1159
51 / 1295	48 / 1219	n/a	n/a	1250	1347
51 / 1295	60 / 1524	n/a	n/a	1414	1536

EZ compatible

JNSEFL

Fabric Elevated Screen – Leg-Mounted

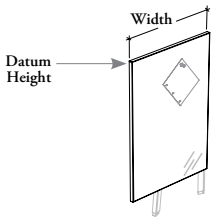

This screen mounts directly to a structural leg to add tackable surface, create privacy and physical separation between workstation and the corridor.

WHAT'S INCLUDED
1 fabric screen, linking devices and mounting hardware.

WHAT'S EXCLUDED
Structural Legs and EZ Structural Legs.

NOTES
The fabric panel is 1 1/4" thick.

For Width Extension for Corner Applications details, refer to the Application Guide.

When Double-Sided Leg Overlay (D) Configuration is specified, the One-Side Extended (O) Width Extension for Corner Application is **not** available.

Fabric for each side is specified separately.

PRODUCT OPTIONS

Configuration	Modesty Base Height	Datum Height	Width	Width Extension for Corner Application	Inside Finish	Outside Finish	Frame Finish
D Double-Sided Leg Overlay **L** Left **R** Right (Shown)	**10** 10" from Floor	42, 51, 57	18, 24, 30, 36, 48, 54, 60, 66, 72	**O** One Side Extended **S** Standard Width	Fabric	Fabric	Foundation Mica Accent

SAMPLE ORDER CODE

JNSEFL L	10	51	24	S	T540	T540	74

DIMENSIONS
INCHES / MM

PRICING

		LEFT OR RIGHT (L or R)							
		INSIDE/OUTSIDE FINISH							
H	W	Gr. A/COM	Gr. 1	Gr. 2	Gr. 3	Gr. 4	Gr. 5	Gr. 6	Gr. 7
42 / 1067	18 / 457	610	672	699	720	741	763	783	801
42 / 1067	24 / 610	646	723	760	780	814	837	865	887
42 / 1067	30 / 762	686	777	819	847	882	914	941	967
42 / 1067	36 / 914	721	828	878	910	948	989	1023	1054
51 / 1295	18 / 457	622	698	735	755	786	813	837	857
51 / 1295	24 / 610	686	780	821	852	886	918	949	974
51 / 1295	30 / 762	741	854	906	943	987	1024	1060	1095
51 / 1295	36 / 914	803	937	999	1038	1088	1132	1175	1213
57 / 1448	18 / 457	642	730	768	794	826	857	882	907
57 / 1448	24 / 610	709	815	863	898	935	975	1012	1039
57 / 1448	30 / 762	770	900	958	997	1042	1090	1131	1164
57 / 1448	36 / 914	834	986	1054	1097	1152	1207	1252	1297

Pricing is continued on the following page.

JNSEFL

Fabric Elevated Screen – Leg-Mounted (Continued)

DIMENSIONS INCHES / MM		PRICING							
		DOUBLE-SIDED LEG OVERLAY (D)							
		INSIDE/OUTSIDE FINISH							
H	W	Gr. A/COM	Gr. 1	Gr. 2	Gr. 3	Gr. 4	Gr. 5	Gr. 6	Gr. 7
42 / 1067	36 / 914	721	828	878	910	948	989	1023	1054
42 / 1067	48 / 1219	794	932	993	1035	1088	1141	1179	1220
42 / 1067	54 / 1372	882	1036	1105	1151	1209	1266	1307	1354
42 / 1067	60 / 1524	968	1139	1218	1265	1330	1391	1439	1488
42 / 1067	66 / 1676	1020	1206	1288	1343	1412	1478	1532	1588
42 / 1067	72 / 1829	1072	1271	1363	1422	1495	1567	1629	1689
51 / 1295	36 / 914	803	937	999	1038	1088	1132	1175	1213
51 / 1295	48 / 1219	919	1090	1171	1218	1282	1346	1393	1445
51 / 1295	54 / 1372	980	1174	1260	1314	1385	1456	1513	1572
51 / 1295	60 / 1524	1048	1257	1352	1413	1491	1570	1635	1693
51 / 1295	66 / 1676	1106	1334	1437	1504	1589	1676	1739	1806
51 / 1295	72 / 1829	1167	1413	1524	1598	1690	1784	1853	1927
57 / 1448	36 / 914	834	986	1054	1097	1152	1207	1252	1297
57 / 1448	48 / 1219	962	1157	1243	1301	1375	1446	1503	1561
57 / 1448	54 / 1372	1033	1250	1343	1407	1488	1566	1627	1690
57 / 1448	60 / 1524	1099	1335	1442	1512	1602	1687	1755	1826
57 / 1448	66 / 1676	1162	1420	1534	1611	1709	1802	1876	1955
57 / 1448	72 / 1829	1230	1508	1634	1715	1819	1920	2006	2083

EZ compatible

JNSEEL

Felt Elevated Screen – Leg-Mounted

This screen mounts directly to structural leg to add acoustic and tackable surface, create privacy and physical separation between workstation and the corridor.

WHAT'S INCLUDED
1 felt screen and mounting hardware.

WHAT'S EXCLUDED
Worksurfaces, Structural Legs and EZ Structural Legs.

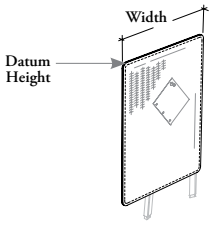

PRODUCT OPTIONS

Configuration	Modesty Base Height	Datum Height	Width	Width Extension for Corner Application	Corner Detail	Felt Finish	Stitches Finish	Hardware Finish
D Double-Sided Leg Overlay **L** Left **R** Right (Shown)	**10** 10" from Floor	42, 51, 57	18, 24, 30, 36, 48, 54, 60, 66, 72	**S** Standard Width	**R** Radius	Loft	**C** Carbon Coordinate **E** Shale Coordinate **G** Carrara Coordinate **M** Umber Coordinate	**52** Ebony

SAMPLE ORDER CODE

JNSEEL L	10	51	24	S	R	RB11	C	52

DIMENSIONS INCHES / MM		PRICING	
H	W	LEFT OR RIGHT (L or R)	DOUBLE-SIDED LEG OVERLAY (D)
42 / 1067	18 / 457	332	n/a
42 / 1067	24 / 610	443	n/a
42 / 1067	30 / 762	552	n/a
42 / 1067	36 / 914	639	639
42 / 1067	48 / 1219	n/a	807
42 / 1067	54 / 1372	n/a	919
42 / 1067	60 / 1524	n/a	1006
42 / 1067	66 / 1676	n/a	1090
42 / 1067	72 / 1829	n/a	1176
51 / 1295	18 / 457	454	n/a
51 / 1295	24 / 610	563	n/a
51 / 1295	30 / 762	673	n/a
51 / 1295	36 / 914	780	780
51 / 1295	48 / 1219	n/a	999
51 / 1295	54 / 1372	n/a	1137
51 / 1295	60 / 1524	n/a	1244
51 / 1295	66 / 1676	n/a	1354
51 / 1295	72 / 1829	n/a	1463

DIMENSIONS INCHES / MM		PRICING	
H	W	LEFT OR RIGHT (L or R)	DOUBLE-SIDED LEG OVERLAY (D)
57 / 1448	18 / 457	501	n/a
57 / 1448	24 / 610	625	n/a
57 / 1448	30 / 762	752	n/a
57 / 1448	36 / 914	877	877
57 / 1448	48 / 1219	n/a	1126
57 / 1448	54 / 1372	n/a	1278
57 / 1448	60 / 1524	n/a	1404
57 / 1448	66 / 1676	n/a	1529
57 / 1448	72 / 1829	n/a	1654

EZ compatible

JNSFSL

Floor Screen – Leg-Mounted – One User

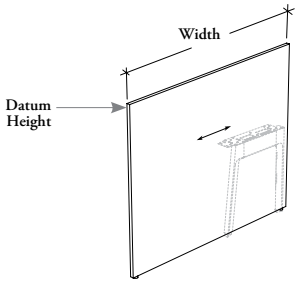

This screen attaches to side of a structural leg to provide space division.

WHAT'S INCLUDED
1 solid screen, 1 cable pass-through ring (as specified), linking devices and caps (as specified), levelers and mounting hardware.

WHAT'S EXCLUDED
Structural Legs, EZ Structural Legs, Cable Pass-Through Cover, Sit and Slide Screens.

NOTES
The solid panel is 1" thick.

Hardware Finish should be specified to match with the Structural Leg.

Pass-Through ring comes in a Platinum Coordinate.

For Width Extension for Corner Applications details, refer to the Application Guide.

PRODUCT OPTIONS

Configuration	Datum Height	Width	Width Extension for Corner Application	Corner Detail	Alignment Holes	Cable Pass-Through	Screen Finish	Hardware Finish
L Left **R** Right (Shown)	42, 51, 57	18, 24, 30, 36, 42, 48, 54, 60, 66, 72, 78, 84	**O** One Side Extended **S** Standard Width	**R** Radius **S** Standard (Shown)	**N** Without Alignment Holes (Shown) **W** With Aligment Holes	**N** No Pass-Through (Shown) **S** Standard-Height Pass-Through	Source Laminate	Foundation Mica Accent Coordinate Colors

SAMPLE ORDER CODE

JNSFSL L	51	24	S	S	W	S	XS	74

DIMENSIONS
INCHES / MM

PRICING

H	W	LEFT OR RIGHT (L or R) STANDARD (S)	RADIUS (R)
42 / 1067	18 / 457	281	325
42 / 1067	24 / 610	318	365
42 / 1067	30 / 762	353	404
42 / 1067	36 / 914	387	443
42 / 1067	42 / 1067	426	485
42 / 1067	48 / 1219	463	527
42 / 1067	54 / 1372	500	567
42 / 1067	60 / 1524	582	653
42 / 1067	66 / 1676	615	690
42 / 1067	72 / 1829	653	732
42 / 1067	78 / 1981	689	773
42 / 1067	84 / 2134	730	817
51 / 1295	18 / 457	304	354
51 / 1295	24 / 610	351	405
51 / 1295	30 / 762	396	452
51 / 1295	36 / 914	437	499
51 / 1295	42 / 1067	480	545
51 / 1295	48 / 1219	527	596
51 / 1295	54 / 1372	571	644
51 / 1295	60 / 1524	654	731
51 / 1295	66 / 1676	701	782
51 / 1295	72 / 1829	746	831
51 / 1295	78 / 1981	788	877
51 / 1295	84 / 2134	829	922

Pricing is continued on the following page.

JNSFSL

Floor Screen – Leg-Mounted – One User (Continued)

DIMENSIONS INCHES / MM		PRICING	
		LEFT OR RIGHT (L or R)	
H	W	STANDARD (S)	RADIUS (R)
57 / 1448	18 / 457	324	377
57 / 1448	24 / 610	375	432
57 / 1448	30 / 762	422	484
57 / 1448	36 / 914	469	534
57 / 1448	42 / 1067	521	590
57 / 1448	48 / 1219	568	641
57 / 1448	54 / 1372	617	694
57 / 1448	60 / 1524	704	785
57 / 1448	66 / 1676	757	842
57 / 1448	72 / 1829	807	897
57 / 1448	78 / 1981	854	947
57 / 1448	84 / 2134	900	996

EZ compatible

JNSFST

Floor Screen – Leg-Mounted – Two Users

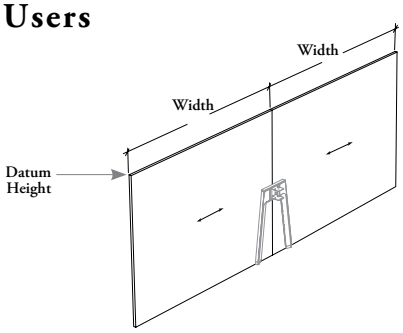

This screen attaches to side of a shared structural leg to provide double-sided space division.

WHAT'S INCLUDED
2 solid screens, 1 cable pass-through ring (as specified), linking devices and caps (as specified), levelers and mounting hardware.

WHAT'S EXCLUDED
Structural Legs, EZ Structural Legs, Cable Pass-Through Cover, Sit and Slide Screens.

NOTES
The solid panels are 1" thick.

Hardware Finish should be specified to match with the Structural Leg.

Pass-Through ring comes in a Platinum Coordinate.

PRODUCT OPTIONS

Datum Height	Width	Corner Detail	Cable Pass-Through	Screen Finish	Hardware Finish
42, 51, 57	036, 048, 060, 072, 084, 096, 108, 120, 132, 144, 156, 168	**R** Radius **S** Standard (Shown)	**N** No Pass-Through (Shown) **S** Standard-Height Pass-Through	Source Laminate	Foundation Mica Accent Coordinate Colors

SAMPLE ORDER CODE

JNSFST 51	084	R	N	XS	74

DIMENSIONS INCHES / MM

PRICING

H	W	STANDARD (S)	RADIUS (R)
42 / 1067	36 / 914	387	443
42 / 1067	48 / 1219	463	527
42 / 1067	60 / 1524	582	653
42 / 1067	72 / 1829	653	732
42 / 1067	84 / 2134	730	817
42 / 1067	96 / 2438	926	1053
42 / 1067	108 / 2743	1000	1134
42 / 1067	120 / 3048	1165	1306
42 / 1067	132 / 3353	1230	1380
42 / 1067	144 / 3658	1306	1464
42 / 1067	156 / 3962	1378	1545
42 / 1067	168 / 4267	1459	1633
51 / 1295	36 / 914	437	499
51 / 1295	48 / 1219	527	596
51 / 1295	60 / 1524	654	731
51 / 1295	72 / 1829	746	831
51 / 1295	84 / 2134	829	922
51 / 1295	96 / 2438	1053	1192
51 / 1295	108 / 2743	1141	1288
51 / 1295	120 / 3048	1308	1462
51 / 1295	132 / 3353	1401	1564
51 / 1295	144 / 3658	1492	1661
51 / 1295	156 / 3962	1575	1754
51 / 1295	168 / 4267	1659	1844

Pricing is continued on the following page.

JNSFST

Floor Screen – Leg-Mounted – Two Users (Continued)

DIMENSIONS INCHES / MM		PRICING	
H	W	STANDARD (S)	RADIUS (R)
57 / 1448	36 / 914	469	534
57 / 1448	48 / 1219	568	641
57 / 1448	60 / 1524	704	785
57 / 1448	72 / 1829	807	897
57 / 1448	84 / 2134	900	996
57 / 1448	96 / 2438	1137	1283
57 / 1448	108 / 2743	1234	1387
57 / 1448	120 / 3048	1408	1571
57 / 1448	132 / 3353	1515	1684
57 / 1448	144 / 3658	1615	1793
57 / 1448	156 / 3962	1708	1893
57 / 1448	168 / 4267	1800	1993

EZ compatible

JNSFGO

Floor Screen with Glass – Leg-Mounted – One User

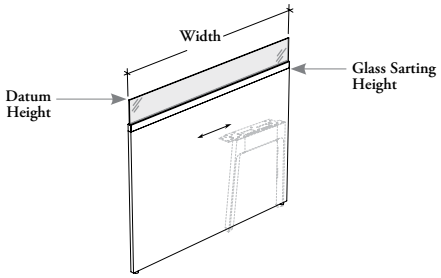

This screen attaches to side of a structural leg to provide space division.

WHAT'S INCLUDED
1 solid screen with glass, 1 cable pass-through ring (as specified), linking devices and caps, levelers and mounting hardware.

WHAT'S EXCLUDED
Structural Legs, EZ Structural Legs, Linking Strip for Glass Screen and Cable Pass-Through Cover.

NOTES
The solid panel is 1" thick and tempered glass is 1/4" (6 mm) thick.

Frost Finishes (FT or LB) are single-sided etched, Satin (FB) is etched on both sides.

Hardware Finish should be specified to match with the Structural Leg.

Cable Pass-Through Ring comes in a Platinum Coordinate.

For Width Extension for Corner Applications details, refer to the Application Guide.

PRODUCT OPTIONS

Configuration	Datum Height	Glass Starting Height	Width	Width Extension for Corner Application	Corner Details	Alignment Holes
L Left **R** Right (Shown)	42, 51, 57	28, 29, 42	18, 24, 30, 36, 42, 48, 54, 60, 66, 72, 78, 84	**O** One Side Extended **S** Standard Width	**R** Radius **S** Standard	**N** Without Alignment Holes (Shown) **W** With Aligment Holes

SAMPLE ORDER CODE

JNSFGO R	51	42	18	S	S	N

PRODUCT OPTIONS CONTINUED

Cable Pass-Through	Screen Finish	Frame Finish	Glass Finish	Hardware Finish
N No Pass-Through (Shown) **S** Standard-Height Pass-Through	Source Laminate	Foundation Mica Accent	**Standard Glass:** **CL** Clear **FT** Frost **FB** Satin **Low Iron Glass:** **LA** Clear – Low Iron **LB** Frost – Low Iron	Foundation Mica Accent Coordinate Colors

SAMPLE ORDER CODE CONTINUED

N	XS	74	FB	74

See Pricing on the following page.

JNSFGO

Floor Screen with Glass – Leg-Mounted – One User (Continued)

DIMENSIONS INCHES / MM

PRICING

28" GLASS STARTING HEIGHT

H	W	STANDARD (S) Clear (CL)	Frost (FT)	Satin (FB)	Clear – Low Iron (LA)	Frost – Low Iron (LB)	RADIUS (R) Clear (CL)	Frost (FT)	Satin (FB)	Clear – Low Iron (LA)	Frost – Low Iron (LB)
42 / 1067	18 / 457	445	458	505	470	479	529	542	588	553	563
42 / 1067	24 / 610	503	522	582	534	550	587	606	666	617	633
42 / 1067	30 / 762	560	585	657	599	616	644	668	740	682	699
42 / 1067	36 / 914	703	731	820	749	770	786	814	904	833	854
42 / 1067	42 / 1067	759	790	896	811	838	842	873	979	894	921
42 / 1067	48 / 1219	815	850	971	877	905	899	934	1054	960	988
42 / 1067	54 / 1372	873	914	1047	941	977	957	998	1131	1024	1060
42 / 1067	60 / 1524	964	1010	1159	1041	1078	1047	1094	1242	1124	1161
42 / 1067	66 / 1676	1035	1085	1249	1117	1158	1118	1168	1333	1201	1241
42 / 1067	72 / 1829	1103	1157	1336	1192	1239	1187	1240	1420	1276	1322
42 / 1067	78 / 1981	1174	1233	1427	1270	1320	1257	1317	1510	1354	1404
42 / 1067	84 / 2134	1244	1307	1517	1349	1401	1327	1391	1601	1433	1485
51 / 1295	18 / 457	594	618	695	632	651	677	702	778	716	734
51 / 1295	24 / 610	664	694	796	715	740	747	777	879	798	824
51 / 1295	30 / 762	733	771	899	797	827	817	855	983	880	911
51 / 1295	36 / 914	802	848	999	878	916	885	931	1082	962	1000
51 / 1295	42 / 1067	872	926	1103	962	1007	956	1009	1187	1045	1090
51 / 1295	48 / 1219	938	1000	1202	1042	1089	1022	1083	1285	1125	1173
51 / 1295	54 / 1372	1009	1078	1306	1124	1180	1093	1161	1390	1208	1263
51 / 1295	60 / 1524	1111	1188	1442	1238	1303	1195	1271	1525	1321	1386
51 / 1295	66 / 1676	1210	1293	1573	1350	1419	1293	1377	1656	1434	1502
51 / 1295	72 / 1829	1303	1393	1697	1453	1530	1386	1477	1781	1537	1614
51 / 1295	78 / 1981	1399	1500	1827	1565	1646	1482	1583	1911	1648	1730
51 / 1295	84 / 2134	1495	1602	1956	1673	1761	1579	1685	2039	1756	1844

29" GLASS STARTING HEIGHT

		STANDARD (S) Clear (CL)	Frost (FT)	Satin (FB)	Clear – Low Iron (LA)	Frost – Low Iron (LB)	RADIUS (R) Clear (CL)	Frost (FT)	Satin (FB)	Clear – Low Iron (LA)	Frost – Low Iron (LB)
42 / 1067	18 / 457	445	458	505	470	479	529	542	588	553	563
42 / 1067	24 / 610	503	522	582	534	550	587	606	666	617	633
42 / 1067	30 / 762	560	585	657	599	616	644	668	740	682	699
42 / 1067	36 / 914	619	647	737	666	687	703	731	820	749	770
42 / 1067	42 / 1067	675	706	812	727	754	759	790	896	811	838
42 / 1067	48 / 1219	732	767	887	793	821	815	850	971	877	905
42 / 1067	54 / 1372	790	831	964	857	893	873	914	1047	941	977
42 / 1067	60 / 1524	880	927	1075	957	994	964	1010	1159	1041	1078
42 / 1067	66 / 1676	951	1001	1166	1034	1074	1035	1085	1249	1117	1158
42 / 1067	72 / 1829	1020	1073	1253	1109	1155	1103	1157	1336	1192	1239
42 / 1067	78 / 1981	1090	1150	1343	1187	1237	1174	1233	1427	1270	1320
42 / 1067	84 / 2134	1160	1224	1434	1266	1318	1244	1307	1517	1349	1401

Pricing is continued on the following page.

J N S F G O

Floor Screen with Glass – Leg-Mounted – One User (Continued)

DIMENSIONS
INCHES / MM

PRICING

29" GLASS STARTING HEIGHT (CONTINUED)

H	W	STANDARD (S) Clear (CL)	Frost (FT)	Satin (FB)	Clear – Low Iron (LA)	Frost – Low Iron (LB)	RADIUS (R) Clear (CL)	Frost (FT)	Satin (FB)	Clear – Low Iron (LA)	Frost – Low Iron (LB)
51 / 1295	18 / 457	510	535	611	549	567	594	618	695	632	651
51 / 1295	24 / 610	580	610	712	631	657	664	694	796	715	740
51 / 1295	30 / 762	650	688	815	713	744	733	771	899	797	827
51 / 1295	36 / 914	718	764	915	795	833	802	848	999	878	916
51 / 1295	42 / 1067	789	842	1020	878	923	872	926	1103	962	1007
51 / 1295	48 / 1219	855	916	1118	958	1006	938	1000	1202	1042	1089
51 / 1295	54 / 1372	926	994	1223	1041	1096	1009	1078	1306	1124	1180
51 / 1295	60 / 1524	1028	1104	1358	1154	1219	1111	1188	1442	1238	1303
51 / 1295	66 / 1676	1126	1210	1489	1267	1335	1210	1293	1573	1350	1419
51 / 1295	72 / 1829	1219	1310	1614	1370	1447	1303	1393	1697	1453	1530
51 / 1295	78 / 1981	1315	1416	1743	1481	1563	1399	1500	1827	1565	1646
51 / 1295	84 / 2134	1412	1518	1872	1589	1677	1495	1602	1956	1673	1761

42" GLASS STARTING HEIGHT

		STANDARD (S) Clear (CL)	Frost (FT)	Satin (FB)	Clear – Low Iron (LA)	Frost – Low Iron (LB)	RADIUS (R) Clear (CL)	Frost (FT)	Satin (FB)	Clear – Low Iron (LA)	Frost – Low Iron (LB)
51 / 1295	18 / 457	451	459	492	469	476	535	543	575	552	559
51 / 1295	24 / 610	510	521	564	532	542	594	604	647	616	625
51 / 1295	30 / 762	571	588	638	597	610	654	672	722	681	694
51 / 1295	36 / 914	632	652	713	664	680	716	735	797	747	763
51 / 1295	42 / 1067	693	716	786	730	747	776	799	870	813	831
51 / 1295	48 / 1219	752	777	860	792	814	835	861	943	876	898
51 / 1295	54 / 1372	814	843	935	862	886	898	927	1018	945	970
51 / 1295	60 / 1524	907	938	1043	959	986	991	1022	1126	1043	1070
51 / 1295	66 / 1676	976	1009	1124	1032	1061	1059	1093	1208	1116	1145
51 / 1295	72 / 1829	1041	1078	1203	1103	1133	1124	1161	1286	1187	1217
51 / 1295	78 / 1981	1107	1147	1281	1174	1210	1190	1231	1364	1257	1293
51 / 1295	84 / 2134	1176	1221	1366	1250	1286	1260	1305	1450	1334	1370
57 / 1448	18 / 457	566	583	633	593	606	650	667	717	676	689
57 / 1448	24 / 610	650	672	739	683	702	733	755	822	767	785
57 / 1448	30 / 762	733	760	847	778	798	817	843	930	862	882
57 / 1448	36 / 914	814	846	950	867	893	898	929	1034	950	977
57 / 1448	42 / 1067	896	933	1053	957	986	979	1016	1137	1041	1070
57 / 1448	48 / 1219	974	1015	1153	1043	1079	1058	1099	1237	1126	1162
57 / 1448	54 / 1372	1059	1107	1261	1138	1176	1143	1190	1344	1221	1260
57 / 1448	60 / 1524	1172	1224	1397	1259	1302	1255	1307	1480	1342	1385
57 / 1448	66 / 1676	1291	1348	1538	1385	1435	1375	1431	1622	1469	1518
57 / 1448	72 / 1829	1407	1470	1676	1511	1563	1491	1553	1760	1595	1646
57 / 1448	78 / 1981	1527	1594	1818	1640	1695	1610	1677	1901	1724	1778
57 / 1448	84 / 2134	1645	1719	1959	1766	1828	1728	1803	2043	1849	1912

EZ compatible

J N S F G T

Floor Screen with Glass – Leg-Mounted – Two Users

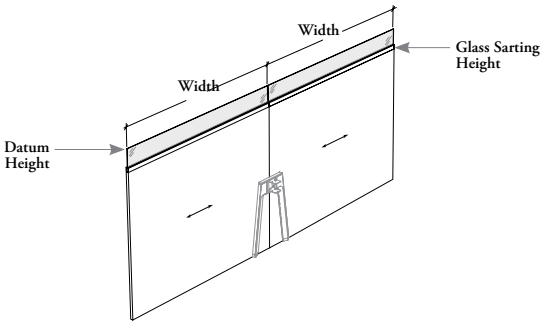

This screen attaches to side of a structural leg to provide double-sided space division.

WHAT'S INCLUDED
2 solid screen with glass, 1 cable pass-through ring (as specified), linking devices and caps, levelers and mounting hardware.

WHAT'S EXCLUDED
Structural Legs, EZ Structural Legs, Linking Strip for Glass Screen and Cable Pass-Through Cover.

NOTES
The solid panels are 1" thick and tempered glass is 1/4" (6 mm) thick.

Frost Finishes (FT or LB) are single-sided etched, Satin (FB) is etched on both sides.

Hardware Finish should be specified to match with the Structural Leg.

Cable Pass-Through Ring comes in a Platinum Coordinate.

PRODUCT OPTIONS

Datum Height	Glass Starting Height	Width	Corner Details	Cable Pass-Through
42, 51, 57	28, 29, 42	036, 048, 060, 072, 084, 096, 108, 120, 132, 144, 156, 168	**R** Radius **S** Standard	**N** No Pass-Through (Shown) **S** Standard-Height Pass-Through

SAMPLE ORDER CODE

JNSFGT 51	29	144	S	S

PRODUCT OPTIONS CONTINUED

Screen Finish	Frame Finish	Glass Finish	Hardware Finish
Source Laminate	Foundation Mica Accent	**Standard Glass:** **CL** Clear **FT** Frost **FB** Satin **Low Iron Glass:** **LA** Clear – Low Iron **LB** Frost – Low Iron	Foundation Mica Accent Coordinate Colors

SAMPLE ORDER CODE CONTINUED

XS	74	FT	74

See Pricing on the following page.

JNSFGT

Floor Screen with Glass – Leg-Mounted – Two Users (Continued)

DIMENSIONS INCHES / MM

PRICING

28" GLASS STARTING HEIGHT

H	W	STANDARD (S) Clear (CL)	Frost (FT)	Satin (FB)	Clear – Low Iron (LA)	Frost – Low Iron (LB)	RADIUS (R) Clear (CL)	Frost (FT)	Satin (FB)	Clear – Low Iron (LA)	Frost – Low Iron (LB)
42 / 1067	36 / 914	703	731	820	749	770	870	898	987	916	937
42 / 1067	48 / 1219	815	850	971	877	905	983	1017	1138	1044	1072
42 / 1067	60 / 1524	964	1010	1159	1041	1078	1131	1177	1326	1208	1245
42 / 1067	72 / 1829	1103	1157	1336	1192	1239	1270	1324	1503	1360	1406
42 / 1067	84 / 2134	1244	1307	1517	1349	1401	1411	1474	1684	1516	1568
42 / 1067	96 / 2438	1631	1701	1942	1754	1810	1798	1868	2109	1921	1977
42 / 1067	108 / 2743	1747	1828	2095	1882	1953	1914	1995	2262	2049	2120
42 / 1067	120 / 3048	1928	2021	2318	2081	2155	2095	2188	2485	2248	2322
42 / 1067	132 / 3353	2069	2169	2499	2234	2315	2236	2336	2666	2401	2482
42 / 1067	144 / 3658	2206	2313	2673	2385	2478	2373	2480	2840	2552	2645
42 / 1067	156 / 3962	2348	2466	2854	2540	2640	2515	2633	3021	2707	2807
42 / 1067	168 / 4267	2487	2615	3035	2698	2803	2654	2782	3202	2865	2970
51 / 1295	36 / 914	802	848	999	878	916	969	1015	1166	1045	1083
51 / 1295	48 / 1219	938	1000	1202	1042	1089	1105	1167	1369	1209	1256
51 / 1295	60 / 1524	1111	1188	1442	1238	1303	1278	1355	1609	1405	1470
51 / 1295	72 / 1829	1303	1393	1697	1453	1530	1470	1560	1864	1621	1697
51 / 1295	84 / 2134	1495	1602	1956	1673	1761	1662	1769	2123	1840	1928
51 / 1295	96 / 2438	1877	2000	2404	2083	2178	2044	2167	2571	2250	2346
51 / 1295	108 / 2743	2018	2155	2612	2248	2359	2185	2322	2779	2415	2526
51 / 1295	120 / 3048	2223	2376	2884	2475	2605	2390	2543	3051	2642	2772
51 / 1295	132 / 3353	2420	2587	3146	2700	2837	2587	2754	3313	2868	3004
51 / 1295	144 / 3658	2605	2786	3394	2907	3060	2772	2953	3561	3074	3227
51 / 1295	156 / 3962	2798	3000	3654	3130	3292	2965	3167	3821	3297	3459
51 / 1295	168 / 4267	2990	3204	3912	3345	3522	3158	3371	4079	3512	3689

29" GLASS STARTING HEIGHT

		STANDARD (S) Clear (CL)	Frost (FT)	Satin (FB)	Clear – Low Iron (LA)	Frost – Low Iron (LB)	RADIUS (R) Clear (CL)	Frost (FT)	Satin (FB)	Clear – Low Iron (LA)	Frost – Low Iron (LB)
42 / 1067	36 / 914	619	647	737	666	687	786	814	904	833	854
42 / 1067	48 / 1219	732	767	887	793	821	899	934	1054	960	988
42 / 1067	60 / 1524	880	927	1075	957	994	1047	1094	1242	1124	1161
42 / 1067	72 / 1829	1020	1073	1253	1109	1155	1187	1240	1420	1276	1322
42 / 1067	84 / 2134	1160	1224	1434	1266	1318	1327	1391	1601	1433	1485
42 / 1067	96 / 2438	1464	1534	1775	1587	1643	1631	1701	1942	1754	1810
42 / 1067	108 / 2743	1580	1661	1928	1714	1786	1747	1828	2095	1882	1953
42 / 1067	120 / 3048	1761	1854	2151	1914	1988	1928	2021	2318	2081	2155
42 / 1067	132 / 3353	1902	2002	2332	2067	2148	2069	2169	2499	2234	2315
42 / 1067	144 / 3658	2039	2146	2506	2218	2311	2206	2313	2673	2385	2478
42 / 1067	156 / 3962	2181	2299	2687	2373	2473	2348	2466	2854	2540	2640
42 / 1067	168 / 4267	2320	2448	2868	2531	2636	2487	2615	3035	2698	2803

Pricing is continued on the following page.

J N S F G T

Floor Screen with Glass – Leg-Mounted – Two Users (Continued)

DIMENSIONS
INCHES / MM

PRICING

29" GLASS STARTING HEIGHT (CONTINUED)

H	W	STANDARD (S) Clear (CL)	Frost (FT)	Satin (FB)	Clear – Low Iron (LA)	Frost – Low Iron (LB)	RADIUS (R) Clear (CL)	Frost (FT)	Satin (FB)	Clear – Low Iron (LA)	Frost – Low Iron (LB)
51 / 1295	36 / 914	718	764	915	795	833	885	931	1082	962	1000
51 / 1295	48 / 1219	855	916	1118	958	1006	1022	1083	1285	1125	1173
51 / 1295	60 / 1524	1028	1104	1358	1154	1219	1195	1271	1525	1321	1386
51 / 1295	72 / 1829	1219	1310	1614	1370	1447	1386	1477	1781	1537	1614
51 / 1295	84 / 2134	1412	1518	1872	1589	1677	1579	1685	2039	1756	1844
51 / 1295	96 / 2438	1710	1833	2236	1916	2011	1877	2000	2404	2083	2178
51 / 1295	108 / 2743	1851	1988	2445	2081	2192	2018	2155	2612	2248	2359
51 / 1295	120 / 3048	2056	2209	2717	2308	2438	2223	2376	2884	2475	2605
51 / 1295	132 / 3353	2253	2420	2979	2533	2670	2420	2587	3146	2700	2837
51 / 1295	144 / 3658	2438	2619	3227	2740	2893	2605	2786	3394	2907	3060
51 / 1295	156 / 3962	2631	2833	3487	2963	3125	2798	3000	3654	3130	3292
51 / 1295	168 / 4267	2823	3037	3744	3178	3355	2990	3204	3912	3345	3522

42" GLASS STARTING HEIGHT

		STANDARD (S) Clear (CL)	Frost (FT)	Satin (FB)	Clear – Low Iron (LA)	Frost – Low Iron (LB)	RADIUS (R) Clear (CL)	Frost (FT)	Satin (FB)	Clear – Low Iron (LA)	Frost – Low Iron (LB)
51 / 1295	36 / 914	632	652	713	664	680	799	819	880	831	847
51 / 1295	48 / 1219	752	777	860	792	814	919	944	1027	959	981
51 / 1295	60 / 1524	907	938	1043	959	986	1074	1105	1210	1126	1153
51 / 1295	72 / 1829	1041	1078	1203	1103	1133	1208	1245	1370	1270	1300
51 / 1295	84 / 2134	1176	1221	1366	1250	1286	1343	1389	1534	1418	1453
51 / 1295	96 / 2438	1503	1554	1719	1585	1629	1670	1721	1886	1752	1796
51 / 1295	108 / 2743	1629	1687	1870	1724	1772	1796	1854	2037	1891	1940
51 / 1295	120 / 3048	1814	1877	2086	1919	1972	1981	2044	2253	2086	2139
51 / 1295	132 / 3353	1951	2018	2248	2065	2123	2118	2185	2415	2232	2290
51 / 1295	144 / 3658	2081	2155	2406	2206	2267	2248	2322	2573	2373	2434
51 / 1295	156 / 3962	2213	2294	2561	2348	2420	2380	2462	2728	2515	2587
51 / 1295	168 / 4267	2352	2443	2733	2501	2573	2520	2610	2900	2668	2740
57 / 1448	36 / 914	814	846	950	867	893	981	1013	1117	1034	1060
57 / 1448	48 / 1219	974	1015	1153	1043	1079	1141	1182	1320	1210	1246
57 / 1448	60 / 1524	1172	1224	1397	1259	1302	1339	1391	1564	1426	1469
57 / 1448	72 / 1829	1407	1470	1676	1511	1563	1574	1637	1843	1679	1730
57 / 1448	84 / 2134	1645	1719	1959	1766	1828	1812	1886	2126	1933	1995
57 / 1448	96 / 2438	1949	2030	2306	2086	2158	2116	2197	2473	2253	2325
57 / 1448	108 / 2743	2118	2213	2522	2276	2352	2285	2380	2689	2443	2520
57 / 1448	120 / 3048	2343	2448	2793	2517	2603	2510	2615	2960	2684	2770
57 / 1448	132 / 3353	2582	2696	3076	2770	2870	2749	2863	3243	2937	3037
57 / 1448	144 / 3658	2814	2939	3352	3023	3125	2981	3106	3519	3190	3292
57 / 1448	156 / 3962	3053	3188	3635	3280	3390	3220	3355	3802	3448	3557
57 / 1448	168 / 4267	3290	3438	3918	3531	3656	3457	3605	4086	3698	3823

EZ compatible

JNSFOL

Floor Screen with Metal Tower – Open – Leg-Mounted – One User

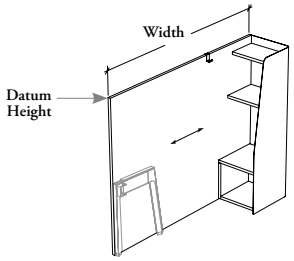

No Accessory (N)

This screen with metal tower attaches to the side of a structural leg and provide space division and storage area to store garments and other items in the workstation.

WHAT'S INCLUDED
1 solid screen with metal tower, 2 fixed shelves, 1 open storage, 1 hook, 1 cable pass-through ring (as specified), linking devices and caps (as specified), levelers and mounting hardware.

WHAT'S EXCLUDED
Structural Legs, EZ Structural Legs, Cable Pass-Through Cover, Sit and Slide Screens and Rare Earth Magnet Kit.

NOTES
The solid panel is 1" thick.

Leg-Mounting Hardware Finish should be specified to match with the Structural Leg.

Pass-Through ring comes in a Platinum Coordinate.

For Width Extension for Corner Applications details, refer to the Application Guide.

PRODUCT OPTIONS

Configuration	Datum Height	Width	Width Extension for Corner Application	Alignment Holes	Cable Pass-Through
L Left	51, 57	66, 72, 78, 84	**O** One Side Extended	**N** Without Alignment Holes (Shown)	**N** No Pass-Through (Shown)
R Right (Shown)			**S** Standard Width	**W** With Aligment Holes	**S** Standard-Height Pass-Through

SAMPLE ORDER CODE

JNSFOL L	51	72	S	N	S

PRODUCT OPTIONS CONTINUED

Accessory	Screen Finish	Metal Tower Finish	Hook Finish	Leg-Mounting Hardware Finish
N No Accessory	Source Laminate	Foundation	Foundation	Foundation
		Mica	Mica	Mica
		Accent	Accent	Accent

SAMPLE ORDER CODE CONTINUED

N	XS	74	74	74

See Pricing on the following page.

JNSFOL

Floor Screen with Metal – Open – Leg-Mounted – One User (Continued)

DIMENSIONS INCHES / MM		PRICING
H	W	
51 / 1295	66 / 1676	1988
51 / 1295	72 / 1829	2033
51 / 1295	78 / 1981	2075
51 / 1295	84 / 2134	2117
57 / 1448	66 / 1676	2108
57 / 1448	72 / 1829	2158
57 / 1448	78 / 1981	2204
57 / 1448	84 / 2134	2250

EZ compatible

JNSFOT

Floor Screen with Metal Tower – Open – Leg-Mounted – Two Users

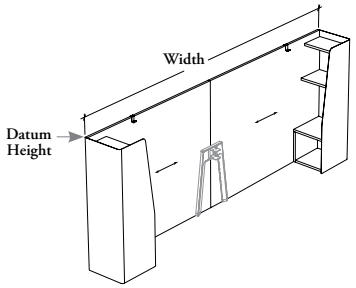

No Accessory (N)

This screen with metal tower attaches to the side of a structural leg and provide space division and storage area to store garments and other items in the workstation.

WHAT'S INCLUDED

2 solid screens with metal towers, 4 fixed shelves, 2 hooks, 2 open storage, 1 cable pass-through ring (as specified), linking devices and caps (as specified), levelers and mounting hardware.

WHAT'S EXCLUDED

Structural Legs, EZ Structural Legs, Cable Pass-Through Cover, Sit and Slide Screens and Rare Earth Magnet Kit.

NOTES

The solid panels are 1" thick.

Leg-Mounting Hardware Finish should be specified to match with the Structural Leg.

Pass-Through ring comes in a Platinum Coordinate.

PRODUCT OPTIONS

Datum Height	Width	Cable Pass-Through	Accessory	Screen Finish	Metal Tower Finish	Hook Finish	Leg-Mounting Hardware Finish
51, 57	132, 144, 156, 168	**N** No Pass-Through (Shown) **S** Standard-Height Pass-Through	**N** No Accessory	Source Laminate	Foundation Accent Mica	Foundation Accent Mica	Foundation Accent Mica

SAMPLE ORDER CODE

JNSFOT 51	132	N	N	XS	74	74	74

DIMENSIONS INCHES / MM

H	W	PRICING
51 / 1295	132 / 3353	3976
51 / 1295	144 / 3658	4067
51 / 1295	156 / 3962	4150
51 / 1295	168 / 4267	4234
57 / 1448	132 / 3353	4215
57 / 1448	144 / 3658	4315
57 / 1448	156 / 3962	4408
57 / 1448	168 / 4267	4501

EZ compatible

JNSFDL

Floor Screen with Metal Tower – One Drawer – Leg-Mounted – One User

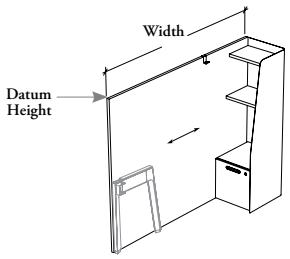

This screen with metal tower attaches to the side of a structural leg and provide space division and storage area to store garments and other items combined with optional filling or recycling/waste bins section.

WHAT'S INCLUDED
1 solid screen with metal tower, 2 fixed shelves, 1 hook, 1 file drawer or recycling/waste bin (as specified), 1 12" hanging file bar (if applicable), 1 cable pass-through ring (as specified), 1 pull (as specified), linking devices and caps (as specified), levelers and mounting hardware.

WHAT'S EXCLUDED
Structural Legs, EZ Structural Legs, Cable Pass-Through Cover, Sit and Slide Screens and Rare Earth Magnet Kit.

NOTES
The solid panel is 1" thick.

Leg-Mounting Hardware Finish should be specified to match with the Structural Leg.

Pass-Through ring comes in a Platinum Coordinate.

When Recycling/Waste Bin (R) option is specified, the Drawer Key Style is **not** available.

For Width Extension for Corner Applications details, refer to the Application Guide.

PRODUCT OPTIONS

Front Style	Configuration	Datum Height	Width	Width Extension for Corner Application	Alignment Holes	Cable Pass-Through
T Solid with Pull	**L** Left **R** Right (Shown)	51, 57	66, 72, 78, 84	**O** One Side Extended **S** Standard Width	**N** Without Alignment Holes (Shown) **W** With Aligment Holes	**N** No Pass-Through (Shown) **S** Standard-Height Pass-Through

SAMPLE ORDER CODE

JNSFDL T	L	51	72	S	N	S

PRODUCT OPTIONS CONTINUED

Storage Configuration	Pull Style	Pull and Hook Finish	Screen Finish	Metal Tower Finish	Leg-Mounting Hardware Finish	Drawer Key Style (If Applicable)
F File Drawer **R** Recycling/Waste Bin	**C** Cityline Recessed	Foundation Accent Mica	Source Laminate	Foundation Mica Accent	Foundation Mica Accent	**K** Keyed Alike **R** Keyed Randomly **N** No Lock

SAMPLE ORDER CODE CONTINUED

F	C	74	XS	74	74	K

See Pricing on the following page.

JNSFDL

Floor Screen with Metal Tower – One Drawer – Leg-Mounted – One User (Continued)

DIMENSIONS INCHES / MM		PRICING	
		SOURCE LAMINATE SCREEN	
H	W	RECYCLING/WASTE BIN (R)	FILE DRAWER (F)
51 / 1295	66 / 1676	2290	2314
51 / 1295	72 / 1829	2335	2359
51 / 1295	78 / 1981	2377	2401
51 / 1295	84 / 2134	2419	2443
57 / 1448	66 / 1676	2375	2399
57 / 1448	72 / 1829	2424	2449
57 / 1448	78 / 1981	2471	2495
57 / 1448	84 / 2134	2517	2542

EZ compatible

J N S F D T

Floor Screen with Metal Tower – One Drawer – Leg-Mounted – Two Users

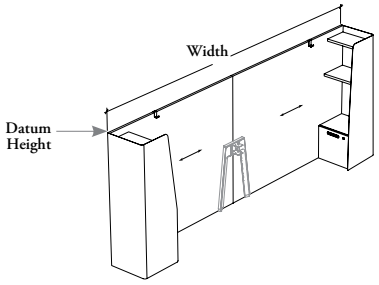

This screen with metal tower attaches to the side of a structural leg and provide space division and storage area to store garments and other items combined with optional filling or recycling/waste bins section.

WHAT'S INCLUDED
2 solid screen with metal towers, 4 fixed shelves, 2 hooks, 2 file drawers or recycling/waste bins (as specified), 2 12" hanging file bars (if applicable), 1 cable pass-through ring (as specified), 2 pulls (as specified), linking devices and caps (as specified), levelers and mounting hardware.

WHAT'S EXCLUDED
Structural Legs, EZ Structural Legs, Cable Pass-Through Cover, Sit and Slide Screens and Rare Earth Magnet Kit.

NOTES
The solid panel is 1" thick.

Leg-Mounting Hardware Finish should be specified to match with the Structural Leg.

Pass-Through ring comes in a Platinum Coordinate.

When Recycling/Waste Bin (R) option is specified, the Drawer Key Style is **not** available.

PRODUCT OPTIONS

Front Style	Datum Height	Width	Cable Pass-Through	Storage Configuration	Pull Style
T Solid with Pull	51, 57	132, 144, 156, 168	**N** No Pass-Through (Shown) **S** Standard-Height Pass-Through	**F** File Drawer **R** Recycling/Waste Bin	**C** Cityline Recessed

SAMPLE ORDER CODE

JNSFDT T	51	132	S	R	C

PRODUCT OPTIONS CONTINUED

Pull and Hook Finish	Screen Finish	Metal Tower Finish	Leg-Mounting Hardware Finish	Drawer Key Style (If Applicable)
Foundation	Source Laminate	Foundation	Foundation	**K** Keyed Alike
Accent		Mica	Mica	**R** Keyed Randomly
Mica		Accent	Accent	**N** No Lock

SAMPLE ORDER CODE CONTINUED

74	XS	74	74	

See Pricing on the following page.

J N S F D T

Floor Screen with Metal – One Drawer – Leg-Mounted – Two Users (Continued)

DIMENSIONS INCHES / MM		PRICING	
		SOURCE LAMINATE SCREEN	
H	W	RECYCLING/WASTE BIN (R)	FILE DRAWER (F)
51 / 1295	132 / 3353	4580	4628
51 / 1295	144 / 3658	4670	4719
51 / 1295	156 / 3962	4754	4802
51 / 1295	168 / 4267	4837	4886
57 / 1448	132 / 3353	4749	4798
57 / 1448	144 / 3658	4849	4898
57 / 1448	156 / 3962	4942	4990
57 / 1448	168 / 4267	5034	5083

EZ compatible

JNSFTL

Floor Screen with Metal Tower – Two Drawers – Leg-Mounted – One User

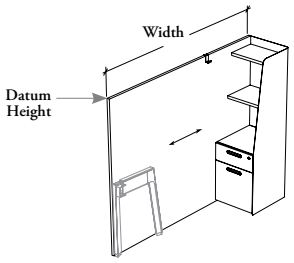

This screen with metal tower attaches to the side of a structural leg and provide space division and storage area to store garments and other items combined with optional filling or recycling/waste bins section.

WHAT'S INCLUDED
1 solid screen with metal tower, 2 fixed shelves, 1 hook, 1 box drawer, 1 lower file drawer or 1 lower recycling/waste bin (as specified), 1 pencil tray, 1 drawer divider,1 12" hanging file bars (if applicable), 1 cable pass-through ring (as specified), 2 pulls (as specified), linking devices and caps (as specified), levelers and mounting hardware.

WHAT'S EXCLUDED
Structural Legs, EZ Structural Legs, Cable Pass-Through Cover, Sit and Slide Screens and Rare Earth Magnet Kit.

NOTES
The solid panel is 1" thick.

When Recycling/WasteBin (R) option is specified, only Box Drawer is lockable.

Leg-Mounting Hardware Finish should be specified to match with the Structural Leg.

Pass-Through ring comes in a Platinum Coordinate.

For Width Extension for Corner Applications details, refer to the Application Guide.

PRODUCT OPTIONS

Front Style	Configuration	Datum Height	Width	Width Extension for Corner Application	Alignment Holes	Cable Pass-Through
T Solid with Pull	**L** Left	51, 57	66, 72, 78, 84	**O** One Side Extended	**N** Without Alignment Holes (Shown)	**N** No Pass-Through (Shown)
	R Right (Shown)			**S** Standard Width	**W** With Aligment Holes	**S** Standard-Height Pass-Through

SAMPLE ORDER CODE

JNSFTL T	L	51	78	O	N	N

PRODUCT OPTIONS CONTINUED

Lower Storage Configuration	Pull Style	Pull and Hook Finish	Screen Finish	Metal Tower Finish	Leg-Mounting Hardware Finish	Drawer Key Style
F File Drawer	**C** Cityline Recessed	Foundation	Source Laminate	Foundation	Foundation	**K** Keyed Alike
R Recycling/Waste Bin		Accent		Mica	Mica	**R** Keyed Randomly
		Mica		Accent	Accent	**N** No Lock

SAMPLE ORDER CODE CONTINUED

F	C	74	XS	74	74	K

See Pricing on the following page.

JNSFTL

Floor Screen with Metal – Two Drawers – Leg-Mounted – One User (Continued)

DIMENSIONS INCHES / MM		PRICING	
		SOURCE LAMINATE SCREEN	
H	W	RECYCLING/WASTE BIN (R)	FILE DRAWER (F)
51 / 1295	66 / 1676	2420	2457
51 / 1295	72 / 1829	2465	2502
51 / 1295	78 / 1981	2507	2544
51 / 1295	84 / 2134	2549	2586
57 / 1448	66 / 1676	2504	2542
57 / 1448	72 / 1829	2554	2591
57 / 1448	78 / 1981	2601	2638
57 / 1448	84 / 2134	2647	2684

EZ compatible

J N S F T T

Floor Screen with Metal Tower – Two Drawers – Leg-Mounted – Two Users

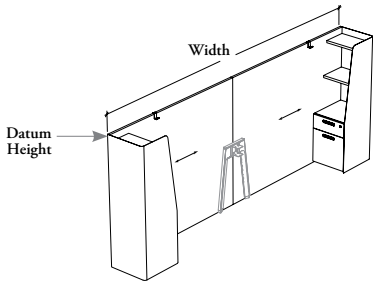

This screen with metal tower attaches to the side of a structural leg and provide space division and storage area to store garments and other items combined with optional filling or recycling/waste bins section.

WHAT'S INCLUDED
2 solid screen with metal towers, 4 fixed shelves, 2 hooks, 2 box drawers, 2 lower file drawers or 2 lower recycling/waste bins (as specified), 2 pencil trays, 2 drawer dividers, 2 12" hanging file bars (if applicable), 1 cable pass-through ring (as specified), 4 pulls (as specified), linking devices and caps (as specified), levelers and mounting hardware.

WHAT'S EXCLUDED
Structural Legs, EZ Structural Legs, Cable Pass-Through Cover, Sit and Slide Screens and Rare Earth Magnet Kit.

NOTES
The solid panels are 1" thick.

When Recycling/Waste Bins (R) option is specified, only Box Drawers are lockable.

Leg-Mounting Hardware Finish should be specified to match with the Structural Leg.

Pass-Through ring comes in a Platinum Coordinate.

PRODUCT OPTIONS

Front Style	Datum Height	Width	Cable Pass-Through	Lower Storage Configuration	Pull Style
T Solid with Pull	51, 57	132, 144, 156, 168	**N** No Pass-Through (Shown) **S** Standard-Height Pass-Through	**F** File Drawer **R** Recycling/Waste Bin	**C** Cityline Recessed

SAMPLE ORDER CODE

JNSFTT T	51	132	N	F	C

PRODUCT OPTIONS CONTINUED

Pull and Hook Finish	Screen Finish	Metal Tower Finish	Leg-Mounting Hardware Finish	Drawer Key Style
Foundation	Source Laminate	Foundation	Foundation	**K** Keyed Alike
Accent		Mica	Mica	**R** Keyed Randomly
Mica		Accent	Accent	**N** No Lock

SAMPLE ORDER CODE CONTINUED

74	XS	74	74	R

See Pricing on the following page.

JNSFTT

Floor Screen with Metal – Two Drawers – Leg-Mounted – Two Users (Continued)

DIMENSIONS INCHES / MM		PRICING	
		SOURCE LAMINATE SCREEN	
H	W	RECYCLING/WASTE BIN (R)	FILE DRAWER (F)
51 / 1295	132 / 3353	4840	4914
51 / 1295	144 / 3658	4930	5004
51 / 1295	156 / 3962	5014	5088
51 / 1295	168 / 4267	5097	5171
57 / 1448	132 / 3353	5009	5083
57 / 1448	144 / 3658	5109	5183
57 / 1448	156 / 3962	5201	5276
57 / 1448	168 / 4267	5294	5368

height-adjustable table screens

height-adjustable table screens product map

J N S A S H Solid Add-On Screen – Height-Adjustable Table Mounted

Page 1158

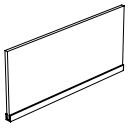

J N S A G H Glass Add-On Screen – Height-Adjustable Table Mounted

Page 1160

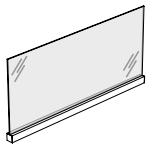

J N S A F H Fabric Add-On Screen – Height-Adjustable Table Mounted

Page 1162

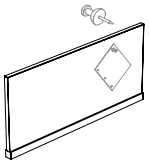

J N S A E H Felt Add-On Screen – Height-Adjustable Table Mounted

Page 1164

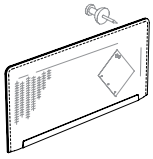

J N S W G H Glass Edge Screen – Height-Adjustable Table Mounted

Page 1166

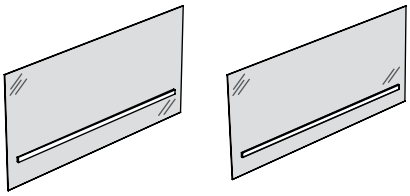

J N S E S H Solid Elevated Screen – Height-Adjustable Table Mounted

Page 1168

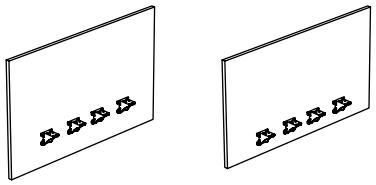

J N S M L H Metal Lateral Elevated Screen – Height-Adjustable Table Mounted

Page 1170

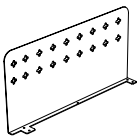

J N S M E H Metal Back Elevated Screen – Height-Adjustable Table Mounted

Page 1171

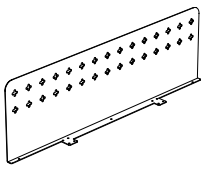

height-adjustable table screens product map

J N S M C H Metal Corner Elevated Screen – Height-Adjustable Table Mounted

Page 1172

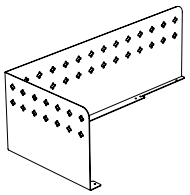

J N S X L H Infinity Lateral Elevated Screen – Height-Adjustable Table Mounted

Page 1174

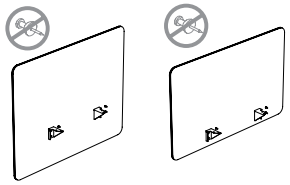

J N S X E H Infinity Back Elevated Screen – Height-Adjustable Table Mounted

Page 1176

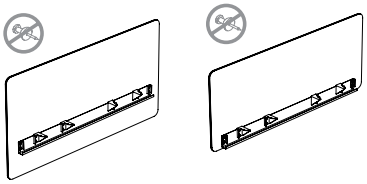

J N S X C H Infinity Corner Elevated Screen – Height-Adjustable Table Mounted

Page 1178

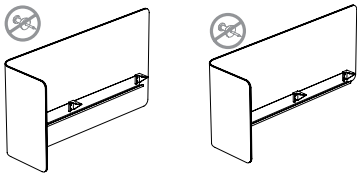

J N S E F H Fabric Elevated Screen – Height-Adjustable Table Mounted

Page 1180

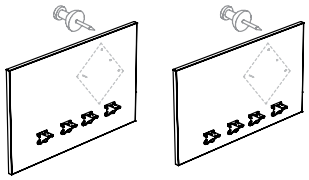

J N S E E H Felt Elevated Screen – Height-Adjustable Table Mounted

Page 1182

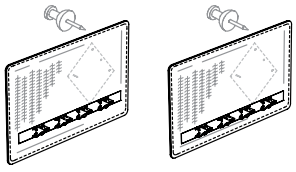

J N S E L E H Felt End Screen – Height-Adjustable Table Mounted

Page 1184

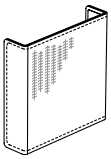

JNSASH

Solid Add-On Screen – Height-Adjustable Table Mounted

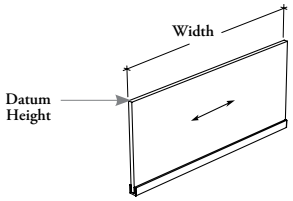

This screen mounts directly on a hiSpace Worksurface with Quick Connect Kit or Worksurface for Navigate Base to create privacy and space division at various heights in a workstation.

WHAT'S INCLUDED
1 solid screen and mounting hardware.

WHAT'S EXCLUDED
hiSpace Worksurfaces with Quick Connect Kit or Worksurfaces for Navigate Base.

NOTES
The solid panel is 1" thick.

When One Side Full Screen (F) option is specified, only 23" and 29" widths are available.

PRODUCT OPTIONS

Datum Height	Width	Width Reduction for Lateral Application	Corner Detail	Alignment Holes	Screen Finish	Mounting Hardware Finish
42, 51	23, 29, 46, 49, 52, 55, 58, 61, 64, 67, 70, 73, 76, 79, 82	**F** One Side Full Screen **S** Standard Width	**S** Standard	**N** Without Alignment Holes	Source Laminate	Foundation Mica Accent

SAMPLE ORDER CODE

JNSASH 51	64	S	S	N	XS	74

DIMENSIONS INCHES / MM

H	W	PRICING
42 / 1067	23 / 584	300
42 / 1067	29 / 737	321
42 / 1067	46 / 1168	372
42 / 1067	49 / 1245	382
42 / 1067	52 / 1321	401
42 / 1067	55 / 1397	406
42 / 1067	58 / 1473	412
42 / 1067	61 / 1549	416
42 / 1067	64 / 1626	422
42 / 1067	67 / 1702	435
42 / 1067	70 / 1778	451
42 / 1067	73 / 1854	461
42 / 1067	76 / 1930	465
42 / 1067	79 / 2007	472
42 / 1067	82 / 2083	477

Pricing is continued on the following page.

JNSASH

Solid Add-On Screen – Height-Adjustable Table Mounted (Continued)

DIMENSIONS INCHES / MM		PRICING
H	W	
51 / 1295	23 / 584	328
51 / 1295	29 / 737	353
51 / 1295	46 / 1168	418
51 / 1295	49 / 1245	434
51 / 1295	52 / 1321	454
51 / 1295	55 / 1397	464
51 / 1295	58 / 1473	473
51 / 1295	61 / 1549	483
51 / 1295	64 / 1626	493
51 / 1295	67 / 1702	506
51 / 1295	70 / 1778	525
51 / 1295	73 / 1854	532
51 / 1295	76 / 1930	542
51 / 1295	79 / 2007	551
51 / 1295	82 / 2083	559

J N S A G H

Glass Add-On Screen – Height-Adjustable Table Mounted

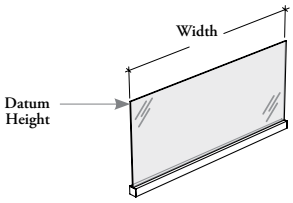

This screen mounts directly on a hiSpace Worksurfaces with Quick Connect Kit or Worksurface for Navigate Base to create privacy and space division at various heights in a workstation.

WHAT'S INCLUDED
1 glass screen and mounting hardware.

WHAT'S EXCLUDED
hiSpace Worksurfaces with Quick Connect Kit or Worksurfaces for Navigate Base.

NOTES
The tempered glass is 1/4" (6 mm) thick.

Low Iron Glass Finishes (LA or LB) reduce the greenish render of standard glass. It must be used to match Glass Elevated Screen.

Frost Finishes (FT or LB) are single-sided etched, Satin (FB) is etched on both sides.

When One Side Full Screen (F) option is specified, only 23" and 29" widths are available.

PRODUCT OPTIONS

Datum Height	Width	Width Reduction for Lateral Application	Corner Detail	Glass Finish	Mounting Hardware Finish
42, 51	23, 29, 46, 49, 52, 55, 58, 61, 64, 67, 70, 73, 76, 79, 82	**F** One Side Full Screen **S** Standard Width	**S** Standard	**Standard Glass:** **CL** Clear **FT** Frost **FB** Satin **Low Iron Glass:** **LA** Clear – Low Iron **LB** Frost – Low Iron	Foundation Mica Accent

SAMPLE ORDER CODE

JNSAGH 51	64	S	S	FT	74

DIMENSIONS
INCHES / MM

H	W
42 / 1067	23 / 584
42 / 1067	29 / 737
42 / 1067	46 / 1168
42 / 1067	49 / 1245
42 / 1067	52 / 1321
42 / 1067	55 / 1397
42 / 1067	58 / 1473
42 / 1067	61 / 1549
42 / 1067	64 / 1626
42 / 1067	67 / 1702
42 / 1067	70 / 1778
42 / 1067	73 / 1854
42 / 1067	76 / 1930
42 / 1067	79 / 2007
42 / 1067	82 / 2083

PRICING

Clear (CL)	Frost (FT)	Satin (FB)	Clear – Low Iron (LA)	Frost – Low Iron (LB)
285	302	367	318	331
303	327	407	345	362
389	426	546	450	479
405	441	567	467	499
421	462	596	491	524
429	470	615	500	535
436	479	630	509	550
441	488	647	521	560
448	498	665	531	573
467	517	691	553	595
501	556	737	590	639
520	575	764	614	660
527	585	782	624	673
532	593	798	636	686
538	602	817	646	699

Pricing is continued on the following page.

JNSAGH

Glass Add-On Screen – Height-Adjustable Table Mounted (Continued)

DIMENSIONS INCHES / MM		PRICING				
H	W	Clear (CL)	Frost (FT)	Satin (FB)	Clear – Low Iron (LA)	Frost – Low Iron (LB)
51 / 1295	23 / 584	316	347	451	369	394
51 / 1295	29 / 737	340	379	509	407	440
51 / 1295	46 / 1168	443	502	706	544	593
51 / 1295	49 / 1245	461	523	738	566	619
51 / 1295	52 / 1321	480	550	776	594	652
51 / 1295	55 / 1397	492	563	803	612	673
51 / 1295	58 / 1473	500	577	832	626	691
51 / 1295	61 / 1549	509	589	858	645	711
51 / 1295	64 / 1626	522	604	885	660	732
51 / 1295	67 / 1702	539	626	922	688	761
51 / 1295	70 / 1778	580	670	977	733	809
51 / 1295	73 / 1854	601	697	1017	761	841
51 / 1295	76 / 1930	611	709	1043	776	860
51 / 1295	79 / 2007	619	724	1071	793	880
51 / 1295	82 / 2083	629	737	1097	811	900

J N S A F H

Fabric Add-On Screen – Height-Adjustable Table Mounted

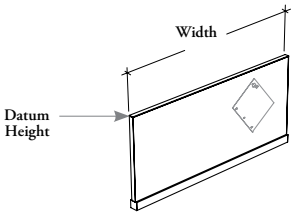

This screen mounts directly on a hiSpace Worksurfaces with Quick Connect Kit or Worksurface for Navigate Base to add tackable surface, create privacy and space division at various heights in a workstation.

WHAT'S INCLUDED
1 fabric screen and mounting hardware.

WHAT'S EXCLUDED
hiSpace Worksurfaces with Quick Connect Kit or Worksurfaces for Navigate Base.

NOTES
This fabric screen has the same fabric on both sides.

When One Side Full Screen (F) option is specified, only 23" and 29" widths are available.

PRODUCT OPTIONS

Datum Height	Width	Width Reduction for Lateral Application	Screen Finish	Frame and Hardware Finish
42, 51	23, 29, 46, 49, 52, 55, 58, 61, 64, 67, 70, 73, 76, 79, 82	**F** One Side Full Screen **S** Standard Width	Fabric	Foundation Mica Accent

SAMPLE ORDER CODE

JNSAFH 51	49	S	T540	74

DIMENSIONS INCHES / MM

H	W
42 / 1067	23 / 584
42 / 1067	29 / 737
42 / 1067	46 / 1168
42 / 1067	49 / 1245
42 / 1067	52 / 1321
42 / 1067	55 / 1397
42 / 1067	58 / 1473
42 / 1067	61 / 1549
42 / 1067	64 / 1626
42 / 1067	67 / 1702
42 / 1067	70 / 1778
42 / 1067	73 / 1854
42 / 1067	76 / 1930
42 / 1067	79 / 2007
42 / 1067	82 / 2083

PRICING

Gr. A/COM	Gr. 1	Gr. 2	Gr. 3	Gr. 4	Gr. 5	Gr. 6	Gr. 7
506	517	538	556	572	589	604	618
523	532	561	577	597	621	636	654
610	626	668	689	720	749	775	799
631	651	694	717	749	783	809	835
661	682	724	753	789	822	849	876
680	703	746	775	813	849	876	906
698	723	768	798	835	873	905	935
712	735	786	817	857	897	927	959
717	741	793	826	868	911	943	976
728	756	806	841	884	926	964	996
742	771	826	861	907	951	986	1025
754	782	838	878	923	970	1006	1044
769	799	860	899	947	996	1035	1074
789	820	880	921	972	1023	1059	1102
806	839	901	944	998	1049	1089	1131

Pricing is continued on the following page.

JNSAFH

Fabric Add-On Screen – Height-Adjustable Table Mounted (Continued)

DIMENSIONS INCHES / MM		PRICING							
H	W	Gr. A/COM	Gr. 1	Gr. 2	Gr. 3	Gr. 4	Gr. 5	Gr. 6	Gr. 7
51 / 1295	23 / 584	530	546	579	601	626	653	672	695
51 / 1295	29 / 737	556	572	611	636	669	701	724	749
51 / 1295	46 / 1168	668	694	747	788	831	876	912	947
51 / 1295	49 / 1245	695	724	783	822	871	916	954	994
51 / 1295	52 / 1321	728	761	821	861	913	964	1002	1044
51 / 1295	55 / 1397	748	783	848	892	944	998	1039	1083
51 / 1295	58 / 1473	773	807	876	921	977	1031	1076	1122
51 / 1295	61 / 1549	792	827	899	945	1005	1063	1109	1155
51 / 1295	64 / 1626	800	839	914	964	1024	1085	1133	1181
51 / 1295	67 / 1702	817	855	933	984	1049	1110	1161	1212
51 / 1295	70 / 1778	834	878	958	1010	1078	1144	1196	1249
51 / 1295	73 / 1854	849	893	977	1030	1101	1169	1224	1279
51 / 1295	76 / 1930	872	918	1003	1059	1131	1204	1262	1318
51 / 1295	79 / 2007	893	941	1030	1090	1167	1240	1298	1357
51 / 1295	82 / 2083	916	966	1058	1121	1197	1275	1334	1397

J N S A E H

Felt Add-On Screen – Height-Adjustable Table Mounted

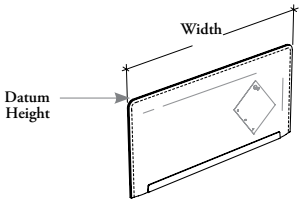

This screen mounts directly on top of a hiSpace Worksurfaces with Quick Connect Kit or Worksurface for Navigate Base to add acoustical and tackable surface, create privacy and space division at various heights in a workstation.

WHAT'S INCLUDED
1 felt screen and mounting hardware.

WHAT'S EXCLUDED
hiSpace Worksurfaces with Quick Connect Kit or Worksurfaces for Navigate Base.

NOTES
When One Side Full Screen (F) option is specified, only 23" and 29" widths are available.

PRODUCT OPTIONS

Datum Height	Width	Width Reduction for Lateral Application	Corner Detail	Felt Finish	Stitches Finish	Mounting Hardware Finish
42, 51	23, 29, 46, 49, 52, 55, 58, 61, 64, 67, 70, 73, 76, 79, 82	**F** One Side Full Screen **S** Standard Width	**R** Radius	Loft	**C** Carbon Coordinate **E** Shale Coordinate **G** Carrara Coordinate **M** Umber Coordinate	Foundation Mica Accent

SAMPLE ORDER CODE

JNSAEH 51	49	S	R	RB11	C	74

DIMENSIONS
INCHES / MM

H	W	PRICING
42 / 1067	23 / 584	324
42 / 1067	29 / 737	363
42 / 1067	46 / 1168	492
42 / 1067	49 / 1245	517
42 / 1067	52 / 1321	550
42 / 1067	55 / 1397	568
42 / 1067	58 / 1473	590
42 / 1067	61 / 1549	611
42 / 1067	64 / 1626	631
42 / 1067	67 / 1702	658
42 / 1067	70 / 1778	689
42 / 1067	73 / 1854	709
42 / 1067	76 / 1930	730
42 / 1067	79 / 2007	749
42 / 1067	82 / 2083	770

Pricing is continued on the following page.

JNSAEH

Felt Add-On Screen – Height-Adjustable Table Mounted (Continued)

DIMENSIONS INCHES / MM		PRICING
H	W	
51 / 1295	23 / 584	416
51 / 1295	29 / 737	479
51 / 1295	46 / 1168	669
51 / 1295	49 / 1245	706
51 / 1295	52 / 1321	749
51 / 1295	55 / 1397	783
51 / 1295	58 / 1473	814
51 / 1295	61 / 1549	847
51 / 1295	64 / 1626	878
51 / 1295	67 / 1702	916
51 / 1295	70 / 1778	960
51 / 1295	73 / 1854	992
51 / 1295	76 / 1930	1023
51 / 1295	79 / 2007	1056
51 / 1295	82 / 2083	1088

J N S W G H

Glass Edge Screen – Height-Adjustable Table Mounted

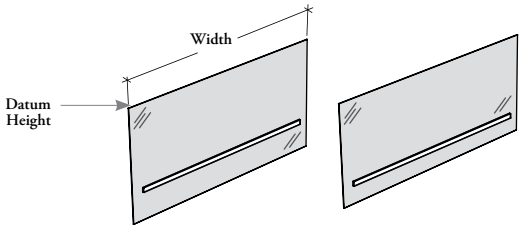

18" from Floor (18) **22" from Floor (22)**

This screen mounts to the hiSpace Worksurfaces with Quick Connect Kit or Worksurfaces for Navigate Base creating casual privacy and physical separation.

WHAT'S INCLUDED
1 glass edge screen and mounting hardware.

WHAT'S EXCLUDED
hiSpace Worksurfaces with Quick Connect Kit or Worksurfaces for Navigate Base.

NOTES
The tempered glass is 1/4" (6 mm) thick.

Low Iron Glass Finishes (LB) reduce the greenish render of standard glass. It must be used to match Glass Elevated Screen.

Frost Finish (FT) is single-sided etched.

PRODUCT OPTIONS

Modesty Base Height	Datum Height	Width	Glass Finish	Hardware Finish
18 18" from Floor **22** 22" from Floor	42	23, 29, 46, 49, 52, 55, 58, 61, 64, 67, 70, 73, 76, 79, 82	**Standard Glass:** **FT** Frost **Low Iron Glass:** **LB** Frost – Low Iron	Foundation Mica Accent

SAMPLE ORDER CODE

JNSWGH 22	42	64	LB	74

DIMENSIONS
INCHES / MM

H	W
42 / 1067	23 / 584
42 / 1067	29 / 737
42 / 1067	46 / 1168
42 / 1067	49 / 1245
42 / 1067	52 / 1321
42 / 1067	55 / 1397
42 / 1067	58 / 1473
42 / 1067	61 / 1549
42 / 1067	64 / 1626
42 / 1067	67 / 1702
42 / 1067	70 / 1778
42 / 1067	73 / 1854
42 / 1067	76 / 1930
42 / 1067	79 / 2007
42 / 1067	82 / 2083

PRICING

22" FROM FLOOR (22)		18" FROM FLOOR (18)	
Frost (FT)	Frost – Low Iron (LB)	Frost (FT)	Frost – Low Iron (LB)
336	387	369	419
413	476	449	513
618	703	669	764
654	742	709	811
695	789	749	857
732	829	791	905
769	877	831	952
809	921	873	1001
849	967	915	1050
887	1013	958	1099
927	1059	1000	1147
967	1105	1042	1196
1006	1151	1085	1245
1046	1197	1126	1293
1086	1244	1168	1342

J N S E S H

Solid Elevated Screen – Height-Adjustable Table Mounted

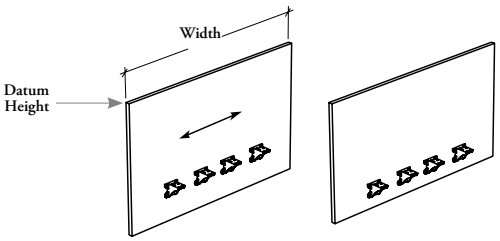

18" from Floor (18) 22" from Floor (22)

This screen mounts directly to the hiSpace Worksurfaces with Quick Connect Kit or Worksurfaces for Navigate Base to create privacy and physical separation between workstation and the corridor.

WHAT'S INCLUDED
1 solid screen, linking devices and caps (as specified) and mounting hardware.

WHAT'S EXCLUDED
hiSpace Worksurfaces with Quick Connect Kit or Worksurfaces for Navigate Base.

NOTES
The solid panel is 1" thick.

For Width Extension for Corner Applications details, refer to the Application Guide.

PRODUCT OPTIONS

Modesty Base Height	Datum Height	Width	Width Extension for Corner Application	Corner Detail	Alignment Holes	Screen Finish
18 18" from Floor **22** 22" from Floor	42, 51	23, 29, 46, 49, 52, 55, 58, 61, 64, 67, 70, 73, 76, 79, 82	**L** One Side – Left **R** One Side – Right **S** Standard Width	**S** Standard	**N** Without Alignment Holes **W** With Alignment Holes (Shown)	Source Laminate

SAMPLE ORDER CODE

JNSESH 22	51	58	S	S	N	XS

DIMENSIONS
INCHES / MM

PRICING

H	W	22" FROM FLOOR (22) ONE SIDE LEFT OR RIGHT (L or R)	22" FROM FLOOR (22) STANDARD WIDTH (S)	18" FROM FLOOR (18) ONE SIDE LEFT OR RIGHT (L or R)	18" FROM FLOOR (18) STANDARD WIDTH (S)
42 / 1067	23 / 584	267	267	278	278
42 / 1067	29 / 737	285	285	298	298
42 / 1067	46 / 1168	n/a	327	n/a	349
42 / 1067	49 / 1245	n/a	340	n/a	361
42 / 1067	52 / 1321	n/a	355	n/a	379
42 / 1067	55 / 1397	n/a	375	n/a	397
42 / 1067	58 / 1473	n/a	387	n/a	413
42 / 1067	61 / 1549	n/a	401	n/a	428
42 / 1067	64 / 1626	n/a	409	n/a	437
42 / 1067	67 / 1702	n/a	416	n/a	445
42 / 1067	70 / 1778	n/a	422	n/a	455
42 / 1067	73 / 1854	n/a	436	n/a	467
42 / 1067	76 / 1930	n/a	440	n/a	473
42 / 1067	79 / 2007	n/a	445	n/a	480
42 / 1067	82 / 2083	n/a	456	n/a	493

Pricing is continued on the following page.

JNSESH

Solid Elevated Screen – Height-Adjustable Table Mounted (Continued)

DIMENSIONS INCHES / MM		PRICING			
		22" FROM FLOOR (22)		18" FROM FLOOR (18)	
H	W	ONE SIDE LEFT OR RIGHT (L or R)	STANDARD WIDTH (S)	ONE SIDE LEFT OR RIGHT (L or R)	STANDARD WIDTH (S)
51 / 1295	23 / 584	295	295	305	305
51 / 1295	29 / 737	318	318	331	331
51 / 1295	46 / 1168	n/a	376	n/a	396
51 / 1295	49 / 1245	n/a	389	n/a	412
51 / 1295	52 / 1321	n/a	408	n/a	433
51 / 1295	55 / 1397	n/a	429	n/a	451
51 / 1295	58 / 1473	n/a	447	n/a	472
51 / 1295	61 / 1549	n/a	464	n/a	492
51 / 1295	64 / 1626	n/a	473	n/a	502
51 / 1295	67 / 1702	n/a	485	n/a	514
51 / 1295	70 / 1778	n/a	495	n/a	527
51 / 1295	73 / 1854	n/a	507	n/a	538
51 / 1295	76 / 1930	n/a	517	n/a	552
51 / 1295	79 / 2007	n/a	527	n/a	561
51 / 1295	82 / 2083	n/a	538	n/a	575

J N S M L H

Metal Lateral Elevated Screen – Height-Adjustable Table Mounted

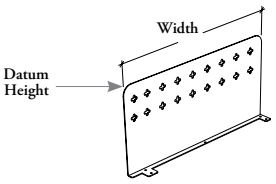

Pattern Styles

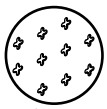

Plus (P)

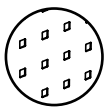

Square (S)

This metal elevated screen mounts directly to the lateral of a hiSpace Worksurface with Quick Connect Kit or a Worksurface for Navigate Base to create privacy and functional separation between workstation and the corridor.

WHAT'S INCLUDED
1 metal lateral screen and mounting hardware.

WHAT'S EXCLUDED
hiSpace Worksurfaces with Quick Connect Kit, Worksurfaces for Navigate Base, Metal Screen Accessories and Rare Earth Magnet Kit.

NOTES
For Width Extension details, refer to the Application Guide.

PRODUCT OPTIONS

Datum Height	Width	Width Extension	Corner Detail	Pattern Style	Orientation	Screen Finish
42, 51	23, 29	00, 09	**R** Radius	**P** Plus	**L** Left (Shown)	Foundation
				S Square	**R** Right	Accent
				N None	**N** None	Mica

SAMPLE ORDER CODE

JNSMLH 42	23	09	R	S	L	68

DIMENSIONS
INCHES / MM

PRICING

		NONE (N)		LEFT (L) or RIGHT (R)	
H	W	WIDTH EXTENSION (00)	WIDTH EXTENSION (09)	WIDTH EXTENSION (00)	WIDTH EXTENSION (09)
42 / 1067	23 / 584	258	n/a	n/a	282
42 / 1067	29 / 737	274	n/a	n/a	297
51 / 1295	23 / 584	299	n/a	n/a	378
51 / 1295	29 / 737	351	n/a	n/a	429

JNSMEH

Metal Back Elevated Screen – Height-Adjustable Table Mounted

This metal elevated screen mounts directly to the back of a hiSpace Worksurface with Quick Connect Kit or a Worksurface for Navigate Base to create privacy and functional separation between workstation and the corridor.

WHAT'S INCLUDED
1 metal back screen and mounting hardware.

WHAT'S EXCLUDED
hiSpace Worksurfaces with Quick Connect Kit, Worksurfaces for Navigate Base, Metal Screen Accessories and Rare Earth Magnet Kit.

Pattern Styles

Plus (P)

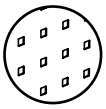

Square (S)

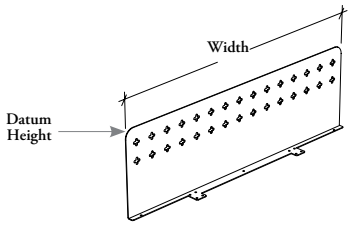

PRODUCT OPTIONS

Datum Height	Width	Corner Detail	Pattern Style	Screen Finish
42, 51	46, 52, 58, 64, 70	**R** Radius	**P** Plus **S** Square **N** None	Foundation Accent Mica

SAMPLE ORDER CODE

JNSMEH 42	70	R	S	68

DIMENSIONS INCHES / MM

H	W	PRICING
42 / 1067	46 / 1168	319
42 / 1067	52 / 1321	335
42 / 1067	58 / 1473	351
42 / 1067	64 / 1626	368
42 / 1067	70 / 1778	384
51 / 1295	46 / 1168	403
51 / 1295	52 / 1321	429
51 / 1295	58 / 1473	456
51 / 1295	64 / 1626	483
51 / 1295	70 / 1778	509

J N S M C H

Metal Corner Elevated Screen – Height-Adjustable Table Mounted

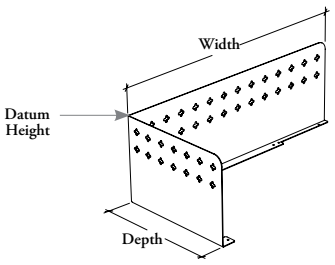

Pattern Styles

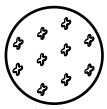

Plus (P)

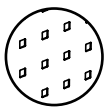

Square (S)

This metal elevated screen mounts directly to the corner of a hiSpace Worksurface with Quick Connect Kit or a Worksurface for Navigate Base to create privacy and functional separation between workstation and the corridor.

WHAT'S INCLUDED
1 metal corner screen and mounting hardware.

WHAT'S EXCLUDED
hiSpace Worksurfaces with Quick Connect Kit, Worksurfaces for Navigate Base, Metal Screen Accessories and Rare Earth Magnet Kit.

PRODUCT OPTIONS

Datum Height	Depth	Width	Corner Detail	Pattern Style	Orientation	Screen Finish
42, 51	20, 23, 29	34, 40, 46, 52, 58, 64, 70	**R** Radius	**P** Plus **S** Square **N** None	**L** Left (Shown) **R** Right	Foundation Accent Mica

SAMPLE ORDER CODE

JNSMCH 42	23	70	R	S	L	68

DIMENSIONS INCHES / MM

PRICING

H	D	W	
42 / 1067	20 / 508	34 / 864	493
42 / 1067	20 / 508	40 / 1016	508
42 / 1067	20 / 508	46 / 1168	523
42 / 1067	20 / 508	52 / 1321	538
42 / 1067	20 / 508	58 / 1473	554
42 / 1067	20 / 508	64 / 1626	571
42 / 1067	20 / 508	70 / 1778	581
42 / 1067	23 / 584	34 / 864	508
42 / 1067	23 / 584	40 / 1016	523
42 / 1067	23 / 584	46 / 1168	538
42 / 1067	23 / 584	52 / 1321	554
42 / 1067	23 / 584	58 / 1473	571
42 / 1067	23 / 584	64 / 1626	581
42 / 1067	23 / 584	70 / 1778	597
42 / 1067	29 / 737	34 / 864	523
42 / 1067	29 / 737	40 / 1016	538
42 / 1067	29 / 737	46 / 1168	554
42 / 1067	29 / 737	52 / 1321	571
42 / 1067	29 / 737	58 / 1473	581
42 / 1067	29 / 737	64 / 1626	597
42 / 1067	29 / 737	70 / 1778	614

Pricing is continued on the following page.

JNSMCH

Metal Corner Elevated Screen – Height-Adjustable Table Mounted (Continued)

DIMENSIONS INCHES / MM			PRICING
H	D	W	
51 / 1295	20 / 508	34 / 864	583
51 / 1295	20 / 508	40 / 1016	610
51 / 1295	20 / 508	46 / 1168	637
51 / 1295	20 / 508	52 / 1321	664
51 / 1295	20 / 508	58 / 1473	690
51 / 1295	20 / 508	64 / 1626	717
51 / 1295	20 / 508	70 / 1778	735
51 / 1295	23 / 584	34 / 864	610
51 / 1295	23 / 584	40 / 1016	637
51 / 1295	23 / 584	46 / 1168	664
51 / 1295	23 / 584	52 / 1321	690
51 / 1295	23 / 584	58 / 1473	717
51 / 1295	23 / 584	64 / 1626	735
51 / 1295	23 / 584	70 / 1778	762
51 / 1295	29 / 737	34 / 864	637
51 / 1295	29 / 737	40 / 1016	664
51 / 1295	29 / 737	46 / 1168	690
51 / 1295	29 / 737	52 / 1321	717
51 / 1295	29 / 737	58 / 1473	735
51 / 1295	29 / 737	64 / 1626	762
51 / 1295	29 / 737	70 / 1778	789

J N S X L H

Infinity Lateral Elevated Screen – Height-Adjustable Table Mounted

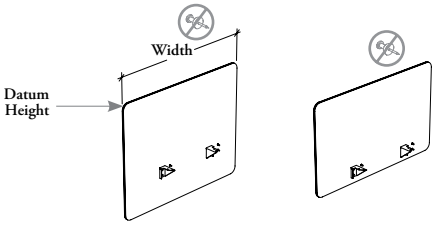

18" from Floor (18) 22" from Floor (22)

This elevated screen mounts directly to the lateral of a hiSpace Worksurface with Quick Connect Kit or a Worksurface for Navigate Base to add lightweight, thin and upholstered fabric to create separation between workstation and the corridor.

WHAT'S INCLUDED
1 infinity lateral fabric screen and mounting hardware.

WHAT'S EXCLUDED
hiSpace Worksurfaces with Quick Connect Kit or Worksurfaces for Navigate Base.

NOTES
This screen is **not** tackable.

For Width Extension details, refer to the Application Guide.

PRODUCT OPTIONS

Modesty Base Height	Datum Height	Width	Width Extension	Orientation	Screen Finish	Hardware Finish
18 18" from Floor	42, 51	23, 29	00, 09	**L** Left (Shown)	Panel Fabric	Foundation
22 22" from Floor				**R** Right		Accent
				N None		Mica

SAMPLE ORDER CODE

JNSXLH 18	42	23	09	L	T540	68

DIMENSIONS INCHES / MM

PRICING

22" FROM FLOOR (22)

WIDTH EXTENSION (00)

NONE (N)

H	W	Gr. A/ COM	Gr. 1	Gr. 2	Gr. 3	Gr. 4	Gr. 5	Gr. 6	Gr. 7
42 / 1067	23 / 584	529	535	541	567	585	602	621	638
42 / 1067	29 / 737	582	590	599	631	652	674	695	717
51 / 1295	23 / 584	651	660	672	716	747	777	807	839
51 / 1295	29 / 737	728	740	754	809	847	884	921	959

WIDTH EXTENSION (09)

LEFT (L) or RIGHT (R)

		Gr. A/ COM	Gr. 1	Gr. 2	Gr. 3	Gr. 4	Gr. 5	Gr. 6	Gr. 7
42 / 1067	23 / 584	609	618	628	664	686	710	732	756
42 / 1067	29 / 737	662	674	686	727	753	782	806	835
51 / 1295	23 / 584	768	781	796	855	897	937	978	1020
51 / 1295	29 / 737	846	861	878	948	996	1044	1092	1140

Pricing is continued on the following page.

J N S X L H

Infinity Lateral Elevated Screen – Height-Adjustable Table Mounted (Continued)

DIMENSIONS INCHES / MM

PRICING

18" FROM FLOOR (18)

WIDTH EXTENSION (00)

NONE (N)

H	W	Gr. A/ COM	Gr. 1	Gr. 2	Gr. 3	Gr. 4	Gr. 5	Gr. 6	Gr. 7
42 / 1067	23 / 584	648	657	668	712	744	774	804	835
42 / 1067	29 / 737	726	735	752	805	842	880	918	955
51 / 1295	23 / 584	807	818	831	883	919	955	992	1029
51 / 1295	29 / 737	885	897	915	978	1022	1066	1110	1153

WIDTH EXTENSION (09)

LEFT (L) or RIGHT (R)

		Gr. A/ COM	Gr. 1	Gr. 2	Gr. 3	Gr. 4	Gr. 5	Gr. 6	Gr. 7
42 / 1067	23 / 584	766	775	793	851	892	934	974	1015
42 / 1067	29 / 737	843	854	877	944	991	1041	1088	1134
51 / 1295	23 / 584	925	936	958	1025	1074	1122	1169	1216
51 / 1295	29 / 737	1002	1015	1043	1121	1177	1233	1288	1340

J N S X E H

Infinity Back Elevated Screen – Height-Adjustable Table Mounted

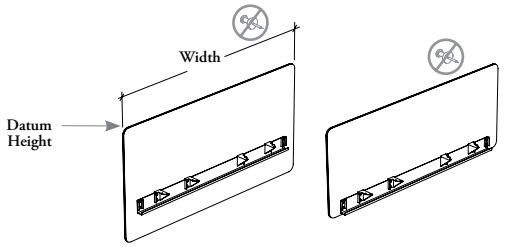

18" from Floor (18) 22" from Floor (22)

This elevated screen mounts directly to the back of a hiSpace Worksurface with Quick Connect Kit or a Worksurface for Navigate Base to create privacy and functional separation between workstation and the corridor.

WHAT'S INCLUDED
1 infinity back fabric screen, wire manager and mounting hardware.

WHAT'S EXCLUDED
hiSpace Worksurfaces with Quick Connect Kit or Worksurfaces for Navigate Base.

NOTES
This screen is **not** tackable.

PRODUCT OPTIONS

Modesty Base Height	Datum Height	Width	Screen Finish	Hardware Finish
18 18" from Floor	42, 51	46, 52, 58, 64, 70, 76, 82	Panel Fabric	Foundation
22 22" from Floor				Accent
				Mica

SAMPLE ORDER CODE

JNSXEH 18	42	46	T540	68

DIMENSIONS INCHES / MM

PRICING

		22" FROM FLOOR (22)							
H	W	Gr. A/ COM	Gr. 1	Gr. 2	Gr. 3	Gr. 4	Gr. 5	Gr. 6	Gr. 7
42 / 1067	46 / 1168	749	760	773	820	854	885	918	950
42 / 1067	52 / 1321	773	784	799	853	890	927	963	1000
42 / 1067	58 / 1473	840	853	869	928	970	1010	1052	1093
42 / 1067	64 / 1626	901	915	934	998	1044	1088	1133	1177
42 / 1067	70 / 1778	955	970	989	1060	1109	1158	1208	1256
42 / 1067	76 / 1930	1008	1024	1045	1123	1174	1227	1282	1335
42 / 1067	82 / 2083	1061	1079	1101	1186	1239	1297	1356	1414
51 / 1295	46 / 1168	928	943	966	1047	1107	1161	1217	1273
51 / 1295	52 / 1321	1006	1024	1049	1141	1205	1269	1332	1395
51 / 1295	58 / 1473	1097	1117	1145	1247	1319	1389	1458	1528
51 / 1295	64 / 1626	1195	1217	1247	1360	1436	1514	1592	1669
51 / 1295	70 / 1778	1284	1308	1343	1463	1547	1631	1716	1799
51 / 1295	76 / 1930	1373	1400	1440	1566	1659	1748	1840	1929
51 / 1295	82 / 2083	1463	1492	1536	1669	1770	1865	1964	2059

Pricing is continued on the following page.

J N S X E H

Infinity Back Elevated Screen – Height-Adjustable Table Mounted (Continued)

DIMENSIONS INCHES / MM		PRICING							
		28" FROM FLOOR (18)							
H	W	Gr. A/ COM	Gr. 1	Gr. 2	Gr. 3	Gr. 4	Gr. 5	Gr. 6	Gr. 7
42 / 1067	46 / 1168	970	986	1008	1090	1146	1203	1259	1315
42 / 1067	52 / 1321	1028	1046	1072	1163	1226	1289	1351	1414
42 / 1067	58 / 1473	1148	1168	1196	1297	1368	1438	1509	1580
42 / 1067	64 / 1626	1220	1244	1274	1385	1462	1539	1617	1695
42 / 1067	70 / 1778	1273	1297	1331	1451	1534	1618	1702	1785
42 / 1067	76 / 1930	1325	1350	1387	1517	1605	1697	1786	1876
42 / 1067	82 / 2083	1377	1404	1444	1583	1677	1776	1871	1966
51 / 1295	46 / 1168	1123	1143	1170	1266	1331	1397	1464	1531
51 / 1295	52 / 1321	1192	1215	1244	1350	1423	1499	1575	1651
51 / 1295	58 / 1473	1479	1502	1536	1654	1737	1818	1899	1980
51 / 1295	64 / 1626	1553	1582	1617	1746	1835	1927	2018	2109
51 / 1295	70 / 1778	1615	1643	1682	1825	1921	2021	2119	2219
51 / 1295	76 / 1930	1676	1703	1747	1904	2007	2115	2220	2329
51 / 1295	82 / 2083	1738	1763	1812	1982	2093	2209	2321	2439

J N S X C H

Infinity Corner Elevated Screen – Height-Adjustable Table Mounted

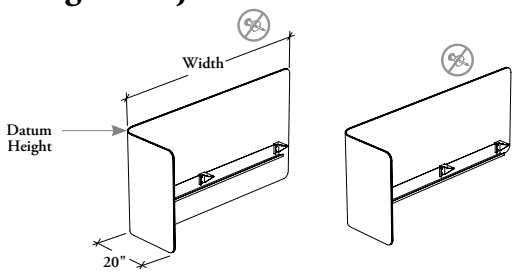

18" from Floor (18)

22" from Floor (22)

This elevated screen mounts directly to the corner of a hiSpace Worksurfaces with Quick Connect Kit or a Worksurfaces for Navigate Base to add lightweight, thin and upholstered fabric to create separation between workstation and the corridor.

WHAT'S INCLUDED
1 infinity corner fabric screen, wire manager and mounting hardware.

WHAT'S EXCLUDED
hiSpace Worksurfaces with Quick Connect Kit or Worksurfaces for Navigate Base.

NOTES
This screen is **not** tackable.

Wire Manager is present for 29" depth and **cannot** be installed for 23" depth.

Can be installed on Curved Worksurface only.

PRODUCT OPTIONS

Modesty Base Height	Datum Height	Depth	Width	Orientation	Screen Finish	Hardware Finish
18 18" from Floor	42, 51	20	23, 29, 35, 41, 47, 53, 59	**L** Left (Shown)	Panel Fabric	Foundation
22 22" from Floor				**R** Right		Accent
						Mica

SAMPLE ORDER CODE

JNSXCH 18	42	20	46	R	T540	68

DIMENSIONS
INCHES / MM

PRICING

H	D	W	22" FROM FLOOR (22) Gr. A/ COM	Gr. 1	Gr. 2	Gr. 3	Gr. 4	Gr. 5	Gr. 6	Gr. 7
42 / 1067	20 / 508	23 / 584	761	769	783	831	863	897	929	963
42 / 1067	20 / 508	29 / 737	806	817	831	885	922	959	995	1032
42 / 1067	20 / 508	35 / 889	850	862	879	938	979	1021	1064	1105
42 / 1067	20 / 508	41 / 1041	945	958	977	1042	1087	1132	1177	1223
42 / 1067	20 / 508	47 / 1194	985	999	1020	1089	1138	1188	1238	1289
42 / 1067	20 / 508	53 / 1346	1036	1052	1073	1151	1203	1256	1310	1363
42 / 1067	20 / 508	59 / 1499	1071	1087	1110	1192	1249	1306	1363	1421
51 / 1295	20 / 508	23 / 584	1044	1061	1083	1165	1223	1279	1336	1393
51 / 1295	20 / 508	29 / 737	1092	1110	1137	1228	1292	1356	1421	1485
51 / 1295	20 / 508	35 / 889	1161	1182	1211	1312	1384	1455	1525	1595
51 / 1295	20 / 508	41 / 1041	1434	1456	1486	1598	1676	1754	1833	1912
51 / 1295	20 / 508	47 / 1194	1495	1520	1552	1675	1759	1843	1929	2014
51 / 1295	20 / 508	53 / 1346	1561	1587	1624	1755	1847	1937	2029	2119
51 / 1295	20 / 508	59 / 1499	1618	1648	1685	1828	1926	2023	2120	2218

Pricing is continued on the following page.

JNSXCH

Infinity Corner Elevated Screen – Height-Adjustable Table Mounted (Continued)

DIMENSIONS
INCHES / MM

PRICING

H	D	W	18" FROM FLOOR (18) Gr. A/ COM	Gr. 1	Gr. 2	Gr. 3	Gr. 4	Gr. 5	Gr. 6	Gr. 7
42 / 1067	20 / 508	23 / 584	941	958	980	1064	1119	1176	1232	1289
42 / 1067	20 / 508	29 / 737	1022	1041	1066	1157	1220	1284	1347	1411
42 / 1067	20 / 508	35 / 889	1090	1110	1138	1240	1310	1380	1451	1521
42 / 1067	20 / 508	41 / 1041	1218	1240	1270	1382	1459	1536	1612	1689
42 / 1067	20 / 508	47 / 1194	1278	1304	1336	1457	1540	1625	1709	1793
42 / 1067	20 / 508	53 / 1346	1343	1370	1405	1536	1627	1718	1808	1898
42 / 1067	20 / 508	59 / 1499	1400	1430	1467	1608	1704	1804	1902	2002
51 / 1295	20 / 508	23 / 584	1105	1124	1152	1246	1312	1378	1445	1513
51 / 1295	20 / 508	29 / 737	1167	1189	1219	1326	1399	1474	1551	1626
51 / 1295	20 / 508	35 / 889	1238	1263	1296	1414	1496	1576	1658	1738
51 / 1295	20 / 508	41 / 1041	1520	1546	1583	1712	1801	1892	1982	2072
51 / 1295	20 / 508	47 / 1194	1590	16183	1658	1800	1898	1996	2095	2195
51 / 1295	20 / 508	53 / 1346	1677	1711	1750	1905	2010	2115	2220	2326
51 / 1295	20 / 508	59 / 1499	1742	1777	1822	1985	2100	2214	2329	2444

J N S E F H

Fabric Elevated Screen – Height-Adjustable Table Mounted

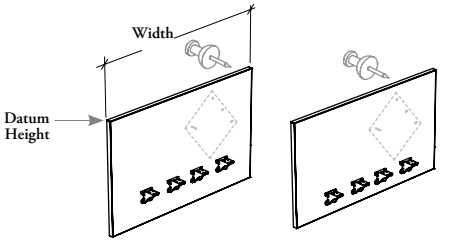

18" from Floor (18) **22" from Floor (22)**

This screen mounts directly to the hiSpace Worksurfaces with Quick Connect Kit or Worksurfaces for Navigate Base to add tackable surface, create privacy and physical separation between workstation and the corridor.

WHAT'S INCLUDED
1 fabric screen, linking devices and mounting hardware.

WHAT'S EXCLUDED
hiSpace Worksurfaces with Quick Connect Kit or Worksurfaces for Navigate Base.

NOTES
The fabric panel is 1 1/4" thick.

Fabric for each side is specified separately.

When One Side – Left (L) or One Side – Right (R) Width Extension for Corner Applications is specified, widths 46", 49", 52", 55", 58", 61", 64", 67", 70", 73", 76", 79" and 82" are **not** available.

For Width Extension for Corner Applications details, refer to the Application Guide.

PRODUCT OPTIONS

Modesty Base Height	Datum Height	Width	Width Extension for Corner Application	Inside Finish	Outside Finish	Frame Finish
18 18" from Floor	42, 51	23, 29, 46, 49, 52, 55, 58, 61, 64, 67, 70, 73, 76, 79, 82	**L** One Side – Left	Fabric	Fabric	Foundation
22 22" from Floor			**R** One Side – Right			Mica
			S Standard Width			Accent

SAMPLE ORDER CODE

JNSEFH 22	51	46	S	T540	T540	74

DIMENSIONS
INCHES / MM

PRICING

H	W	22" FROM FLOOR (22) ONE SIDE – LEFT OR RIGHT (L or R) OR STANDARD WIDTH (S) INSIDE/OUTSIDE FINISH							
		Gr. A/COM	Gr. 1	Gr. 2	Gr. 3	Gr. 4	Gr. 5	Gr. 6	Gr. 7
42 / 1067	23 / 584	605	664	684	698	724	743	760	781
42 / 1067	29 / 737	616	680	712	730	754	782	794	810
42 / 1067	46 / 1168	638	737	790	808	848	882	910	940
42 / 1067	49 / 1245	659	758	800	830	871	909	941	971
42 / 1067	52 / 1321	716	823	872	904	943	982	1010	1044
42 / 1067	55 / 1397	776	882	931	968	1013	1052	1081	1112
42 / 1067	58 / 1473	829	952	1000	1034	1080	1121	1151	1197
42 / 1067	61 / 1549	881	1007	1068	1098	1146	1192	1222	1261
42 / 1067	64 / 1626	903	1032	1094	1127	1177	1225	1265	1302
42 / 1067	67 / 1702	925	1058	1119	1164	1213	1257	1299	1341
42 / 1067	70 / 1778	949	1088	1149	1192	1245	1295	1337	1378
42 / 1067	73 / 1854	969	1112	1174	1219	1271	1322	1375	1416
42 / 1067	76 / 1930	986	1142	1217	1252	1308	1363	1415	1457
42 / 1067	79 / 2007	1010	1169	1236	1287	1342	1397	1439	1489
42 / 1067	82 / 2083	1036	1197	1269	1317	1375	1431	1479	1527

Pricing is continued on the following page.

JNSEFH

Fabric Elevated Screen – Height-Adjustabile Table Mounted (Continued)

DIMENSIONS INCHES / MM | **PRICING**

22" FROM FLOOR (22) (CONTINUED)

ONE SIDE – LEFT OR RIGHT (L or R) OR STANDARD WIDTH (S)

INSIDE/OUTSIDE FINISH

H	W	Gr. A/COM	Gr. 1	Gr. 2	Gr. 3	Gr.4	Gr. 5	Gr. 6	Gr. 7
51 / 1295	23 / 584	639	714	748	768	797	824	844	869
51 / 1295	29 / 737	671	760	798	826	858	891	914	939
51 / 1295	46 / 1168	757	888	950	982	1031	1078	1115	1153
51 / 1295	49 / 1245	778	913	972	1012	1064	1116	1153	1193
51 / 1295	52 / 1321	825	967	1031	1073	1127	1178	1221	1263
51 / 1295	55 / 1397	870	1017	1086	1130	1187	1241	1283	1328
51 / 1295	58 / 1473	918	1077	1144	1190	1250	1307	1348	1399
51 / 1295	61 / 1549	961	1127	1202	1251	1312	1371	1418	1467
51 / 1295	64 / 1626	986	1158	1240	1285	1350	1414	1464	1513
51 / 1295	67 / 1702	1011	1188	1272	1327	1391	1455	1508	1562
51 / 1295	70 / 1778	1038	1226	1307	1363	1431	1499	1553	1608
51 / 1295	73 / 1854	1065	1258	1339	1397	1470	1540	1601	1659
51 / 1295	76 / 1930	1086	1289	1385	1440	1514	1587	1649	1705
51 / 1295	79 / 2007	1109	1317	1413	1475	1550	1626	1687	1751
51 / 1295	82 / 2083	1138	1352	1451	1512	1593	1670	1733	1797

18" FROM FLOOR (18)

ONE SIDE – LEFT OR RIGHT (L or R) OR STANDARD WIDTH (S)

INSIDE/OUTSIDE FINISH

		Gr. A/COM	Gr. 1	Gr. 2	Gr. 3	Gr. 4	Gr. 5	Gr. 6	Gr. 7
42 / 1067	23 / 584	618	685	711	731	756	780	797	819
42 / 1067	29 / 737	640	714	751	770	800	828	844	870
42 / 1067	46 / 1168	690	801	858	884	925	968	999	1032
42 / 1067	49 / 1245	714	831	877	913	960	1003	1035	1073
42 / 1067	52 / 1321	764	888	945	979	1027	1070	1103	1143
42 / 1067	55 / 1397	818	945	1001	1044	1091	1138	1172	1209
42 / 1067	58 / 1473	870	1007	1066	1107	1158	1205	1241	1288
42 / 1067	61 / 1549	916	1058	1126	1165	1218	1270	1312	1350
42 / 1067	64 / 1626	938	1085	1159	1196	1251	1306	1353	1397
42 / 1067	67 / 1702	963	1117	1187	1235	1290	1342	1389	1437
42 / 1067	70 / 1778	987	1149	1218	1267	1326	1384	1434	1481
42 / 1067	73 / 1854	1010	1176	1247	1299	1359	1418	1473	1523
42 / 1067	76 / 1930	1030	1204	1289	1334	1398	1462	1517	1565
42 / 1067	79 / 2007	1052	1232	1316	1370	1435	1497	1549	1606
42 / 1067	82 / 2083	1080	1267	1349	1403	1471	1536	1590	1646
51 / 1295	23 / 584	658	741	772	799	828	860	883	906
51 / 1295	29 / 737	697	795	841	867	906	938	968	996
51 / 1295	46 / 1168	809	951	1018	1058	1112	1164	1205	1245
51 / 1295	49 / 1245	834	985	1050	1093	1149	1204	1250	1293
51 / 1295	52 / 1321	874	1034	1105	1152	1210	1266	1313	1360
51 / 1295	55 / 1397	917	1081	1154	1204	1266	1326	1375	1424
51 / 1295	58 / 1473	957	1130	1210	1258	1326	1389	1439	1491
51 / 1295	61 / 1549	996	1182	1263	1318	1383	1449	1503	1555
51 / 1295	64 / 1626	1022	1215	1300	1355	1425	1498	1553	1606
51 / 1295	67 / 1702	1048	1246	1336	1395	1469	1540	1598	1657
51 / 1295	70 / 1778	1077	1282	1377	1438	1514	1588	1648	1711
51 / 1295	73 / 1854	1105	1318	1413	1476	1557	1635	1699	1763
51 / 1295	76 / 1930	1130	1355	1454	1520	1600	1682	1751	1814
51 / 1295	79 / 2007	1155	1386	1492	1559	1642	1729	1794	1864
51 / 1295	82 / 2083	1184	1422	1533	1599	1689	1773	1846	1915

J N S E E H

Felt Elevated Screen – Height-Adjustable Table Mounted

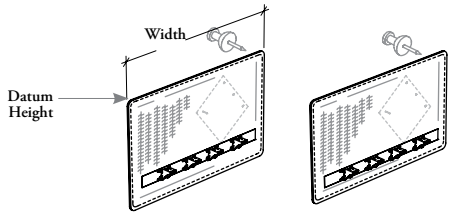

18" from Floor (18) 22" from Floor (22)

This screen mounts directly to the hiSpace Worksurfaces with Quick Connect Kit or Worksurface for Navigate Base to add acoustic and tackable surface, create privacy and physical separation between workstation and the corridor.

WHAT'S INCLUDED
1 felt screen and mounting hardware.

WHAT'S EXCLUDED
hiSpace Worksurfaces with Quick Connect Kir or Worksurfaces for Navigate Base.

PRODUCT OPTIONS

Modesty Base Height	Datum Height	Width	Width Extension for Corner Application	Corner Detail	Felt Finish	Stitches Finish	Hardware Finish
18 18" from Floor **22** 22" from Floor	42, 51	23, 29, 46, 49, 52, 55, 58, 61, 64, 67, 70, 73, 76, 79, 82	**S** Standard Width	**R** Radius	Loft	**C** Carbon Coordinate **E** Shale Coordinate **G** Carrara Coordinate **M** Umber Coordinate	**52** Ebony

SAMPLE ORDER CODE

JNSEEH 22	51	64	S	R	RB11	C	52

DIMENSIONS INCHES / MM

H	W
42 / 1067	23 / 584
42 / 1067	29 / 737
42 / 1067	46 / 1168
42 / 1067	49 / 1245
42 / 1067	52 / 1321
42 / 1067	55 / 1397
42 / 1067	58 / 1473
42 / 1067	61 / 1549
42 / 1067	64 / 1626
42 / 1067	67 / 1702
42 / 1067	70 / 1778
42 / 1067	73 / 1854
42 / 1067	76 / 1930
42 / 1067	79 / 2007
42 / 1067	82 / 2083

PRICING

22" FROM FLOOR (22)	18" FROM FLOOR (18)
297	351
405	458
560	641
593	679
632	724
669	766
699	799
732	836
761	871
784	901
814	936
841	969
868	1001
896	1034
925	1068

Pricing is continued on the following page.

JNSEEH

Felt Elevated Screen – Height-Adjustable Table Mounted (Continued)

DIMENSIONS INCHES / MM		PRICING	
H	W	22" FROM FLOOR (22)	18" FROM FLOOR (18)
51 / 1295	23 / 584	416	471
51 / 1295	29 / 737	525	580
51 / 1295	46 / 1168	742	824
51 / 1295	49 / 1245	789	873
51 / 1295	52 / 1321	842	931
51 / 1295	55 / 1397	889	985
51 / 1295	58 / 1473	930	1030
51 / 1295	61 / 1549	972	1078
51 / 1295	64 / 1626	1013	1123
51 / 1295	67 / 1702	1051	1167
51 / 1295	70 / 1778	1092	1215
51 / 1295	73 / 1854	1131	1257
51 / 1295	76 / 1930	1172	1303
51 / 1295	79 / 2007	1210	1349
51 / 1295	82 / 2083	1250	1394

J N S E L E H

Felt End Screen – Height-Adjustable Table Mounted

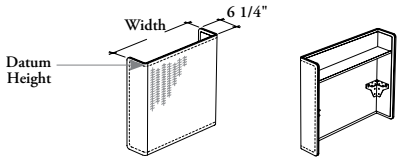

18" from Floor (18)

This screen mounts at the end of a hiSpace Worksurfaces with Quick Connect Kit or Worksurface for Navigate Base providing acoustic and tackable surface (outside) shelf and magnetic surface (inside) creating privacy and physical separation between the workstation and corridor.

WHAT'S INCLUDED
Metal and felt screen and mounting hardware.

WHAT'S EXCLUDED
hiSpace Worksurfaces with Quick Connect Kit or Worksurface for Navigate Base.

PRODUCT OPTIONS

Modesty Base Height	Datum Height	Width	Corner Detail	Felt Finish	Stitches Finish	Inside Finish
18 18" from Floor	42	23, 29	**R** Radius	Loft	**C** Carbon Coordinate **E** Shale Coordinate **G** Carrara Coordinate **M** Umber Coordinate	Foundation Accent Mica

SAMPLE ORDER CODE

JNSELEH 18	42	23	R	RB11	C	68

DIMENSIONS
INCHES / MM

H	W	PRICING
42 / 1067	23 / 584	1145
42 / 1067	29 / 737	1186

casual screens & accessories

casual screens & accessories product map

J N S F S F Floor Screen – Freestanding

Page 1190

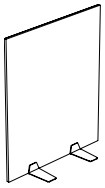

J N S F G F Floor Screen with Glass – Freestanding

Page 1191

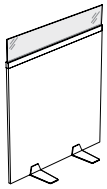

J N S F M Functional Screen – Metal

Page 1193

J N S S M Sit and Slide Screen – Metal

Page 1194

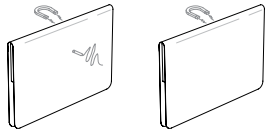

J N S S E Sit and Slide Screen – Felt

Page 1195

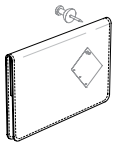

J N S S A Sit and Slide Screen with Accessories – Metal

Page 1196

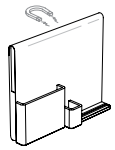

J N S C G Casual Board – Glass

Page 1197

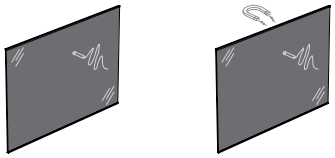

J N S C E Casual Board – Felt

Page 1198

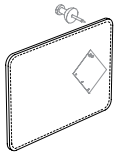

casual screens & accessories product map

J N S S H Floor Screen Hook

Page 1199

J N S M T Markerboard Tray

Page 1200

J N S F S F
Floor Screen – Freestanding

This Freestanding Floor Screen creates privacy and space delimination between workstations or corridor, while being easily reconfigurable.

WHAT'S INCLUDED
1 solid screen, 2 foot and mouting hardware.

NOTES
The solid panel is 1" thick.

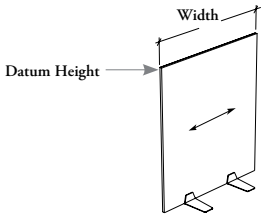

PRODUCT OPTIONS

Datum Height	Width	Corner Detail	Screen Finish	Foot Finish
42, 51, 57	42, 48, 54	**R** Radius **S** Standard (Shown)	Source Laminate	Foundation Mica Accent

SAMPLE ORDER CODE

JNSFSF 51	54	S	XS	74

DIMENSIONS
INCHES / MM

PRICING

H	W	STANDARD (S)	RADIUS (R)
42 / 1067	42 / 1067	672	731
42 / 1067	48 / 1219	709	773
42 / 1067	54 / 1372	746	814
51 / 1295	42 / 1067	727	792
51 / 1295	48 / 1219	773	843
51 / 1295	54 / 1372	817	890
57 / 1448	42 / 1067	767	837
57 / 1448	48 / 1219	815	888
57 / 1448	54 / 1372	864	940

JNSFGF
Floor Screen with Glass – Freestanding

This Freestanding Floor Screen with Glass creates privacy and space delimination between workstations or corridor, while being easily reconfigurable and maintaining access to day light.

WHAT'S INCLUDED
1 solid screen with glass, 2 foot and mouting hardware.

NOTES
The solid panel is 1" thick and tempered glass is 1/4" (6 mm) thick.

Frost Finishes (FT or LB) are single-sided etched, Satin (FB) is etched on both sides.

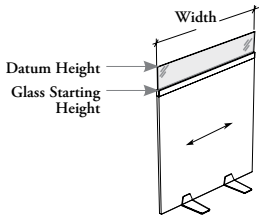

PRODUCT OPTIONS

Datum Height	Glass Starting Height	Width	Corner Detail	Screen Finish	Frame Finish	Glass Finish	Foot Finish
42, 51, 57	29, 42	42, 48, 54	**R** Radius **S** Standard (Shown)	Source Laminate	Foundation Mica Accent	**Standard Glass:** **CL** Clear **FT** Frost **FB** Satin **Low Iron Glass:** **LA** Clear – Low Iron Glass **LB** Frost – Low Iron Glass	Foundation Mica Accent

SAMPLE ORDER CODE

JNSFGF 51	29	54	S	XS	74	LB	74

DIMENSIONS
INCHES / MM

PRICING

		29" GLASS STARTING HEIGHT									
		STANDARD (S)					RADIUS (R)				
H	W	Clear (CL)	Frost (FT)	Satin (FB)	Clear – Low Iron (LA)	Frost – Low Iron (LB)	Clear (CL)	Frost (FT)	Satin (FB)	Clear – Low Iron (LA)	Frost – Low Iron (LB)
42 / 1067	42 / 1067	922	953	1058	974	1000	1005	1036	1142	1057	1084
42 / 1067	48 / 1219	978	1013	1134	1040	1068	1062	1097	1217	1123	1151
42 / 1067	54 / 1372	1036	1077	1210	1104	1140	1120	1161	1294	1187	1223
51 / 1295	42 / 1067	1035	1089	1266	1125	1170	1119	1172	1350	1208	1253
51 / 1295	48 / 1219	1101	1163	1365	1205	1252	1185	1246	1448	1288	1336
51 / 1295	54 / 1372	1172	1241	1469	1287	1343	1256	1324	1553	1371	1426
57 / 1448	42 / 1067	n/a	n/a	n/a	n/a	n/a	n/a	n/a	n/a	n/a	n/a
57 / 1448	48 / 1219	n/a	n/a	n/a	n/a	n/a	n/a	n/a	n/a	n/a	n/a
57 / 1448	54 / 1372	n/a	n/a	n/a	n/a	n/a	n/a	n/a	n/a	n/a	n/a

Pricing is continued on the following page.

J N S F G F

Floor Screen with Glass – Freestanding (Continued)

DIMENSIONS
INCHES / MM

PRICING

		42" GLASS STARTING HEIGHT									
		STANDARD (S)					RADIUS (R)				
		Clear (CL)	Frost (FT)	Satin (FB)	Clear – Low Iron (LA)	Frost – Low Iron (LB)	Clear (CL)	Frost (FT)	Satin (FB)	Clear – Low Iron (LA)	Frost – Low Iron (LB)
42 / 1067	42 / 1067	n/a	n/a	n/a	n/a	n/a	n/a	n/a	n/a	n/a	n/a
42 / 1067	48 / 1219	n/a	n/a	n/a	n/a	n/a	n/a	n/a	n/a	n/a	n/a
42 / 1067	54 / 1372	n/a	n/a	n/a	n/a	n/a	n/a	n/a	n/a	n/a	n/a
51 / 1295	42 / 1067	939	962	1033	976	994	1023	1046	1116	1060	1077
51 / 1295	48 / 1219	998	1024	1106	1039	1061	1082	1107	1190	1122	1144
51 / 1295	54 / 1372	1061	1090	1181	1108	1133	1144	1173	1265	1192	1216
57 / 1448	42 / 1067	1142	1179	1300	1203	1232	1226	1263	1383	1287	1316
57 / 1448	48 / 1219	1221	1261	1400	1289	1325	1304	1345	1483	1373	1409
57 / 1448	54 / 1372	1306	1353	1507	1384	1423	1389	1437	1591	1468	1506

JNSFM
Functional Screen – Metal

The Functional Screen create privacy and functionality between users or at the end of a workstation.

WHAT'S INCLUDED
1 metal screen, felt liner and mouting hardware.

NOTES
When Felt Finish is not specified, the felt comes in Carbon (RB11).

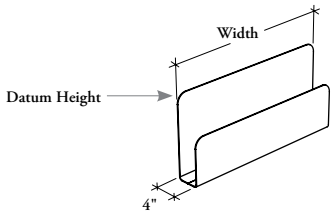

PRODUCT OPTIONS

Finish Style	Depth	Datum Height	Width	Finish	Felt Finish
S Standard Paint	04	42	21, 23, 24, 27, 29, 30, 33, 36, 39, 42, 45, 48, 54, 60, 66, 72, 78, 84	Foundation Mica Accent	Loft

SAMPLE ORDER CODE

JNSFM S	04	42	24	74	RB11

DIMENSIONS INCHES / MM

D	H	W	PRICING
4 / 102	42 / 1067	21 / 533	143
4 / 102	42 / 1067	23 / 584	157
4 / 102	42 / 1067	24 / 610	157
4 / 102	42 / 1067	27 / 686	173
4 / 102	42 / 1067	29 / 737	187
4 / 102	42 / 1067	30 / 762	187
4 / 102	42 / 1067	33 / 838	203
4 / 102	42 / 1067	36 / 914	217
4 / 102	42 / 1067	39 / 991	233
4 / 102	42 / 1067	42 / 1067	248
4 / 102	42 / 1067	45 / 1143	262
4 / 102	42 / 1067	48 / 1219	278
4 / 102	42 / 1067	54 / 1372	309
4 / 102	42 / 1067	60 / 1524	338
4 / 102	42 / 1067	66 / 1676	370
4 / 102	42 / 1067	72 / 1829	401
4 / 102	42 / 1067	78 / 1981	429
4 / 102	42 / 1067	84 / 2134	461

JNSSM
Sit and Slide Screen – Metal

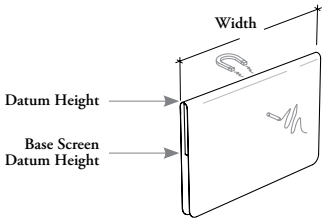

This screen mounts onto top edge of all solid screens to provide additional writable and magnetic surface. Can be moved easily and reconfigured without tools.

WHAT'S INCLUDED
1 metal screen and 8 rare earth magnets.

NOTES
The Whiteboard finish (WZ) is **not** available with Standard Paint (S).

This Sit and Slide Screen can be used only with the following products:

- Solid Add-On Screens (JNSASB, JNSASW or JZSASB)
- Solid Elevated Screens (JNSESB, JNSESW or JZSESB)
- Solid Floor Screens (JNSFSB, JNSFSW or JZSFSB)

PRODUCT OPTIONS

Finish Style	Datum Height	Base Screen Datum Height	Width	Finish
S Standard Paint	44, 53, 59	42, 51, 57	24, 30, 36, 42	Foundation
W Writable Paint				Mica
				Accent
				WZ Whiteboard

SAMPLE ORDER CODE

JNSSM S	53	42	24	74

DIMENSIONS
INCHES / MM

PRICING

		42" BASE SCREEN DATUM HEIGHT		51" BASE SCREEN DATUM HEIGHT		57" BASE SCREEN DATUM HEIGHT	
H	W	STANDARD PAINT (S)	WRITABLE PAINT (W)	STANDARD PAINT (S)	WRITABLE PAINT (W)	STANDARD PAINT (S)	WRITABLE PAINT (W)
44 / 1118	24 / 610	231	n/a				
44 / 1118	30 / 762	245	n/a				
44 / 1118	36 / 914	262	n/a				
44 / 1118	42 / 1067	281	n/a				
53 / 1346	24 / 610	295	501	300	n/a	n/a	n/a
53 / 1346	30 / 762	324	n/a	331	n/a	n/a	n/a
53 / 1346	36 / 914	354	602	361	n/a	n/a	n/a
53 / 1346	42 / 1067	383	n/a	391	n/a	n/a	n/a
59 / 1499	24 / 610			338	579	345	n/a
59 / 1499	30 / 762			377	n/a	380	n/a
59 / 1499	36 / 914			413	704	418	n/a
59 / 1499	42 / 1067			449	n/a	455	n/a

JNSSE
Sit and Slide Screen – Felt

This screen mounts onto top edge of all solid screens to provide additional tackable surface. Can be move easily and reconfigured without tools.

WHAT'S INCLUDED
1 felt screen.

NOTES
This Sit and Slide Screen can be used only with the following products:

- Solid Add-On Screens (JNSASB, JNSASW or JZSASB)
- Solid Elevated Screens (JNSESB, JNSESW or JZSESB)
- Solid Floor Screens (JNSFSB, JNSFSW or JZSFSB)

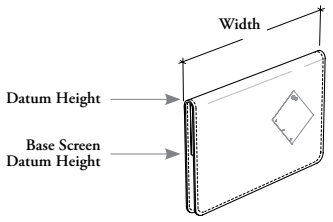

PRODUCT OPTIONS

Datum Height	Base Screen Datum Height	Width	Felt Finish	Stitches Finish
44, 53, 59	42, 51, 57	24, 30, 36, 42	Loft	**C** Carbon Coordinate **E** Shale Coordinate **G** Carrara Coordinate **M** Umber Coordinate

SAMPLE ORDER CODE

JNSSE 53	42	24	RB11	C

DIMENSIONS INCHES / MM

PRICING

H	W	42" BASE SCREEN DATUM HEIGHT	51" BASE SCREEN DATUM HEIGHT	57" BASE SCREEN DATUM HEIGHT
44 / 1118	24 / 610	509		
44 / 1118	30 / 762	525		
44 / 1118	36 / 914	538		
44 / 1118	42 / 1067	563		
53 / 1346	24 / 610	660	670	n/a
53 / 1346	30 / 762	676	684	n/a
53 / 1346	36 / 914	725	733	n/a
53 / 1346	42 / 1067	756	766	n/a
59 / 1499	24 / 610		839	824
59 / 1499	30 / 762		832	842
59 / 1499	36 / 914		882	889
59 / 1499	42 / 1067		916	927

JNSSA

Sit and Slide Screen with Accessories – Metal

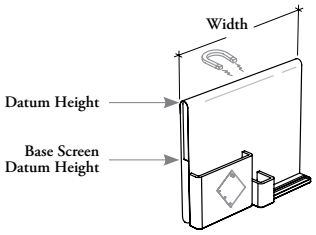

This screen mounts onto top edge of all solid screen to provide additional magnetic surface, small tackable surface, paper management, and storage. It can be moved easily and reconfigured without tools.

WHAT'S INCLUDED

1 metal screen, 4 rare earth magnets and 3 (if single-sided configuration) or 6 (if double-sided configuration) felt accessories.

NOTES

This Sit and Slide Screen can be used only with the following products:

- Solid Add-On Screens (JNSASB, JNSASW or JZSASB)
- Solid Elevated Screens (JNSESB, JNSESW or JZSESB)
- Solid Floor Screens (JNSFSB, JNSFSW or JZSFSB)

PRODUCT OPTIONS

Screen Finish Style	Datum Height	Base Screen Datum Height	Width	Accessory Configuration	Screen Finish	Accessory Finish
S Standard Paint	44, 53, 59	42, 51, 57	24	**D** Double-Sided	Foundation	Loft
				S Single-Sided	Mica	
					Accent	

SAMPLE ORDER CODE

JNSSA S	53	42	24	D	74	RB11

DIMENSIONS INCHES / MM

PRICING

H	W	SINGLE-SIDED ACCESSORY (S)	DOUBLE-SIDED ACCESSORY (D)
		42" BASE SCREEN DATUM HEIGHT	
44 / 1118	24 / 610	414	530
53 / 1346	24 / 610	503	622
		51" BASE SCREEN DATUM HEIGHT	
53 / 1346	24 / 610	516	631
59 / 1499	24 / 610	565	684
		57" BASE SCREEN DATUM HEIGHT	
59 / 1499	24 / 610	573	695

JNSCG
Casual Board – Glass

This board must be installed on the front of a solid screen to provide additional writable and magnetic surface.

WHAT'S INCLUDED
1 glass board, mounting extrusions, 8 rare earth magnets (with magnetic glass only) and mounting hardware.

NOTES
The tempered glass is 5/32" (4 mm) thick.

Mounting extrusion finish will match the Glass Finish.

Listed dimensions are nominal. Board should be specified to solid screen height.

This Casual Board can be used only with the following products:

- Solid Add-On Screens (JNSASB, JNSASW or JZSASB)
- Solid Elevated Screens (JNSESB, JNSESW, JNSESL or JZSESB)
- Solid Floor Screens (JNSFSB, JNSFSW, JNSFSL, JNFST, JZSFSB or JZSFSP)
- Solid Floor Screen with Metal Towers (JNFOL, JNFOT, JNFDL, JNFDT, JNFTL, JNFTT, JZSFOP, JZSFDP, JZSFTP)

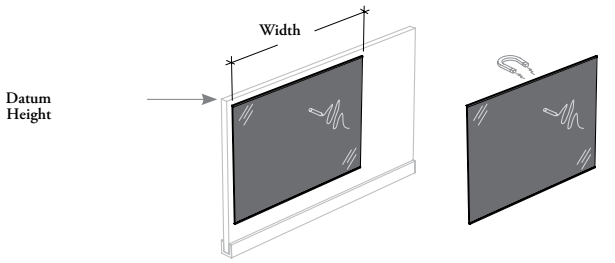

Glass Only (G) Magnetic Glass (M)

PRODUCT OPTIONS

Markerboard Style	Datum Height	Width	Corner Detail	Glass Finish
G Glass Only	42, 51, 57	12, 15, 18, 24, 30, 36, 42	**R** Radius	Back-Painted
M Magnetic Glass			**S** Standard (Shown)	

SAMPLE ORDER CODE

JNSCG M	51	24	S	K7

DIMENSIONS INCHES / MM

PRICING

		GLASS ONLY (G)		MAGNETIC GLASS (M)	
H	W	STANDARD (S)	RADIUS (R)	STANDARD (S)	RADIUS (R)
42 / 1067	12 / 305	208	397	332	521
42 / 1067	15 / 381	233	422	361	550
42 / 1067	18 / 457	258	447	391	580
42 / 1067	24 / 610	283	472	419	608
42 / 1067	30 / 762	304	493	448	637
42 / 1067	36 / 914	351	541	499	688
42 / 1067	42 / 1067	397	586	552	741
51 / 1295	12 / 305	287	476	461	650
51 / 1295	15 / 381	311	500	488	677
51 / 1295	18 / 457	333	522	520	709
51 / 1295	24 / 610	358	548	546	735
51 / 1295	30 / 762	426	615	623	812
51 / 1295	36 / 914	498	687	701	890
51 / 1295	42 / 1067	564	753	778	967
57 / 1448	12 / 305	336	525	544	733
57 / 1448	15 / 381	361	550	573	762
57 / 1448	18 / 457	385	574	602	791
57 / 1448	24 / 610	411	600	630	819
57 / 1448	30 / 762	506	695	740	929
57 / 1448	36 / 914	594	783	834	1023
57 / 1448	42 / 1067	676	865	931	1121

J N S C E
Casual Board – Felt

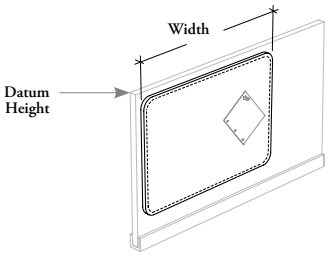

This board is designed to be installed on Solid Screens and Metal Sit and Slide. It provides additional tackable surface.

WHAT'S INCLUDED
1 felt board and mounting hardware.

NOTES
Listed dimensions are nominal. Board should be specified to screen height.

This Casual Board can be used only with the following products:

- Solid Add-On Screens (JNSASB JNSASW or JZSASB)
- Solid Elevated Screens (JNSESB, JNSESW, JNSESL or JZSESB)
- Solid Floor Screens (JNSFSB, JNSFSW, JNSFSL , JNFST, JZSFSB or JZSFSP)
- Solid Floor Screen with Metal Towers (JNFOL, JNFOT, JNFDL, JNFDT, JNFTL, JNFTT, JZSFOP, JZSFDP, JZSFTP)
- Sit and Slide Screen – Metal (JNSSM)
- Solid Lift and Drop Tiles (JZTSH or JZTSV)

PRODUCT OPTIONS

Datum Height	Width	Corner Detail	Board Finish	Stitches Finish
42, 51, 57	12, 15, 18, 24, 30, 36, 42	**R** Radius	Loft	**C** Carbon Coordinate **E** Shale Coordinate **G** Carrara Coordinate **M** Umber Coordinate

SAMPLE ORDER CODE

JNSCE 51	24	R	RB11	C

DIMENSIONS INCHES / MM

H	W	PRICING
42 / 1067	12 / 305	55
42 / 1067	15 / 381	66
42 / 1067	18 / 457	79
42 / 1067	24 / 610	107
42 / 1067	30 / 762	129
42 / 1067	36 / 914	172
42 / 1067	42 / 1067	184
51 / 1295	12 / 305	84
51 / 1295	15 / 381	99
51 / 1295	18 / 457	116
51 / 1295	24 / 610	154
51 / 1295	30 / 762	197
51 / 1295	36 / 914	262
51 / 1295	42 / 1067	275
57 / 1448	12 / 305	106
57 / 1448	15 / 381	124
57 / 1448	18 / 457	142
57 / 1448	24 / 610	194
57 / 1448	30 / 762	240
57 / 1448	36 / 914	324
57 / 1448	42 / 1067	336

JNSSH
Floor Screen Hook

This hook provides casual hanging capacity to any 1" thick panel. It can be easily repositioned.

WHAT'S INCLUDED
1 floor screen hook.

WHAT'S EXCLUDED
1" thick Solid Screens.

NOTES
The Felt Pads are finished in Black.

Can only be used with 1" thick panel.

This product may impact the stability of the structure on which it is installed.

PRODUCT OPTIONS

Style	Finish
S Solid Screen-Mounted	Foundation Accent Mica

SAMPLE ORDER CODE

JNSSH S	**52**

PRICING

66

J N S M T
Markerboard Tray

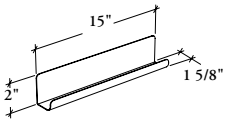

Markerboard Tray provides storage for dry-erase markers and eraser to be used in conjunction with a markerboard. It can be installed where is required with Velcro® bands.

WHAT'S INCLUDED
1 markerboard tray and Velcro® bands.

WHAT'S EXCLUDED
Dry-Erase Kit.

NOTES
Can be used only with the following products:

- Sit and Slide Screens (JNSSM)
- Casual Board (JNSCG)
- Glass Markerboards (JNSMF or JNFMF)
- Lift and Drop Tiles (JZTMW, JZTGW or JZTGM)

PRODUCT OPTIONS

Finish
Foundation
Accent
Mica

SAMPLE ORDER CODE

JNSMT 52

PRICING

	70

beam-mounted storage

beam-mounted storage product map

J N B P Suspended Pedestal – File Drawer

Page 1206

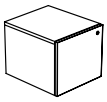

J N B C Suspended Cubby

Page 1208

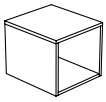

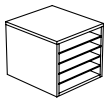

J N B S F Suspended Credenza – Lateral File

Page 1210

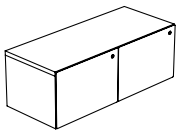

J N B D F Semi-Suspended Credenza – Lateral File

Page 1212

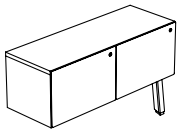

J N B S O Suspended Credenza – Open with Lateral File

Page 1214

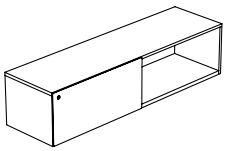

J N B D O Semi-Suspended Credenza – Open with Lateral File

Page 1216

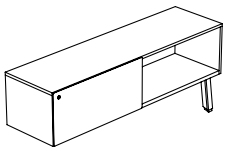

J N B S O O Suspended Credenza – Open

Page 1218

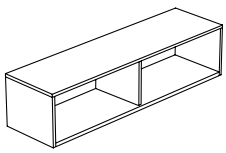

J N B D O O Semi-Suspended Credenza – Open

Page 1220

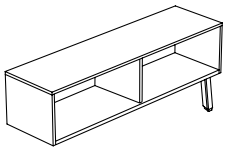

beam-mounted storage product map

J N B S C Suspended Credenza – Open with Combo File

Page 1222

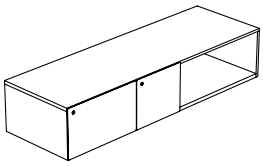

J N B D C Semi-Suspended Credenza – Open with Combo File

Page 1224

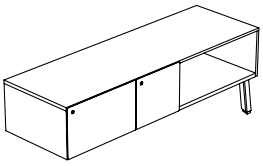

J N B S H Suspended Shelf – Solid

Page 1226

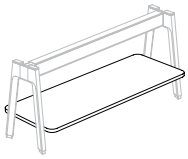

J N B B W Beam-Mounted Shelf

Page 1227

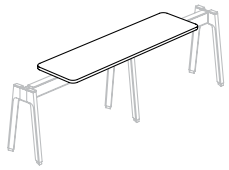

J N B B L O Beam-Mounted Cabinet – Open

Page 1228

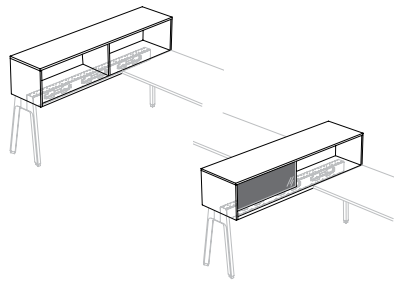

J N B D L O Lateral Hang-On Cabinet – Open

Page 1230

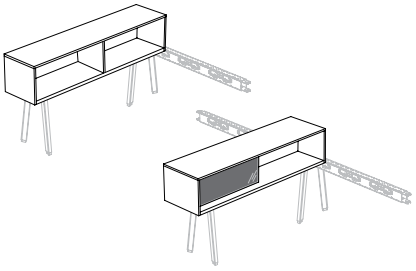

J N B P
Suspended Pedestal – File Drawer

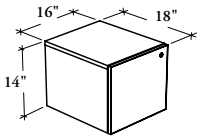

This pedestal provides a suspended filing unit under a worksurface.

WHAT'S INCLUDED
1 pedestal, 1 drawer, 1 12" hanging file bar, lock and keys (as specified) and mounting hardware.

WHAT'S EXCLUDED
Structural Legs, Worksurfaces and File Drawer Organizer.

NOTES
Cannot be used in freestanding application.

Included hanging file bar is to be installed along the width only.

The Support Mounting Hardware Finish can be specified to match the case or the leg to which the storage is mounted to. See the application guide section for details.

When Front Style (M or N) is specified, only Metal Drawer Front Finish is available.

When Front Style (S or T) is specified, only Laminate Drawer Front Finish is available.

When Front Style (M or S) is specified, Pull Style and Pull Finish are **not** available.

PRODUCT OPTIONS

Front Style	Case Height	Depth	Width	Front Finish	Edge Trim Finish (for Laminate Front only)
M Metal	14	18	16	**Metal Front:** (for metal front style)	Edge Trim Colors
N Metal with Pull				Foundation	
S Solid (Shown)				Mica	
T Solid with Pull				Accent	
				Laminate Front: (for solid front style)	
				Source Laminate	
				Foundation Laminate	

SAMPLE ORDER CODE

JNBP S	14	18	16	3D	4D

PRODUCT OPTIONS CONTINUED

Case Finish	Pull Style (for Front Style (N or T) only)	Pull Finish (for Front Style (N or T) only)	Key Style	Support Mounting Hardware Finish
Source Laminate	**C** Cityline Recessed	Foundation	**K** Keyed Alike	Foundation
		Mica	**R** Keyed Randomly	Mica
		Accent	**N** No Lock	Accent
				Coordinate Colors

SAMPLE ORDER CODE

3D			K	60

See Pricing on the following page.

J N B P
Suspended Pedestal – File Drawer (Continued)

DIMENSIONS INCHES / MM			PRICING		
			METAL FRONT (M) or METAL FRONT WITH PULL (N)	SOLID FRONT (S) or SOLID FRONT WITH PULL (T)	
H	D	W		Source Laminate	Foundation Laminate
14 / 356	18 / 457	16 / 406	766	766	792

J N B C
Suspended Cubby

This cubby provides an open storage or pigeonhole unit under a worksurface.

WHAT'S INCLUDED
1 cubby, 4 shelves (with configuration (S)) and mounting hardware.

WHAT'S EXCLUDED
Structural Legs and worksurfaces.

NOTES
Cannot be used in freestanding application.

When Open Configuration (O) is specified, the Shelf Finish option is **not** available.

The Support Mounting Hardware Finish can be specified to match the case or the leg to which the storage is mounted to. See the application guide section for details.

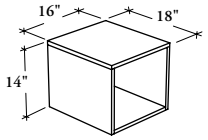

Open (O)

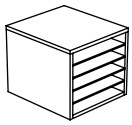
Shelves (S)

PRODUCT OPTIONS

Configuration	Case Height	Depth	Width	Case Finish	Shelf Finish (If Applicable)	Support Mounting Hardware Finish
O Open	14	18	16	Source Laminate	Foundation	Foundation
S Shelves					Mica	Mica
					Accent	Accent
						Coordinate Colors

SAMPLE ORDER CODE

JNBC O	14	18	16	3D		53

DIMENSIONS
INCHES / MM

H	D	W
14 / 356	18 / 457	16 / 406

PRICING

Open (O)	Shelves (S)
538	702

EZ compatible

J N B S F
Suspended Credenza – Lateral File

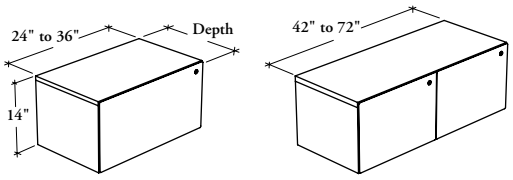

This storage must be installed on-module, between two structural legs and on front of a structural beam, to provide high density filing and organized storage.

WHAT'S INCLUDED

1 credenza, lock and keys (as specified), mounting hardware and accessories as listed below:

	Width				
	24"	30" or 36"	42" to 54"	60" to 72"	
Drawer	1	1	2	2	
12" Hang. File Bar (if 18" d.)	1	2	1	2	per drawer
15" Hang. File Bar (if 24" d.)	1	2	1	2	per drawer

WHAT'S EXCLUDED

Structural Beam, Chicago Structural Beam, EZ Fence Beam, Chicago EZ Fence Beam, EZ Fence Beam for Corridor, Chicago EZ Fence Beam for Corridor, EZ Structural Legs, Structural Legs and File Drawer Organizer.

NOTES

Beam Configuration must match the beam on which the storage will be mounted.

This storage unit is equipped with an interlock system that prevents opening more than one drawer at a time.

Included hanging file bars are to be installed along the depth only.

The Support Mounting Hardware Finish can be specified to match the case or the leg to which the storage is mounted to. See the application guide section for details.

When Front Style (M or N) is specified, only Metal Drawer Front Finish is available.

When Front Style (S or T) is specified, only Laminate Drawer Front Finish is available.

When Front Style (M or S) is specified, Pull Style and Pull Finish are **not** available.

PRODUCT OPTIONS

Front Style	Structural Leg Style	Case Height	Depth	Width	Width Reduction	Beam Configuration
M Metal (Shown)	**A** Angled	**14** 14" (Datum Height 24")	18, 24	24, 30, 36, 42, 48, 54, 60, 66, 72	**FF** Full Legs	**D** Double-Sided
N Metal with Pull					**FH** Full/Shared Legs	**S** Single-Sided
S Solid					**HH** Shared Legs_ None/Full Leg	
T Solid with Pull					**NH** None/Shared Leg	
					NN None Leg	

SAMPLE ORDER CODE

JNBSF S	A	14	18	24	FF	S

PRODUCT OPTIONS CONTINUED

Front Finish	Edge Trim Finish (for Laminate Front only)	Case Finish	Pull Style (for Front Style (N or T) only)	Pull Finish (for Front Style (N or T) only)	Key Style	Support Mounting Hardware Finish
Metal Front: (for metal front style)	Edge Trim Colors	Source Laminate	**C** Cityline Recessed	Foundation	**K** Keyed Alike	Foundation
Foundation				Mica	**R** Keyed Randomly	Mica
Mica				Accent	**N** No Lock	Accent
Accent						Coordinate Colors
Laminate Front: (for solid front style)						
Source Laminate						
Foundation Laminate						

SAMPLE ORDER CODE

3D	4D	3D			R	60

See Pricing on the following page.

J N B S F

Suspended Credenza – Lateral File (Continued)

DIMENSIONS INCHES / MM			PRICING		
			METAL FRONT (M) or METAL FRONT WITH PULL (N)	SOLID FRONT (S) or SOLID FRONT WITH PULL (T)	
H	D	W		Source Laminate	Foundation Laminate
14 / 356	18 / 457	24 / 610	861	861	902
14 / 356	18 / 457	30 / 762	942	942	992
14 / 356	18 / 457	36 / 914	1025	1025	1085
14 / 356	18 / 457	42 / 1067	1329	1329	1400
14 / 356	18 / 457	48 / 1219	1411	1411	1491
14 / 356	18 / 457	54 / 1372	1491	1491	1581
14 / 356	18 / 457	60 / 1524	1571	1571	1670
14 / 356	18 / 457	66 / 1676	1651	1651	1761
14 / 356	18 / 457	72 / 1829	1732	1732	1850
14 / 356	24 / 610	24 / 610	977	977	1017
14 / 356	24 / 610	30 / 762	1059	1059	1109
14 / 356	24 / 610	36 / 914	1139	1139	1201
14 / 356	24 / 610	42 / 1067	1444	1444	1515
14 / 356	24 / 610	48 / 1219	1528	1528	1608
14 / 356	24 / 610	54 / 1372	1608	1608	1697
14 / 356	24 / 610	60 / 1524	1688	1688	1788
14 / 356	24 / 610	66 / 1676	1768	1768	1877
14 / 356	24 / 610	72 / 1829	1848	1848	1967

EZ compatible

J N B D F

Semi-Suspended Credenza – Lateral File

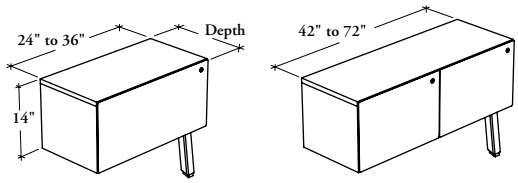

This storage is semi-supported, so it must be installed on front of a structural beam and provide high density filing and organized storage.

WHAT'S INCLUDED

1 credenza, angled foot with leveler (as specified), lock and keys (as specified), mounting hardware and accessories listed below:

	Width				
	24"	30" or 36"	42" to 54"	60" to 72"	
Drawer	1	1	2	2	
12" Hang. File Bar (if 18" d.)	1	2	1	2	per drawer
15" Hang. File Bar (if 24" d.)	1	2	1	2	per drawer

WHAT'S EXCLUDED

Structural Beam, Chicago Structural Beam, EZ Fence Beam, Chicago EZ Fence Beam, EZ Fence Beam for Corridor, Chicago EZ Fence Beam for Corridor, EZ Structural Legs, Structural Legs and File Drawer Organizer.

NOTES

Beam Configuration must match the beam on which the storage will be mounted.

This storage unit is equipped with an interlock system that prevents opening more than one drawer at a time.

Included hanging file bars are to be installed along the depth only.

The Support Mounting Hardware Finish can be specified to match the case or the leg to which the storage is mounted to. See the application guide section for details.

When Front Style (M or N) is specified, only Metal Drawer Front Finish is available.

When Front Style (S or T) is specified, only Laminate Drawer Front Finish is available.

When Front Style (M or S) is specified, Pull Style and Pull Finish are **not** available.

PRODUCT OPTIONS

Front Style	Foot and Structural Leg Style	Case Height	Depth	Width	Foot Option	Beam Configuration	Front Finish
M Metal (Shown)	**A** Angled	**14** 14" (Datum Height 24")	18, 24	24, 30, 36, 42, 48, 54, 60, 66, 72	**O** One Foot (Shown)	**D** Double-Sided	**Metal Front:** (for metal front style)
N Metal with Pull					**T** Two Feet	**S** Single-Sided	Foundation
S Solid							Mica
T Solid with Pull							Accent
							Laminate Front: (for solid front style)
							Source Laminate
							Foundation Laminate

SAMPLE ORDER CODE

JNBDF S	A	14	18	72	O	D	3D

PRODUCT OPTIONS CONTINUED

Edge Trim Finish (for Laminate Front only)	Case Finish	Foot Finish	Pull Style (for Front Style (N or T) only)	Pull Finish (for Front Style (N or T) only)	Key Style	Support Mounting Hardware Finish
Edge Trim Colors	Source Laminate	Foundation	**C** Cityline Recessed	Foundation	**K** Keyed Alike	Foundation
		Mica		Mica	**R** Keyed Randomly	Mica
		Accent		Accent	**N** No Lock	Accent
						Coordinate Colors

SAMPLE ORDER CODE CONTINUED

4D	3D	60			R	60

See Pricing on the following page.

J N B D F

Semi-Suspended Credenza – Lateral File (Continued)

DIMENSIONS INCHES / MM			PRICING		
			ONE FOOT (O)		
			METAL FRONT (M) or METAL FRONT WITH PULL (N)	SOLID FRONT (S) or SOLID FRONT WITH PULL (T)	
				Source Laminate	Foundation Laminate
H	D	W			
14 / 356	18 / 457	24 / 610	1056	1056	1085
14 / 356	18 / 457	30 / 762	1137	1137	1166
14 / 356	18 / 457	36 / 914	1217	1217	1246
14 / 356	18 / 457	42 / 1067	1522	1522	1553
14 / 356	18 / 457	48 / 1219	1604	1604	1636
14 / 356	18 / 457	54 / 1372	1685	1685	1775
14 / 356	18 / 457	60 / 1524	1766	1766	1865
14 / 356	18 / 457	66 / 1676	1846	1846	1955
14 / 356	18 / 457	72 / 1829	1926	1926	2045
14 / 356	24 / 610	24 / 610	1172	1172	1211
14 / 356	24 / 610	30 / 762	1250	1250	1291
14 / 356	24 / 610	36 / 914	1333	1333	1372
14 / 356	24 / 610	42 / 1067	1639	1639	1680
14 / 356	24 / 610	48 / 1219	1719	1719	1760
14 / 356	24 / 610	54 / 1372	1801	1801	1892
14 / 356	24 / 610	60 / 1524	1883	1883	1982
14 / 356	24 / 610	66 / 1676	1963	1963	2072
14 / 356	24 / 610	72 / 1829	2043	2043	2162
			TWO FEET (T)		
14 / 356	18 / 457	24 / 610	1247	1247	1278
14 / 356	18 / 457	30 / 762	1329	1329	1361
14 / 356	18 / 457	36 / 914	1411	1411	1441
14 / 356	18 / 457	42 / 1067	1717	1717	1747
14 / 356	18 / 457	48 / 1219	1799	1799	1829
14 / 356	18 / 457	54 / 1372	1878	1878	1969
14 / 356	18 / 457	60 / 1524	1960	1960	2060
14 / 356	18 / 457	66 / 1676	2040	2040	2151
14 / 356	18 / 457	72 / 1829	2122	2122	2241
14 / 356	24 / 610	24 / 610	1364	1364	1405
14 / 356	24 / 610	30 / 762	1444	1444	1485
14 / 356	24 / 610	36 / 914	1528	1528	1567
14 / 356	24 / 610	42 / 1067	1834	1834	1873
14 / 356	24 / 610	48 / 1219	1914	1914	1953
14 / 356	24 / 610	54 / 1372	1995	1995	2086
14 / 356	24 / 610	60 / 1524	2075	2075	2175
14 / 356	24 / 610	66 / 1676	2156	2156	2268
14 / 356	24 / 610	72 / 1829	2239	2239	2357

EZ compatible

JNBSO

Suspended Credenza – Open with Lateral File

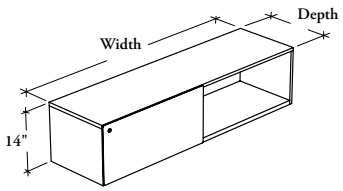

This storage must be installed on-module, between two structural legs and on front of a structural beam, to provide filing and open storage.

WHAT'S INCLUDED

1 credenza, 1 drawer, lock and keys (as specified), mounting hardware and accessories listed below:

	Width		
	42" to 54"	60" to 84"	
12" Hanging File Bar	1	2	(if 18" depth)
15" Hanging File Bar	1	2	(if 24" depth)

WHAT'S EXCLUDED

Structural Beam, Chicago Structural Beam, EZ Fence Beam, Chicago EZ Fence Beam, EZ Fence Beam for Corridor, Chicago EZ Fence Beam for Corridor, EZ Structural Legs, Structural Legs and File Drawer Organizer.

NOTES

Included hanging file bars are to be installed along the depth only.

Beam Configuration must match the beam on which the storage will be mounted.

The Support Mounting Hardware Finish can be specified to match the case or the leg to which the storage is mounted to. See the application guide section for details.

When Front Style (M or N) is specified, only Metal Drawer Front Finish is available.

When Front Style (S or T) is specified, only Laminate Drawer Front Finish is available.

When Front Style (M or S) is specified, Pull Style and Pull Finish are **not** available.

PRODUCT OPTIONS

Front Style	Structural Leg Style	Case Height	Depth	Width	Width Reduction	Beam Configuration
M Metal (Shown)	**A** Angled	**14** 14" (Datum Height 24")	18, 24	42, 48, 54, 60, 66, 72, 78, 84	**FF** Full Legs	**D** Double-Sided
N Metal with Pull					**FH** Full/Shared Legs	**S** Single-Sided
S Solid					**HH** Shared Legs_ None/Full Leg	
T Solid with Pull					**NH** None/Shared Leg	
					NN None Leg	

SAMPLE ORDER CODE

JNBSO S	A	14	18	72	HH	D

PRODUCT OPTIONS CONTINUED

Orientation	Front Finish	Edge Trim Finish (for Laminate Front only)	Case Finish	Pull Style (for Front Style (N or T) only)	Pull Finish (for Front Style (N or T) only)	Key Style	Support Mounting Hardware Finish
L Drawer on Left (Shown)	**Metal Front:** (for metal front style)	Edge Trim Colors	Source Laminate	**C** Cityline Recessed	Foundation	**K** Keyed Alike	Foundation
R Drawer on Right	Foundation				Mica	**R** Keyed Randomly	Mica
	Mica				Accent	**N** No Lock	Accent
	Accent						Coordinate Colors
	Laminate Front: (for solid front style)						
	Source Laminate						
	Foundation Laminate						

SAMPLE ORDER CODE

L	3D	4D	3D			R	60

See Pricing on the following page.

JNBSO

Suspended Credenza – Open with Lateral File (Continued)

DIMENSIONS INCHES / MM			PRICING		
			METAL FRONT (M) or METAL FRONT WITH PULL (N)	SOLID FRONT (S) or SOLID FRONT WITH PULL (T)	
H	D	W		Source Laminate	Foundation Laminate
14 / 356	18 / 457	42 / 1067	954	954	974
14 / 356	18 / 457	48 / 1219	1071	1071	1102
14 / 356	18 / 457	54 / 1372	1189	1189	1231
14 / 356	18 / 457	60 / 1524	1307	1307	1357
14 / 356	18 / 457	66 / 1676	1424	1424	1485
14 / 356	18 / 457	72 / 1829	1531	1531	1592
14 / 356	18 / 457	78 / 1981	1639	1639	1698
14 / 356	18 / 457	84 / 2134	1747	1747	1807
14 / 356	24 / 610	42 / 1067	1070	1070	1090
14 / 356	24 / 610	48 / 1219	1188	1188	1218
14 / 356	24 / 610	54 / 1372	1306	1306	1346
14 / 356	24 / 610	60 / 1524	1422	1422	1472
14 / 356	24 / 610	66 / 1676	1540	1540	1600
14 / 356	24 / 610	72 / 1829	1647	1647	1709
14 / 356	24 / 610	78 / 1981	1755	1755	1814
14 / 356	24 / 610	84 / 2134	1862	1862	1922

EZ compatible

JNBDO

Semi-Suspended Credenza – Open with Lateral File

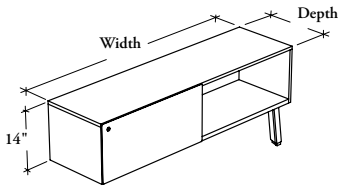

This storage is semi-supported, so it must be installed on front of a structural beam to provide filing and open storage.

WHAT'S INCLUDED

1 credenza, 1 drawer, angled foot with leveler (as specified), lock and keys (as specified), mounting hardware and accessories listed below:

	Width		
	42" to 54"	60" to 84"	
12" Hanging File Bar	1	2	(if 18" depth)
15" Hanging File Bar	1	2	(if 24" depth)

WHAT'S EXCLUDED

Structural Beam, Chicago Structural Beam, EZ Fence Beam, Chicago EZ Fence Beam, EZ Fence Beam for Corridor, Chicago EZ Fence Beam for Corridor, EZ Structural Legs, Structural Legs and File Drawer Organizer.

NOTES

Included hanging file bars are to be installed along the depth only.

Beam Configuration must match the beam on which the storage will be mounted.

The Support Mounting Hardware Finish can be specified to match the case or the leg to which the storage is mounted to. See the application guide section for details.

When Front Style (M or N) is specified, only Metal Drawer Front Finish is available.

When Front Style (S or T) is specified, only Laminate Drawer Front Finish is available.

When Front Style (M or S) is specified, Pull Style and Pull Finish are **not** available.

PRODUCT OPTIONS

Front Style	Foot and Structural Leg Style	Case Height	Depth	Width	Foot Option	Beam Configuration	Orientation
M Metal (Shown)	**A** Angled	**14** 14" (Datum Height 24")	18, 24	42, 48, 54, 60, 66, 72, 78, 84	**O** One Foot (Shown)	**D** Double-Sided	**L** Drawer on Left (Shown)
N Metal with Pull					**T** Two Feet	**S** Single-Sided	**R** Drawer on Right
S Solid							
T Solid with Pull							

SAMPLE ORDER CODE

JNBDO S	A	14	18	72	O	D	L

PRODUCT OPTIONS CONTINUED

Front Finish	Edge Trim Finish (for Laminate Front only)	Case Finish	Foot Finish	Pull Style (for Front Style (N or T) only)	Pull Finish (for Front Style (N or T) only)	Key Style	Support Mounting Hardware Finish
Metal Front: (for metal front style)	Edge Trim Colors	Source Laminate	Foundation	**C** Cityline Recessed	Foundation	**K** Keyed Alike	Foundation
Foundation			Mica		Mica	**R** Keyed Randomly	Mica
Mica			Accent		Accent	**N** No Lock	Accent
Accent							Coordinate Colors
Laminate Front: (for solid front style)							
Source Laminate							
Foundation Laminate							

SAMPLE ORDER CODE CONTINUED

3D	4D	3D	60			R	60

See Pricing on the following page.

JNBDO

Semi-Suspended Credenza – Open with Lateral File (Continued)

DIMENSIONS INCHES / MM			PRICING		
			ONE FOOT (O)		
			METAL FRONT (M) or METAL FRONT WITH PULL (N)	SOLID FRONT (S) or SOLID FRONT WITH PULL (T)	
				Source Laminate	Foundation Laminate
H	D	W			
14 / 356	18 / 457	42 / 1067	1147	1147	1168
14 / 356	18 / 457	48 / 1219	1266	1266	1296
14 / 356	18 / 457	54 / 1372	1383	1383	1422
14 / 356	18 / 457	60 / 1524	1500	1500	1550
14 / 356	18 / 457	66 / 1676	1617	1617	1677
14 / 356	18 / 457	72 / 1829	1725	1725	1786
14 / 356	18 / 457	78 / 1981	1833	1833	1892
14 / 356	18 / 457	84 / 2134	1938	1938	1999
14 / 356	24 / 610	42 / 1067	1264	1264	1285
14 / 356	24 / 610	48 / 1219	1383	1383	1413
14 / 356	24 / 610	54 / 1372	1499	1499	1538
14 / 356	24 / 610	60 / 1524	1616	1616	1667
14 / 356	24 / 610	66 / 1676	1732	1732	1793
14 / 356	24 / 610	72 / 1829	1840	1840	1899
14 / 356	24 / 610	78 / 1981	1948	1948	2009
14 / 356	24 / 610	84 / 2134	2054	2054	2116
			TWO FEET (T)		
14 / 356	18 / 457	42 / 1067	1342	1342	1363
14 / 356	18 / 457	48 / 1219	1460	1460	1491
14 / 356	18 / 457	54 / 1372	1574	1574	1616
14 / 356	18 / 457	60 / 1524	1692	1692	1743
14 / 356	18 / 457	66 / 1676	1812	1812	1872
14 / 356	18 / 457	72 / 1829	1920	1920	1979
14 / 356	18 / 457	78 / 1981	2024	2024	2086
14 / 356	18 / 457	84 / 2134	2133	2133	2192
14 / 356	24 / 610	42 / 1067	1459	1459	1480
14 / 356	24 / 610	48 / 1219	1576	1576	1608
14 / 356	24 / 610	54 / 1372	1691	1691	1732
14 / 356	24 / 610	60 / 1524	1810	1810	1861
14 / 356	24 / 610	66 / 1676	1926	1926	1986
14 / 356	24 / 610	72 / 1829	2036	2036	2095
14 / 356	24 / 610	78 / 1981	2141	2141	2202
14 / 356	24 / 610	84 / 2134	2249	2249	2310

EZ compatible

JNBSOO
Suspended Credenza – Open

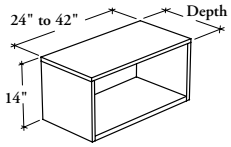

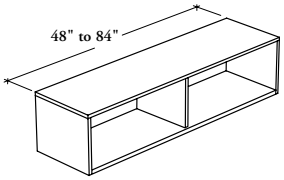

This storage must be installed on-module, between two structural legs and on front of a structural beam, to provide open storage.

WHAT'S INCLUDED
1 credenza, 1 divider (as specified), mounting hardware and open compartments listed below:

	Width	
	24" to 42"	48" to 84"
Open Compartment	1	2

WHAT'S EXCLUDED
Structural Beam, Chicago Structural Beam, EZ Fence Beam, Chicago EZ Fence Beam, EZ Fence Beam for Corridor, Chicago EZ Fence Beam for Corridor, EZ Structural Legs and Structural Legs.

NOTES
Beam Configuration must match the beam on which the storage will be mounted.

The Support Mounting Hardware Finish can be specified to match the case or the leg to which the storage is mounted to. See the application guide section for details.

PRODUCT OPTIONS

Structural Leg Style	Case Height	Depth	Width
A Angled	**14** 14" (Datum Height 24")	18, 24	24, 30, 36, 42, 48, 54, 60, 66, 72, 78, 84

SAMPLE ORDER CODE

JNBSOO A	14	18	54

PRODUCT OPTIONS CONTINUED

Width Reduction	Beam Configuration	Case Finish	Support Mounting Hardware Finish
FF Full Legs	**D** Double-Sided	Source Laminate	Foundation
FH Full/Shared Legs	**S** Single-Sided		Mica
HH Shared Legs_None/Full Leg			Accent
NH None/Shared Leg			Coordinate Colors
NN None Leg			

SAMPLE ORDER CODE

FF	D	3D	60

See Pricing on the following page.

JNBSOO

Suspended Credenza – Open (Continued)

DIMENSIONS INCHES / MM			PRICING
H	D	W	
14 / 356	18 / 457	24 / 610	610
14 / 356	18 / 457	30 / 762	665
14 / 356	18 / 457	36 / 914	708
14 / 356	18 / 457	42 / 1067	796
14 / 356	18 / 457	48 / 1219	831
14 / 356	18 / 457	54 / 1372	865
14 / 356	18 / 457	60 / 1524	912
14 / 356	18 / 457	66 / 1676	958
14 / 356	18 / 457	72 / 1829	1003
14 / 356	18 / 457	78 / 1981	1051
14 / 356	18 / 457	84 / 2134	1095
14 / 356	24 / 610	24 / 610	691
14 / 356	24 / 610	30 / 762	753
14 / 356	24 / 610	36 / 914	814
14 / 356	24 / 610	42 / 1067	908
14 / 356	24 / 610	48 / 1219	949
14 / 356	24 / 610	54 / 1372	989
14 / 356	24 / 610	60 / 1524	1041
14 / 356	24 / 610	66 / 1676	1093
14 / 356	24 / 610	72 / 1829	1146
14 / 356	24 / 610	78 / 1981	1197
14 / 356	24 / 610	84 / 2134	1249

EZ compatible

J N B D O O

Semi-Suspended Credenza – Open

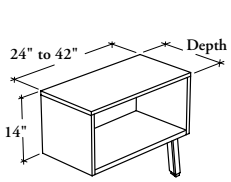

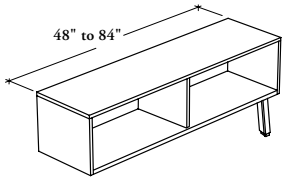

This storage is semi-supported, so it must be installed on front of a structural beam to provide open storage.

WHAT'S INCLUDED

1 credenza, angled foot with leveler (as specified), 1 divider (as specified), mounting hardware and open compartments listed below:

	Width	
	24" to 42"	48" to 84"
Open Compartment	1	2

WHAT'S EXCLUDED

Structural Beam, Chicago Structural Beam, EZ Fence Beam, Chicago EZ Fence Beam, EZ Fence Beam for Corridor, Chicago EZ Fence Beam for Corridor, EZ Structural Legs and Structural Legs.

NOTES

Beam Configuration must match the beam on which the storage will be mounted.

The Support Mounting Hardware Finish can be specified to match the case or the leg to which the storage is mounted to. See the application guide section for details.

PRODUCT OPTIONS

Foot and Structural Leg Style	Case Height	Depth	Width	Foot Option
A Angled	**14** 14" (Datum Height 24")	18, 24	24, 30, 36, 42, 48, 54, 60, 66, 72, 78, 84	**O** One Foot **T** Two Feet

SAMPLE ORDER CODE

JNBDOO A	14	18	54	O

PRODUCT OPTIONS CONTINUED

Beam Configuration	Case Finish	Foot Finish	Support Mounting Hardware Finish
D Double-Sided	Source Laminate	Foundation	Foundation
S Single-Sided		Mica	Mica
		Accent	Accent
			Coordinate Colors

SAMPLE ORDER CODE

D	3D	60	60

See Pricing on the following page.

J N B D O O

Semi-Suspended Credenza – Open (Continued)

DIMENSIONS INCHES / MM			PRICING
H	D	W	ONE FOOT (O)
14 / 356	18 / 457	24 / 610	803
14 / 356	18 / 457	30 / 762	858
14 / 356	18 / 457	36 / 914	902
14 / 356	18 / 457	42 / 1067	989
14 / 356	18 / 457	48 / 1219	1027
14 / 356	18 / 457	54 / 1372	1060
14 / 356	18 / 457	60 / 1524	1107
14 / 356	18 / 457	66 / 1676	1152
14 / 356	18 / 457	72 / 1829	1197
14 / 356	18 / 457	78 / 1981	1244
14 / 356	18 / 457	84 / 2134	1290
14 / 356	24 / 610	24 / 610	886
14 / 356	24 / 610	30 / 762	947
14 / 356	24 / 610	36 / 914	1009
14 / 356	24 / 610	42 / 1067	1102
14 / 356	24 / 610	48 / 1219	1144
14 / 356	24 / 610	54 / 1372	1184
14 / 356	24 / 610	60 / 1524	1235
14 / 356	24 / 610	66 / 1676	1286
14 / 356	24 / 610	72 / 1829	1341
14 / 356	24 / 610	78 / 1981	1392
14 / 356	24 / 610	84 / 2134	1443
			TWO FEET (T)
14 / 356	18 / 457	24 / 610	803
14 / 356	18 / 457	30 / 762	858
14 / 356	18 / 457	36 / 914	902
14 / 356	18 / 457	42 / 1067	989
14 / 356	18 / 457	48 / 1219	1027
14 / 356	18 / 457	54 / 1372	1060
14 / 356	18 / 457	60 / 1524	1107
14 / 356	18 / 457	66 / 1676	1152
14 / 356	18 / 457	72 / 1829	1197
14 / 356	18 / 457	78 / 1981	1244
14 / 356	18 / 457	84 / 2134	1290
14 / 356	24 / 610	24 / 610	886
14 / 356	24 / 610	30 / 762	947
14 / 356	24 / 610	36 / 914	1009
14 / 356	24 / 610	42 / 1067	1102
14 / 356	24 / 610	48 / 1219	1144
14 / 356	24 / 610	54 / 1372	1184
14 / 356	24 / 610	60 / 1524	1235
14 / 356	24 / 610	66 / 1676	1286
14 / 356	24 / 610	72 / 1829	1341
14 / 356	24 / 610	78 / 1981	1392
14 / 356	24 / 610	84 / 2134	1443

EZ compatible

J N B S C

Suspended Credenza – Open with Combo File

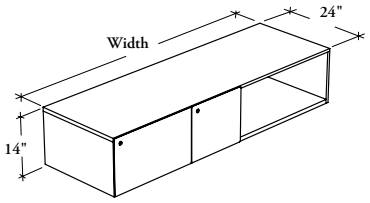

This storage must be installed on-module, between two structural legs and on front of a structural beam, to provide filing, personal and open storage.

WHAT'S INCLUDED

1 credenza, 1 large and 1 small drawers, lock and keys (as specified), mounting hardware and accessories listed below:

	Width				
	54" to 72"		78" or 84"		
	18"	24"	18"	24"	Depth
12" Hang. File Bar	1	1	2	1	
15" Hang. File Bar	n/a	1	n/a	2	

WHAT'S EXCLUDED

Structural Beam, Chicago Structural Beam, EZ Fence Beam, Chicago EZ Fence Beam, EZ Fence Beam for Corridor, Chicago EZ Fence Beam for Corridor, EZ Structural Legs, Structural Legs and File Drawer Organizers.

NOTES

Small drawer of 18" deep configuration can only store letter size files.

Beam Configuration must match the beam on which the storage will be mounted.

This storage unit is equipped with an interlock system that prevents opening more than one drawer at a time.

The Support Mounting Hardware Finish can be specified to match the case or the leg to which the storage is mounted to. See the application guide section for details.

When Front Style (M or N) is specified, only Metal Drawer Front Finish is available.

When Front Style (S or T) is specified, only Laminate Drawer Front Finish is available.

When Front Style (M or S) is specified, Pull Style and Pull Finish are **not** available.

PRODUCT OPTIONS

Front Style	Structural Leg Style	Case Height	Depth	Width	Width Reduction	Beam Configuration
M Metal (Shown)	**A** Angled	**14** 14" (Datum Height 24")	18, 24	54, 60, 66, 72, 78, 84	**FF** Full Legs	**D** Double-Sided
N Metal with Pull					**FH** Full/Shared Legs	**S** Single-Sided
S Solid					**HH** Shared Legs_ None/Full Leg	
T Solid with Pull					**NH** None/Shared Leg	
					NN None Leg	

SAMPLE ORDER CODE

JNBSC S	A	14	18	72	HH	D

PRODUCT OPTIONS CONTINUED

Orientation	Front Finish	Edge Trim Finish (for Laminate Front only)	Case Finish	Pull Style (for Front Style (N or T) only)	Pull Finish (for Front Style (N or T) only)	Key Style	Support Mounting Hardware Finish
L Drawers on Left (Shown)	**Metal Front:** (for metal front style)	Edge Trim Colors	Source Laminate	**C** Cityline Recessed	Foundation	**K** Keyed Alike	Foundation
R Drawers on Right	Foundation				Mica	**R** Keyed Randomly	Mica
	Mica				Accent	**N** No Lock	Accent
	Accent						Coordinate Colors
	Laminate Front: (for solid front style)						
	Source Laminate						
	Foundation Laminate						

SAMPLE ORDER CODE

L	3D	4D	3D			R	60

See Pricing on the following page.

JNBSC

Suspended Credenza – Open with Combo File (Continued)

DIMENSIONS INCHES / MM			PRICING		
			METAL FRONT (M) or METAL FRONT WITH PULL (N)	SOLID FRONT (S) or SOLID FRONT WITH PULL (T)	
H	D	W		Source Laminate	Foundation Laminate
14 / 356	18 / 457	54 / 1372	1278	1278	1310
14 / 356	18 / 457	60 / 1524	1467	1467	1510
14 / 356	18 / 457	66 / 1676	1656	1656	1711
14 / 356	18 / 457	72 / 1829	1844	1844	1909
14 / 356	18 / 457	78 / 1981	2035	2035	2110
14 / 356	18 / 457	84 / 2134	2223	2223	2310
14 / 356	24 / 610	54 / 1372	1394	1394	1427
14 / 356	24 / 610	60 / 1524	1583	1583	1626
14 / 356	24 / 610	66 / 1676	1772	1772	1826
14 / 356	24 / 610	72 / 1829	1962	1962	2025
14 / 356	24 / 610	78 / 1981	2151	2151	2226
14 / 356	24 / 610	84 / 2134	2340	2340	2426

EZ compatible

J N B D C

Semi-Suspended Credenza – Open with Combo File

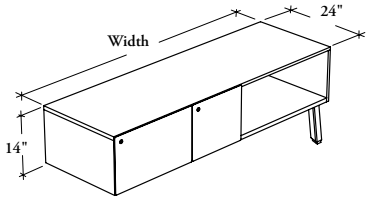

This storage is semi-supported, so it must be installed on front of a structural beam to provide filing, personal and open storage.

WHAT'S INCLUDED

1 credenza, 1 large and 1 small drawers, angled foot with leveler (as specified), lock and keys (as specified), mounting hardware and accessories listed below:

	Width				
	54" to 72"		78" or 84"		
	18"	**24"**	**18"**	**24"**	**Depth**
12" Hang. File Bar	1	1	2	1	
15" Hang. File Bar	n/a	1	n/a	2	

WHAT'S EXCLUDED

Structural Beam, Chicago Structural Beam, EZ Fence Beam, Chicago EZ Fence Beam, EZ Fence Beam for Corridor, Chicago EZ Fence Beam for Corridor, EZ Structural Legs, Structural Legs and File Drawer Organizer.

NOTES

Small drawer of 18" deep configuration can only store letter size files.

Beam Configuration must match the beam on which the storage will be mounted.

This storage unit is equipped with an interlock system that prevents opening more than one drawer at a time.

The Support Mounting Hardware Finish can be specified to match the case or the leg to which the storage is mounted to. See the application guide section for details.

When Front Style (M or N) is specified, only Metal Drawer Front Finish is available.

When Front Style (S or T) is specified, only Laminate Drawer Front Finish is available.

When Front Style (M or S) is specified, Pull Style and Pull Finish are **not** available.

PRODUCT OPTIONS

Front Style	Foot and Structural Leg Style	Case Height	Depth	Width	Foot Option	Beam Configuration	Orientation
M Metal (Shown) **N** Metal with Pull **S** Solid **T** Solid with Pull	**A** Angled	**14** 14" (Datum Height 24")	18, 24	54, 60, 66, 72, 78, 84	**O** One Foot (Shown) **T** Two Feet	**D** Double-Sided **S** Single-Sided	**L** Drawers on Left (Shown) **R** Drawers on Right

SAMPLE ORDER CODE

JNBDC S	A	14	24	72	O	D	L

PRODUCT OPTIONS CONTINUED

Front Finish	Edge Trim Finish (for Laminate Front only)	Case Finish	Foot Finish	Pull Style (for Front Style (N or T) only)	Pull Finish (for Front Style (N or T) only)	Key Style	Support Mounting Hardware Finish
Metal Front: (for metal front style) Foundation Mica Accent **Laminate Front:** (for solid front style) Source Laminate Foundation Laminate	Edge Trim Colors	Source Laminate	Foundation Mica Accent	**C** Cityline Recessed	Foundation Mica Accent	**K** Keyed Alike **R** Keyed Randomly **N** No Lock	Foundation Mica Accent Coordinate Colors

SAMPLE ORDER CODE CONTINUED

XM	SB	XM	83			R	60

See Pricing on the following page.

J N B D C

Semi-Suspended Credenza – Open with Combo File (Continued)

DIMENSIONS INCHES / MM			PRICING		
			ONE FOOT (O)		
			METAL FRONT (M) or METAL FRONT WITH PULL (N)	SOLID FRONT (S) or SOLID FRONT WITH PULL (T)	
H	D	W		Source Laminate	Foundation Laminate
14 / 356	18 / 457	54 / 1372	1472	1472	1505
14 / 356	18 / 457	60 / 1524	1661	1661	1705
14 / 356	18 / 457	66 / 1676	1849	1849	1904
14 / 356	18 / 457	72 / 1829	2039	2039	2103
14 / 356	18 / 457	78 / 1981	2227	2227	2304
14 / 356	18 / 457	84 / 2134	2419	2419	2504
14 / 356	24 / 610	54 / 1372	1589	1589	1621
14 / 356	24 / 610	60 / 1524	1777	1777	1820
14 / 356	24 / 610	66 / 1676	1966	1966	2021
14 / 356	24 / 610	72 / 1829	2153	2153	2228
14 / 356	24 / 610	78 / 1981	2343	2343	2420
14 / 356	24 / 610	84 / 2134	2533	2533	2609
			TWO FEET (T)		
14 / 356	18 / 457	54 / 1372	1667	1667	1698
14 / 356	18 / 457	60 / 1524	1856	1856	1898
14 / 356	18 / 457	66 / 1676	2044	2044	2098
14 / 356	18 / 457	72 / 1829	2232	2232	2299
14 / 356	18 / 457	78 / 1981	2422	2422	2497
14 / 356	18 / 457	84 / 2134	2612	2612	2698
14 / 356	24 / 610	54 / 1372	1784	1784	1815
14 / 356	24 / 610	60 / 1524	1972	1972	2015
14 / 356	24 / 610	66 / 1676	2161	2161	2216
14 / 356	24 / 610	72 / 1829	2347	2347	2423
14 / 356	24 / 610	78 / 1981	2538	2538	2613
14 / 356	24 / 610	84 / 2134	2726	2726	2803

J N B S H
Suspended Shelf – Solid

This shelf provides a convenient storage space below the structural beam.

WHAT'S INCLUDED
1 shelf, reinforcing bar (when required) and mounting hardware.

WHAT'S EXCLUDED
Structural Beam, Chicago Structural Beam and Structural Leg – Fence.

NOTES
Specify the width according to the width of the Structural Beam under which the shelf is installed.

Can be mounted only on Structural Leg – Fence (JNDLF).

Comes with curved corner only.

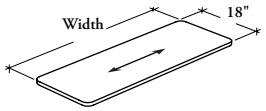

PRODUCT OPTIONS

Depth	Width	Width Reduction	Finish	Hardware Finish
18	24, 30, 36, 42, 48, 54, 60, 66, 72, 84	**FF** Full Legs (Shown) **FH** Full/Shared Legs (Non-Handed) **HH** Shared Legs	Source Laminate	Foundation Mica Accent

SAMPLE ORDER CODE

JNBSH 18	24	FF	3D	53

DIMENSIONS
INCHES / MM

D	W
18 / 457	24 / 610
18 / 457	30 / 762
18 / 457	36 / 914
18 / 457	42 / 1067
18 / 457	48 / 1219
18 / 457	54 / 1372
18 / 457	60 / 1524
18 / 457	66 / 1676
18 / 457	72 / 1829
18 / 457	78 / 1981
18 / 457	84 / 2134

PRICING

229
255
283
311
336
363
391
416
443
471
501

JNBBW
Beam-Mounted Shelf

This straight surface is used to provide a casual worksurface space when mounted on the structural beam at worksurface-level.

WHAT'S INCLUDED
1 shelf and mounting hardware.

WHAT'S EXCLUDED
Structural Beam, Chicago Structural Beam, Structural Legs – Fence and Structural Beam Cover – Top.

NOTES
Please refer to the Application Guide for compatibility and specification.

Comes with curved corner only.

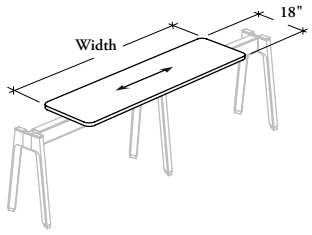

PRODUCT OPTIONS

Depth	Width	Finish
18	24, 30, 36, 42, 48, 54, 60, 66, 72, 84	Source Laminate

SAMPLE ORDER CODE

JNBBW 18	**66**	**3D**

DIMENSIONS INCHES / MM

D	W	PRICING
18 / 457	24 / 610	229
18 / 457	30 / 762	255
18 / 457	36 / 914	283
18 / 457	42 / 1067	311
18 / 457	48 / 1219	336
18 / 457	54 / 1372	363
18 / 457	60 / 1524	391
18 / 457	66 / 1676	416
18 / 457	72 / 1829	443
18 / 457	78 / 1981	471
18 / 457	84 / 2134	501

J N B B L O
Beam-Mounted Cabinet – Open

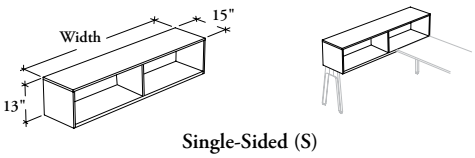

Single-Sided (S)

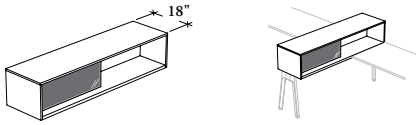

Shared – Open on Left or Right (Shown) (L or R)

This cabinet provides a lateral open storage, space division and casual stand-up meeting space between two worksurfaces or at the end of a workstation.

WHAT'S INCLUDED
1 cabinet, 1 back fascia (if single-sided) or 1 back fascia behind each compartment (if shared) (as specified), 1 divider (if single-sided), 8 rare earth magnets (with magnetic glass only) and mounting hardware.

WHAT'S EXCLUDED
Worksurfaces, Structural Beam, Chicago Structural Beam, Structural Posts and Structural Leg – Beam-Mounted Cabinet.

NOTES
The Single-Sided Orientation (S) is available 15" deep only.

The Shared – Open on Left or Right Orientation (L or R) is available 18" deep only.

Stitches Finish is only available when the Fascia Finish – Felt option is specified.

PRODUCT OPTIONS

Fascia Option	Structural Leg Style	Height	Depth	Width	Orientation	Case Finish	Fascia Finish (If Applicable)	Stitches Finish (If Applicable)
E Felt Tackboard	**A** Angled (Not included)	13	15, 18	48, 54, 60, 66, 72, 78, 84	**L** Shared – Open on Left	Source Laminate	Felt	**C** Carbon Coordinate
F Fabric Tackboard					**R** Shared – Open on Right		Fabric	**E** Shale Coordinate
M Magnetic Glass (Shown)					**S** Single-Sided		Back-Painted	**G** Carrara Coordinate
N No Fascia								**M** Umber Coordinate

SAMPLE ORDER CODE

JNBBLO N	A	13	18	48	L	3D		

DIMENSIONS
INCHES / MM

PRICING

H	D	W	NO FASCIA (N) SINGLE-SIDED (S)	NO FASCIA (N) SHARED – OPEN ON LEFT OR RIGHT (L or R)
13 / 330	15 / 381	48 / 1219	748	n/a
13 / 330	15 / 381	54 / 1372	811	n/a
13 / 330	15 / 381	60 / 1524	872	n/a
13 / 330	15 / 381	66 / 1676	935	n/a
13 / 330	15 / 381	72 / 1829	995	n/a
13 / 330	15 / 381	78 / 1981	1058	n/a
13 / 330	15 / 381	84 / 2134	1117	n/a
13 / 330	18 / 457	48 / 1219	n/a	811
13 / 330	18 / 457	54 / 1372	n/a	867
13 / 330	18 / 457	60 / 1524	n/a	925
13 / 330	18 / 457	66 / 1676	n/a	981
13 / 330	18 / 457	72 / 1829	n/a	1038
13 / 330	18 / 457	78 / 1981	n/a	1095
13 / 330	18 / 457	84 / 2134	n/a	1153

Pricing is continued on the following page.

JNBBLO
Beam-Mounted Cabinet – Open (Continued)

DIMENSIONS INCHES / MM

PRICING

FABRIC TACKBOARD (F)

SINGLE-SIDED (S)

H	D	W	Gr. A/ COM	Gr. 1	Gr. 2	Gr. 3	Gr.4	Gr. 5	Gr. 6	Gr. 7
13 / 330	15 / 381	48 / 1219	886	893	909	918	931	944	955	966
13 / 330	15 / 381	54 / 1372	964	973	989	1001	1015	1030	1041	1054
13 / 330	15 / 381	60 / 1524	1042	1053	1071	1083	1099	1115	1128	1139
13 / 330	15 / 381	66 / 1676	1119	1131	1152	1165	1182	1201	1212	1227
13 / 330	15 / 381	72 / 1829	1197	1209	1233	1246	1266	1284	1298	1314
13 / 330	15 / 381	78 / 1981	1277	1288	1313	1328	1349	1368	1385	1400
13 / 330	15 / 381	84 / 2134	1354	1365	1392	1409	1431	1452	1470	1486
13 / 330	18 / 457	48 / 1219	n/a	n/a	n/a	n/a	n/a	n/a	n/a	n/a
13 / 330	18 / 457	54 / 1372	n/a	n/a	n/a	n/a	n/a	n/a	n/a	n/a
13 / 330	18 / 457	60 / 1524	n/a	n/a	n/a	n/a	n/a	n/a	n/a	n/a
13 / 330	18 / 457	66 / 1676	n/a	n/a	n/a	n/a	n/a	n/a	n/a	n/a
13 / 330	18 / 457	72 / 1829	n/a	n/a	n/a	n/a	n/a	n/a	n/a	n/a
13 / 330	18 / 457	78 / 1981	n/a	n/a	n/a	n/a	n/a	n/a	n/a	n/a
13 / 330	18 / 457	84 / 2134	n/a	n/a	n/a	n/a	n/a	n/a	n/a	n/a

SHARED – OPEN ON LEFT OR RIGHT (L or R)

Gr. A/ COM	Gr. 1	Gr. 2	Gr. 3	Gr.4	Gr. 5	Gr. 6	Gr. 7
n/a	n/a	n/a	n/a	n/a	n/a	n/a	n/a
n/a	n/a	n/a	n/a	n/a	n/a	n/a	n/a
n/a	n/a	n/a	n/a	n/a	n/a	n/a	n/a
n/a	n/a	n/a	n/a	n/a	n/a	n/a	n/a
n/a	n/a	n/a	n/a	n/a	n/a	n/a	n/a
n/a	n/a	n/a	n/a	n/a	n/a	n/a	n/a
n/a	n/a	n/a	n/a	n/a	n/a	n/a	n/a
976	983	999	1009	1023	1034	1043	1056
1042	1053	1068	1080	1094	1109	1119	1132
1110	1118	1139	1151	1167	1182	1195	1206
1179	1188	1209	1221	1240	1257	1269	1284
1260	1269	1293	1307	1326	1344	1358	1373
1328	1341	1364	1382	1401	1421	1436	1452
1397	1411	1436	1453	1474	1495	1514	1531

FELT TACKBOARD (E)

H	D	W		
13 / 330	15 / 381	48 / 1219	930	n/a
13 / 330	15 / 381	54 / 1372	1014	n/a
13 / 330	15 / 381	60 / 1524	1100	n/a
13 / 330	15 / 381	66 / 1676	1184	n/a
13 / 330	15 / 381	72 / 1829	1268	n/a
13 / 330	15 / 381	78 / 1981	1354	n/a
13 / 330	15 / 381	84 / 2134	1434	n/a
13 / 330	18 / 457	48 / 1219	n/a	991
13 / 330	18 / 457	54 / 1372	n/a	1071
13 / 330	18 / 457	60 / 1524	n/a	1151
13 / 330	18 / 457	66 / 1676	n/a	1232
13 / 330	18 / 457	72 / 1829	n/a	1312
13 / 330	18 / 457	78 / 1981	n/a	1392
13 / 330	18 / 457	84 / 2134	n/a	1470

MAGNETIC GLASS (M)

H	D	W	Back-Painted	Back-Painted
13 / 330	15 / 381	48 / 1219	1354	n/a
13 / 330	15 / 381	54 / 1372	1509	n/a
13 / 330	15 / 381	60 / 1524	1625	n/a
13 / 330	15 / 381	66 / 1676	1739	n/a
13 / 330	15 / 381	72 / 1829	1856	n/a
13 / 330	15 / 381	78 / 1981	1972	n/a
13 / 330	15 / 381	84 / 2134	2085	n/a
13 / 330	18 / 457	48 / 1219	n/a	1648
13 / 330	18 / 457	54 / 1372	n/a	1735
13 / 330	18 / 457	60 / 1524	n/a	1819
13 / 330	18 / 457	66 / 1676	n/a	1927
13 / 330	18 / 457	72 / 1829	n/a	2037
13 / 330	18 / 457	78 / 1981	n/a	2145
13 / 330	18 / 457	84 / 2134	n/a	2256

J N B D L O
Lateral Hang-On Cabinet – Open

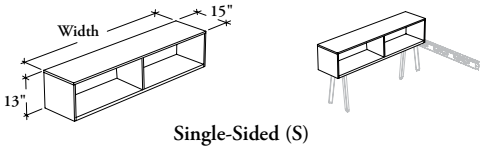

Single-Sided (S)

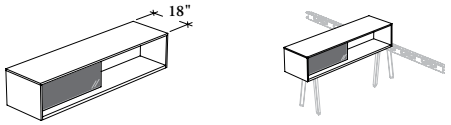

Shared – Open on Left or Right (Shown) (L or R)

This cabinet provides a lateral open storage, space division and casual stand-up meeting space.

WHAT'S INCLUDED
1 cabinet, 1 back fascia (if single-sided) or 1 back fascia behind each compartment (if shared) (as specified), 1 divider (if single-sided), 8 rare earth magnets (with magnetic glass only) and mounting hardware.

WHAT'S EXCLUDED
Worksurfaces, Structural Beam, Chicago Structural Beam, Structural Legs and Freestanding Leg – Lateral Cabinet.

NOTES
The Single-Sided Orientation (S) is available 15" deep only.

The Shared – Open on Left or Right Orientation (L or R) is available 18" deep only.

Stitches Finish is only available when the Fascia Finish – Felt option is specified.

PRODUCT OPTIONS

Fascia Option	Freestanding Leg Style	Height	Depth	Width	Orientation	Case Finish	Fascia Finish (If Applicable)	Stitches Finish (If Applicable)
E Felt Tackboard	**A** Angled (Not included)	13	15, 18	48, 54, 60, 66, 72, 78, 84	**L** Shared – Open on Left	Source Laminate	Felt	**C** Carbon Coordinate
F Fabric Tackboard					**R** Shared – Open on Right		Fabric	**E** Shale Coordinate
M Magnetic Glass (Shown)					**S** Single-Sided		Back-Painted	**G** Carrara Coordinate
N No Fascia								**M** Umber Coordinate

SAMPLE ORDER CODE

JNBDLO N	A	13	18	48	L	3D		

DIMENSIONS
INCHES / MM

PRICING

H	D	W	NO FASCIA (N) SINGLE-SIDED (S)	NO FASCIA (N) SHARED – OPEN ON LEFT OR RIGHT (L or R)
13 / 330	15 / 381	48 / 1219	648	n/a
13 / 330	15 / 381	54 / 1372	697	n/a
13 / 330	15 / 381	60 / 1524	742	n/a
13 / 330	15 / 381	66 / 1676	792	n/a
13 / 330	15 / 381	72 / 1829	842	n/a
13 / 330	15 / 381	78 / 1981	890	n/a
13 / 330	15 / 381	84 / 2134	940	n/a
13 / 330	18 / 457	48 / 1219	n/a	699
13 / 330	18 / 457	54 / 1372	n/a	740
13 / 330	18 / 457	60 / 1524	n/a	783
13 / 330	18 / 457	66 / 1676	n/a	826
13 / 330	18 / 457	72 / 1829	n/a	868
13 / 330	18 / 457	78 / 1981	n/a	912
13 / 330	18 / 457	84 / 2134	n/a	955

Pricing is continued on the following page.

JNBDLO
Lateral Hang-On Cabinet – Open (Continued)

DIMENSIONS INCHES / MM

PRICING

FABRIC TACKBOARD (F)

SINGLE-SIDED (S)

H	D	W	Gr. A/ COM	Gr. 1	Gr. 2	Gr. 3	Gr. 4	Gr. 5	Gr. 6	Gr. 7
13 / 330	15 / 381	48 / 1219	786	792	809	819	831	846	855	864
13 / 330	15 / 381	54 / 1372	850	857	876	886	901	914	927	938
13 / 330	15 / 381	60 / 1524	914	925	943	955	971	986	1000	1012
13 / 330	15 / 381	66 / 1676	980	989	1012	1025	1042	1059	1071	1086
13 / 330	15 / 381	72 / 1829	1043	1057	1079	1093	1114	1131	1145	1160
13 / 330	15 / 381	78 / 1981	1110	1121	1146	1161	1182	1203	1218	1234
13 / 330	15 / 381	84 / 2134	1176	1188	1215	1232	1253	1274	1291	1308
13 / 330	18 / 457	48 / 1219	n/a	n/a	n/a	n/a	n/a	n/a	n/a	n/a
13 / 330	18 / 457	54 / 1372	n/a	n/a	n/a	n/a	n/a	n/a	n/a	n/a
13 / 330	18 / 457	60 / 1524	n/a	n/a	n/a	n/a	n/a	n/a	n/a	n/a
13 / 330	18 / 457	66 / 1676	n/a	n/a	n/a	n/a	n/a	n/a	n/a	n/a
13 / 330	18 / 457	72 / 1829	n/a	n/a	n/a	n/a	n/a	n/a	n/a	n/a
13 / 330	18 / 457	78 / 1981	n/a	n/a	n/a	n/a	n/a	n/a	n/a	n/a
13 / 330	18 / 457	84 / 2134	n/a	n/a	n/a	n/a	n/a	n/a	n/a	n/a

SHARED – OPEN ON LEFT OR RIGHT (L or R)

Gr. A/ COM	Gr. 1	Gr. 2	Gr. 3	Gr. 4	Gr. 5	Gr. 6	Gr. 7
n/a	n/a	n/a	n/a	n/a	n/a	n/a	n/a
n/a	n/a	n/a	n/a	n/a	n/a	n/a	n/a
n/a	n/a	n/a	n/a	n/a	n/a	n/a	n/a
n/a	n/a	n/a	n/a	n/a	n/a	n/a	n/a
n/a	n/a	n/a	n/a	n/a	n/a	n/a	n/a
n/a	n/a	n/a	n/a	n/a	n/a	n/a	n/a
n/a	n/a	n/a	n/a	n/a	n/a	n/a	n/a
863	870	886	897	911	922	933	942
915	926	942	954	969	983	994	1006
970	978	999	1010	1027	1041	1056	1065
1024	1032	1056	1066	1086	1102	1115	1130
1089	1101	1122	1138	1158	1176	1189	1205
1145	1157	1181	1196	1217	1237	1254	1268
1201	1212	1238	1256	1277	1298	1315	1333

FELT TACKBOARD (E)

H	D	W		
13 / 330	15 / 381	48 / 1219	828	n/a
13 / 330	15 / 381	54 / 1372	900	n/a
13 / 330	15 / 381	60 / 1524	972	n/a
13 / 330	15 / 381	66 / 1676	1042	n/a
13 / 330	15 / 381	72 / 1829	1115	n/a
13 / 330	15 / 381	78 / 1981	1187	n/a
13 / 330	15 / 381	84 / 2134	1256	n/a
13 / 330	18 / 457	48 / 1219	n/a	879
13 / 330	18 / 457	54 / 1372	n/a	944
13 / 330	18 / 457	60 / 1524	n/a	1010
13 / 330	18 / 457	66 / 1676	n/a	1076
13 / 330	18 / 457	72 / 1829	n/a	1143
13 / 330	18 / 457	78 / 1981	n/a	1208
13 / 330	18 / 457	84 / 2134	n/a	1270

MAGNETIC GLASS (M)

H	D	W	Back-Painted	Back-Painted
13 / 330	15 / 381	48 / 1219	1254	n/a
13 / 330	15 / 381	54 / 1372	1393	n/a
13 / 330	15 / 381	60 / 1524	1495	n/a
13 / 330	15 / 381	66 / 1676	1598	n/a
13 / 330	15 / 381	72 / 1829	1701	n/a
13 / 330	15 / 381	78 / 1981	1806	n/a
13 / 330	15 / 381	84 / 2134	1906	n/a
13 / 330	18 / 457	48 / 1219	n/a	1537
13 / 330	18 / 457	54 / 1372	n/a	1609
13 / 330	18 / 457	60 / 1524	n/a	1680
13 / 330	18 / 457	66 / 1676	n/a	1772
13 / 330	18 / 457	72 / 1829	n/a	1865
13 / 330	18 / 457	78 / 1981	n/a	1963
13 / 330	18 / 457	84 / 2134	n/a	2058

mounted storage

mounted storage product map

J N M E S Elevated Desk Shelf

Page 1235

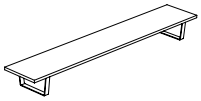

J N M E L G Elevated Cabinet – Overlay Sliding Doors – Glass

Page 1236

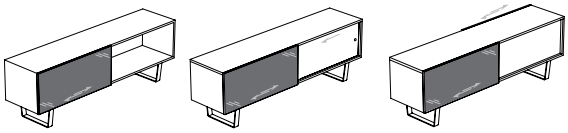

J N M E L S Elevated Cabinet – Overlay Sliding Doors – Solid

Page 1238

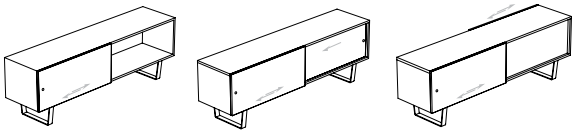

J N M S O Elevated Slim Cabinet – Open

Page 1240

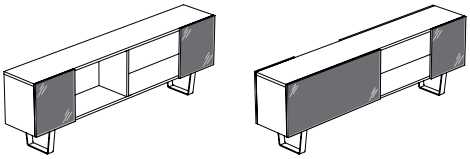

J N M L O Lateral Desktop Cabinet – Open

Page 1242

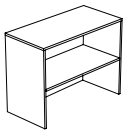

J N M D S Desktop Cabinet – Sliding Doors

Page 1244

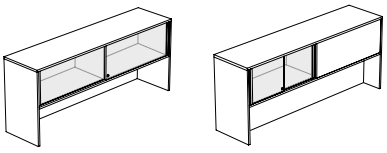

J N M D O Desktop Cabinet – Open

Page 1248

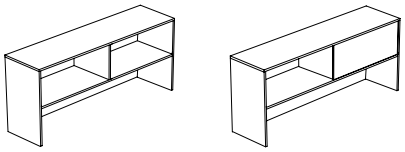

JNMES
Elevated Desk Shelf

Mounted on a worksurface in single or shared position to provide shelf space. Under shelf, the fixations provide the installation of a variety of accessories.

WHAT'S INCLUDED
1 elevated desk shelf, 2 angled legs (as specified) and mounting hardware.

WHAT'S EXCLUDED
Shelf Accessories, Linear LED Light Support and Linear LED Light.

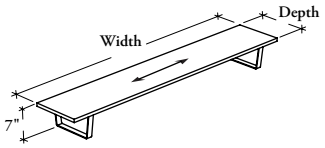

PRODUCT OPTIONS

Support Style	Height	Depth	Width	Shelf Finish	Support Finish
A Angled (Shown)	07	11, 16	30, 36, 42, 48, 54, 60, 66, 72, 78, 84	Source Laminate	Foundation Mica Accent

SAMPLE ORDER CODE

JNMES A	07	11	42	XG	53

DIMENSIONS INCHES / MM

H	D	W	PRICING
7 / 178	11 / 279	30 / 762	266
7 / 178	11 / 279	36 / 914	283
7 / 178	11 / 279	42 / 1067	298
7 / 178	11 / 279	48 / 1219	316
7 / 178	11 / 279	54 / 1372	329
7 / 178	11 / 279	60 / 1524	346
7 / 178	11 / 279	66 / 1676	358
7 / 178	11 / 279	72 / 1829	375
7 / 178	11 / 279	78 / 1981	391
7 / 178	11 / 279	84 / 2134	409
7 / 178	16 / 406	30 / 762	319
7 / 178	16 / 406	36 / 914	336
7 / 178	16 / 406	42 / 1067	357
7 / 178	16 / 406	48 / 1219	379
7 / 178	16 / 406	54 / 1372	399
7 / 178	16 / 406	60 / 1524	416
7 / 178	16 / 406	66 / 1676	436
7 / 178	16 / 406	72 / 1829	451
7 / 178	16 / 406	78 / 1981	476
7 / 178	16 / 406	84 / 2134	498

J N M E L G

Elevated Cabinet – Overlay Sliding Door – Glass

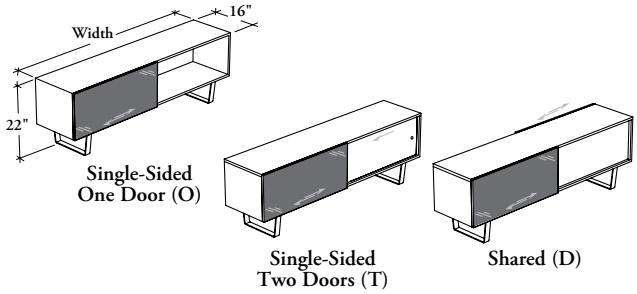

Single-Sided One Door (O)

Single-Sided Two Doors (T)

Shared (D)

This cabinet is an elevated cabinet that sits directly on worksurface in single-sided or shared application.

WHAT'S INCLUDED

Single-Sided Configuration: 1 elevated cabinet, 1 overlay sliding door (as specified), 1 laminate inset sliding door with pull (if applicable), 1 divider (inside case), 2 angled legs (as specified) and mounting hardware.

Shared Configuration: 1 elevated cabinet, 1 overlay sliding door (as specified) on each side, 1 divider (inside case), 2 angled legs (as specified) and mounting hardware.

WHAT'S EXCLUDED

Linear LED Light.

PRODUCT OPTIONS

Support Style	Height	Width	Configuration	Orientation	Overlay Door Frame Finish
A Angled (Shown)	**22** for Datum Height 51"	48, 54, 60, 66, 72, 78, 84	**D** Shared **O** Single-Sided – One Door **T** Single-Sided – Two Doors	**L** Overlay Door on Left (Shown) **R** Overlay Door on Right	Foundation Mica Accent

SAMPLE ORDER CODE

JNMELG A	22	48	T	L	83

PRODUCT OPTIONS CONTINUED

Overlay Door Finish	Case and Inset Door Finish	Support Finish	Pull Finish	Key Style
Back-Painted	Source Laminate	Foundation Mica Accent	Foundation Mica Accent **NA** Not Applicable	**N** No Lock

SAMPLE ORDER CODE CONTINUED

K1	XG	83	83	N

See Pricing on the following page.

J N M E L G

Elevated Cabinet – Overlay Sliding Door – Glass (Continued)

DIMENSIONS INCHES / MM		PRICING		
		SINGLE-SIDED – ONE DOOR (O)	SINGLE-SIDED – TWO DOORS (T)	SHARED (D)
		OVERLAY DOOR FINISH		
H	W	Back-Painted	Back-Painted	Back-Painted
22 / 559	48 / 1219	1568	1685	2079
22 / 559	54 / 1372	1630	1749	2156
22 / 559	60 / 1524	1689	1815	2231
22 / 559	66 / 1676	1748	1880	2306
22 / 559	72 / 1829	1814	1951	2395
22 / 559	78 / 1981	1880	2022	2487
22 / 559	84 / 2134	1946	2094	2575

JNMELS

Elevated Cabinet – Overlay Sliding Door – Solid

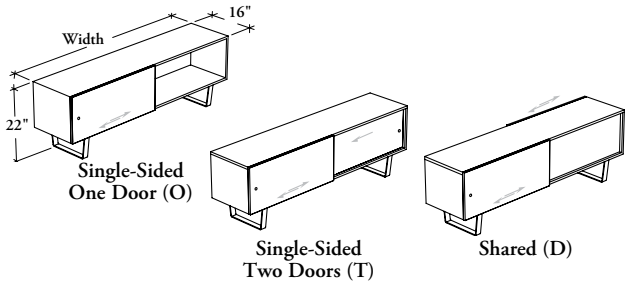

This cabinet is an elevated cabinet that sits directly on worksurface in single-sided or shared application.

WHAT'S INCLUDED

Single-Sided Configuration: 1 elevated cabinet, 1 overlay sliding door with pull (as specified), 1 laminate inset sliding door with pull (if applicable), 1 divider (inside case), 2 angled legs (as specified) and mounting hardware.

Shared Configuration: 1 elevated cabinet, 1 overlay sliding door with pool (as specified) on each side, 1 divider (inside case), 2 angled legs (as specified) and mounting hardware.

WHAT'S EXCLUDED

Linear LED Light.

NOTES

The Inset Door Finish is available with Single-Sided – Two Doors configuration (T) only.

PRODUCT OPTIONS

Support Style	Height	Width	Configuration	Orientation	Overlay Door Finish
A Angled (Shown)	**22** for Datum Height 51"	48, 54, 60, 66, 72, 78, 84	**D** Shared **O** Single-Sided – One Door **T** Single-Sided – Two Doors	**L** Overlay Door on Left (Shown) **R** Overlay Door on Right	**Laminate Front:** Source Laminate

SAMPLE ORDER CODE

JNMELS A	22	72	T	R	XG

PRODUCT OPTIONS CONTINUED

Inset Door Finish	Case Finish	Support Finish	Pull Finish	Key Style
Laminate Front: Source Laminate	Source Laminate	Foundation Mica Accent	Foundation Mica Accent	**N** No Lock

SAMPLE ORDER CODE CONTINUED

XG	XG	53	53	N

See Pricing on the following page.

JNMELS

Elevated Cabinet – Overlay Sliding Door – Solid (Continued)

DIMENSIONS INCHES / MM		PRICING		
		SINGLE-SIDED – ONE DOOR (O)	SINGLE-SIDED – TWO DOORS (T)	SHARED (D)
H	W	SOURCE LAMINATE OVERLAY DOOR FINISH		
22 / 559	48 / 1219	1202	1317	1343
22 / 559	54 / 1372	1247	1368	1394
22 / 559	60 / 1524	1298	1424	1450
22 / 559	66 / 1676	1346	1479	1503
22 / 559	72 / 1829	1393	1530	1554
22 / 559	78 / 1981	1440	1582	1604
22 / 559	84 / 2134	1488	1636	1659

J N M S O
Elevated Slim Cabinet – Open

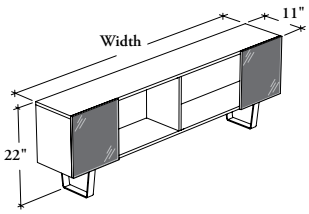

Single-Sided (S)

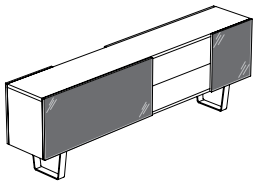

Shared –
Open on Left (L) or
Open on Right (R) (Shown)

This cabinet sits directly on worksurface to provide lateral storage areas for binders and personal items.

WHAT'S INCLUDED

Single-Sided Configuration: 1 elevated slim cabinet, 2 front fascias (as specified), 1 divider (inside case for 66" wide only), 2 angled legs (as specified), 4 rare earth magnets (with magnetic glass only) and mounting hardware.

Shared Configuration: 1 elevated slim cabinet, 2 fascias (as specified) on each sides, 1 divider (inside case), 2 angled legs (as specified), 8 (48" to 60" wide) or 12 (66" to 84" wide) rare earth magnets (with magnetic glass only) and mounting hardware.

WHAT'S EXCLUDED

Linear LED Light.

NOTES

Stitches Finish is only available when the Fascia Finish – Felt option is specified.

PRODUCT OPTIONS

Fascia Option	Support Style	Height	Depth	Width
E Felt Tackboard	**A** Angled (Shown)	**22** For Datum Height 51"	11	48, 54, 60, 66, 72, 78, 84
M Magnetic Glass (Shown)				
N No Fascia				

SAMPLE ORDER CODE

JNMSO N	A	22	11	48

PRODUCT OPTIONS CONTINUED

Orientation	Case Finish	Support Finish	Fascia Finish (If Applicable)	Stitches Finish (If Applicable)
S Single-Sided (Shown)	Source Laminate	Foundation	Felt	**C** Carbon Coordinate
L Shared – Open on Left		Mica	Back-Painted	**E** Shale Coordinate
R Shared – Open on Right (Shown)		Accent		**G** Carrara Coordinate
				M Umber Coordinate

SAMPLE ORDER CODE CONTINUED

S	XG	53		

See Pricing on the following page.

JNMSO
Elevated Slim Cabinet – Open (Continued)

DIMENSIONS INCHES / MM			PRICING	
			NO FASCIA (N)	
H	D	W	SINGLE-SIDED (S)	SHARED – OPENING ON LEFT OR RIGHT (L or R)
22 / 559	11 / 279	48 / 1219	836	836
22 / 559	11 / 279	54 / 1372	864	864
22 / 559	11 / 279	60 / 1524	892	892
22 / 559	11 / 279	66 / 1676	919	919
22 / 559	11 / 279	72 / 1829	960	960
22 / 559	11 / 279	78 / 1981	1001	1001
22 / 559	11 / 279	84 / 2134	1041	1041
			FELT TACKBOARD (E)	
			SINGLE-SIDED (S)	SHARED – OPENING ON LEFT OR RIGHT (L or R)
			FELT FASCIA FINISH	
22 / 559	11 / 279	48 / 1219	976	1114
22 / 559	11 / 279	54 / 1372	1002	1158
22 / 559	11 / 279	60 / 1524	1030	1203
22 / 559	11 / 279	66 / 1676	1059	1247
22 / 559	11 / 279	72 / 1829	1100	1306
22 / 559	11 / 279	78 / 1981	1139	1363
22 / 559	11 / 279	84 / 2134	1180	1421
			MAGNETIC GLASS (M)	
			SINGLE-SIDED (S)	SHARED – OPENING ON LEFT OR RIGHT (L or R)
			BACK-PAINTED GLASS FASCIA FINISH	
22 / 559	11 / 279	48 / 1219	1550	2439
22 / 559	11 / 279	54 / 1372	1576	2528
22 / 559	11 / 279	60 / 1524	1604	2617
22 / 559	11 / 279	66 / 1676	1633	2702
22 / 559	11 / 279	72 / 1829	1673	2803
22 / 559	11 / 279	78 / 1981	1714	2903
22 / 559	11 / 279	84 / 2134	1755	3001

J N M L O
Lateral Desktop Cabinet – Open

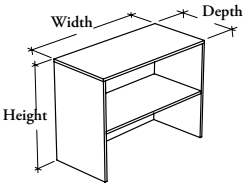

This cabinet provides bookcase storage area at the end of a single or shared worksurface.

WHAT'S INCLUDED
1 lateral desktop cabinet, mounting hardware and elements listed below:

	Height		
	13"	22"	28"
Divider (for 48"– 60" wide cabinet only)	1	1	1
Adjustable Shelf	n/a	1	n/a
Fixed Shelf	n/a	n/a	1

PRODUCT OPTIONS

Height	Depth	Width	Case Finish
13 For Datum Height 42"	15, 18	24, 30, 48, 60	Source Laminate
22 For Datum Height 51"			
28 For Datum Height 57"			

SAMPLE ORDER CODE

JNMLO 13	15	24	XG

DIMENSIONS
INCHES / MM

PRICING

H	D	W	
13 / 330	15 / 381	24 / 610	579
13 / 330	15 / 381	30 / 762	614
13 / 330	15 / 381	48 / 1219	725
13 / 330	15 / 381	60 / 1524	797
13 / 330	18 / 457	24 / 610	601
13 / 330	18 / 457	30 / 762	641
13 / 330	18 / 457	48 / 1219	762
13 / 330	18 / 457	60 / 1524	842
22 / 559	15 / 381	24 / 610	622
22 / 559	15 / 381	30 / 762	661
22 / 559	15 / 381	48 / 1219	788
22 / 559	15 / 381	60 / 1524	868
22 / 559	18 / 457	24 / 610	651
22 / 559	18 / 457	30 / 762	697
22 / 559	18 / 457	48 / 1219	828
22 / 559	18 / 457	60 / 1524	916

Pricing is continued on the following page.

J N M L O

Elevated Slim Cabinet – Open (Continued)

DIMENSIONS INCHES / MM			PRICING
H	D	W	
28 / 711	15 / 381	24 / 610	651
28 / 711	15 / 381	30 / 762	697
28 / 711	15 / 381	48 / 1219	828
28 / 711	15 / 381	60 / 1524	916
28 / 711	18 / 457	24 / 610	682
28 / 711	18 / 457	30 / 762	731
28 / 711	18 / 457	48 / 1219	873
28 / 711	18 / 457	60 / 1524	969

J N M D S
Desktop Cabinet – Sliding Doors

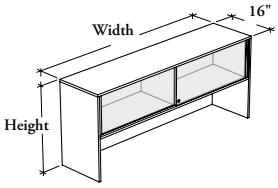

Single-Sided (S)

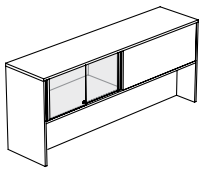

Shared –
Doors on Left (Shown) or
Doors on Right

This cabinet is an elevated closed cabinet that sits directly on worksurface in single-sided or shared application.

WHAT'S INCLUDED

Single-Sided Configuration: 1 elevated desktop cabinet, 2 sliding doors with pulls, 1 divider (inside case), lock and keys (if specified) and mounting hardware.

Shared Configuration: 1 elevated desktop cabinet, 1 back fascia (as specified) behind each compartments, 4 sliding doors with pulls, 1 divider (inside case), 1 divider (under shelf), locks and keys (if specified) and mounting hardware.

WHAT'S EXCLUDED

Linear LED Light.

NOTES

Stitches Finish is only available when the Fascia Finish – Felt option is specified.

Only the solid fascia can be specified on a back of a single-sided cabinet.

Frost (FT) is a single-sided etched tempered glass which is facing inward of cabinet.

PRODUCT OPTIONS

Fascia Option	Height	Width	Orientation	Door Style	Door Finish
E Felt Tackboard **F** Fabric Tackboard **M** Magnetic Glass **S** Solid (Shown)	**22** For Datum Height 51" **28** For Datum Height 57"	30, 36, 42, 48, 54, 60, 66, 72, 78, 84	**S** Single-Sided (Shown) **L** Shared – Doors on Left (Shown) **R** Shared – Doors on Right	**G** Glass (Shown) **L** Laminate	**Standard Glass:** **FT** Frost (Shown) **Back-Painted** **Laminate Front:** Source Laminate

SAMPLE ORDER CODE

JNMDS S	22	30	S	L	XG

PRODUCT OPTIONS CONTINUED

Case and Divider Finish	Pull Finish	Fascia Finish	Stitches Finish (If Applicable)	Key Style
Source Laminate	Foundation Mica Accent	Felt Fabric Back-Painted **Laminate Front:** Source Laminate	**C** Carbon Coordinate **E** Shale Coordinate **G** Carrara Coordinate **M** Umber Coordinate	**K** Keyed Alike **R** Keyed Randomly **N** No Lock

SAMPLE ORDER CODE CONTINUED

XG	53	XG		N

See Pricing on the following page.

JNMDS
Desktop Cabinet – Sliding Doors (Continued)

DIMENSIONS INCHES / MM		PRICING		
		SOLID (S)		
		SINGLE-SIDED (S)		
		SOURCE LAMINATE DOOR	FROST GLASS DOOR (FT)	BACK-PAINTED GLASS DOOR
H	W	SOURCE LAMINATE FASCIA FINISH		
22 / 559	30 / 762	1044	1190	1256
22 / 559	36 / 914	1137	1249	1328
22 / 559	42 / 1067	1232	1320	1412
22 / 559	48 / 1219	1344	1406	1511
22 / 559	54 / 1372	1453	1493	1611
22 / 559	60 / 1524	1544	1560	1690
22 / 559	66 / 1676	1638	1640	1784
22 / 559	72 / 1829	1730	1738	1895
22 / 559	78 / 1981	1821	1835	2006
22 / 559	84 / 2134	1912	1927	2111
28 / 711	30 / 762	1078	1221	1286
28 / 711	36 / 914	1172	1284	1363
28 / 711	42 / 1067	1268	1357	1449
28 / 711	48 / 1219	1385	1445	1551
28 / 711	54 / 1372	1495	1537	1655
28 / 711	60 / 1524	1592	1608	1738
28 / 711	66 / 1676	1688	1690	1835
28 / 711	72 / 1829	1783	1791	1949
28 / 711	78 / 1981	1878	1891	2062
28 / 711	84 / 2134	1969	1986	2170
		SHARED – DOORS ON LEFT OR RIGHT (L or R)		
22 / 559	48 / 1219	1795	2131	2238
22 / 559	54 / 1372	1934	2243	2362
22 / 559	60 / 1524	2051	2333	2464
22 / 559	66 / 1676	2169	2423	2568
22 / 559	72 / 1829	2288	2517	2676
22 / 559	78 / 1981	2406	2610	2781
22 / 559	84 / 2134	2516	2699	2883
28 / 711	48 / 1219	1835	2172	2276
28 / 711	54 / 1372	1977	2286	2404
28 / 711	60 / 1524	2098	2379	2510
28 / 711	66 / 1676	2219	2474	2618
28 / 711	72 / 1829	2340	2572	2729
28 / 711	78 / 1981	2463	2667	2836
28 / 711	84 / 2134	2575	2757	2943

Pricing is continued on the following page.

J N M D S

Desktop Cabinet – Sliding Doors (Continued)

DIMENSIONS
INCHES / MM

PRICING

FABRIC TACKBOARD (F)
SHARED – DOORS ON LEFT OR RIGHT (L or R)
SOURCE LAMINATE DOOR
FABRIC FASCIA FINISH

H	W	Gr. A/COM	Gr. 1	Gr. 2	Gr. 3	Gr. 4	Gr. 5	Gr. 6	Gr. 7
22 / 559	48 / 1219	1962	1970	1990	2000	2017	2029	2042	2052
22 / 559	54 / 1372	2111	2119	2141	2152	2169	2186	2197	2208
22 / 559	60 / 1524	2241	2250	2273	2290	2305	2323	2335	2351
22 / 559	66 / 1676	2369	2379	2404	2421	2439	2458	2475	2488
22 / 559	72 / 1829	2509	2522	2548	2565	2587	2604	2624	2637
22 / 559	78 / 1981	2641	2654	2682	2699	2723	2747	2762	2779
22 / 559	84 / 2134	2764	2781	2810	2828	2852	2875	2892	2912
28 / 711	48 / 1219	2001	2009	2029	2039	2056	2068	2081	2091
28 / 711	54 / 1372	2155	2163	2185	2196	2213	2230	2241	2252
28 / 711	60 / 1524	2288	2297	2320	2337	2352	2370	2382	2398
28 / 711	66 / 1676	2420	2430	2455	2472	2490	2509	2526	2539
28 / 711	72 / 1829	2564	2577	2603	2620	2642	2659	2679	2692
28 / 711	78 / 1981	2698	2711	2739	2756	2780	2804	2819	2836
28 / 711	84 / 2134	2823	2840	2869	2887	2911	2934	2951	2971
		FROST GLASS DOOR (FT)							
22 / 559	48 / 1219	2299	2307	2327	2337	2354	2366	2379	2389
22 / 559	54 / 1372	2421	2429	2451	2462	2479	2496	2507	2518
22 / 559	60 / 1524	2521	2530	2553	2570	2585	2603	2615	2631
22 / 559	66 / 1676	2624	2634	2659	2676	2694	2713	2730	2743
22 / 559	72 / 1829	2742	2755	2781	2798	2820	2837	2857	2870
22 / 559	78 / 1981	2845	2858	2886	2903	2927	2951	2966	2983
22 / 559	84 / 2134	2946	2963	2992	3010	3034	3057	3074	3094
28 / 711	48 / 1219	2339	2347	2367	2377	2394	2406	2419	2429
28 / 711	54 / 1372	2464	2472	2494	2505	2522	2539	2550	2561
28 / 711	60 / 1524	2569	2578	2601	2618	2633	2651	2663	2679
28 / 711	66 / 1676	2673	2683	2708	2725	2743	2762	2779	2792
28 / 711	72 / 1829	2794	2807	2833	2850	2872	2889	2909	2922
28 / 711	78 / 1981	2902	2915	2943	2960	2984	3008	3023	3040
28 / 711	84 / 2134	3004	3021	3050	3068	3092	3115	3132	3152
		BACK-PAINTED GLASS DOOR							
22 / 559	48 / 1219	2404	2412	2432	2442	2459	2471	2484	2494
22 / 559	54 / 1372	2539	2547	2569	2580	2597	2614	2625	2636
22 / 559	60 / 1524	2653	2662	2685	2702	2717	2735	2747	2763
22 / 559	66 / 1676	2767	2777	2802	2819	2837	2856	2873	2886
22 / 559	72 / 1829	2899	2912	2938	2955	2977	2994	3014	3027
22 / 559	78 / 1981	3017	3030	3058	3075	3099	3123	3138	3155
22 / 559	84 / 2134	3130	3147	3176	3194	3218	3241	3258	3278
28 / 711	48 / 1219	2445	2453	2473	2483	2500	2512	2525	2535
28 / 711	54 / 1372	2581	2589	2611	2622	2639	2656	2667	2678
28 / 711	60 / 1524	2699	2708	2731	2748	2763	2781	2793	2809
28 / 711	66 / 1676	2818	2828	2853	2870	2888	2907	2924	2937
28 / 711	72 / 1829	2952	2965	2991	3008	3030	3047	3067	3080
28 / 711	78 / 1981	3073	3086	3114	3131	3155	3179	3194	3211
28 / 711	84 / 2134	3189	3206	3235	3253	3277	3300	3317	3337

Pricing is continued on the following page.

JNMDS
Desktop Cabinet – Sliding Doors (Continued)

FELT TACKBAORD (E) (CONTINUED)

SHARED – DOORS ON LEFT OR RIGHT (L or R)

DIMENSIONS INCHES / MM		PRICING		
		SOURCE LAMINATE DOOR	FROST GLASS DOOR (FT)	BACK-PAINTED GLASS DOOR
H	W	FELT FASCIA FINISH		
22 / 559	48 / 1219	1975	2313	2419
22 / 559	54 / 1372	2138	2448	2565
22 / 559	60 / 1524	2278	2559	2691
22 / 559	66 / 1676	2420	2673	2818
22 / 559	72 / 1829	2559	2791	2950
22 / 559	78 / 1981	2702	2906	3076
22 / 559	84 / 2134	2833	3014	3199
28 / 711	48 / 1219	2015	2351	2457
28 / 711	54 / 1372	2181	2491	2608
28 / 711	60 / 1524	2327	2608	2739
28 / 711	66 / 1676	2468	2723	2868
28 / 711	72 / 1829	2613	2844	3002
28 / 711	78 / 1981	2757	2961	3132
28 / 711	84 / 2134	2892	3074	3257

MAGNETIC GLASS (M)

SHARED – DOORS ON LEFT OR RIGHT (L or R)

		SOURCE LAMINATE DOOR	FROST GLASS DOOR (FT)	BACK-PAINTED GLASS DOOR
		BACK-PAINTED GLASS FASCIA FINISH		
22 / 559	48 / 1219	2632	2971	3075
22 / 559	54 / 1372	2801	3110	3228
22 / 559	60 / 1524	2949	3229	3359
22 / 559	66 / 1676	3116	3370	3514
22 / 559	72 / 1829	3283	3515	3674
22 / 559	78 / 1981	3456	3660	3830
22 / 559	84 / 2134	3619	3802	3986
28 / 711	48 / 1219	2673	3010	3116
28 / 711	54 / 1372	2844	3153	3271
28 / 711	60 / 1524	2995	3277	3408
28 / 711	66 / 1676	3164	3420	3564
28 / 711	72 / 1829	3336	3567	3727
28 / 711	78 / 1981	3512	3715	3887
28 / 711	84 / 2134	3680	3860	4045

J N M D O
Desktop Cabinet – Open

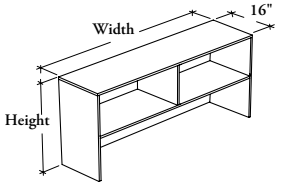

Single-Sided (S)

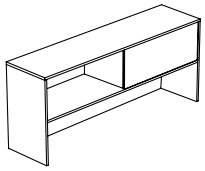

Shared –
Open on Left (Shown) or
Open on Right

This cabinet is an elevated open cabinet that sits directly on worksurface in single-sided or shared application.

WHAT'S INCLUDED

Single-Sided Configuration: 1 elevated desktop cabinet, 1 divider (inside case) and mounting hardware.

Shared Configuration: 1 elevated desktop cabinet, 1 back fascia (as specified) behind each compartments, 1 divider (inside case), 1 divider (under shelf) and mounting hardware.

WHAT'S EXCLUDED

Linear LED Light.

NOTES

Stitches Finish is only available when the Fascia Finish – Felt option is specified.

Only the solid fascia can be specified on a back of a single-sided cabinet.

PRODUCT OPTIONS

Fascia Option	Height	Width	Orientation	Case and Divider Finish	Fascia Finish	Stitches Finish (If Applicable)
E Felt Tackboard **F** Fabric Tackboard **M** Magnetic Glass **S** Solid (Shown)	**22** For Datum Height 51" **28** For Datum Height 57"	30, 36, 42, 48, 54, 60, 66, 72, 78, 84	**S** Single-Sided (Shown) **L** Shared – Open on Left (Shown) **R** Shared – Open on Right	Source Laminate	Felt Fabric Back-Painted **Laminate Front:** Source Laminate	**C** Carbon Coordinate **E** Shale Coordinate **G** Carrara Coordinate **M** Umber Coordinate

SAMPLE ORDER CODE

JNMDO S	22	30	S	3D	3D	

DIMENSIONS
INCHES / MM

PRICING

H	W	SOLID (S) SINGLE-SIDED (S) SOURCE LAMINATE FASCIA FINISH	SHARED – OPENING ON LEFT OR RIGHT (L or R)
22 / 559	30 / 762	607	n/a
22 / 559	36 / 914	655	n/a
22 / 559	42 / 1067	715	n/a
22 / 559	48 / 1219	789	789
22 / 559	54 / 1372	863	863
22 / 559	60 / 1524	916	916
22 / 559	66 / 1676	973	973
22 / 559	72 / 1829	1028	1028
22 / 559	78 / 1981	1085	1085
22 / 559	84 / 2134	1136	1136
28 / 711	30 / 762	640	n/a
28 / 711	36 / 914	690	n/a
28 / 711	42 / 1067	753	n/a
28 / 711	48 / 1219	828	828
28 / 711	54 / 1372	906	906
28 / 711	60 / 1524	965	965
28 / 711	66 / 1676	1024	1024
28 / 711	72 / 1829	1080	1080
28 / 711	78 / 1981	1141	1141
28 / 711	84 / 2134	1194	1194

Pricing is continued on the following page.

J N M D O
Desktop Cabinet – Open (Continued)

DIMENSIONS INCHES	DIMENSIONS MM	PRICING							
		FABRIC TACKBOARD (F)							
		SHARED – OPENING ON LEFT OR RIGHT (L or R)							
		FABRIC FASCIA FINISH							
		Gr. A/COM	Gr. 1	Gr. 2	Gr. 3	Gr. 4	Gr. 5	Gr. 6	Gr. 7
22	559	48	1219	952	960	978	989	1003	1018	1030	1041
22	559	54	1372	1036	1049	1066	1079	1094	1110	1122	1137
22	559	60	1524	1103	1114	1136	1150	1167	1184	1196	1211
22	559	66	1676	1167	1180	1203	1218	1238	1256	1269	1285
22	559	72	1829	1245	1260	1284	1302	1321	1341	1357	1372
22	559	78	1981	1315	1328	1356	1372	1395	1419	1435	1452
22	559	84	2134	1379	1392	1421	1440	1463	1486	1507	1523
28	711	48	1219	992	1001	1018	1030	1044	1059	1070	1082
28	711	54	1372	1080	1090	1110	1121	1138	1153	1166	1180
28	711	60	1524	1151	1160	1182	1196	1215	1232	1244	1260
28	711	66	1676	1218	1231	1254	1268	1288	1306	1320	1336
28	711	72	1829	1298	1312	1337	1354	1373	1393	1411	1427
28	711	78	1981	1371	1385	1412	1430	1452	1473	1491	1509
28	711	84	2134	1436	1450	1480	1499	1522	1545	1565	1583

		FELT TACKBOARD (E)	
		SHARED – OPENING ON LEFT OR RIGHT (L or R)	
		FELT FASCIA FINISH	
22	559	48	1219	970
22	559	54	1372	1066
22	559	60	1524	1145
22	559	66	1676	1221
22	559	72	1829	1302
22	559	78	1981	1382
22	559	84	2134	1450
28	711	48	1219	1010
28	711	54	1372	1110
28	711	60	1524	1191
28	711	66	1676	1273
28	711	72	1829	1354
28	711	78	1981	1436
28	711	84	2134	1510

		MAGNETIC GLASS (M)	
		SHARED – OPENING ON LEFT OR RIGHT (L or R)	
		BACK-PAINTED GLASS FASCIA FINISH	
22	559	48	1219	1629
22	559	54	1372	1731
22	559	60	1524	1814
22	559	66	1676	1920
22	559	72	1829	2023
22	559	78	1981	2134
22	559	84	2134	2240

J N M D O

Desktop Cabinet – Open (Continued)

DIMENSIONS INCHES / MM		PRICING
		MAGNETIC GLASS (M) (CONTINUED)
		SHARED – OPENING ON LEFT OR RIGHT (L or R)
		BACK-PAINTED GLASS FASCIA FINISH
28 / 711	48 / 1219	1668
28 / 711	54 / 1372	1774
28 / 711	60 / 1524	1862
28 / 711	66 / 1676	1969
28 / 711	72 / 1829	2078
28 / 711	78 / 1981	2190
28 / 711	84 / 2134	2298

credenzas

credenzas product map

J N F C Mobile Credenza

Page 1254

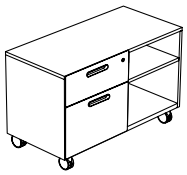

J N F C L L Freestanding Credenza – Lateral File

Page 1256

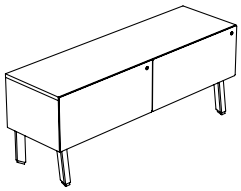

J N F C O L Freestanding Credenza – Open with Lateral File

Page 1258

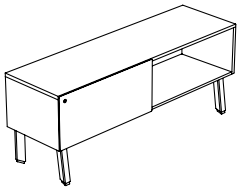

J N F C O O Freestanding Credenza – Open

Page 1260

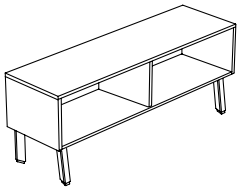

J N F C O C Freestanding Credenza – Open with Combo File

Page 1262

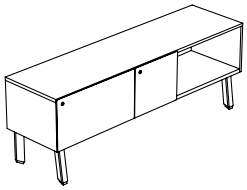

J N F C
Mobile Credenza

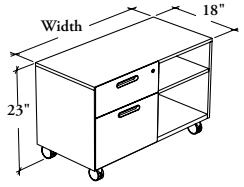

This Mobile Credenza can be specified with a combination of a small and a large drawer with open sections. It can be stored beneath any worksurface with a minimum height of 23".

WHAT'S INCLUDED
1 mobile credenza, 4 casters, 1 small box drawer, 1 file drawer, 1 adjustable shelf, 1 12" hanging file bar, counterweights, locks and keys (if specified).

WHAT'S EXCLUDED

Box Drawer Organizer, File Drawer Organizer or Seat Pad/Cushion.

NOTES
Included hanging file bar is to be installed along the depth only.

When Metal with Pulls (N) is specified, only Metal Drawer Front Finish is available.

When Solid with Pulls (T) is specified, only Laminate Drawer Front Finish is available.

PRODUCT OPTIONS

Front Style	Configuration	Height	Depth	Width	Orientation
N Metal with Pulls (Shown)	**DO** Small Box, File & Open Section	23	18	36, 42, 48	**L** Drawers on Left (Shown)
T Solid with Pulls					**R** Drawers on Right

SAMPLE ORDER CODE

JNFC T	DO	23	18	36	L

PRODUCT OPTIONS CONTINUED

Drawer Front Finish	Edge Trim Finish (Laminate Front only)	Case Finish	Pull Style	Pull Finish	Key Style
Metal Front: (for metal front style)	Edge Trim Colors	Source Laminate	**C** Cityline Recessed	Foundation	**K** Keyed Alike
Foundation				Mica	**R** Keyed Randomly
Mica				Accent	**N** No Lock
Accent					
Laminate Front: (for solid front style)					
Source Laminate					
Foundation Laminate					

SAMPLE ORDER CODE CONTINUED

3D	4D	3D	C	83	R

See Pricing on the following page.

J N F C
Mobile Credenza (Continued)

DIMENSIONS
INCHES / MM

H	D	W
23 / 584	18 / 457	36 / 914
23 / 584	18 / 457	42 / 1067
23 / 584	18 / 457	48 / 1219

PRICING

METAL WITH PULLS (N)	SOLID WITH PULLS (T)	
	Source Laminate	Foundation Laminate
1371	1371	1411
1520	1520	1571
1684	1684	1748

JNFCLL

Freestanding Credenza – Lateral File

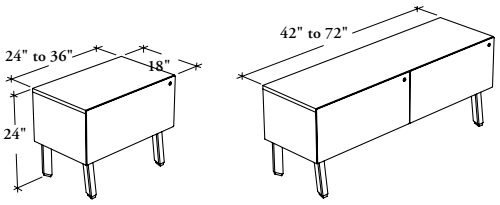

This single-sided credenza is a freestanding storage unit that provides lateral filling storage.

WHAT'S INCLUDED

1 case, 4 angled feet with levelers, 4 leveler covers, counterweights, locks and keys (if specified) and components as listed below:

	Widths			
	24"	30" or 36"	42" to 54"	60" to 72"
File Drawer	1	1	2	2
15" Hanging File Bar	1	2	2	4

WHAT'S EXCLUDED

File Drawer Organizer and Seat Pad/Cushion.

NOTES

Included hanging file bars are to be installed along the depth only.

This storage unit is equipped with an interlock system that provides opening more than one drawer at a time.

When Front Style (M or N) is specified, only Metal Drawer Front Finish is available.

When Front Style (S or T) is specified, only Laminate Drawer Front Finish is available.

When Front Style (M or S) is specified, Pull Style and Pull Finish are **not** available.

PRODUCT OPTIONS

Front Style	Foot Style	Height	Depth	Width	Configuration	Drawer Front Finish
M Metal (Shown)	**A** Angled (Shown)	24	18	24, 30, 36, 42, 48, 54, 60, 66, 72	**S** Single-Sided	**Metal Front:** (for metal front style)
N Metal with Pull+						Foundation
S Solid						Mica
T Solid with Pull						Accent
						Laminate Front: (for solid front style)
						Source Laminate
						Foundation Laminate

SAMPLE ORDER CODE

JNFCLL S	A	24	18	24	S	3D

PRODUCT OPTIONS CONTINUED

Edge Trim Finish (Laminate Front only)	Case Finish	Foot Finish	Pull Style (for Front Style (N or T) only)	Pull Finish (for Front Style (N or T) only)	Key Style
Edge Trim Colors	Source Laminate	Foundation	**C** Cityline Recessed	Foundation	**K** Keyed Alike
		Mica		Mica	**R** Keyed Randomly
		Accent		Accent	**N** No Lock

SAMPLE ORDER CODE CONTINUED

4D	3D	53			R

See Pricing on the following page.

JNFCLL
Freestanding Credenza – Lateral File (Continued)

DIMENSIONS
INCHES / MM

PRICING

H	D	W	METAL FRONT (M) or METAL FRONT WITH PULL (N)	SOLID FRONT (S) or SOLID FRONT WITH PULL (T)	
				Source Laminate	Foundation Laminate
24 / 610	18 / 457	24 / 610	1721	1721	1763
24 / 610	18 / 457	30 / 762	1876	1876	1926
24 / 610	18 / 457	36 / 914	1937	1937	2009
24 / 610	18 / 457	42 / 1067	2028	2028	2091
24 / 610	18 / 457	48 / 1219	2094	2094	2173
24 / 610	18 / 457	54 / 1372	2203	2203	2293
24 / 610	18 / 457	60 / 1524	2314	2314	2416
24 / 610	18 / 457	66 / 1676	2494	2494	2603
24 / 610	18 / 457	72 / 1829	2673	2673	2794

JNFCOL

Freestanding Credenza – Open with Lateral File

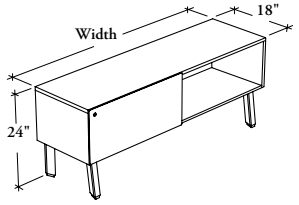

This single-sided credenza is a freestanding storage unit that provides lateral filing and binder storage.

WHAT'S INCLUDED
1 case, 1 lateral file drawer, 1 open compartment, 4 angled feet with levelers, 4 leveler covers, counterweights, 2 15" hanging file bars, locks and keys (if specified).

WHAT'S EXCLUDED
File Drawer Organizer and Seat Pad/Cushion.

NOTES
Included hanging file bars are to be installed along the depth only.

When Front Style (M or N) is specified, only Metal Drawer Front Finish is available.

When Front Style (S or T) is specified, only Laminate Drawer Front Finish is available.

When Front Style (M or S) is specified, Pull Style and Pull Finish are **not** available.

PRODUCT OPTIONS

Front Style	Foot Style	Height	Depth	Width	Configuration	Orientation
M Metal (Shown)	**A** Angled (Shown)	24	18	42, 48, 54, 60, 66, 72, 78, 84	**S** Single-Sided	**L** Drawer on Left (Shown)
N Metal with Pull+						**R** Drawer on Right
S Solid						
T Solid with Pull						

SAMPLE ORDER CODE

JNFCOL S	A	24	18	72	S	L

PRODUCT OPTIONS CONTINUED

Drawer Front Finish	Edge Trim Finish (Laminate Front only)	Case Finish	Foot Finish	Pull Style (for Front Style (N or T) only)	Pull Finish (for Front Style (N or T) only)	Key Style
Metal Front: (for metal front style)	Edge Trim Colors	Source Laminate	Foundation	**C** Cityline Recessed	Foundation	**K** Keyed Alike
Foundation			Mica		Mica	**R** Keyed Randomly
Mica			Accent		Accent	**N** No Lock
Accent						
Laminate Front: (for solid front style)						
Source Laminate						
Foundation Laminate						

SAMPLE ORDER CODE CONTINUED

3D	4D	3D	60			R

See Pricing on the following page.

JNFCOL

Freestanding Credenza – Open with Lateral File (Continued)

DIMENSIONS
INCHES / MM

PRICING

H	D	W	METAL FRONT (M) or METAL FRONT WITH PULL (N)	SOLID FRONT (S) or SOLID FRONT WITH PULL (T)	
				Source Laminate	Foundation Laminate
24 / 610	18 / 457	42 / 1067	1523	1523	1554
24 / 610	18 / 457	48 / 1219	1641	1641	1683
24 / 610	18 / 457	54 / 1372	1821	1821	1863
24 / 610	18 / 457	60 / 1524	1940	1940	1980
24 / 610	18 / 457	66 / 1676	1992	1992	2051
24 / 610	18 / 457	72 / 1829	2035	2035	2094
24 / 610	18 / 457	78 / 1981	2074	2074	2134
24 / 610	18 / 457	84 / 2134	2116	2116	2175

J N F C O O
Freestanding Credenza – Open

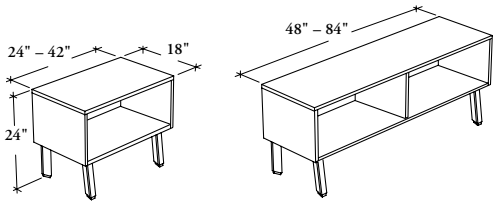

This single-sided credenza is a freestanding storage unit that provides open storage.

WHAT'S INCLUDED
1 case, 1 divider (as specified), 4 angled feet with levelers, 4 leveler covers and open compartments listed below:

	Width	
	24" to 42"	48" to 84"
Open Compartment	1	2

WHAT'S EXCLUDED
Seat Pad/Cushion.

PRODUCT OPTIONS

Foot Style	Height	Depth	Width	Configuration	Case Finish	Foot Finish
A Angled (Shown)	24	18	24, 30, 36, 42, 48, 54, 60, 66, 72, 78, 84	**S** Single-Sided	Source Laminate	Foundation Mica Accent

SAMPLE ORDER CODE

JNFCOO A	24	18	48	S	3D	83

DIMENSIONS
INCHES / MM

H	D	W
24 / 610	18 / 457	24 / 610
24 / 610	18 / 457	30 / 762
24 / 610	18 / 457	36 / 914
24 / 610	18 / 457	42 / 1067
24 / 610	18 / 457	48 / 1219
24 / 610	18 / 457	54 / 1372
24 / 610	18 / 457	60 / 1524
24 / 610	18 / 457	66 / 1676
24 / 610	18 / 457	72 / 1829
24 / 610	18 / 457	78 / 1981
24 / 610	18 / 457	84 / 2134

PRICING

996
1054
1095
1184
1219
1255
1302
1346
1392
1438
1484

J N F C O C

Freestanding Credenza – Open with Combo File

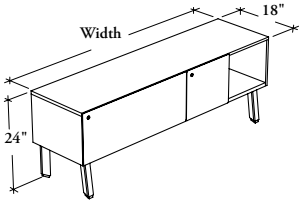

This single-sided credenza is a freestanding storage unit that provides a mix of lateral filing, personal and binder storage.

WHAT'S INCLUDED

1 case, 1 large lateral file drawer, 1 small lateral file drawer, 1 open compartment, 4 angled feet with levelers, 4 leveler covers, counterweights, locks and keys (if specified), and components as listed below:

	Widths	
	54" to 66"	72" to 84"
12" Hanging File Bar (for small drawer)	1	1
15" Hanging File Bar (for large drawer)	1	2

WHAT'S EXCLUDED

File Drawer Organizer and Seat Pad/Cushion.

NOTES

Included 15" hanging file bars are to be installed along the depth only.

Included 12" hanging file bar is to be installed along the width only.

This storage unit is equipped with an interlock system that prevents opening more than one drawer at a time.

When Front Style (M or N) is specified, only Metal Drawer Front Finish is available.

When Front Style (S or T) is specified, only Laminate Drawer Front Finish is available.

When Front Style (M or S) is specified, Pull Style and Pull Finish are **not** available.

PRODUCT OPTIONS

Front Style	Foot Style	Height	Depth	Width	Configuration	Orientation
M Metal (Shown)	**A** Angled (Shown)	24	18	54, 60, 66, 72, 78, 84	**S** Single-Sided	**L** Drawers on Left (Shown)
N Metal with Pull+						**R** Drawers on Right
S Solid						
T Solid with Pull						

SAMPLE ORDER CODE

JNFCOC S	A	24	18	72	S	L

PRODUCT OPTIONS CONTINUED

Drawer Front Finish	Edge Trim Finish (Laminate Front only)	Case Finish	Foot Finish	Pull Style (for Front Style (N or T) only)	Pull Finish (for Front Style (N or T) only)	Key Style
Metal Front: (for metal front style)	Edge Trim Colors	Source Laminate	Foundation	**C** Cityline Recessed	Foundation	**K** Keyed Alike
Foundation			Mica		Mica	**R** Keyed Randomly
Mica			Accent		Accent	**N** No Lock
Accent						
Laminate Front: (for solid front style)						
Source Laminate						
Foundation Laminate						

SAMPLE ORDER CODE CONTINUED

3D	4D	3D	60			R

See Pricing on the following page.

JNFCOC

Freestanding Credenza – Open with Combo File (Continued)

DIMENSIONS
INCHES / MM

PRICING

H	D	W	METAL FRONT (M) or METAL FRONT WITH PULL (N)	SOLID FRONT (S) or SOLID FRONT WITH PULL (T)	
				Source Laminate	Foundation Laminate
24 / 610	18 / 457	54 / 1372	1880	1880	1916
24 / 610	18 / 457	60 / 1524	2011	2011	2057
24 / 610	18 / 457	66 / 1676	2141	2141	2198
24 / 610	18 / 457	72 / 1829	2410	2410	2477
24 / 610	18 / 457	78 / 1981	2677	2677	2753
24 / 610	18 / 457	84 / 2134	2807	2807	2895

freestanding storage

freestanding storage product map

J N F P M Mobile Pedestal

Page 1268

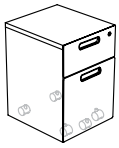

J N F M P Mobile Pedestal with Seat – Felt

Page 1269

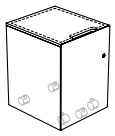

J N F P S Pedestal

Page 1270

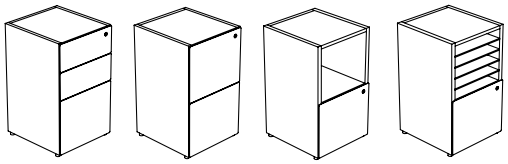

J N F C P Combo Pedestal

Page 1272

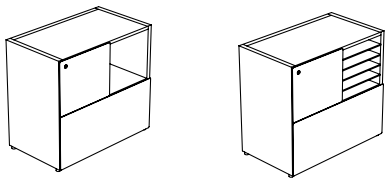

J N F L F Lateral File

Page 1274

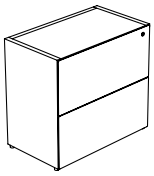

J N F B M Bookcase with Metal Dividers

Page 1276

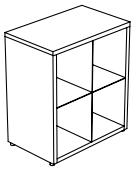

J N F B L Bookcase

Page 1277

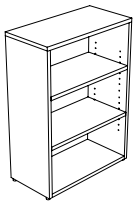

J N F B P L Beam Tower with Drawers – Lateral Access

Page 1278

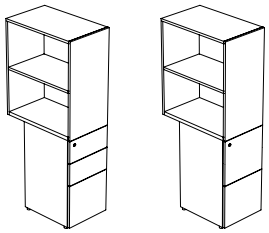

freestanding storage product map

J N F B W F Beam Tower with Drawers and Wardrobe – Front Access

Page 1280

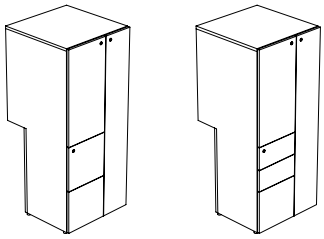

J N F B S Beam Tower with Full Solid Door

Page 1282

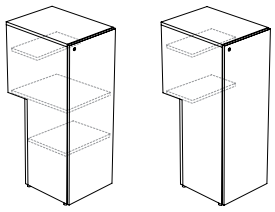

J N F B G Beam Tower with Full Glass Door

Page 1284

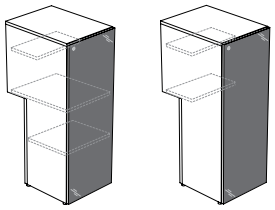

J N F B D S Dual Beam Tower with Full Solid Doors

Page 1286

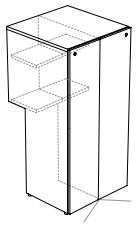

J N F T P L Freestanding Tower with Drawers – Lateral Access

Page 1288

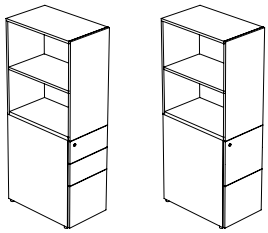

J N F T W F Freestanding Tower with Drawers and Wardrobe – Front Access

Page 1290

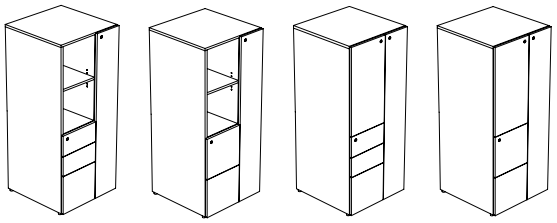

J N F T S Freestanding Tower with Full Solid Door

Page 1292

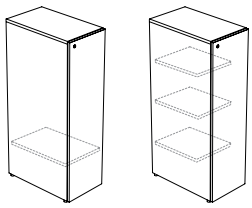

J N F T G Freestanding Tower with Full Glass Door

Page 1293

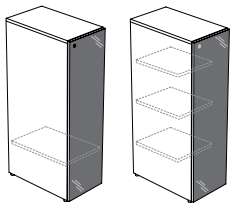

freestanding storage product map

J N F T T S Freestanding Tower with Two Full Solid Doors

Page 1294

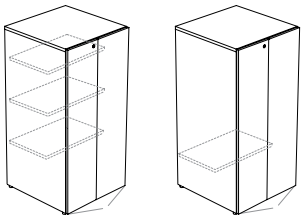

J N F K S Supporting Storage Kit

Page 1296

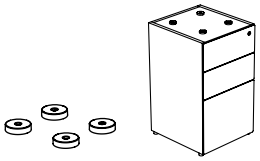

J N F K L Lateral Linking Plates

Page 1296

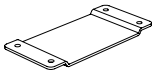

J N F K H Hang-On Kit

Page 1297

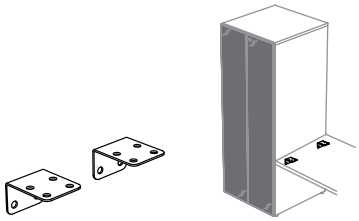

J N F A L B Hanging File Bar

Page 1298

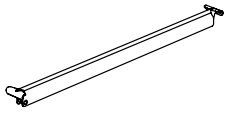

K Locks & Keys

Page 1299

S O K L Set of Keys Alike

Page 1300

J N F P M
Mobile Pedestal

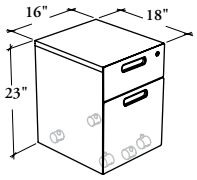

This Mobile Pedestal is a small personal storage unit. It can be stored beneath any worksurface with a minimum height of 23".

WHAT'S INCLUDED
1 pedestal with casters, 1 box drawer, 1 file drawer, 1 pencil tray, 1 drawer divider, 1 12" hanging file bar, locks and keys (if specified).

WHAT'S EXCLUDED
Box Drawer Organizer, File Drawer Organizer and Seat Pad/Cushion.

NOTES
Included hanging file bar is to be installed along the width only.

When Metal with Pulls (N) is specified, only Metal Front Finish is available.

When Solid with Pulls (T) is specified, only Laminate Front Finish is available.

PRODUCT OPTIONS

Front Style	Confi-guration	Depth	Width	Height	Drawer Front Finish	Edge Trim Finish (Laminate Front Only)	Case Finish	Pull Style	Pull Finish	Key Style
N Metal with Pulls (Shown) **T** Solid with Pulls	**BF** Box, File	18	16	23	**Metal Front:** (for metal front style) Foundation Mica Accent **Laminate Front:** (for solid front style) Source Laminate Foundation Laminate	Edge Trim Colors	Source Laminate	**C** Cityline Recessed	Foundation Accent Mica	**K** Keyed Alike **R** Keyed Randomly **N** No Lock

SAMPLE ORDER CODE

JNFPM										
T	BF	18	16	23	3D	4D	3D	C	83	K

DIMENSIONS
INCHES / MM

D	W	H
18 / 457	16 / 406	23 / 584

PRICING

METAL WITH PULLS (N)	SOLID WITH PULLS (T)	
	Source Laminate	Foundation Laminate
853	853	893

J N F M P
Mobile Pedestal with Seat – Felt

The Mobile Pedestal with Seat – Felt is a small personal storage unit providing temporary casual seating within a workstation. It can be stored beneath any worksurface with a minimum height of 21".

WHAT'S INCLUDED
1 pedestal, casters, 1 felt seat, 1 file drawer, 1 fixed shelf, 1 12" hanging file bar, locks and keys (if specified).

WHAT'S EXCLUDED
Drawer Module and File Drawer Organizer.

NOTES
Comes with a flush pull onto the felt seat to allow opening of the file drawer.

Included hanging file bar is to be installed along the width only.

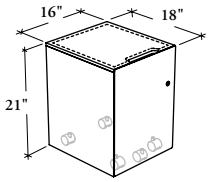

PRODUCT OPTIONS

Front Style	Depth	Width	Height	Seat Finish	Stitches Finish	Drawer Front Finish	Edge Trim Finish (Laminate Front Only)	Case Finish	Key Style
M Metal (Shown)	18	16	21	Loft	**C** Carbon Coordinate	**Metal Front:** (for metal front style)	Edge Trim Colors	Source Laminate	**K** Keyed Alike
S Solid					**E** Shale Coordinate	Foundation			**R** Keyed Randomly
					G Carrara Coordinate	Mica			**N** No Lock
					M Umber Coordinate	Accent			
						Laminate Front: (for solid front style)			
						Source Laminate			
						Foundation Laminate			

SAMPLE ORDER CODE

JNFMP S	18	16	21	RB11	C	3D	4D	3D	K

DIMENSIONS
INCHES / MM

D	W	H
18 / 457	16 / 406	21 / 533

PRICING

METAL FRONT (M)	SOLID FRONT (S)	
	Source Laminate	Foundation Laminate
1020	1020	1059

J N F P S
Pedestal

This pedestal has a variety of configurations that provides storage below the worksurface. It can be used freestanding or attached to the worksurface.

WHAT'S INCLUDED

1 pedestal, levelers, supporting kit (as specified), locks and keys (if specified), and accessories listed below:

	Configuration			
	B	F	O	S
Touch Latch Drawer	3	2	1	1
Pencil Tray	1	n/a	n/a	n/a
Drawer Divider	1	n/a	n/a	n/a
12" Hanging File Bar	1	2	1	1
Removeable Metal Shelf	n/a	n/a	n/a	4

WHAT'S EXCLUDED

Box Drawer Organizer, File Drawer Organizer and Drawer Module.

NOTES

When 18" deep pedestal is specified, the Freestanding Application (F) is **not** available.

For Open/File Configuration (O) only, a Drawer Module (JNAMD) can be installed and centered in the upper open compartment.

This storage unit has a central locking system for Box, Box , File (B) and File, File (F) configurations only.

Included hanging file bar is to be installed along the width only.

When Front Style (M or N) is specified, only Metal Drawer Front Finish is available.

When Front Style (S or T) is specified, only Laminate Drawer Front Finish is available.

When Front Style (M or S) is specified, Pull Style and Pull Finish are **not** available.

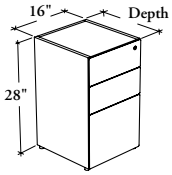

Box, Box, File (B)

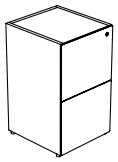

File, File (F)

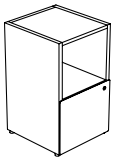

Open, File (O)

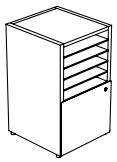

Shelves, File (S)

PRODUCT OPTIONS

Front Style	Configuration	Depth	Width	Height	Application	Drawer Front Finish
M Metal (Shown)	**B** Box, Box, File	18, 24, 30	16	28	**A** Attached to Worksurface	**Metal Front:** (for metal front style)
N Metal with Pull	**F** File, File				**F** Freestanding	Foundation
S Solid	**O** Open, File					Mica
T Solid with Pull	**S** Shelves, File					Accent
						Laminate Front: (for solid front style)
						Source Laminate
						Foundation Laminate

SAMPLE ORDER CODE

JNFPS S	S	24	16	28	F	3D

PRODUCT OPTIONS CONTINUED

Edge Trim Finish (Laminate Front Only)	Case Finish	Shelf Finish (Configuration (S) only)	Pull Style (for Front Style (N or T) only)	Pull Finish (for Front Style (N or T) only)	Key Style
Edge Trim Colors	Source Laminate	Foundation	**C** Cityline Recessed	Foundation	**K** Keyed Alike
		Mica		Mica	**R** Keyed Randomly
		Accent		Accent	**N** No Lock

SAMPLE ORDER CODE

4D	3D	52			K

See Pricing on the following page.

J N F P S
Pedestal (Continued)

DIMENSIONS INCHES / MM			PRICING		
			METAL FRONT (M) or METAL FONT WITH PULL (N)	SOLID FRONT (S) or SOLID FRONT WITH PULL (T)	
			OPEN, FILE (O)		
D	W	H		Source Laminate	Foundation Laminate
18 / 457	16 / 406	28 / 711	955	791	819
24 / 610	16 / 406	28 / 711	1034	863	890
30 / 762	16 / 406	28 / 711	1138	935	960
			FILE, FILE (F)		
18 / 457	16 / 406	28 / 711	889	889	943
24 / 610	16 / 406	28 / 711	954	954	1009
30 / 762	16 / 406	28 / 711	1059	1059	1114
			SHELVES, FILE (S)		
18 / 457	16 / 406	28 / 711	791	954	981
24 / 610	16 / 406	28 / 711	863	1025	1053
30 / 762	16 / 406	28 / 711	935	1095	1122
			BOX, BOX, FILE (B)		
18 / 457	16 / 406	28 / 711	954	955	1010
24 / 610	16 / 406	28 / 711	1025	1034	1089
30 / 762	16 / 406	28 / 711	1095	1138	1191

J N F C P
Combo Pedestal

This product provides storage and filing below the worksurface. It can be used freestanding or attached to the worksurface.

WHAT'S INCLUDED

1 combo pedestal (1 15" file drawer/1 30" file drawer), levelers, supporting kit (as specified), 1 12" hanging file bar, 2 15" hanging file bars, locks and keys (if specified), and accessories listed below:

	Configuration	
	O	S
Touch Latch Drawer	2	2
Open Compartment	1	n/a
Removeable Metal Shelf	n/a	4

WHAT'S EXCLUDED

Box Drawer Organizer and File Drawer Organizer.

NOTES

The Combo Pedestal is a handed product and must be specified left (Shown) or right. The handed end is determined by the location of the 15" file drawer.

When 18" deep pedestal is specified, the Freestanding Application (F) is **not** available.

The 12" hanging file bar installs along the width in the 15" file drawer.

The 15" hanging file bars install along the depth in the 30" file drawer.

This storage has a central locking system and is also equipped with an interlock system that prevents opening more than one drawer at a time.

When Front Style (M or N) is specified, only Metal Drawer Front Finish is available.

When Front Style (S or T) is specified, only Laminate Drawer Front Finish is available.

When Front Style (M or S) is specified, Pull Style and Pull Finish are **not** available.

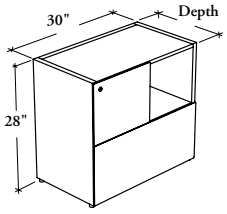

Open, Files (O)

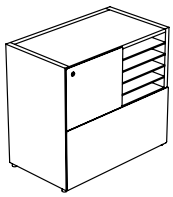
Shelves, Files (S)

PRODUCT OPTIONS

Front Style	Configuration	Depth	Width	Height	Application	Orientation
M Metal (Shown)	**O** Open, Files	18, 24	30	28	**A** Attached to Worksurface	**L** Upper Drawer on Left (Shown)
N Metal with Pull	**S** Shelves, Files				**F** Freestanding	**R** Upper Drawer on Right
S Solid						
T Solid with Pull						

SAMPLE ORDER CODE

JNFCP S	S	24	30	28	F	L

PRODUCT OPTIONS CONTINUED

Drawer Front Finish	Edge Trim Finish (Laminate Front Only)	Case Finish	Shelf Finish (Configuration (S) only)	Pull Style (for Front Style (N or T) only)	Pull Finish (for Front Style (N or T) only)	Key Style
Metal Front: (for metal front style)	Edge Trim Colors	Source Laminate	Foundation	**C** Cityline Recessed	Foundation	**K** Keyed Alike
Foundation			Mica		Mica	**R** Keyed Randomly
Mica			Accent		Accent	**N** No Lock
Accent						
Laminate Front: (for solid front style)						
Source Laminate						
Foundation Laminate						

SAMPLE ORDER CODE

3D	4D	3D	52			K

See Pricing on the following page.

JNFCP
Combo Pedestal (Continued)

DIMENSIONS INCHES / MM			PRICING		
			METAL FRONT (M) or METAL FONT WITH PULL (N)	SOLID FRONT (S) or SOLID FRONT WITH PULL (T)	
			OPEN, FILE (O)		
D	W	H		Source Laminate	Foundation Laminate
18 / 457	30 / 762	28 / 711	1416	1416	1492
24 / 610	30 / 762	28 / 711	1554	1554	1631
			SHELVES, FILES (S)		
18 / 457	30 / 762	28 / 711	1579	1579	1655
24 / 610	30 / 762	28 / 711	1716	1716	1791

J N F L F
Lateral File

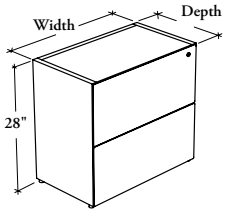

Two Drawers

This storage unit provides high density filing and organized storage. It can be used freestanding or attached to the worksurface.

WHAT'S INCLUDED
1 lateral file, 2 touch latch drawers, levelers, supporting kit (as specified), locks and keys (if specified), and hanging file bar listed below:

	Width	
	24"	30" or 36"
15" Hanging File Bar	1	2 (per drawer)

WHAT'S EXCLUDED
File Drawer Organizer.

NOTES
When 18" deep cabinet is specified, the Freestanding Application (F) is **not** available.

Included hanging file bars are to be installed along the depth only.

This storage unit has a central locking system and is also equipped with an interlock system that prevents opening more than one drawer at a time.

When Front Style (M or N) is specified, only Metal Drawer Front Finish is available.

When Front Style (S or T) is specified, only Laminate Drawer Front Finish is available.

When Front Style (M or S) is specified, Pull Style and Pull Finish are **not** available.

PRODUCT OPTIONS

Front Style	Depth	Width	Height	Application	Drawer Front Finish
M Metal (Shown)	18, 24	24, 30, 36	**28** Two Drawers (28")	**A** Attached to Worksurface	**Metal Front:** (for metal front style)
N Metal with Pull				**F** Freestanding	Foundation
S Solid					Mica
T Solid with Pull					Accent
					Laminate Front: (for solid front style)
					Source Laminate
					Foundation Laminate

SAMPLE ORDER CODE

JNFLF S	24	36	28	F	3D

PRODUCT OPTIONS CONTINUED

Edge Trim Finish (Laminate Front Only)	Case Finish	Pull Style (for Front Style (N or T) only)	Pull Finish (for Front Style (N or T) only)	Key Style
Edge Trim Colors	Source Laminate	**C** Cityline Recessed	Foundation	**K** Keyed Alike
			Mica	**R** Keyed Randomly
			Accent	**N** No Lock

SAMPLE ORDER CODE

4D	3D			K

See Pricing on the following page.

J N F L F
Lateral File (Continued)

DIMENSIONS
INCHES / MM

PRICING

D	W	H	METAL FRONT (M) or METAL FONT WITH PULL (N)	SOLID FRONT (S) or SOLID FRONT WITH PULL (T)	
				Source Laminate	Foundation Laminate
18 / 457	24 / 610	28 / 711	1151	1151	1232
18 / 457	30 / 762	28 / 711	1228	1228	1328
18 / 457	36 / 914	28 / 711	1306	1306	1427
24 / 610	24 / 610	28 / 711	1245	1245	1326
24 / 610	30 / 762	28 / 711	1329	1329	1431
24 / 610	36 / 914	28 / 711	1423	1423	1544

J N F B M
Bookcase with Metal Dividers

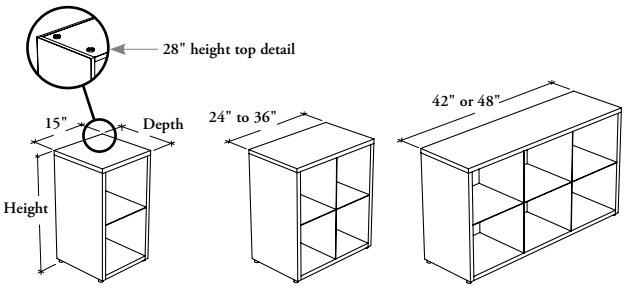

Two Compartments | Four Compartments | Six Compartments

This storage unit provides high density open storage within the workstation.

WHAT'S INCLUDED
1 bookcase, levelers, supporting kit (included with 28" height only) and components listed below:

	Width		
	15"	24" to 36"	42" or 48"
Metal Divider	n/a	1	2
Metal Shelf	1	2	3

NOTES
The 29" high Bookcase can be used freestanding but the 28" high Bookcase must be used under worksurfaces.

PRODUCT OPTIONS

Depth	Width	Height	Case Finish	Shelf and Divider Finish
15, 18	15, 24, 30, 36, 42, 48	28, 29	Source Laminate	Foundation Mica Accent

SAMPLE ORDER CODE

JNFBM 15	24	28	3D	53

DIMENSIONS INCHES / MM

PRICING

D	W	28" or 29" HEIGHT
15 / 381	15 / 381	699
15 / 381	24 / 610	854
15 / 381	30 / 762	919
15 / 381	36 / 914	988
15 / 381	42 / 1067	1117
15 / 381	48 / 1219	1186
18 / 457	15 / 381	733
18 / 457	24 / 610	916
18 / 457	30 / 762	994
18 / 457	36 / 914	1071
18 / 457	42 / 1067	1217
18 / 457	48 / 1219	1295

JNFBL
Bookcase

The Bookcase provides open storage within the workstation.

WHAT'S INCLUDED
1 bookcase, levelers, supporting kit (includes with 28" height only) and adjustable shelf as listed below:

	Adjustable Shelves
28" or 29" high	1
42" high	2
51" or 57" high	3

WHAT'S EXCLUDED
Hang-On Kit.

NOTES
28" high Bookcase must be used under worksurfaces.

Top on 29" to 57" heights overlaps side and back panels for a cleaner look.

Holes at 1 1/4" intervals on the inside walls of side panels allow for shelf adjustment.

The shelves and case construction are 1" thick.

Two rows of standard letter-size binders will not fit in the 28" high Bookcase.

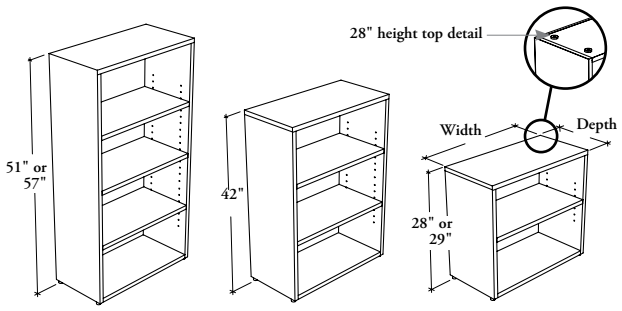

PRODUCT OPTIONS

Depth	Width	Height	Finish
15, 18	18, 24, 30, 36	28, 29, 42, 51, 57	Source Laminate

SAMPLE ORDER CODE

JNFBL 15	18	28	3D

DIMENSIONS
INCHES / MM

PRICING

D	W	28" or 29" HEIGHT	42" HEIGHT	51" or 57" HEIGHT
15 / 381	18 / 457	556	829	868
15 / 381	24 / 610	602	865	907
15 / 381	30 / 762	650	902	943
15 / 381	36 / 914	699	938	984
18 / 457	18 / 457	579	870	911
18 / 457	24 / 610	623	907	947
18 / 457	30 / 762	670	942	983
18 / 457	36 / 914	718	980	1021

J N F B P L

Beam Tower with Drawers – Lateral Access

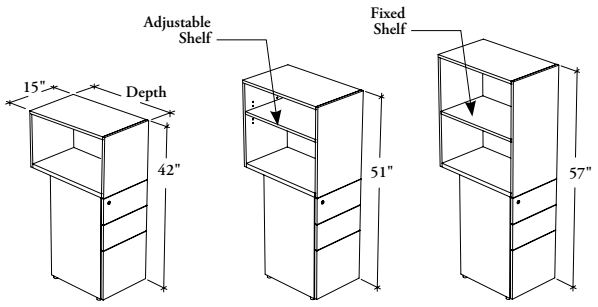

Lateral Access, Box, Box, File or File, File

These beam towers provide different storage possibilities, while supporting the front of a worksurface and let a beam pass-through.

WHAT'S INCLUDED

1 beam tower, levelers, 1 cable pass-through ring (as specified), locks and keys (if specified), beam mounting hardware, and accessories as listed below:

	Height			Position	
	42"	51"	57"	E	I
Compartment (Lateral Access)	1	2	2	Hang-On Kit 1	2
Adjust. Shelf	n/a	1	n/a		
Fixed Shelf	n/a	n/a	1		

WHAT'S EXCLUDED

Cable Pass-Through Cover (if applicable), Box Drawer Organizer and File Drawer Organizer.

NOTES

Depth of drawers is fixed. Only the high open section depth varies.

With Cable Pass-Through option is **not** applicable with In-Line position (I).

Cable Pass-Through ring comes in a Platinum Coordinate.

When End of Station (E) position is specified, only the (N or S) Cable Pass-Through option is avalaible.

When Front Style (S) is specified, Pull Style and Pull Finish are **not** available.

File drawers can only accommodate legal size suspended files.

This storage unit has a central locking system.

PRODUCT OPTIONS

Front Style	Drawer Configuration	Depth	Width	Height	Position	Orientation
S Solid	**B** Box, Box File (Shown)	24, 30	15	42, 51, 57	**E** End of Station	**L** Left
T Solid with Pull	**F** File, File				**I** In-Line	**R** Right (Shown)

SAMPLE ORDER CODE

JNFBPL S	F	24	15	42	I	L

PRODUCT OPTIONS CONTINUED

Front Finish	Edge Trim Finish (Laminate Front Only)	Case Finish	Cable Pass-Through	Pull Style (for Front Style (T) only)	Pull Finish (for Front Style (T) only)	Key Style
Source Laminate	Edge Trim Colors	Source Laminate	**N** No Pass-Through (Shown)	**C** Cityline Recessed	Foundation	**K** Keyed Alike
			S Standard-Height Pass-Through		Mica	**R** Keyed Randomly
			X Not Applicable		Accent	**N** No Lock

SAMPLE ORDER CODE

3D	4D	3D	X			K

See Pricing on the following page.

J N F B P L

Beam Tower with Drawers – Lateral Access (Continued)

DIMENSIONS
INCHES / MM

PRICING

D	W	H	FILE, FILE (F) Source Laminate	BOX, BOX, FILE (B) Source Laminate
24 / 610	15 / 381	42 / 1067	1343	1408
24 / 610	15 / 381	51 / 1295	1488	1551
24 / 610	15 / 381	57 / 1448	1586	1647
30 / 762	15 / 381	42 / 1067	1459	1522
30 / 762	15 / 381	51 / 1295	1603	1667
30 / 762	15 / 381	57 / 1448	1699	1766

J N F B W F

Beam Tower with Drawers and Wardrobe – Front Access

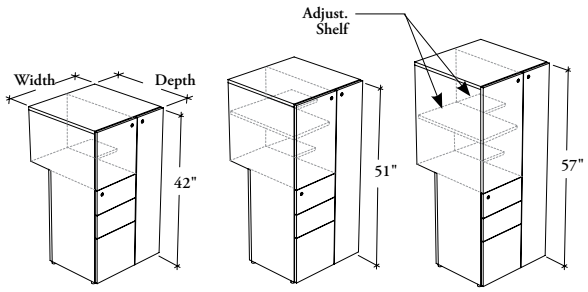

Front Access, Box, Box, File or File, File

These beam towers provide storage area to store garments and other items combined the filing capabilities of a pedestal, while supporting the front of a worksurface and let a beam pass-through.

WHAT'S INCLUDED

1 beam tower with half wardrobe, levelers, 1 cable pass-through ring (as specified), 1 coat hook, locks and keys (if specified), beam mounting hardware, and accessories as listed below:

	Height			Position			Drawer Config.		
	42"	51"	57"		E	I		B	F
Adjust. Shelf (on both compartment)	n/a	1	1	Hang-On Kit	1	2	Pencil Drawer	1	n/a
							Drawer Divider	1	n/a
							12" Hang. File Bar	1	2

WHAT'S EXCLUDED

Cable Pass-Through Cover (if applicable), Box Drawer Organizer and File Drawer Organizer.

NOTES

Included hanging file bars are to be installed along the width only.

Holes at 1 1/4" intervals on the inside walls of side panels of the top section and wardrobe allow for shelf adjustment.

Depth and width of drawers is always fixed. Only the high section depth can varies.

With Cable Pass-Through option is **not** applicable with In-Line position (I).

Cable Pass-Through Ring comes in a Platinum Coordinate.

When End of Station (E) position is specified, only the (N) or (S) Cable Pass-Through option is avalaible.

When Front Style (S) is specified, Pull Style and Pull Finish are **not** available.

This storage unit has a central locking system.

PRODUCT OPTIONS

Front Style	Drawer Configuration	Depth	Width	Height	Position	Orientation
S Solid	**B** Box, Box, File (Shown)	24, 30	24, 30	42, 51, 57	**E** End of Station	**L** Full Door on Left
T Solid with Pull	**F** File, File				**I** In-Line	**R** Full Door on Right (Shown)

SAMPLE ORDER CODE

JNFBWF S	F	24	24	42	E	L

PRODUCT OPTIONS CONTINUED

Front Finish	Edge Trim Finish (Laminate Front Only)	Case Finish	Cable Pass-Through	Pull Style (for Front Style (T) only)	Pull Finish (for Front Style (T) only)	Key Style
Source Laminate	Edge Trim Colors	Source Laminate	**N** No Pass-Through (Shown)	**C** Cityline Recessed	Foundation	**K** Keyed Alike
Foundation Laminate			**S** Standard-Height Pass-Through		Mica	**R** Keyed Randomly
			X Not Applicable		Accent	**N** No Lock

SAMPLE ORDER CODE

3D	4D	3D	N			K

See Pricing on the following page.

J N F B W F

Beam Tower with Drawers and Wardrobe – Front Access (Continued)

DIMENSIONS INCHES / MM

PRICING

D	W	H	FILE, FILE (F) Source Laminate	FILE, FILE (F) Foundation Laminate	BOX, BOX, FILE (B) Source Laminate	BOX, BOX, FILE (B) Foundation Laminate
24 / 610	24 / 610	42 / 1067	1884	2004	1945	2066
24 / 610	24 / 610	51 / 1295	2028	2175	2093	2240
24 / 610	24 / 610	57 / 1448	2116	2279	2176	2341
24 / 610	30 / 762	42 / 1067	2039	2189	2100	2250
24 / 610	30 / 762	51 / 1295	2176	2363	2241	2423
24 / 610	30 / 762	57 / 1448	2270	2475	2332	2538
30 / 762	24 / 610	42 / 1067	2008	2127	2068	2189
30 / 762	24 / 610	51 / 1295	2153	2300	2216	2363
30 / 762	24 / 610	57 / 1448	2241	2404	2301	2465
30 / 762	30 / 762	42 / 1067	2162	2313	2223	2375
30 / 762	30 / 762	51 / 1295	2301	2486	2364	2546
30 / 762	30 / 762	57 / 1448	2384	2590	2448	2653

J N F B S
Beam Tower with Full Solid Door

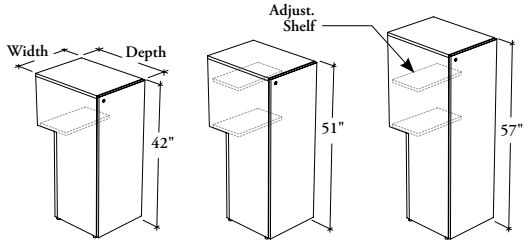

Wardrobe (W)

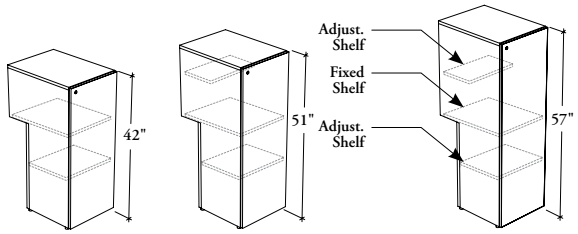

Shelves (S)

These beam towers provide storage area to store garments and other items, while supporting the front of a worksurface and let a beam pass-through.

WHAT'S INCLUDED

1 beam tower, levelers, 1 cable pass-through ring (as specified), 1 (12" w) or 2 (18" w) coat hooks (wardrobe only), locks and keys (if specified), beam mounting hardware, and accessories as listed below:

	Interior Configuration						Position		
	S			W				E	I
Heights	42"	51"	57"	42"	51"	57"			
Adjust. Shelf	1	2	2	n/a	1	1	Hang-On		
Fixed Shelf	1	1	1	n/a	n/a	n/a	Kit	1	2

WHAT'S EXCLUDED

Cable Pass-Through Cover (if applicable).

NOTES

Holes at 1 1/4" intervals on the inside walls of side panels allow for shelf adjustment.

With Cable Pass-Through option is **not** applicable with In-Line position (I).

Cable Pass-Through Ring comes in a Platinum Coordinate.

When End of Station (E) position is specified, only the (N) or (S) Cable Pass-Through option is avalaible.

PRODUCT OPTIONS

Front Style	Interior Configuration	Depth	Width	Height	Position
S Solid	**S** Shelves **W** Wardrobe	24, 30	12, 18	42, 51, 57	**E** End of Station **I** In-Line

SAMPLE ORDER CODE

JNFBS S	W	24	12	42	E

PRODUCT OPTIONS CONTINUED

Orientation	Door Front Finish	Edge Trim Finish (Laminate Front Only)	Case Finish	Cable Pass-Through	Key Style
L Door Swing – Left **R** Door Swing – Right (Shown)	Source Laminate Foundation Laminate	Edge Trim Colors	Source Laminate	**N** No Pass-Through (Shown) **S** Standard-Height Pass-Through **X** Not Applicable	**K** Keyed Alike **R** Keyed Randomly **N** No Lock

SAMPLE ORDER CODE

L	3D	4D	3D	N	K

See Pricing on the following page.

J N F B S
Beam Tower with Full Solid Door (Continued)

DIMENSIONS INCHES / MM

PRICING

D	W	H	WARDROBE (W) Source Laminate	WARDROBE (W) Foundation Laminate	SHELVES (S) Source Laminate	SHELVES (S) Foundation Laminate
24 / 610	12 / 305	42 / 1067	1042	1103	1177	1237
24 / 610	12 / 305	51 / 1295	1138	1211	1262	1335
24 / 610	12 / 305	57 / 1448	1257	1339	1382	1463
24 / 610	18 / 457	42 / 1067	1196	1286	1329	1421
24 / 610	18 / 457	51 / 1295	1291	1402	1414	1524
24 / 610	18 / 457	57 / 1448	1411	1534	1534	1658
30 / 762	12 / 305	42 / 1067	1089	1150	1221	1283
30 / 762	12 / 305	51 / 1295	1184	1257	1307	1382
30 / 762	12 / 305	57 / 1448	1326	1408	1392	1473
30 / 762	18 / 457	42 / 1067	1241	1333	1377	1467
30 / 762	18 / 457	51 / 1295	1337	1448	1462	1571
30 / 762	18 / 457	57 / 1448	1480	1603	1545	1669

J N F B G
Beam Tower with Full Glass Door

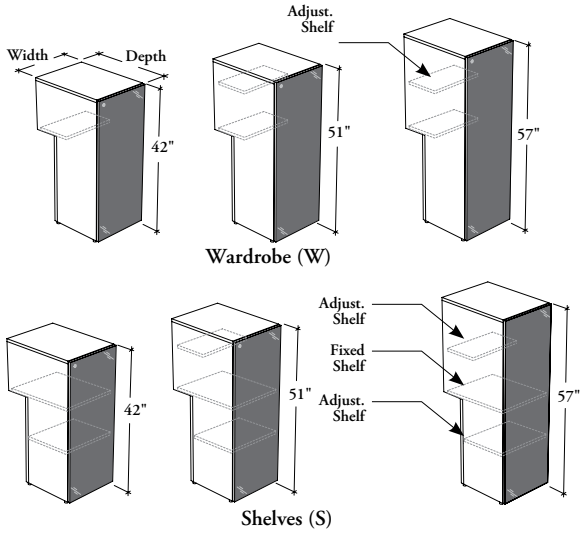

These beam towers provide storage area to store garments and other items, while supporting the front of a worksurface and let a beam pass-through.

WHAT'S INCLUDED
1 beam tower, levelers, 1 cable pass-through ring (as specified), 1 (12" w) or 2 (18" w) coat hooks (wardrobe only), locks and keys (if specified), beam mounting hardware, and accessories as listed below:

	Interior Configuration						Position		
	S			W				E	I
Heights	42"	51"	57"	42"	51"	57"			
Adjust. Shelf	1	2	2	n/a	1	1	Hang-On		
Fixed Shelf	1	1	1	n/a	n/a	n/a	Kit	1	2

WHAT'S EXCLUDED
Cable Pass-Through Cover (if applicable).

NOTES
Holes at 1 1/4" intervals on the inside walls of side panels allow for shelf adjustment.

With Cable Pass-Through option is **not** applicable with In-Line position (I).

Cable Pass-Through Ring comes in a Platinum Coordinate.

When End of Station (E) position is specified, only the (N) or (S) Cable Pass-Through option is avalaible.

PRODUCT OPTIONS

Interior Configuration	Depth	Width	Height	Position	Orientation
S Shelves	24, 30	12, 18	42, 51, 57	**E** End of Station	**L** Door Swing – Left
W Wardrobe				**I** In-Line	**R** Door Swing – Right (Shown)

SAMPLE ORDER CODE

JNFBG W	24	18	51	I	R

PRODUCT OPTIONS CONTINUED

Door Frame Finish	Glass Door Finish	Case Finish	Cable Pass-Through	Key Style
Foundation	Back-Painted	Source Laminate	**N** No Pass-Through (Shown)	**K** Keyed Alike
Mica			**S** Standard-Height Pass-Through	**R** Keyed Randomly
Accent			**X** Not Applicable	**N** No Lock

SAMPLE ORDER CODE

53	K1	3D	X	K

See Pricing on the following page.

J N F B G
Beam Tower with Full Glass Door (Continued)

DIMENSIONS INCHES / MM			PRICING		KEY UPCHARGE
			WARDROBE (W)	SHELVES (S)	
D	W	H	Back-Painted	Back-Painted	Keyed Alike or Keyed Randomly
24 / 610	12 / 305	42 / 1067	1333	1400	56
24 / 610	12 / 305	51 / 1295	1436	1499	56
24 / 610	12 / 305	57 / 1448	1559	1619	56
24 / 610	18 / 457	42 / 1067	1507	1640	56
24 / 610	18 / 457	51 / 1295	1609	1750	56
24 / 610	18 / 457	57 / 1448	1735	1883	56
30 / 762	12 / 305	42 / 1067	1380	1445	56
30 / 762	12 / 305	51 / 1295	1482	1544	56
30 / 762	12 / 305	57 / 1448	1598	1632	56
30 / 762	18 / 457	42 / 1067	1551	1643	56
30 / 762	18 / 457	51 / 1295	1655	1748	56
30 / 762	18 / 457	57 / 1448	1747	1840	56

J N F B D S

Dual Beam Tower with Full Solid Doors

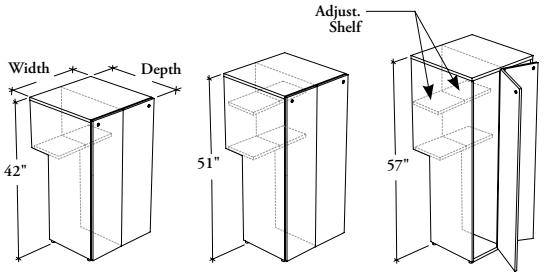

This beam tower provides storage area to store garments and other items for two users, while supporting the front of a worksurface and let a beam pass-through.

WHAT'S INCLUDED

1 beam tower, levelers, 2 hang-on kits (if in-line (I)), 1 coat hook on both sides, locks and keys (if specified), beam mounting hardware, and accessories as listed below:

	Heights			
	42"	51"	57"	
Adjustable Shelf	n/a	1	1	(on both sides)

NOTES

Both doors swing from the center divider to provide specific opening for each user.

Holes at 1 1/4" intervals on the inside walls of side panels allow for shelf adjustment.

PRODUCT OPTIONS

Front Style	Interior Configuration	Depth	Width	Height	Position	Door Front Finish	Edge Trim Finish (Laminate Front Only)	Case Finish	Cable Pass-Through	Key Style
S Solid	**W** Wardrobe	24, 30	18, 24	42, 51, 57	**I** In-Line	Source Laminate Foundation Laminate	Edge Trim Colors	Source Laminate	**X** Not Applicable	**K** Keyed Alike **R** Keyed Randomly **N** No Lock

SAMPLE ORDER CODE

JNFBDS S	W	24	18	42	I	3D	4D	3D	X	N

DIMENSIONS
INCHES / MM

PRICING

D	W	H	Source Laminate	Foundation Laminate
24 / 610	18 / 457	42 / 1067	1240	1329
24 / 610	18 / 457	51 / 1295	1387	1498
24 / 610	18 / 457	57 / 1448	1516	1637
24 / 610	24 / 610	42 / 1067	1406	1524
24 / 610	24 / 610	51 / 1295	1561	1708
24 / 610	24 / 610	57 / 1448	1691	1854
30 / 762	18 / 457	42 / 1067	1367	1459
30 / 762	18 / 457	51 / 1295	1516	1626
30 / 762	18 / 457	57 / 1448	1647	1770
30 / 762	24 / 610	42 / 1067	1534	1656
30 / 762	24 / 610	51 / 1295	1691	1837
30 / 762	24 / 610	57 / 1448	1820	1984

J N F T P L

Freestanding Tower with Drawers – Lateral Access

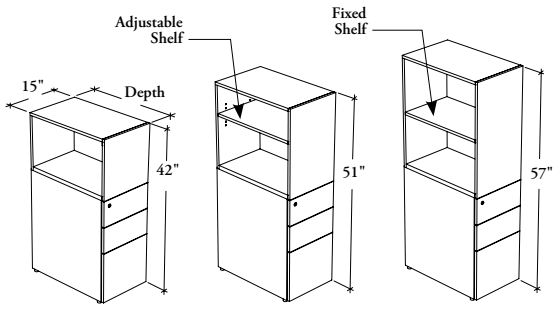

Lateral Access, Box, Box, File or File, File

These freestanding towers provide different storage possibilities, while supporting the worksurface.

WHAT'S INCLUDED
1 freestanding tower, levelers, locks and keys (if specified), and accessories as listed below:

	Heights		
	42"	51"	57"
Compartment (Lateral Access)	1	2	2
Adjust. Shelf	n/a	1	n/a
Fixed Shelf	n/a	n/a	1

WHAT'S EXCLUDED
Box Drawer Organizer, File Drawer Organizer and Hang-On Kit.

NOTES
Depth of drawers is fixed. Only the open section depth varies.

This storage unit has a central locking system.

File drawers can only accommodate legal size suspended files.

When Front Style (S) is specified, Pull Style and Pull Finish are **not** available.

PRODUCT OPTIONS

Front Style	Drawer Configuration	Depth	Width	Height	Orientation
S Solid	**B** Box, Box, File (Shown)	18, 24, 30	15	42, 51, 57	**L** Left
T Solid with Pull	**F** File, File				**R** Right (Shown)

SAMPLE ORDER CODE

JNFTPL S	F	18	15	42	L

PRODUCT OPTIONS CONTINUED

Front Finish	Edge Trim Finish (Laminate Front Only)	Case Finish	Pull Style (for Front Style (T) only)	Pull Finish (for Front Style (T) only)	Key Style
Source Laminate	Edge Trim Colors	Source Laminate	**C** Cityline Recessed	Foundation	**K** Keyed Alike
				Mica	**R** Keyed Randomly
				Accent	**N** No Lock

SAMPLE ORDER CODE

3D	4D	3D			K

See Pricing on the following page.

J N F T P L

Freestanding Tower with Drawers – Lateral Access (Continued)

DIMENSIONS INCHES / MM			PRICING	
			FILE, FILE (F)	BOX, BOX, FILE (B)
D	W	H	Source Laminate	Source Laminate
18 / 457	15 / 381	42 / 1067	1228	1293
18 / 457	15 / 381	51 / 1295	1372	1436
18 / 457	15 / 381	57 / 1448	1470	1532
24 / 610	15 / 381	42 / 1067	1343	1408
24 / 610	15 / 381	51 / 1295	1488	1551
24 / 610	15 / 381	57 / 1448	1586	1647
30 / 762	15 / 381	42 / 1067	1459	1522
30 / 762	15 / 381	51 / 1295	1603	1667
30 / 762	15 / 381	57 / 1448	1699	1766

J N F T W F

Freestanding Tower with Drawers and Wardrobe – Front Access

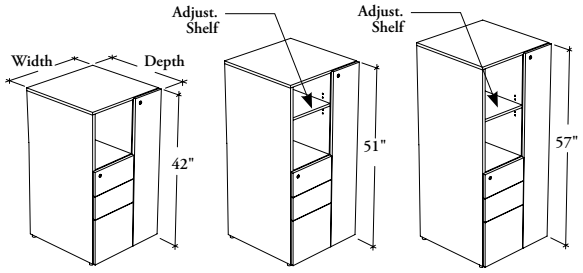

Front Access, Open Style, Box, Box, File or File, File

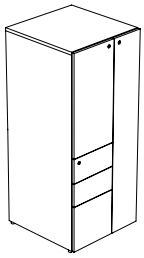

Front Access, Door Style, Box, Box, File or File, File

These freestanding towers provide storage area to store garments and other items and combine the filing capabilities of a pedestal.

WHAT'S INCLUDED

1 freestanding tower with half wardrobe, levelers, 1 coat hook (if 18" depth) or 1 coat rod (if 24" or 30" depth), locks and keys (if specified), and accessories as listed below:

	Height		
	42"	51"	57"
Compartment (Front Access)	1	2	2
Adjust. Shelf	n/a	1	1
Adjust. Shelf (Inside Wardrobe)	1	1	1

	Drawer Configuration	
	B	F
Pencil Drawer	1	n/a
Drawer Divider	1	n/a
12" Hang. File Bar	1	2

WHAT'S EXCLUDED

Box Drawer Organizer, File Drawer Organizer and Hang-On Kit.

NOTES

When Front Style (S) is specified, Pull Style and Pull Finish are **not** available.

Holes at 1 1/4" intervals on the inside walls of side panels of the top section and wardrobe allow for shelf adjustment.

Depth and width of drawers is fixed.

Included hanging file bars are to be installed along the width only.

This storage unit has a central locking system.

PRODUCT OPTIONS

Front Style	Style	Drawer Configuration	Depth	Width	Height	Orientation
S Solid	**D** Door	**B** Box, Box, File (Shown)	18, 24, 30	24, 30	42, 51, 57	**L** Left
T Solid with Pull	**O** Open	**F** File, File				**R** Right (Shown)

SAMPLE ORDER CODE

JNFTWF S	O	F	18	24	42	L

PRODUCT OPTIONS CONTINUED

Front Finish	Edge Trim Finish (Laminate Front Only)	Case Finish	Pull Style (for Front Style (T) only)	Pull Finish (for Front Style (T) only)	Key Style
Source Laminate	Edge Trim Colors	Source Laminate	**C** Cityline Recessed	Foundation	**K** Keyed Alike
				Mica	**R** Keyed Randomly
				Accent	**N** No Lock

SAMPLE ORDER CODE

3D	4D	3D			K

See Pricing on the following page.

J N F T W F

Freestanding Tower with Drawers and Wardrobe – Front Access (Continued)

DIMENSIONS INCHES / MM

PRICING

OPEN (O)

D	W	H	FILE, FILE (F) Source Laminate	FILE, FILE (F) Foundation Laminate	BOX, BOX, FILE (B) Source Laminate	BOX, BOX, FILE (B) Foundation Laminate
18 / 457	24 / 610	42 / 1067	1696	1788	1759	1848
18 / 457	24 / 610	51 / 1295	1836	1946	1897	2009
18 / 457	24 / 610	57 / 1448	1927	2051	1989	2112
18 / 457	30 / 762	42 / 1067	1819	1934	1883	1995
18 / 457	30 / 762	51 / 1295	1960	2097	2021	2160
18 / 457	30 / 762	57 / 1448	2038	2190	2098	2252
24 / 610	24 / 610	42 / 1067	1806	1895	1868	1959
24 / 610	24 / 610	51 / 1295	1943	2053	2006	2116
24 / 610	24 / 610	57 / 1448	2038	2161	2098	2221
24 / 610	30 / 762	42 / 1067	1927	2042	1989	2102
24 / 610	30 / 762	51 / 1295	2067	2204	2129	2268
24 / 610	30 / 762	57 / 1448	2123	2275	2184	2337
30 / 762	24 / 610	42 / 1067	1914	2004	1975	2066
30 / 762	24 / 610	51 / 1295	2051	2162	2112	2223
30 / 762	24 / 610	57 / 1448	2144	2269	2205	2330
30 / 762	30 / 762	42 / 1067	2038	2151	2098	2213
30 / 762	30 / 762	51 / 1295	2174	2313	2238	2375
30 / 762	30 / 762	57 / 1448	2286	2438	2347	2501

DOOR (D)

18 / 457	24 / 610	42 / 1067	1768	1890	1832	1951
18 / 457	24 / 610	51 / 1295	1907	2053	1969	2116
18 / 457	24 / 610	57 / 1448	1999	2163	2062	2225
18 / 457	30 / 762	42 / 1067	1923	2074	1984	2134
18 / 457	30 / 762	51 / 1295	2062	2246	2124	2306
18 / 457	30 / 762	57 / 1448	2155	2362	2217	2422
24 / 610	24 / 610	42 / 1067	1884	2004	1945	2066
24 / 610	24 / 610	51 / 1295	2028	2175	2093	2240
24 / 610	24 / 610	57 / 1448	2116	2279	2176	2341
24 / 610	30 / 762	42 / 1067	2039	2189	2100	2250
24 / 610	30 / 762	51 / 1295	2176	2363	2241	2423
24 / 610	30 / 762	57 / 1448	2270	2475	2332	2538
30 / 762	24 / 610	42 / 1067	2008	2127	2068	2189
30 / 762	24 / 610	51 / 1295	2153	2300	2216	2363
30 / 762	24 / 610	57 / 1448	2241	2404	2301	2465
30 / 762	30 / 762	42 / 1067	2162	2313	2223	2375
30 / 762	30 / 762	51 / 1295	2301	2486	2364	2546
30 / 762	30 / 762	57 / 1448	2384	2590	2448	2653

J N F T S

Freestanding Tower with Full Solid Door

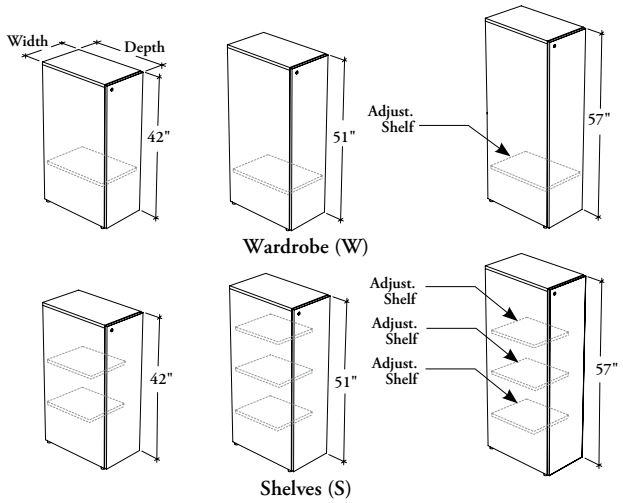

These freestanding towers provide storage area to store garments and other items.

WHAT'S INCLUDED
1 freestanding tower, levelers, locks and keys (if specified), and accessories as listed below:

Interior Configuration	S			W		
Heights	42"	51"	57"	42"	51"	57"
Adjust. Shelf	2	3	3	1	1	1

	W			
Depths	15"	18"	24"	30"
Coat Hook	1	1	n/a	n/a
Coat Rod	n/a	n/a	1	1

WHAT'S EXCLUDED
Hang-On Kit.

NOTES
Can be used freestanding or connected to a worksurface with Hang-On Kit.

Holes at 1 1/4" intervals on the inside walls of side panels allow for shelf adjustment.

PRODUCT OPTIONS

Front Style	Interior Configuration	Depth	Width	Height	Orientation	Door Front Finish	Edge Trim Finish (Laminate Front Only)	Case Finish	Key Style
S Solid	**S** Shelves **W** Wardrobe	15, 18, 24, 30	12	42, 51, 57	**L** Door Swing – Left **R** Door Swing – Right (Shown)	Source Laminate Foundation Laminate	Edge Trim Colors	Source Laminate	**K** Keyed Alike **R** Keyed Randomly **N** No Lock

SAMPLE ORDER CODE

JNFTS S	S	15	12	42	L	3D	4D	3D	K

DIMENSIONS
INCHES / MM

D	W	H
15 / 381	12 / 305	42 / 1067
15 / 381	12 / 305	51 / 1295
15 / 381	12 / 305	57 / 1448
18 / 457	12 / 305	42 / 1067
18 / 457	12 / 305	51 / 1295
18 / 457	12 / 305	57 / 1448
24 / 610	12 / 305	42 / 1067
24 / 610	12 / 305	51 / 1295
24 / 610	12 / 305	57 / 1448
30 / 762	12 / 305	42 / 1067
30 / 762	12 / 305	51 / 1295
30 / 762	12 / 305	57 / 1448

PRICING

WARDROBE (W)	
Source Laminate	Foundation Laminate
931	991
1057	1130
1157	1238
956	1017
1092	1165
1204	1285
1042	1103
1138	1211
1257	1339
1089	1150
1184	1257
1326	1408

SHELVES (S)	
Source Laminate	Foundation Laminate
1034	1094
1168	1241
1279	1362
1080	1141
1216	1288
1327	1409
1177	1237
1262	1335
1382	1463
1221	1283
1307	1382
1392	1473

JNFTG
Freestanding Tower with Full Glass Door

These freestanding towers provide storage area to store garments and other items or shelving.

WHAT'S INCLUDED
1 freestanding tower, levelers, locks and keys (if specified), and accessories as listed below:

	Interior Configuration					
	S			W		
Heights	42"	51"	57"	42"	51"	57"
Adjust. Shelf	2	3	3	1	1	1

	W			
Depths	15"	18"	24"	30"
Coat Hook	1	1	n/a	n/a
Coat Rod	n/a	n/a	1	1

WHAT'S EXCLUDED
Hang-On Kit.

NOTES
Can be used freestanding or connected to a worksurface with Hang-On Kit.

Holes at 1 1/4" intervals on the inside walls of side panels allow for shelf adjustment.

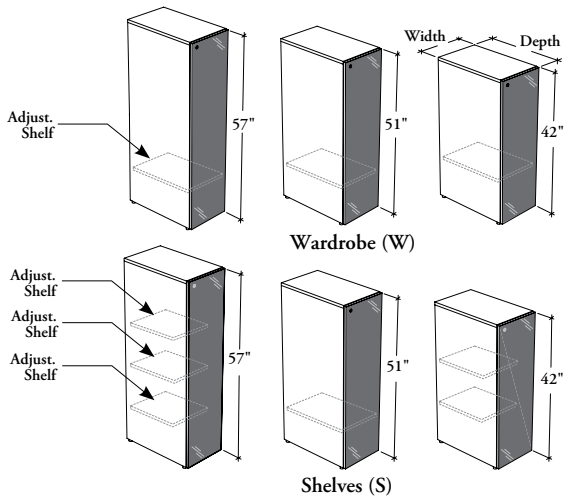

PRODUCT OPTIONS

Interior Configuration	Depth	Width	Height	Orientation	Door Frame Finish	Glass Door Finish	Case Finish	Key Style
S Shelves **W** Wardrobe	15, 18, 24, 30	12	42, 51, 57	**L** Door Swing – Left **R** Door Swing – Right (Shown)	Foundation Mica Accent	Back-Painted	Source Laminate	**K** Keyed Alike **R** Keyed Randomly **N** No Lock

SAMPLE ORDER CODE

JNFTG W	30	12	57	R	53	K1	3D	N

DIMENSIONS INCHES / MM

PRICING

D	W	H	WARDROBE (W) Back-Painted	SHELVES (S) Back-Painted	KEY UPCHARGE Keyed Alike or Keyed Randomly
15 / 381	12 / 305	42 / 1067	1195	1257	56
15 / 381	12 / 305	51 / 1295	1344	1405	56
15 / 381	12 / 305	57 / 1448	1459	1520	56
18 / 457	12 / 305	42 / 1067	1240	1304	56
18 / 457	12 / 305	51 / 1295	1391	1452	56
18 / 457	12 / 305	57 / 1448	1505	1566	56
24 / 610	12 / 305	42 / 1067	1333	1400	56
24 / 610	12 / 305	51 / 1295	1436	1499	56
24 / 610	12 / 305	57 / 1448	1559	1619	56
30 / 762	12 / 305	42 / 1067	1380	1445	56
30 / 762	12 / 305	51 / 1295	1482	1544	56
30 / 762	12 / 305	57 / 1448	1598	1632	56

J N F T T S

Freestanding Tower with Two Full Solid Doors

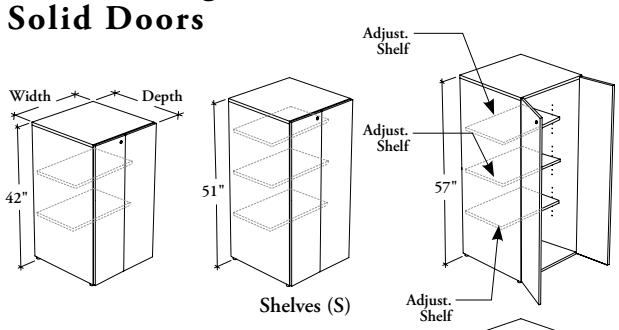

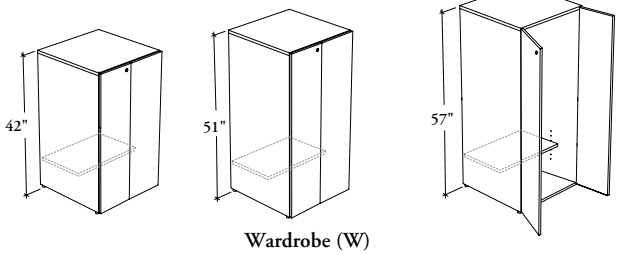

These freestanding towers provide a storage space for garments and other items.

WHAT'S INCLUDED
1 freestanding tower, levelers, 1 coat rod (wardrobe only), locks and keys (if specified), and accessories as listed below:

	Interior Configuration					
	S			W		
Heights	42"	51"	57"	42"	51"	57"
Adjust. Shelf	2	3	3	1	1	1

WHAT'S EXCLUDED
Hang-On Kit.

NOTES
Can be used freestanding or connected to a worksurface with Hang-On Kit.

Holes at 1 1/4" intervals on the inside walls of side panels allow for shelf adjustment.

Depth 18" is **not** available when Wardrobe (W) is specified.

PRODUCT OPTIONS

Front Style	Interior Configuration	Depth	Width	Height	Door Front Finish	Edge Trim Finish	Case Finish	Key Style
S Solid	**S** Shelves **W** Wardrobe	18, 24, 30	24, 30, 36	42, 51, 57	Source Laminate Foundation Laminate	Edge Trim Colors	Source Laminate	**K** Keyed Alike **R** Keyed Randomly **N** No Lock

SAMPLE ORDER CODE

JNFTTS S	S	18	24	42	3D	4D	3D	K

DIMENSIONS
INCHES / MM

PRICING

D	W	H	WARDROBE (W) Source Laminate	WARDROBE (W) Foundation Laminate	SHELVES (S) Source Laminate	SHELVES (S) Foundation Laminate
18 / 457	24 / 610	42 / 1067	n/a	n/a	1226	1346
18 / 457	24 / 610	51 / 1295	n/a	n/a	1363	1510
18 / 457	24 / 610	57 / 1448	n/a	n/a	1480	1643
18 / 457	30 / 762	42 / 1067	n/a	n/a	1344	1494
18 / 457	30 / 762	51 / 1295	n/a	n/a	1491	1675
18 / 457	30 / 762	57 / 1448	n/a	n/a	1608	1813
18 / 457	36 / 914	42 / 1067	n/a	n/a	1452	1633
18 / 457	36 / 914	51 / 1295	n/a	n/a	1598	1818
18 / 457	36 / 914	57 / 1448	n/a	n/a	1712	1957
24 / 610	24 / 610	42 / 1067	1255	1373	1321	1442
24 / 610	24 / 610	51 / 1295	1393	1540	1462	1608
24 / 610	24 / 610	57 / 1448	1509	1672	1574	1739

Pricing is continued on the following page.

JNFTTS

Freestanding Tower with Two Full Solid Doors (Continued)

DIMENSIONS INCHES / MM

PRICING

D	W	H	WARDROBE (W) Source Laminate	WARDROBE (W) Foundation Laminate	SHELVES (S) Source Laminate	SHELVES (S) Foundation Laminate
24 / 610	30 / 762	42 / 1067	1332	1482	1470	1619
24 / 610	30 / 762	51 / 1295	1479	1661	1616	1800
24 / 610	30 / 762	57 / 1448	1593	1799	1732	1937
24 / 610	36 / 914	42 / 1067	1416	1597	1470	1650
24 / 610	36 / 914	51 / 1295	1563	1783	1616	1836
24 / 610	36 / 914	57 / 1448	1675	1921	1730	1975
30 / 762	24 / 610	42 / 1067	1369	1491	1436	1558
30 / 762	24 / 610	51 / 1295	1509	1655	1574	1721
30 / 762	24 / 610	57 / 1448	1625	1789	1691	1856
30 / 762	30 / 762	42 / 1067	1445	1597	1587	1737
30 / 762	30 / 762	51 / 1295	1593	1776	1732	1917
30 / 762	30 / 762	57 / 1448	1711	1916	1847	2052
30 / 762	36 / 914	42 / 1067	1531	1713	1587	1767
30 / 762	36 / 914	51 / 1295	1677	1897	1732	1952
30 / 762	36 / 914	57 / 1448	1801	2046	1854	2100

J N F K S
Supporting Storage Kit

The Supporting Storage Kit attaches a storage to the underside of a worksurface.

WHAT'S INCLUDED
4 round plastic supporting spacers and mounting hardware.

NOTES
This kit is always included with Pedestal (JNFPS), Combo Pedestal (JNFCP), Lateral File (JNFLF) and 28" high Bookcase (JNFLBL and JNFBM).

Kit is finished in black.

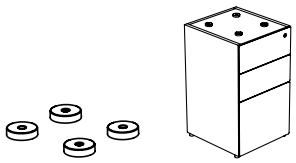

PRICING

13

J N F K L
Lateral Linking Plate

The Lateral Linking Plate links the front of 2 contiguous worksurfaces over a Freestanding Storage.

WHAT'S INCLUDED
1 lateral linking plate and mounting hardware.

WHAT'S EXCLUDED
Supporting Storage Kit.

NOTES
Finished in black.

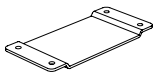

PRICING

61

The Hang-On Kit attaches a worksurface on the side or back of a Freestanding Storage.

WHAT'S INCLUDED
1 hang-on kit and mounting hardware.

J N F K H
Hang-On Kit

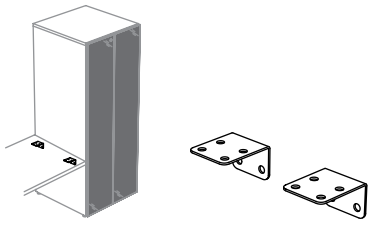

PRODUCT OPTIONS

Finish

52 Ebony
Coordinate Colors

SAMPLE ORDER CODE

JNFKH 52

PRICING

42

J N F A L B
Hanging File Bar

Hanging File Bars are installed in file drawers to allow hanging of suspended files.

WHAT'S INCLUDED
1 metal hanging file bar.

NOTES
Please refer to the Application Guide for compatibility.

Finished in black.

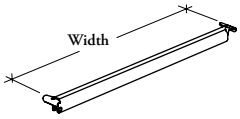

PRODUCT OPTIONS

Width
12, 15

SAMPLE ORDER CODE

JNFALB 12

DIMENSIONS INCHES / MM

W
12 / 305
15 / 381

PRICING

10
13

K
Locks and Keys

WHAT'S INCLUDED
Style M: 1 Master Key.

Style R: 1 Lock Removal Key.

Style C: 1 Lock Core and Keys.

NOTES
The Master Key unlocks any storage unit.

The Lock Removal Key removes lock cores from storage units.

Lock Cores and Keys are replacements for those currently installed.

Master Key

Lock Removal Key

Lock Core and Keys

PRODUCT OPTIONS

Style

M Master Key
R Lock Removal Key
C Lock Core and Keys

SAMPLE ORDER CODE

K C

STYLE	PRICING
M	7
R	7
C	29

S O K L
Set of Keys Alike

WHAT'S INCLUDED
Each set of cores include a lock & core and 2 identical keys.

NOTES
All storage furniture is shipped with the lock housing pre-installed in each unit ready to receive the required lock plug cores. Based on the product option, lock cores and keys are shipped either numbered randomly or in "keyed-alike" sets. Quantity of lock cores and keys will match the quantities required for the locking components on the order.

SPECIFICATION NOTES
Count the number of locking components in each workstation. Enter the number of locks into the Quantity column, and then assign a SET to each quantity.

Office Number	Quantity	Set #	Set Total
T1	4	SOKL - 4	1
T2	2	SOKL - 2	1
T3	4	SOKL - 4	1
T4	3	SOKL - 3	1

Total the number of SOKL (Sets of Keys Alike) quantities and transfer each total quantity to your Purchase Order.

Sets ordered in the incorrect quantities that are required for the order may result in the order being placed on hold.

Please verify the quantity by reviewing the plan carefully to ensure that all products with locks have been identified. Remember that some products may have more than one lock core per unit based on size and configuration.

For further details on how to specify locks, please see the Teknion Lock Specification Guide on our website.

PRODUCT OPTIONS

Number of Sets of Cores			
01 1 Set of Cores	**07** 7 Sets of Cores	**13** 13 Sets of Cores	**19** 19 Sets of Cores
02 2 Sets of Cores	**08** 8 Sets of Cores	**14** 14 Sets of Cores	**20** 20 Sets of Cores
03 3 Sets of Cores	**09** 9 Sets of Cores	**15** 15 Sets of Cores	
04 4 Sets of Cores	**10** 10 Sets of Cores	**16** 16 Sets of Cores	
05 5 Sets of Cores	**11** 11 Sets of Cores	**17** 17 Sets of Cores	
06 6 Sets of Cores	**12** 12 Sets of Cores	**18** 18 Sets of Cores	

SAMPLE ORDER CODE

SOKL 02

lockers

lockers product map

J L F F D Locker – Full Doors

Page 1306

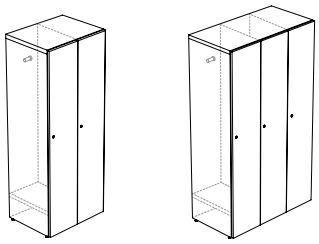

J L F C 2 Locker – Two-High Cubby

Page 1312

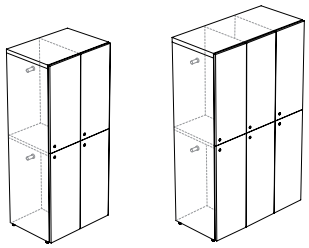

J L F C 3 Locker – Three-High Cubby

Page 1318

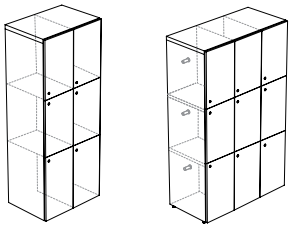

J L F F G Locker – Full Glass Doors

Page 1322

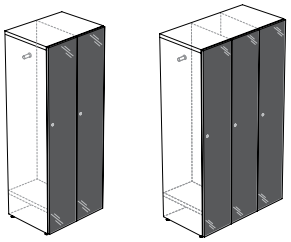

J L F B 2 Open Locker – Two-High Cubby

Page 1324

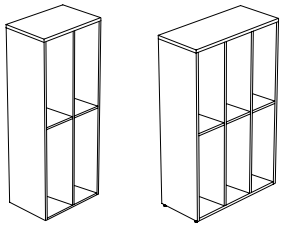

J L F B 3 Open Locker – Three-High Cubby

Page 1325

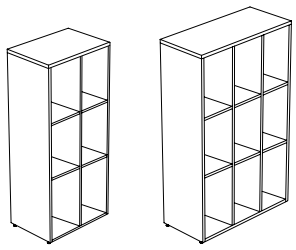

J L F S D Common Locker – Full Doors

Page 1326

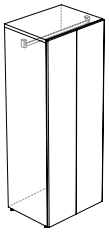

J L F S G Common Locker – Full Glass Doors

Page 1328

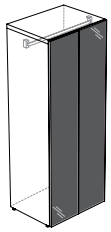

lockers product map

J L F R U Recycling/Disposal Unit

Page 1330

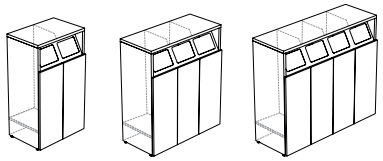

J L F R S Recycling/Disposal Unit with Storage

Page 1332

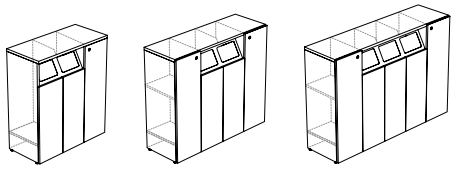

J L E F D Elevated Locker – Full Doors

Page 1334

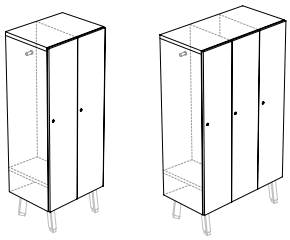

J L E C 2 Elevated Locker – Two-High Cubby

Page 1340

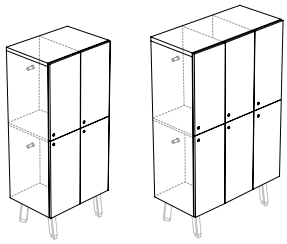

J L E C 3 Elevated Locker – Three-High Cubby

Page 1346

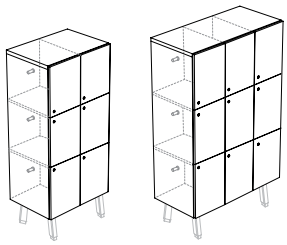

J L E F G Elevated Locker – Full Glass Doors

Page 1350

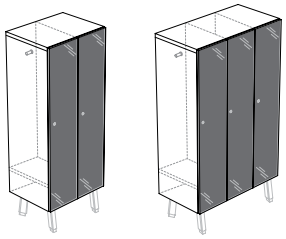

J L E B 2 Elevated Open Locker – Two-High Cubby

Page 1352

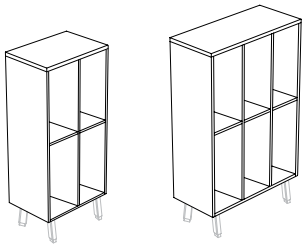

J L E B 3 Elevated Open Locker – Three-High Cubby

Page 1353

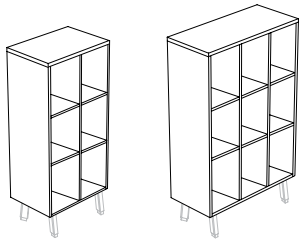

lockers product map

J L E S D Elevated Common Locker – Full Doors

Page 1354

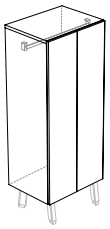

J L E S G Elevated Common Locker – Full Glass Doors

Page 1356

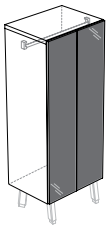

J L E R U Elevated Recycling/Disposal Unit

Page 1358

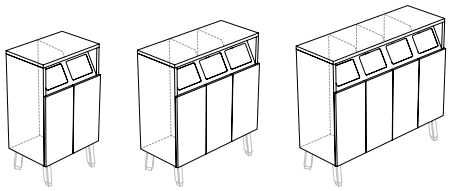

J L E F K Angled Foot Kit Elevated Locker

Page 1360

J L A N N Locker Number

Page 1361

J L A S R Recycling/Disposal Unit Symbol

Page 1362

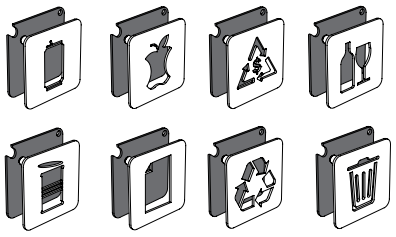

J L A S S Common Locker Symbol

Page 1363

J L K E E Digital Lock Key

Page 1364

J L F F D
Locker – Full Doors

This Locker with Full Doors provides secured individual storage ideal for coat and personal items. This freestanding unit is offered in dual or triple configurations, and can be ganged with other lockers to create a bank of lockers.

WHAT'S INCLUDED

1 case with levelers, 2 or 3 doors, digital numeric keypad locks or locks and keys (as specified), and accessories listed below:

Interior Config.	Side Hook	Adjust. Shelf
H	2	0 (42" or 51" h) per section
O	2	1 (42" to 66" h) per section
T	2	2 (57" or 66" h) per section

WHAT'S EXCLUDED

Boot Tray, Locker Number and Digital Lock Key.

NOTES

When Front Style (M, N or O) is specified, only Metal Door Front Finish is available.

When Front Style (S, T or U) is specified, only Laminate Door Front Finish is available.

When Front Style (M, O, S or U) is specified, Pull Style and Pull Finish are **not** available.

When Front Style (M, N, S or T) is specified, only Key Style (K, N or R) is available.

When Front Style (O or U) is specified, only Key Style (A) is available.

The digital lock defaults to Versa Mini Basic 6th Generation, Keypad operation, Recess mount, Vertical orientation and finish in brushed nickel.

If the key are needed to operate the digital lock and set up different levels of access, specify JLKEE (Digital Lock Key).

Side Hooks come in Platinum finish only.

Shelf(ves) match(es) the Case Finish.

Refer to application guide.

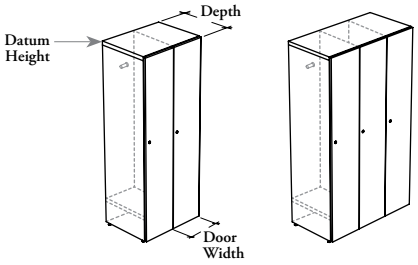

Dual (D) Triple (T)

PRODUCT OPTIONS

Front Style	Datum Height	Depth	Door Width	Configuration	Orientation	Identification
M Metal **N** Metal with Pull **O** Metal with Digital Lock **S** Solid (Shown) **T** Solid with Pull **U** Solid with Digital Lock	42, 51, 57, 66	18, 24	12, 15	**D** Dual **T** Triple	**L** Door Swing – Left **R** Door Swing – Right (Shown)	**N** No Identification (Shown) **R** Number Ready

SAMPLE ORDER CODE

JLFFD S	42	18	12	D	R	N

PRODUCT OPTIONS CONTINUED

Interior Configuration	Door Front Finish	Edge Trim Finish (Laminate Front only)	Case Finish	Pull Style (for Front Style (N or T) only)	Pull Finish (for Front Style (N or T) only)	Key Style
H Side Hooks **O** Side Hooks & Shelf (Shown) **T** Side Hooks & 2 Shelves	**Metal Front:** (for metal front style) Foundation Mica Accent **Laminate Front:** (for solid front style) Source Laminate Foundation Laminate	Edge Trim Colors	Source Laminate	**C** Cityline Recessed	Foundation Mica Accent	**A** Digital Lock Assigned **K** Keyed Alike **R** Keyed Randomly **N** No Lock

SAMPLE ORDER CODE CONTINUED

H	3D	4D	3D			K

See Pricing on the following page.

J L F F D
Locker – Full Doors (Continued)

DIMENSIONS INCHES / MM | **PRICING**

METAL (M)

12" DOOR WIDTH

H	D	DUAL (D) Side Hooks (H)	DUAL (D) Side Hooks & Shelf (O)	DUAL (D) Side Hooks & 2 Shelves (T)	TRIPLE (T) Side Hooks (H)	TRIPLE (T) Side Hooks & Shelf (O)	TRIPLE (T) Side Hooks & 2 Shelves (T)
42 / 1067	18 / 457	1600	1696	n/a	2130	2274	n/a
42 / 1067	24 / 610	1711	1807	n/a	2297	2441	n/a
51 / 1295	18 / 457	1759	1855	n/a	2367	2511	n/a
51 / 1295	24 / 610	1894	1990	n/a	2557	2701	n/a
57 / 1448	18 / 457	n/a	1964	2060	n/a	2672	2816
57 / 1448	24 / 610	n/a	2114	2210	n/a	2878	3022
66 / 1676	18 / 457	n/a	2124	2220	n/a	2909	3053
66 / 1676	24 / 610	n/a	2296	2392	n/a	3138	3282

15" DOOR WIDTH

H	D	DUAL (D) Side Hooks (H)	DUAL (D) Side Hooks & Shelf (O)	DUAL (D) Side Hooks & 2 Shelves (T)	TRIPLE (T) Side Hooks (H)	TRIPLE (T) Side Hooks & Shelf (O)	TRIPLE (T) Side Hooks & 2 Shelves (T)
42 / 1067	18 / 457	1740	1836	n/a	2343	2487	n/a
42 / 1067	24 / 610	1854	1950	n/a	2523	2667	n/a
51 / 1295	18 / 457	1922	2018	n/a	2613	2757	n/a
51 / 1295	24 / 610	2061	2157	n/a	2816	2960	n/a
57 / 1448	18 / 457	n/a	2140	2236	n/a	2938	3082
57 / 1448	24 / 610	n/a	2296	2392	n/a	3156	3300
66 / 1676	18 / 457	n/a	2322	2418	n/a	3209	3353
66 / 1676	24 / 610	n/a	2503	2599	n/a	3449	3593

SOLID (S)

12" DOOR WIDTH

		DUAL (D) SIDE HOOKS (H)		DUAL (D) SIDE HOOKS & SHELF (O)		DUAL (D) SIDE HOOKS & 2 SHELVES (T)		TRIPLE (T) SIDE HOOKS (H)		TRIPLE (T) SIDE HOOKS & SHELF (O)		TRIPLE (T) SIDE HOOKS & 2 SHELVES (T)	
		Source Laminate	Foundation Laminate	Source Laminate	Foundation Laminate	Source Laminate	Foundation Laminate	Source Laminate	Foundation Laminate	Source Laminate	Foundation Laminate	Source Laminate	Foundation Laminate
42 / 1067	18 / 457	1414	1540	1510	1636	n/a	n/a	1851	2040	1995	2184	n/a	n/a
42 / 1067	24 / 610	1525	1651	1621	1747	n/a	n/a	2018	2207	2162	2351	n/a	n/a
51 / 1295	18 / 457	1519	1673	1615	1769	n/a	n/a	2007	2238	2151	2382	n/a	n/a
51 / 1295	24 / 610	1654	1808	1750	1904	n/a	n/a	2197	2428	2341	2572	n/a	n/a
57 / 1448	18 / 457	n/a	n/a	1686	1858	1782	1954	n/a	n/a	2255	2513	2399	2657
57 / 1448	24 / 610	n/a	n/a	1836	2008	1932	2104	n/a	n/a	2461	2719	2605	2863
66 / 1676	18 / 457	n/a	n/a	1792	1990	1888	2086	n/a	n/a	2411	2708	2555	2852
66 / 1676	24 / 610	n/a	n/a	1964	2162	2060	2258	n/a	n/a	2640	2937	2784	3081

Pricing is continued on the following page.

J L F F D

Locker – Full Doors (Continued)

DIMENSIONS INCHES / MM

PRICING

SOLID (S) (CONTINUED)

15" DOOR WIDTH

H	D	DUAL (D) SIDE HOOKS (H) Source Laminate	DUAL (D) SIDE HOOKS (H) Foundation Laminate	DUAL (D) SIDE HOOKS & SHELF (O) Source Laminate	DUAL (D) SIDE HOOKS & SHELF (O) Foundation Laminate	DUAL (D) SIDE HOOKS & 2 SHELVES (T) Source Laminate	DUAL (D) SIDE HOOKS & 2 SHELVES (T) Foundation Laminate	TRIPLE (T) SIDE HOOKS (H) Source Laminate	TRIPLE (T) SIDE HOOKS (H) Foundation Laminate	TRIPLE (T) SIDE HOOKS & SHELF (O) Source Laminate	TRIPLE (T) SIDE HOOKS & SHELF (O) Foundation Laminate	TRIPLE (T) SIDE HOOKS & 2 SHELVES (T) Source Laminate	TRIPLE (T) SIDE HOOKS & 2 SHELVES (T) Foundation Laminate
42 / 1067	18 / 457	1492	1650	1588	1746	n/a	n/a	1971	2208	2115	2352	n/a	n/a
42 / 1067	24 / 610	1606	1764	1702	1860	n/a	n/a	2151	2388	2295	2532	n/a	n/a
51 / 1295	18 / 457	1606	1798	1702	1894	n/a	n/a	2139	2427	2283	2571	n/a	n/a
51 / 1295	24 / 610	1745	1937	1841	2033	n/a	n/a	2342	2630	2486	2774	n/a	n/a
57 / 1448	18 / 457	n/a	n/a	1778	1992	1874	2088	n/a	n/a	2395	2716	2539	2860
57 / 1448	24 / 610	n/a	n/a	1934	2148	2030	2244	n/a	n/a	2613	2934	2757	3078
66 / 1676	18 / 457	n/a	n/a	1892	2140	1988	2236	n/a	n/a	2564	2936	2708	3080
66 / 1676	24 / 610	n/a	n/a	2073	2321	2169	2417	n/a	n/a	2804	3176	2948	3320

METAL WITH PULL (N)

12" DOOR WIDTH

H	D	DUAL (D) Side Hooks (H)	DUAL (D) Side Hooks & Shelf (O)	DUAL (D) Side Hooks & 2 Shelves (T)	TRIPLE (T) Side Hooks (H)	TRIPLE (T) Side Hooks & Shelf (O)	TRIPLE (T) Side Hooks & 2 Shelves (T)
42 / 1067	18 / 457	1732	1828	n/a	2328	2472	n/a
42 / 1067	24 / 610	1843	1939	n/a	2495	2639	n/a
51 / 1295	18 / 457	1891	1987	n/a	2565	2709	n/a
51 / 1295	24 / 610	2026	2122	n/a	2755	2899	n/a
57 / 1448	18 / 457	n/a	2096	2192	n/a	2870	3014
57 / 1448	24 / 610	n/a	2246	2342	n/a	3076	3220
66 / 1676	18 / 457	n/a	2256	2352	n/a	3107	3251
66 / 1676	24 / 610	n/a	2428	2524	n/a	3336	3480

15" DOOR WIDTH

42 / 1067	18 / 457	1872	1968	n/a	2541	2685	n/a
42 / 1067	24 / 610	1986	2082	n/a	2721	2865	n/a
51 / 1295	18 / 457	2054	2150	n/a	2811	2955	n/a
51 / 1295	24 / 610	2193	2289	n/a	3014	3158	n/a
57 / 1448	18 / 457	n/a	2272	2368	n/a	3136	3280
57 / 1448	24 / 610	n/a	2428	2524	n/a	3354	3498
66 / 1676	18 / 457	n/a	2454	2550	n/a	3407	3551
66 / 1676	24 / 610	n/a	2635	2731	n/a	3647	3791

Pricing is continued on the following page.

J L F F D
Locker – Full Doors (Continued)

DIMENSIONS INCHES / MM | **PRICING**

SOLID WITH PULL (T)

12" DOOR WIDTH

		DUAL (D)						TRIPLE (T)					
		SIDE HOOKS (H)		SIDE HOOKS & SHELF (O)		SIDE HOOKS & 2 SHELVES (T)		SIDE HOOKS (H)		SIDE HOOKS & SHELF (O)		SIDE HOOKS & 2 SHELVES (T)	
H	D	Source Laminate	Foundation Laminate	Source Laminate	Foundation Laminate	Source Laminate	Foundation Laminate	Source Laminate	Foundation Laminate	Source Laminate	Foundation Laminate	Source Laminate	Foundation Laminate
42 / 1067	18 / 457	1530	1656	1626	1752	n/a	n/a	2025	2214	2169	2358	n/a	n/a
42 / 1067	24 / 610	1641	1767	1737	1863	n/a	n/a	2192	2381	2336	2525	n/a	n/a
51 / 1295	18 / 457	1635	1789	1731	1885	n/a	n/a	2181	2412	2325	2556	n/a	n/a
51 / 1295	24 / 610	1770	1924	1866	2020	n/a	n/a	2371	2602	2515	2746	n/a	n/a
57 / 1448	18 / 457	n/a	n/a	1802	1974	1898	2070	n/a	n/a	2429	2687	2573	2831
57 / 1448	24 / 610	n/a	n/a	1952	2124	2048	2220	n/a	n/a	2635	2893	2779	3037
66 / 1676	18 / 457	n/a	n/a	1908	2106	2004	2202	n/a	n/a	2585	2882	2729	3026
66 / 1676	24 / 610	n/a	n/a	2080	2278	2176	2374	n/a	n/a	2814	3111	2958	3255

15" DOOR WIDTH

42 / 1067	18 / 457	1608	1766	1704	1862	n/a	n/a	2145	2382	2289	2526	n/a	n/a
42 / 1067	24 / 610	1722	1880	1818	1976	n/a	n/a	2325	2562	2469	2706	n/a	n/a
51 / 1295	18 / 457	1722	1914	1818	2010	n/a	n/a	2313	2601	2457	2745	n/a	n/a
51 / 1295	24 / 610	1861	2053	1957	2149	n/a	n/a	2516	2804	2660	2948	n/a	n/a
57 / 1448	18 / 457	n/a	n/a	1894	2108	1990	2204	n/a	n/a	2569	2890	2713	3034
57 / 1448	24 / 610	n/a	n/a	2050	2264	2146	2360	n/a	n/a	2787	3108	2931	3252
66 / 1676	18 / 457	n/a	n/a	2008	2256	2104	2352	n/a	n/a	2738	3110	2882	3254
66 / 1676	24 / 610	n/a	n/a	2189	2437	2285	2533	n/a	n/a	2978	3350	3122	3494

METAL WITH DIGITAL LOCK (O)

12" DOOR WIDTH

		DUAL (D)			TRIPLE (T)		
		Side Hooks (H)	Side Hooks & Shelf (O)	Side Hooks & 2 Shelves (T)	Side Hooks (H)	Side Hooks & Shelf (O)	Side Hooks & 2 Shelves (T)
42 / 1067	18 / 457	2062	2158	n/a	2823	2967	n/a
42 / 1067	24 / 610	2173	2269	n/a	2990	3134	n/a
51 / 1295	18 / 457	2221	2317	n/a	3060	3204	n/a
51 / 1295	24 / 610	2356	2452	n/a	3250	3394	n/a
57 / 1448	18 / 457	n/a	2426	2522	n/a	3365	3509
57 / 1448	24 / 610	n/a	2576	2672	n/a	3571	3715
66 / 1676	18 / 457	n/a	2586	2682	n/a	3602	3746
66 / 1676	24 / 610	n/a	2758	2854	n/a	3831	3975

Pricing is continued on the following page.

J L F F D

Locker – Full Doors (Continued)

DIMENSIONS INCHES / MM | **PRICING**

METAL WITH DIGITAL LOCK (O) (CONTINUED)

15" DOOR WIDTH

H	D	DUAL (D) Side Hooks (H)	DUAL (D) Side Hooks & Shelf (O)	DUAL (D) Side Hooks & 2 Shelves (T)	TRIPLE (T) Side Hooks (H)	TRIPLE (T) Side Hooks & Shelf (O)	TRIPLE (T) Side Hooks & 2 Shelves (T)
42 / 1067	18 / 457	2202	2298	n/a	3036	3180	n/a
42 / 1067	24 / 610	2316	2412	n/a	3216	3360	n/a
51 / 1295	18 / 457	2384	2480	n/a	3306	3450	n/a
51 / 1295	24 / 610	2523	2619	n/a	3509	3653	n/a
57 / 1448	18 / 457	n/a	2602	2698	n/a	3631	3775
57 / 1448	24 / 610	n/a	2758	2854	n/a	3849	3993
66 / 1676	18 / 457	n/a	2784	2880	n/a	3902	4046
66 / 1676	24 / 610	n/a	2965	3061	n/a	4142	4286

SOLID WITH DIGITAL LOCK (U)

12" DOOR WIDTH

		DUAL (D) SIDE HOOKS (H)		DUAL (D) SIDE HOOKS & SHELF (O)		DUAL (D) SIDE HOOKS & 2 SHELVES (T)		TRIPLE (T) SIDE HOOKS (H)		TRIPLE (T) SIDE HOOKS & SHELF (O)		TRIPLE (T) SIDE HOOKS & 2 SHELVES (T)	
		Source Laminate	Foundation Laminate	Source Laminate	Foundation Laminate	Source Laminate	Foundation Laminate	Source Laminate	Foundation Laminate	Source Laminate	Foundation Laminate	Source Laminate	Foundation Laminate
42 / 1067	18 / 457	1876	2002	1972	2098	n/a	n/a	2544	2733	2688	2877	n/a	n/a
42 / 1067	24 / 610	1987	2113	2083	2209	n/a	n/a	2711	2900	2855	3044	n/a	n/a
51 / 1295	18 / 457	1981	2135	2077	2231	n/a	n/a	2700	2931	2844	3075	n/a	n/a
51 / 1295	24 / 610	2116	2270	2212	2366	n/a	n/a	2890	3121	3034	3265	n/a	n/a
57 / 1448	18 / 457	n/a	n/a	2148	2320	2244	2416	n/a	n/a	2948	3206	3092	3350
57 / 1448	24 / 610	n/a	n/a	2298	2470	2394	2566	n/a	n/a	3154	3412	3298	3556
66 / 1676	18 / 457	n/a	n/a	2254	2452	2350	2548	n/a	n/a	3104	3401	3248	3545
66 / 1676	24 / 610	n/a	n/a	2426	2624	2522	2720	n/a	n/a	3333	3630	3477	3774
		15" DOOR WIDTH											
42 / 1067	18 / 457	1954	2112	2050	2208	n/a	n/a	2664	2901	2808	3045	n/a	n/a
42 / 1067	24 / 610	2068	2226	2164	2322	n/a	n/a	2844	3081	2988	3225	n/a	n/a
51 / 1295	18 / 457	2068	2260	2164	2356	n/a	n/a	2832	3120	2976	3264	n/a	n/a
51 / 1295	24 / 610	2207	2399	2303	2495	n/a	n/a	3035	3323	3179	3467	n/a	n/a
57 / 1448	18 / 457	n/a	n/a	2240	2454	2336	2550	n/a	n/a	3088	3409	3232	3553
57 / 1448	24 / 610	n/a	n/a	2396	2610	2492	2706	n/a	n/a	3306	3627	3450	3771
66 / 1676	18 / 457	n/a	n/a	2354	2602	2450	2698	n/a	n/a	3257	3629	3401	3773
66 / 1676	24 / 610	n/a	n/a	2535	2783	2631	2879	n/a	n/a	3497	3869	3641	4013

J L F C 2
Locker – Two-High Cubby

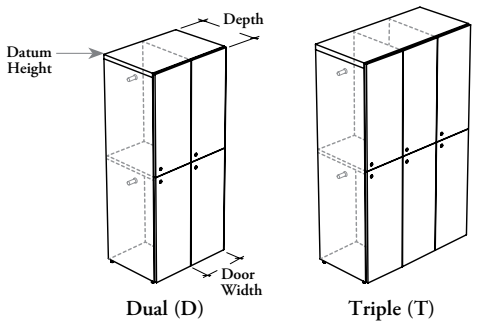

Dual (D) Triple (T)

This Two-High Cubby Locker provides enclosed storage for personal items. This freestanding unit is offered in dual or triple configurations, and can be ganged with other lockers to create a bank of lockers.

WHAT'S INCLUDED

1 case with levelers, 4 or 6 doors, digital numeric keypad locks or locks and keys (as specified), and accessories listed below:

Interior Config.	Side Hook	Adjust. Shelf
H	2	0 (42" to 66" h per section
N	0	0 (42" to 66" h) per section
S	0	1 (42" to 66" h) per section

WHAT'S EXCLUDED

Boot Tray, Locker Number and Digital Lock Key.

NOTES

When Front Style (M, N or O) is specified, only Metal Door Front Finish is available.

When Front Style (S, T or U) is specified, only Laminate Door Front Finish is available.

When Front Style (M, O, S or U) is specified, Pull Style and Pull Finish are **not** available.

When Front Style (M, N, S or T) is specified, only Key Style (K, N or R) is available.

When Front Style (O or U) is specified, only Key Style (A) is available.

The digital lock defaults to Versa Mini Basic 6th Generation, Keypad operation, Recess mount, Vertical orientation and finish in brushed nickel.

If the key are needed to operate the digital lock and set up different levels of access, specify JLKEE (Digital Lock Key).

Side Hooks come in Platinum finish only.

Shelf matches the Case Finish.

Refer to application guide.

PRODUCT OPTIONS

Front Style	Datum Height	Depth	Door Width	Configuration	Orientation	Identification
M Metal **N** Metal with Pull **O** Metal with Digital Lock **S** Solid (Shown) **T** Solid with Pull **U** Solid with Digital Lock	42, 51, 57, 66	18, 24	15, 18	**D** Dual **T** Triple	**L** Door Swing – Left **R** Door Swing – Right (Shown)	**N** No Identification (Shown) **R** Number Ready

SAMPLE ORDER CODE

JLFC2 S	42	18	15	D	R	N

PRODUCT OPTIONS CONTINUED

Interior Configuration	Door Front Finish	Edge Trim Finish (Laminate Front only)	Case Finish	Pull Style (for Front Style (N or T) only)	Pull Finish (for Front Style (N or T) only)	Key Style
H Side Hooks (Shown) **S** Shelf **N** No Accessory	**Metal Front:** (for metal front style) Foundation Mica Accent **Laminate Front:** (for solid front style) Source Laminate Foundation Laminate	Edge Trim Colors	Source Laminate	**C** Cityline Recessed	Foundation Mica Accent	**A** Digital Lock Assigned **K** Keyed Alike **R** Keyed Randomly **N** No Lock

SAMPLE ORDER CODE CONTINUED

H	3D	4D	3D			K

See Pricing on the following page.

JLFC2
Locker – Two-High Cubby (Continued)

DIMENSIONS INCHES / MM

PRICING

METAL (M)

15" DOOR WIDTH

H	D	DUAL (D) No Accessory (N)	DUAL (D) Side Hooks (H)	DUAL (D) Shelf (S)	TRIPLE (T) No Accessory (N)	TRIPLE (T) Side Hooks (H)	TRIPLE (T) Shelf (S)
42 / 1067	18 / 457	1785	1937	1977	2450	2678	2738
42 / 1067	24 / 610	1937	2089	2129	2657	2885	2945
51 / 1295	18 / 457	1993	2145	2185	2737	2965	3025
51 / 1295	24 / 610	2161	2313	2353	2965	3193	3253
57 / 1448	18 / 457	2130	2282	2322	2926	3154	3214
57 / 1448	24 / 610	2309	2461	2501	3168	3396	3456
66 / 1676	18 / 457	2333	2485	2525	3207	3435	3495
66 / 1676	24 / 610	2530	2682	2722	3470	3698	3758

18" DOOR WIDTH

42 / 1067	18 / 457	1941	2093	2133	2672	2900	2960
42 / 1067	24 / 610	2104	2256	2296	2896	3124	3184
51 / 1295	18 / 457	2167	2319	2359	2996	3224	3284
51 / 1295	24 / 610	2347	2499	2539	3240	3468	3528
57 / 1448	18 / 457	2320	2472	2512	n/a	n/a	n/a
57 / 1448	24 / 610	2510	2662	2702	n/a	n/a	n/a
66 / 1676	18 / 457	2546	2698	2738	n/a	n/a	n/a
66 / 1676	24 / 610	2753	2905	2945	n/a	n/a	n/a

SOLID (S)

15" DOOR WIDTH

		DUAL (D) NO ACCESSORY (N)		DUAL (D) SIDE HOOKS (H)		DUAL (D) SHELF (S)		TRIPLE (T) NO ACCESSORY (N)		TRIPLE (T) SIDE HOOKS (H)		TRIPLE (T) SHELF (S)	
		Source Laminate	Foundation Laminate	Source Laminate	Foundation Laminate	Source Laminate	Foundation Laminate	Source Laminate	Foundation Laminate	Source Laminate	Foundation Laminate	Source Laminate	Foundation Laminate
42 / 1067	18 / 457	1605	1921	1757	2073	1797	2113	2180	2654	2408	2882	2468	2942
42 / 1067	24 / 610	1757	2073	1909	2225	1949	2265	2387	2861	2615	3089	2675	3149
51 / 1295	18 / 457	1745	2129	1897	2281	1937	2321	2365	2941	2593	3169	2653	3229
51 / 1295	24 / 610	1913	2297	2065	2449	2105	2489	2593	3169	2821	3397	2881	3457
57 / 1448	18 / 457	1838	2266	1990	2418	2030	2458	2488	3130	2716	3358	2776	3418
57 / 1448	24 / 610	2017	2445	2169	2597	2209	2637	2730	3372	2958	3600	3018	3660
66 / 1676	18 / 457	1981	2477	2133	2629	2173	2669	2679	3423	2907	3651	2967	3711
66 / 1676	24 / 610	2178	2674	2330	2826	2370	2866	2942	3686	3170	3914	3230	3974

Pricing is continued on the following page.

J L F C 2

Locker – Two-High Cubby (Continued)

DIMENSIONS
INCHES / MM

PRICING

SOLID (S) (CONTINUED)

18" DOOR WIDTH

H	D	DUAL (D) NO ACCESSORY (N) Source Laminate	DUAL (D) NO ACCESSORY (N) Foundation Laminate	DUAL (D) SIDE HOOKS (H) Source Laminate	DUAL (D) SIDE HOOKS (H) Foundation Laminate	DUAL (D) SHELF (S) Source Laminate	DUAL (D) SHELF (S) Foundation Laminate	TRIPLE (T) NO ACCESSORY (N) Source Laminate	TRIPLE (T) NO ACCESSORY (N) Foundation Laminate	TRIPLE (T) SIDE HOOKS (H) Source Laminate	TRIPLE (T) SIDE HOOKS (H) Foundation Laminate	TRIPLE (T) SHELF (S) Source Laminate	TRIPLE (T) SHELF (S) Foundation Laminate
42 / 1067	18 / 457	1701	2081	1853	2233	1893	2273	2312	2882	2540	3110	2600	3170
42 / 1067	24 / 610	1864	2244	2016	2396	2056	2436	2536	3106	2764	3334	2824	3394
51 / 1295	18 / 457	1843	2303	1995	2455	2035	2495	2510	3200	2738	3428	2798	3488
51 / 1295	24 / 610	2023	2483	2175	2635	2215	2675	2754	3444	2982	3672	3042	3732
57 / 1448	18 / 457	1944	2460	2096	2612	2136	2652	n/a	n/a	n/a	n/a	n/a	n/a
57 / 1448	24 / 610	2134	2650	2286	2802	2326	2842	n/a	n/a	n/a	n/a	n/a	n/a
66 / 1676	18 / 457	2086	2682	2238	2834	2278	2874	n/a	n/a	n/a	n/a	n/a	n/a
66 / 1676	24 / 610	2293	2889	2445	3041	2485	3081	n/a	n/a	n/a	n/a	n/a	n/a

METAL WITH PULL (N)

15" DOOR WIDTH

		DUAL (D) No Acessory (H)	DUAL (D) Side Hooks (H)	DUAL (D) Shelf (S)	TRIPLE (T) No Acessory (H)	TRIPLE (T) Side Hooks (H)	TRIPLE (T) Shelf (S)
42 / 1067	18 / 457	2049	2201	2241	2846	3074	3134
42 / 1067	24 / 610	2201	2353	2393	3053	3281	3341
51 / 1295	18 / 457	2257	2409	2449	3133	3361	3421
51 / 1295	24 / 610	2425	2577	2617	3361	3589	3649
57 / 1448	18 / 457	2394	2546	2586	3322	3550	3610
57 / 1448	24 / 610	2573	2725	2765	3564	3792	3852
66 / 1676	18 / 457	2597	2749	2789	3603	3831	3891
66 / 1676	24 / 610	2794	2946	2986	3866	4094	4154

18" DOOR WIDTH

42 / 1067	18 / 457	2205	2357	2397	3068	3296	3356
42 / 1067	24 / 610	2368	2520	2560	3292	3520	3580
51 / 1295	18 / 457	2431	2583	2623	3392	3620	3680
51 / 1295	24 / 610	2611	2763	2803	3636	3864	3924
57 / 1448	18 / 457	2584	2736	2776	n/a	n/a	n/a
57 / 1448	24 / 610	2774	2926	2966	n/a	n/a	n/a
66 / 1676	18 / 457	2810	2962	3002	n/a	n/a	n/a
66 / 1676	24 / 610	3017	3169	3209	n/a	n/a	n/a

Pricing is continued on the following page.

JLFC2
Locker – Two-High Cubby (Continued)

DIMENSIONS INCHES / MM

PRICING

SOLID WITH PULL (T)

15" DOOR WIDTH

		DUAL (D)						TRIPLE (T)					
		NO ACCESSORY (N)		SIDE HOOKS (H)		SHELF (S)		NO ACCESSORY (N)		SIDE HOOKS (H)		SHELF (S)	
H	D	Source Laminate	Foundation Laminate	Source Laminate	Foundation Laminate	Source Laminate	Foundation Laminate	Source Laminate	Foundation Laminate	Source Laminate	Foundation Laminate	Source Laminate	Foundation Laminate
42 / 1067	18 / 457	1837	2153	1989	2305	2029	2345	2528	3002	2756	3230	2816	3290
42 / 1067	24 / 610	1989	2305	2141	2457	2181	2497	2735	3209	2963	3437	3023	3497
51 / 1295	18 / 457	1977	2361	2129	2513	2169	2553	2713	3289	2941	3517	3001	3577
51 / 1295	24 / 610	2145	2529	2297	2681	2337	2721	2941	3517	3169	3745	3229	3805
57 / 1448	18 / 457	2070	2498	2222	2650	2262	2690	2836	3478	3064	3706	3124	3766
57 / 1448	24 / 610	2249	2677	2401	2829	2441	2869	3078	3720	3306	3948	3366	4008
66 / 1676	18 / 457	2213	2709	2365	2861	2405	2901	3027	3771	3255	3999	3315	4059
66 / 1676	24 / 610	2410	2906	2562	3058	2602	3098	3290	4034	3518	4262	3578	4322

18" DOOR WIDTH

42 / 1067	18 / 457	1933	2313	2085	2465	2125	2505	2660	3230	2888	3458	2948	3518
42 / 1067	24 / 610	2096	2476	2248	2628	2288	2668	2884	3454	3112	3682	3172	3742
51 / 1295	18 / 457	2075	2535	2227	2687	2267	2727	2858	3548	3086	3776	3146	3836
51 / 1295	24 / 610	2255	2715	2407	2867	2447	2907	3102	3792	3330	4020	3390	4080
57 / 1448	18 / 457	2176	2692	2328	2844	2368	2884	n/a	n/a	n/a	n/a	n/a	n/a
57 / 1448	24 / 610	2366	2882	2518	3034	2558	3074	n/a	n/a	n/a	n/a	n/a	n/a
66 / 1676	18 / 457	2318	2914	2470	3066	2510	3106	n/a	n/a	n/a	n/a	n/a	n/a
66 / 1676	24 / 610	2525	3121	2677	3273	2717	3313	n/a	n/a	n/a	n/a	n/a	n/a

METAL WITH DIGITAL LOCK (O)

15" DOOR WIDTH

		DUAL (D)			TRIPLE (T)		
		No Acessory (H)	Side Hooks (H)	Shelf (S)	No Acessory (H)	Side Hooks (H)	Shelf (S)
42 / 1067	18 / 457	2709	2861	2901	3836	4064	4124
42 / 1067	24 / 610	2861	3013	3053	4043	4271	4331
51 / 1295	18 / 457	2917	3069	3109	4123	4351	4411
51 / 1295	24 / 610	3085	3237	3277	4351	4579	4639
57 / 1448	18 / 457	3054	3206	3246	4312	4540	4600
57 / 1448	24 / 610	3233	3385	3425	4554	4782	4842
66 / 1676	18 / 457	3257	3409	3449	4593	4821	4881
66 / 1676	24 / 610	3454	3606	3646	4856	5084	5144

Pricing is continued on the following page.

J L F C 2

Locker – Two-High Cubby (Continued)

DIMENSIONS
INCHES / MM

PRICING

METAL WITH DIGITAL LOCK (O) (CONTINUED)

18" DOOR WIDTH

H	D	DUAL (D) No Acessory (H)	DUAL (D) Side Hooks (H)	DUAL (D) Shelf (S)	TRIPLE (T) No Acessory (H)	TRIPLE (T) Side Hooks (H)	TRIPLE (T) Shelf (S)
42 / 1067	18 / 457	2865	3017	3057	4058	4286	4346
42 / 1067	24 / 610	3028	3180	3220	4282	4510	4570
51 / 1295	18 / 457	3091	3243	3283	4382	4610	4670
51 / 1295	24 / 610	3271	3423	3463	4626	4854	4914
57 / 1448	18 / 457	3244	3396	3436	n/a	n/a	n/a
57 / 1448	24 / 610	3434	3586	3626	n/a	n/a	n/a
66 / 1676	18 / 457	3470	3622	3662	n/a	n/a	n/a
66 / 1676	24 / 610	3677	3829	3869	n/a	n/a	n/a

SOLID WITH DIGITAL LOCK (U)

15" DOOR WIDTH

		DUAL (D) NO ACCESSORY (N)		DUAL (D) SIDE HOOKS (H)		DUAL (D) SHELF (S)		TRIPLE (T) NO ACCESSORY (N)		TRIPLE (T) SIDE HOOKS (H)		TRIPLE (T) SHELF (S)	
		Source Laminate	Foundation Laminate	Source Laminate	Foundation Laminate	Source Laminate	Foundation Laminate	Source Laminate	Foundation Laminate	Source Laminate	Foundation Laminate	Source Laminate	Foundation Laminate
42 / 1067	18 / 457	2529	2845	2681	2997	2721	3037	3566	4040	3794	4268	3854	4328
42 / 1067	24 / 610	2681	2997	2833	3149	2873	3189	3773	4247	4001	4475	4061	4535
51 / 1295	18 / 457	2669	3053	2821	3205	2861	3245	3751	4327	3979	4555	4039	4615
51 / 1295	24 / 610	2837	3221	2989	3373	3029	3413	3979	4555	4207	4783	4267	4843
57 / 1448	18 / 457	2762	3190	2914	3342	2954	3382	3874	4516	4102	4744	4162	4804
57 / 1448	24 / 610	2941	3369	3093	3521	3133	3561	4116	4758	4344	4986	4404	5046
66 / 1676	18 / 457	2905	3401	3057	3553	3097	3593	4065	4809	4293	5037	4353	5097
66 / 1676	24 / 610	3102	3598	3254	3750	3294	3790	4328	5072	4556	5300	4616	5360
		18" DOOR WIDTH											
42 / 1067	18 / 457	2625	3005	2777	3157	2817	3197	3698	4268	3926	4496	3986	4556
42 / 1067	24 / 610	2788	3168	2940	3320	2980	3360	3922	4492	4150	4720	4210	4780
51 / 1295	18 / 457	2767	3227	2919	3379	2959	3419	3896	4586	4124	4814	4184	4874
51 / 1295	24 / 610	2947	3407	3099	3559	3139	3599	4140	4830	4368	5058	4428	5118
57 / 1448	18 / 457	2868	3384	3020	3536	3060	3576	n/a	n/a	n/a	n/a	n/a	n/a
57 / 1448	24 / 610	3058	3574	3210	3726	3250	3766	n/a	n/a	n/a	n/a	n/a	n/a
66 / 1676	18 / 457	3010	3606	3162	3758	3202	3798	n/a	n/a	n/a	n/a	n/a	n/a
66 / 1676	24 / 610	3217	3813	3369	3965	3409	4005	n/a	n/a	n/a	n/a	n/a	n/a

J L F C 3
Locker – Three-High Cubby

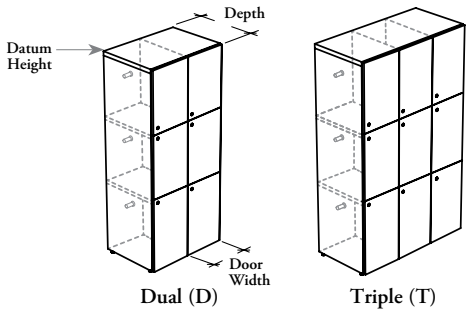

This Three-High Cubby Locker provides enclosed storage for personal items. This freestanding unit is offered in dual or triple configurations, and can be ganged with other lockers to create a bank of lockers.

WHAT'S INCLUDED

1 case with levelers, 6 or 9 doors, digital numeric keypad locks or locks and keys (as specified), and accessories listed below:

Interior Config.	Side Hook	Adjust. Shelf
H	2	0 (57" or 66" h) per section
N	0	0 (57" or 66" h) per section
S	0	1 (57" or 66" h) per section

WHAT'S EXCLUDED

Boot Tray, Locker Number and Digital Lock Key.

NOTES

When Front Style (M, N or O) is specified, only Metal Door Front Finish is available.

When Front Style (S, T or U) is specified, only Laminate Door Front Finish is available.

When Front Style (M, O, S or U) is specified, Pull Style and Pull Finish are **not** available.

When Front Style (M, N, S or T) is specified, only Key Style (K, N or R) is available.

When Front Style (O or U) is specified, only Key Style (A) is available.

The digital lock defaults to Versa Mini Basic 6th Generation, Keypad operation, Recess mount, Vertical orientation and finish in brushed nickel.

If the key are needed to operate the digital lock and set up different levels of access, specify JLKEE (Digital Lock Key).

Side Hooks come in Platinum finish only.

Shelf matches the Case Finish.

Refer to application guide.

PRODUCT OPTIONS

Front Style	Datum Height	Depth	Door Width	Configuration	Orientation	Identification
M Metal **N** Metal with Pull **O** Metal with Digital Lock **S** Solid (Shown) **T** Solid with Pull **U** Solid with Digital Lock	57, 66	18, 24	15, 18	**D** Dual **T** Triple	**L** Door Swing – Left **R** Door Swing – Right (Shown)	**N** No Identification (Shown) **R** Number Ready

SAMPLE ORDER CODE

JLFC3 S	57	18	15	D	R	N

PRODUCT OPTIONS CONTINUED

Interior Configuration	Door Front Finish	Edge Trim Finish (Laminate Front only)	Case Finish	Pull Style (for Front Style (N or T) only)	Pull Finish (for Front Style (N or T) only)	Key Style
H Side Hooks (Shown) **S** Shelf **N** No Accessory	**Metal Front:** (for metal front style) Foundation Mica Accent **Laminate Front:** (for solid front style) Source Laminate Foundation Laminate	Edge Trim Colors	Source Laminate	**C** Cityline Recessed	Foundation Mica Accent	**A** Digital Lock Assigned **K** Keyed Alike **R** Keyed Randomly **N** No Lock

SAMPLE ORDER CODE CONTINUED

H	3D	4D	3D			K

See Pricing on the following page.

JLFC3
Locker – Three-High Cubby (Continued)

DIMENSIONS INCHES / MM | **PRICING**

METAL (M)

15" DOOR WIDTH

H	D	DUAL (D) No Accessory (N)	DUAL (D) Side Hooks (H)	DUAL (D) Shelf (S)	TRIPLE (T) No Accessory (N)	TRIPLE (T) Side Hooks (H)	TRIPLE (T) Shelf (S)
57 / 1448	18 / 457	2508	2736	2796	3389	3731	3821
57 / 1448	24 / 610	2700	2928	2988	3649	3991	4081
66 / 1676	18 / 457	2690	2918	2978	3647	3989	4079
66 / 1676	24 / 610	2899	3127	3187	3930	4272	4362

18" DOOR WIDTH

57 / 1448	18 / 457	2701	2929	2989	n/a	n/a	n/a
57 / 1448	24 / 610	2907	3135	3195	n/a	n/a	n/a
66 / 1676	18 / 457	2911	3139	3199	n/a	n/a	n/a
66 / 1676	24 / 610	3135	3363	3423	n/a	n/a	n/a

SOLID (S)

15" DOOR WIDTH

		DUAL (D) NO ACCESSORY (N)		DUAL (D) SIDE HOOKS (H)		DUAL (D) SHELF (S)		TRIPLE (T) NO ACCESSORY (N)		TRIPLE (T) SIDE HOOKS (H)		TRIPLE (T) SHELF (S)	
		Source Laminate	Foundation Laminate	Source Laminate	Foundation Laminate	Source Laminate	Foundation Laminate	Source Laminate	Foundation Laminate	Source Laminate	Foundation Laminate	Source Laminate	Foundation Laminate
57 / 1448	18 / 457	2304	2946	2532	3174	2592	3234	3083	4046	3425	4388	3515	4478
57 / 1448	24 / 610	2496	3138	2724	3366	2784	3426	3343	4306	3685	4648	3775	4738
66 / 1676	18 / 457	2438	3182	2666	3410	2726	3470	3269	4385	3611	4727	3701	4817
66 / 1676	24 / 610	2647	3391	2875	3619	2935	3679	3552	4668	3894	5010	3984	5100

18" DOOR WIDTH

57 / 1448	18 / 457	2437	3211	2665	3439	2725	3499	n/a	n/a	n/a	n/a	n/a	n/a
57 / 1448	24 / 610	2643	3417	2871	3645	2931	3705	n/a	n/a	n/a	n/a	n/a	n/a
66 / 1676	18 / 457	2587	3481	2815	3709	2875	3769	n/a	n/a	n/a	n/a	n/a	n/a
66 / 1676	24 / 610	2811	3705	3039	3933	3099	3993	n/a	n/a	n/a	n/a	n/a	n/a

METAL WITH PULL (N)

15" DOOR WIDTH

H	D	DUAL (D) No Acessory (H)	DUAL (D) Side Hooks (H)	DUAL (D) Shelf (S)	TRIPLE (T) No Acessory (H)	TRIPLE (T) Side Hooks (H)	TRIPLE (T) Shelf (S)
57 / 1448	18 / 457	2904	3132	3192	3983	4325	4415
57 / 1448	24 / 610	3096	3324	3384	4243	4585	4675
66 / 1676	18 / 457	3086	3314	3374	4241	4583	4673
66 / 1676	24 / 610	3295	3523	3583	4524	4866	4956

Pricing is continued on the following page.

J L F C 3

Locker – Three-High Cubby (Continued)

DIMENSIONS
INCHES / MM

PRICING

METAL WITH PULL (N) (CONTINUED)

18" DOOR WIDTH

H	D	DUAL (D) No Acessory (H)	DUAL (D) Side Hooks (H)	DUAL (D) Shelf (S)	TRIPLE (T) No Acessory (H)	TRIPLE (T) Side Hooks (H)	TRIPLE (T) Shelf (S)
57 / 1448	18 / 457	3097	3325	3385	n/a	n/a	n/a
57 / 1448	24 / 610	3303	3531	3591	n/a	n/a	n/a
66 / 1676	18 / 457	3307	3535	3595	n/a	n/a	n/a
66 / 1676	24 / 610	3531	3759	3819	n/a	n/a	n/a

SOLID WITH PULL (T)

15" DOOR WIDTH

		DUAL (D) NO ACCESSORY (N)		DUAL (D) SIDE HOOKS (H)		DUAL (D) SHELF (S)		TRIPLE (T) NO ACCESSORY (N)		TRIPLE (T) SIDE HOOKS (H)		TRIPLE (T) SHELF (S)	
		Source Laminate	Foundation Laminate	Source Laminate	Foundation Laminate	Source Laminate	Foundation Laminate	Source Laminate	Foundation Laminate	Source Laminate	Foundation Laminate	Source Laminate	Foundation Laminate
57 / 1448	18 / 457	2652	3294	2880	3522	2940	3582	3605	4568	3947	4910	4037	5000
57 / 1448	24 / 610	2844	3486	3072	3714	3132	3774	3865	4828	4207	5170	4297	5260
66 / 1676	18 / 457	2786	3530	3014	3758	3074	3818	3791	4907	4133	5249	4223	5339
66 / 1676	24 / 610	2995	3739	3223	3967	3283	4027	4074	5190	4416	5532	4506	5622

18" DOOR WIDTH

57 / 1448	18 / 457	2785	3559	3013	3787	3073	3847	n/a	n/a	n/a	n/a	n/a	n/a
57 / 1448	24 / 610	2991	3765	3219	3993	3279	4053	n/a	n/a	n/a	n/a	n/a	n/a
66 / 1676	18 / 457	2935	3829	3163	4057	3223	4117	n/a	n/a	n/a	n/a	n/a	n/a
66 / 1676	24 / 610	3159	4053	3387	4281	3447	4341	n/a	n/a	n/a	n/a	n/a	n/a

METAL WITH DIGITAL LOCK (O)

15" DOOR WIDTH

H	D	DUAL (D) No Accessory (N)	DUAL (D) Side Hooks (H)	DUAL (D) Shelf (S)	TRIPLE (T) No Accessory (N)	TRIPLE (T) Side Hooks (H)	TRIPLE (T) Shelf (S)
57 / 1448	18 / 457	3894	4122	4182	5468	5810	5900
57 / 1448	24 / 610	4086	4314	4374	5728	6070	6160
66 / 1676	18 / 457	4076	4304	4364	5726	6068	6158
66 / 1676	24 / 610	4285	4513	4573	6009	6351	6441

18" DOOR WIDTH

57 / 1448	18 / 457	4087	4315	4375	n/a	n/a	n/a
57 / 1448	24 / 610	4293	4521	4581	n/a	n/a	n/a
66 / 1676	18 / 457	4297	4525	4585	n/a	n/a	n/a
66 / 1676	24 / 610	4521	4749	4809	n/a	n/a	n/a

Pricing is continued on the following page.

JLFC3
Locker – Three-High Cubby (Continued)

DIMENSIONS INCHES / MM | **PRICING**

SOLID WITH DIGITAL LOCK (U)

15" DOOR WIDTH

		DUAL (D)						TRIPLE (T)					
		NO ACCESSORY (N)		SIDE HOOKS (H)		SHELF (S)		NO ACCESSORY (N)		SIDE HOOKS (H)		SHELF (S)	
H	D	Source Laminate	Foundation Laminate	Source Laminate	Foundation Laminate	Source Laminate	Foundation Laminate	Source Laminate	Foundation Laminate	Source Laminate	Foundation Laminate	Source Laminate	Foundation Laminate
57 / 1448	18 / 457	3690	4332	3918	4560	3978	4620	5162	6125	5504	6467	5594	6557
57 / 1448	24 / 610	3882	4524	4110	4752	4170	4812	5422	6385	5764	6727	5854	6817
66 / 1676	18 / 457	3824	4568	4052	4796	4112	4856	5348	6464	5690	6806	5780	6896
66 / 1676	24 / 610	4033	4777	4261	5005	4321	5065	5631	6747	5973	7089	6063	7179

18" DOOR WIDTH

57 / 1448	18 / 457	3823	4597	4051	4825	4111	4885	n/a	n/a	n/a	n/a	n/a	n/a
57 / 1448	24 / 610	4029	4803	4257	5031	4317	5091	n/a	n/a	n/a	n/a	n/a	n/a
66 / 1676	18 / 457	3973	4867	4201	5095	4261	5155	n/a	n/a	n/a	n/a	n/a	n/a
66 / 1676	24 / 610	4197	5091	4425	5319	4485	5379	n/a	n/a	n/a	n/a	n/a	n/a

J L F F G
Locker – Full Glass Doors

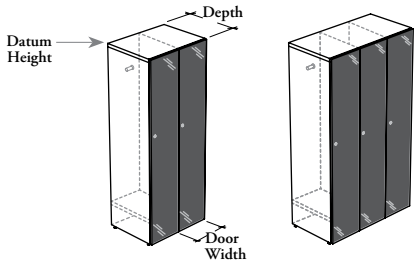

Dual (D) Triple (T)

This Locker with Full Glass Doors provides secured individual storage ideal for coat and personal items. This freestanding unit is offered in dual or triple configurations, and can be ganged with other lockers to create a bank of lockers.

WHAT'S INCLUDED
1 case with levelers, 2 or 3 doors, locks and keys (as specified), and accessories listed below:

Interior Config.	Side Hook	Adjust. Shelf
H	2	0 (42" or 51" h) per section
O	2	1 (42" to 66" h) per section
T	2	2 (57" or 66" h) per section

WHAT'S EXCLUDED
Boot Tray.

NOTES
Side Hooks come in Platinum finish only.

Shelf matches the Case Finish.

Refer to application guide.

PRODUCT OPTIONS

Datum Height	Depth	Door Width	Configuration	Orientation
42, 51, 57, 66	18, 24	12, 15	**D** Dual **T** Triple	**L** Door Swing – Left **R** Door Swing – Right (Shown)

SAMPLE ORDER CODE

JLFFG 42	18	12	D	R

PRODUCT OPTIONS CONTINUED

Interior Configuration	Door Frame Finish	Glass Door Finish	Case Finish	Key Style
H Side Hooks **O** Side Hooks & Shelf (Shown) **T** Side Hooks & 2 Shelves	Foundation Mica Accent	Back-Painted	Source Laminate	**K** Keyed Alike **R** Keyed Randomly **N** No Lock

SAMPLE ORDER CODE CONTINUED

H	83	K7	3D	K

See Pricing on the following page.

J L F F G
Locker – Full Glass Doors (Continued)

DIMENSIONS INCHES / MM		PRICING						KEY UPCHARGE
		12" DOOR WIDTH						
		DUAL (D)			TRIPLE (T)			
H	D	Side Hooks (H)	Side Hooks & Shelf (O)	Side Hooks & 2 Shelves (T)	Side Hooks (H)	Side Hooks & Shelf (O)	Side Hooks & 2 Shelves (T)	Keyed Alike or Keyed Randomly
42 / 1067	18 / 457	2186	2282	n/a	3009	3153	n/a	56
42 / 1067	24 / 610	2297	2393	n/a	3176	3320	n/a	56
51 / 1295	18 / 457	2389	2485	n/a	3312	3456	n/a	56
51 / 1295	24 / 610	2524	2620	n/a	3502	3646	n/a	56
57 / 1448	18 / 457	n/a	2612	2708	n/a	3644	3788	56
57 / 1448	24 / 610	n/a	2762	2858	n/a	3850	3994	56
66 / 1676	18 / 457	n/a	2728	2824	n/a	3815	3959	56
66 / 1676	24 / 610	n/a	2900	2996	n/a	4044	4188	56
		15" DOOR WIDTH						
42 / 1067	18 / 457	2300	2396	n/a	2750	2846	n/a	56
42 / 1067	24 / 610	2414	2510	n/a	2906	3002	n/a	56
51 / 1295	18 / 457	2514	2610	n/a	2870	2966	n/a	56
51 / 1295	24 / 610	2653	2749	n/a	3051	3147	n/a	56
57 / 1448	18 / 457	n/a	3183	3327	n/a	3853	3997	56
57 / 1448	24 / 610	n/a	3363	3507	n/a	4071	4215	56
66 / 1676	18 / 457	n/a	3501	3645	n/a	4031	4175	56
66 / 1676	24 / 610	n/a	3704	3848	n/a	4271	4415	56

J L F B 2
Open Locker – Two-High Cubby

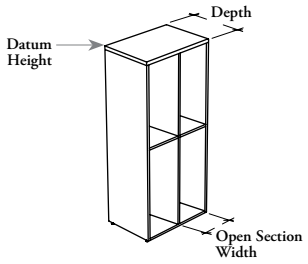

Dual (D)

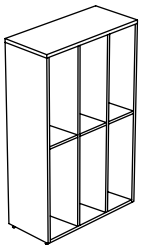
Triple (T)

This Two-High Open Cubby Locker provides open storage for display or to temporarily personal items. This freestanding unit is offered in dual or triple configurations, and can be ganged with other lockers to create a bank of lockers.

WHAT'S INCLUDED
1 case with levelers, 4 or 6 open sections and accessory listed below:

Interior Config.	Adjust. Shelf
S	1 (42" to 66" h) per section
N	0 (42" to 66" h) per section

WHAT'S EXCLUDED
Boot Tray.

NOTES
When No Accessory (N) option is specified, Adjustable Shelf Finish is **not** available.

Refer to application guide.

PRODUCT OPTIONS

Datum Height	Depth	Open Section Width	Configuration	Interior Configuration	Case Finish	Adjustable Shelf Finish
42, 51, 57, 66	18, 24	15, 18	**D** Dual **T** Triple	**N** No Accessory (Shown) **S** Shelf	Source Laminate	Source Laminate

SAMPLE ORDER CODE

JLFB2 42	18	15	D	N	3D	

DIMENSIONS INCHES / MM

PRICING

H	D	DUAL (D) No Accessory (N)	DUAL (D) Shelf (S)	TRIPLE (T) No Accessory (N)	TRIPLE (T) Shelf (S)
15" OPEN SECTION WIDTH					
42 / 1067	18 / 457	1101	1293	1424	1712
42 / 1067	24 / 610	1253	1445	1631	1919
51 / 1295	18 / 457	1193	1385	1537	1825
51 / 1295	24 / 610	1361	1553	1765	2053
57 / 1448	18 / 457	1254	1446	1612	1900
57 / 1448	24 / 610	1433	1625	1854	2142
66 / 1676	18 / 457	1345	1537	1725	2013
66 / 1676	24 / 610	1542	1734	1988	2276
18" OPEN SECTION WIDTH					
42 / 1067	18 / 457	1169	1361	1514	1802
42 / 1067	24 / 610	1332	1524	1738	2026
51 / 1295	18 / 457	1259	1451	1634	1922
51 / 1295	24 / 610	1439	1631	1878	2166
57 / 1448	18 / 457	1320	1512	n/a	n/a
57 / 1448	24 / 610	1510	1702	n/a	n/a
66 / 1676	18 / 457	1410	1602	n/a	n/a
66 / 1676	24 / 610	1617	1809	n/a	n/a

JLFB3
Open Locker – Three-High Cubby

This Three-High Open Cubby Locker provides open storage for display or to store temporarily personal items. This freestanding unit is offered in dual or triple configurations, and can be ganged with other lockers to create a bank of lockers.

WHAT'S INCLUDED
1 case with levelers, 6 or 9 open sections and no accessory (N).

WHAT'S EXCLUDED
Boot Tray.

NOTES
Refer to application guide.

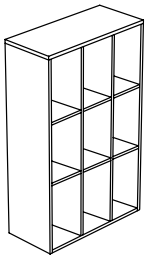

Triple (T)

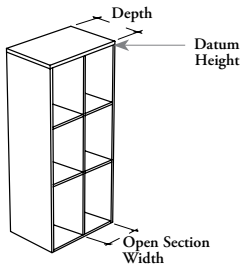

Dual (D)

PRODUCT OPTIONS

Datum Height	Depth	Open Sction Width	Configuration	Interior Configuration	Case Finish
57, 66	18, 24	15, 18	**D** Dual **T** Triple	**N** No Accessory (Shown)	Source Laminate

SAMPLE ORDER CODE

JLFB3 57	18	15	D	N	3D

DIMENSIONS INCHES / MM

H	D
57 / 1448	18 / 457
57 / 1448	24 / 610
66 / 1676	18 / 457
66 / 1676	24 / 610
57 / 1448	18 / 457
57 / 1448	24 / 610
66 / 1676	18 / 457
66 / 1676	24 / 610

PRICING

15" OPEN SECTION WIDTH	
DUAL (D)	TRIPLE (T)
No Accessory (N)	No Accessory (N)
1542	1940
1734	2200
1628	2054
1837	2337
18" OPEN SECTION WIDTH	
1621	n/a
1827	n/a
1711	n/a
1935	n/a

J L F S D
Common Locker – Full Doors

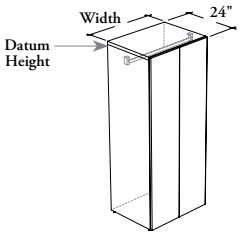

This Common Locker with Full Doors provides storage for coats to multiple users. This freestanding unit can be ganged with other lockers to create a bank of lockers.

WHAT'S INCLUDED
1 case with levelers, 2 doors and accessories listed below:

Interior Config.	Coat Rod	Adjust. Shelf
C	1	0 (51" to 66" h)
D	1	1 (66" h only)

WHAT'S EXCLUDED
Boot Tray and Common Locker Symbol.

NOTES
When Front Style (M or N) is specified, only Metal Door Front Finish is available.

When Front Style (S or T) is specified, only Laminate Door Front Finish is available.

When Front Style (M or S) is specified, Pull Style and Pull Finish are **not** available.

Coat Rod comes in Chrome finish only.

Shelf matches the Case Finish.

Refer to application guide.

PRODUCT OPTIONS

Front Style	Datum Height	Depth	Width	Identification
M Metal	51, 57, 66	24	24, 30, 36	**N** No Identification (Shown)
N Metal with Pull				**S** Symbol Ready
S Solid (Shown)				
T Solid with Pull				

SAMPLE ORDER CODE

JLFSD S	51	24	24	N

PRODUCT OPTIONS CONTINUED

Interior Configuration	Door Front Finish	Edge Trim Finish (Laminate Front only)	Case Finish	Pull Style (for Front Style (N or T) only)	Pull Finish (for Front Style (N or T) only)
C Coat Rod (Shown)	**Metal Front:** (for metal front style)	Edge Trim Colors	Source Laminate	**C** Cityline Recessed	Foundation
D Coat Rod & Shelf	Foundation				Mica
	Mica				Accent
	Accent				
	Laminate Front: (for solid front style)				
	Source Laminate				
	Foundation Laminate				

SAMPLE ORDER CODE CONTINUED

C	3D	4D	3D		

See Pricing on the following page.

J L F S D
Common Locker – Full Doors (Continued)

DIMENSIONS INCHES / MM

PRICING

H	D	W	METAL (M)		SOLID (S)			
					COAT ROD (C)		COAT ROD & SHELF (D)	
			Coat Rod (C)	Coat Rod & Shelf (D)	Source Laminate	Foundation Laminate	Source Laminate	Foundation Laminate
51 / 1295	24 / 610	24 / 610	1602	n/a	1362	1516	n/a	n/a
51 / 1295	24 / 610	30 / 762	1667	n/a	1427	1619	n/a	n/a
51 / 1295	24 / 610	36 / 914	1729	n/a	1489	1719	n/a	n/a
57 / 1448	24 / 610	24 / 610	1706	n/a	1432	1604	n/a	n/a
57 / 1448	24 / 610	30 / 762	1774	n/a	1500	1714	n/a	n/a
57 / 1448	24 / 610	36 / 914	1839	n/a	1565	1823	n/a	n/a
66 / 1676	24 / 610	24 / 610	1869	1921	1537	1735	1589	1787
66 / 1676	24 / 610	30 / 762	1941	2003	1609	1857	1671	1919
66 / 1676	24 / 610	36 / 914	2020	2092	1688	1986	1760	2058

			METAL WITH PULL (N)		SOLID WITH PULL (U)			
					COAT ROD (C)		COAT ROD & SHELF (D)	
			Coat Rod (C)	Coat Rod & Shelf (D)	Source Laminate	Foundation Laminate	Source Laminate	Foundation Laminate
51 / 1295	24 / 610	24 / 610	1734	n/a	1478	1632	n/a	n/a
51 / 1295	24 / 610	30 / 762	1799	n/a	1543	1735	n/a	n/a
51 / 1295	24 / 610	36 / 914	1861	n/a	1605	1835	n/a	n/a
57 / 1448	24 / 610	24 / 610	1838	n/a	1548	1720	n/a	n/a
57 / 1448	24 / 610	30 / 762	1906	n/a	1616	1830	n/a	n/a
57 / 1448	24 / 610	36 / 914	1971	n/a	1681	1939	n/a	n/a
66 / 1676	24 / 610	24 / 610	2001	2053	1653	1851	1705	1903
66 / 1676	24 / 610	30 / 762	2073	2135	1725	1973	1787	2035
66 / 1676	24 / 610	36 / 914	2152	2224	1804	2102	1876	2174

J L F S G
Common Locker – Full Glass Doors

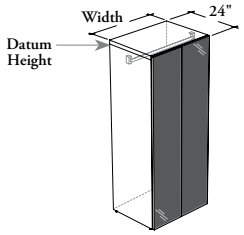

This Common Locker with Full Glass Doors provides storage for coats to multiple users. This freestanding unit can be ganged with other lockers to create a bank of lockers.

WHAT'S INCLUDED
1 case with levelers, 2 doors and accessories listed below:

Interior Config.	Coat Rod	Adjust. Shelf
C	1	0 (51" to 66" h)
D	1	1 (66" h only)

WHAT'S EXCLUDED
Boot Tray.

NOTES
Coat Rod comes in Chrome finish only.

Shelf matches the Case Finish.

Refer to application guide.

PRODUCT OPTIONS

Datum Height	Depth	Width	Interior Configuration	Door Frame Finish	Glass Door Finish	Case Finish
51, 57, 66	24	24, 30, 36	**C** Coat Rod (Shown) **D** Coat Rod & Shelf	Foundation Mica Accent	Back-Painted	Source Laminate

SAMPLE ORDER CODE

JLFSG 51	24	24	C	83	K7	3D

DIMENSIONS
INCHES / MM

PRICING

H	D	W	COAT ROD (C)	COAT ROD & SHELF (D)
51 / 1295	24 / 610	24 / 610	2232	n/a
51 / 1295	24 / 610	30 / 762	2297	n/a
51 / 1295	24 / 610	36 / 914	2359	n/a
57 / 1448	24 / 610	24 / 610	2354	n/a
57 / 1448	24 / 610	30 / 762	2422	n/a
57 / 1448	24 / 610	36 / 914	2487	n/a
66 / 1676	24 / 610	24 / 610	2473	2525
66 / 1676	24 / 610	30 / 762	2545	2607
66 / 1676	24 / 610	36 / 914	2624	2696

J L F R U
Recycling/Disposal Unit

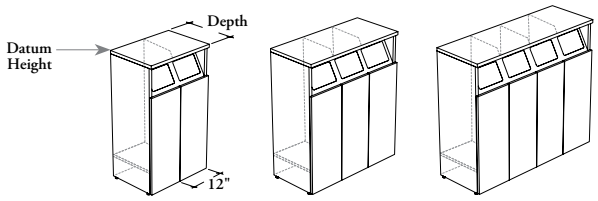

Dual (D) **Triple (T)** **Quadruple (Q)**

This freestanding unit provides centralized space for recycling/waste bins. It is offered in dual, triple or quadruple configurations, and can be ganged with other lockers to create a bank of lockers.

WHAT'S INCLUDED
1 unit with levelers, 1 metal opening fascia and accessories as listed below:

Configuration	Fixed Shelf	Recycling/Waste Bin
D	2	2
T	3	3
Q	4	4

WHAT'S EXCLUDED
Recycling/Disposal Unit Symbol.

NOTES
Each Recycling/Waste Bin allows 35 Liter capacity.

When Front Style (M) is specified, only Metal Door Front Finish is available.

When Front Style (S) is specified, only Laminate Door Front Finish is available.

PRODUCT OPTIONS

Front Style	Datum Height	Depth	Door Width	Configuration
M Metal	42	18, 24	12	**D** Dual
S Solid (Shown)				**T** Triple
				Q Quadruple

SAMPLE ORDER CODE

JLFRU S	42	18	12	D

PRODUCT OPTIONS CONTINUED

Identification	Opening Fascia Finish	Door Front Finish	Edge Trim Finish (Laminate Front only)	Case Finish
N No Identification (Shown)	Foundation	**Metal Front:** (for metal front style)	Edge Trim Colors	Source Laminate
S Symbol Ready	Mica	Foundation		
	Accent	Mica		
		Accent		
		Laminate Front: (for solid front style)		
		Source Laminate		
		Foundation Laminate		

SAMPLE ORDER CODE CONTINUED

N	68	3D	4D	3D

See Pricing on the following page.

JLFRU
Recycling/Disposal Unit (Continued)

DIMENSIONS INCHES / MM

PRICING

METAL (M)

12" DOOR WIDTH

H	W	Dual (D)	Triple (T)	Quadruple (Q)
42 / 1067	18 / 457	1923	2914	3905
42 / 1067	24 / 610	2077	3089	4100

SOLID (S)

12" DOOR WIDTH

		DUAL (D)		TRIPLE (T)		QUADRUPLE (Q)	
		Source Laminate	Foundation Laminate	Source Laminate	Foundation Laminate	Source Laminate	Foundation Laminate
42 / 1067	18 / 457	1849	1945	2803	2947	3757	3949
42 / 1067	24 / 610	2003	2099	2978	3122	3952	4144

J L F R S

Recycling/Disposal Unit with Storage

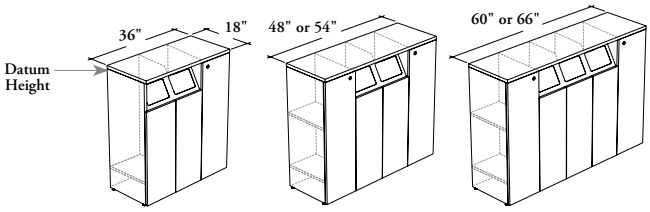

Left (L) or Right (R) Storage Position

Both Sides (B) Storage Position

This freestanding unit provides centralized space for recycling/waste bins and common storage. It can be ganged with other lockers to create a bank of lockers.

WHAT'S INCLUDED

1 unit with levelers, 1 metal opening fascia, locks and keys (as specified) and accessories as listed below:

Width	Fixed Shelf	Adjust. Shelf	Recycling/Waste Bin
36"	2	2	2
48" or 54"	3	4	2
60" or 66"	3	4	3

WHAT'S EXCLUDED

Recycling/Disposal Unit Symbol.

NOTES

Only storage section is lockable.

Each Recycling/Waste Bin allows 35 Liter capacity.

When Symbol Ready is specified, only Recycling/Waste Door Sections come with an identification.

When Front Style (M) is specified, only Metal Door Front Finish is available.

When Front Style (S) is specified, only Laminate Door Front Finish is available.

PRODUCT OPTIONS

Front Style	Datum Height	Depth	Width	Storage Position
M Metal	42	18	36, 48, 54, 60, 66	**B** Both Sides (Shown)
S Solid (Shown)				**L** Left
				R Right (Shown)

SAMPLE ORDER CODE

JLFRS S	42	18	36	L

PRODUCT OPTIONS CONTINUED

Identification	Opening Fascia Finish	Door Front Finish	Edge Trim Finish (Laminate Front only)	Case Finish	Storage Key Style
N No Identification (Shown)	Foundation	**Metal Front:** (for metal front style)	Edge Trim Colors	Source Laminate	**K** Keyed Alike
S Symbol Ready	Mica	Foundation			**R** Keyed Randomly
	Accent	Mica			**N** No Lock
		Accent			
		Laminate Front: (for solid front style)			
		Source Laminate			
		Foundation Laminate			

SAMPLE ORDER CODE CONTINUED

N	68	3D	4D	3D	N

See Pricing on the following page.

J L F R S
Recycling/Disposal Unit with Storage (Continued)

DIMENSIONS INCHES / MM

PRICING

H	D	W	METAL (M) LEFT (L) OR RIGHT (R)	METAL (M) BOTH SIDES (B)
42 / 1067	18 / 457	36 / 914	2970	n/a
42 / 1067	18 / 457	48 / 1219	n/a	3628
42 / 1067	18 / 457	54 / 1372	n/a	3784
42 / 1067	18 / 457	60 / 1524	n/a	4028
42 / 1067	18 / 457	66 / 1676	n/a	4142

			SOLID (S) LEFT (L) OR RIGHT (R)		SOLID (S) BOTH SIDES (B)	
			Source Laminate	Foundation Laminate	Source Laminate	Foundation Laminate
42 / 1067	18 / 457	36 / 914	2803	2962	n/a	n/a
42 / 1067	18 / 457	48 / 1219	n/a	n/a	3368	3590
42 / 1067	18 / 457	54 / 1372	n/a	n/a	3462	3716
42 / 1067	18 / 457	60 / 1524	n/a	n/a	3645	3915
42 / 1067	18 / 457	66 / 1676	n/a	n/a	3783	4085

J L E F D
Elevated Locker – Full Doors

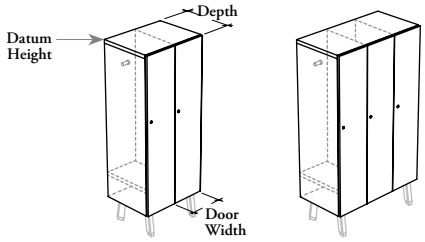

Dual (D) Triple (T)

This Elevated Locker with Full Doors provides secured individual storage ideal for coat and personal items. This freestanding unit is offered in dual or triple configurations, and can be ganged with other lockers to create a bank of lockers. It must be used with Angled Foot Kit (JLEFK), specified separately.

WHAT'S INCLUDED

1 case, 2 or 3 doors, digital numeric keypad locks or locks and keys (as specified), and accessories listed below:

Interior Config.	Side Hook	Adjust. Shelf
H	2	0 (42" to 57" h) per section
O	2	1 (51" to 66" h) per section
T	2	2 (66" h only) per section

WHAT'S EXCLUDED

Angled Foot Kit for Elevated Lockers, Boot Tray, Locker Number and Digital Lock Key.

NOTES

When Front Style (M, N or O) is specified, only Metal Door Front Finish is available.

When Front Style (S, T or U) is specified, only Laminate Door Front Finish is available.

When Front Style (M, O, S or U) is specified, Pull Style and Pull Finish are **not** available.

When Front Style (M, N, S or T) is specified, only Key Style (K, N or R) is available.

When Front Style (O or U) is specified, only Key Style (A) is available.

The digital lock defaults to Versa Mini Basic 6th Generation, Keypad operation, Recess mount, Vertical orientation and finish in brushed nickel.

If the key are needed to operate the digital lock and set up different levels of access, specify JLKEE (Digital Lock Key).

Side Hooks comes in Platinum finish only.

Shelf(ves) match(es) the Case Finish.

Refer to application guide.

PRODUCT OPTIONS

Front Style	Datum Height	Depth	Door Width	Configuration	Orientation	Identification
M Metal **N** Metal with Pull **O** Metal with Digital Lock **S** Solid (Shown) **T** Solid with Pull **U** Solid with Digital Lock	42, 51, 57, 66	18, 24	12, 15	**D** Dual **T** Triple	**L** Door Swing – Left **R** Door Swing – Right (Shown)	**N** No Identification (Shown) **R** Number Ready

SAMPLE ORDER CODE

JLEFD S	42	18	12	D	R	N

PRODUCT OPTIONS CONTINUED

Interior Configuration	Door Front Finish	Edge Trim Finish (Laminate Front only)	Case Finish	Pull Style (for Front Style (N or T) only)	Pull Finish (for Front Style (N or T) only)	Key Style
H Side Hooks **O** Side Hooks & Shelf (Shown) **T** Side Hooks & 2 Shelves	**Metal Front:** (for metal front style) Foundation Mica Accent **Laminate Front:** (for solid front style) Source Laminate Foundation Laminate	Edge Trim Colors	Source Laminate	**C** Cityline Recessed	Foundation Mica Accent	**A** Digital Lock Assigned **K** Keyed Alike **R** Keyed Randomly **N** No Lock

SAMPLE ORDER CODE CONTINUED

H	3D	4D	3D			K

See Pricing on the following page.

J L E F D
Elevated Locker – Full Doors (Continued)

DIMENSIONS INCHES / MM | **PRICING**

METAL (M)

12" DOOR WIDTH

H	D	DUAL (D) Side Hooks (H)	DUAL (D) Side Hooks & Shelf (O)	DUAL (D) Side Hooks & 2 Shelves (T)	TRIPLE (T) Side Hooks (H)	TRIPLE (T) Side Hooks & Shelf (O)	TRIPLE (T) Side Hooks & 2 Shelves (T)
42 / 1067	18 / 457	1367	n/a	n/a	1801	n/a	n/a
42 / 1067	24 / 610	1475	n/a	n/a	1948	n/a	n/a
51 / 1295	18 / 457	1527	1623	n/a	2038	2182	n/a
51 / 1295	24 / 610	1658	1754	n/a	2208	2352	n/a
57 / 1448	18 / 457	1636	1732	n/a	2199	2343	n/a
57 / 1448	24 / 610	1782	1878	n/a	2385	2529	n/a
66 / 1676	18 / 457	n/a	1901	1997	n/a	2573	2717
66 / 1676	24 / 610	n/a	2064	2160	n/a	2779	2923

15" DOOR WIDTH

42 / 1067	18 / 457	1482	n/a	n/a	1984	n/a	n/a
42 / 1067	24 / 610	1587	n/a	n/a	2138	n/a	n/a
51 / 1295	18 / 457	1664	1760	n/a	2254	2398	n/a
51 / 1295	24 / 610	1794	1890	n/a	2431	2575	n/a
57 / 1448	18 / 457	1786	1882	n/a	2436	2580	n/a
57 / 1448	24 / 610	1932	2028	n/a	2627	2771	n/a
66 / 1676	18 / 457	n/a	2069	2165	n/a	2844	2988
66 / 1676	24 / 610	n/a	2231	2327	n/a	3056	3200

SOLID (S)

12" DOOR WIDTH

		DUAL (D) SIDE HOOKS (H)		DUAL (D) SIDE HOOKS & SHELF (O)		DUAL (D) SIDE HOOKS & 2 SHELVES (T)		TRIPLE (T) SIDE HOOKS (H)		TRIPLE (T) SIDE HOOKS & SHELF (O)		TRIPLE (T) SIDE HOOKS & 2 SHELVES (T)	
		Source Laminate	Foundation Laminate	Source Laminate	Foundation Laminate	Source Laminate	Foundation Laminate	Source Laminate	Foundation Laminate	Source Laminate	Foundation Laminate	Source Laminate	Foundation Laminate
42 / 1067	18 / 457	1293	1389	n/a	n/a	n/a	n/a	1690	1834	n/a	n/a	n/a	n/a
42 / 1067	24 / 610	1401	1497	n/a	n/a	n/a	n/a	1837	1981	n/a	n/a	n/a	n/a
51 / 1295	18 / 457	1399	1523	1495	1619	n/a	n/a	1846	2032	1990	2176	n/a	n/a
51 / 1295	24 / 610	1530	1654	1626	1750	n/a	n/a	2016	2202	2160	2346	n/a	n/a
57 / 1448	18 / 457	1470	1612	1566	1708	n/a	n/a	1950	2163	2094	2307	n/a	n/a
57 / 1448	24 / 610	1616	1758	1712	1854	n/a	n/a	2136	2349	2280	2493	n/a	n/a
66 / 1676	18 / 457	n/a	n/a	1681	1849	1777	1945	n/a	n/a	2243	2495	2387	2639
66 / 1676	24 / 610	n/a	n/a	1844	2012	1940	2108	n/a	n/a	2449	2701	2593	2845

Pricing is continued on the following page.

J L E F D

Elevated Locker – Full Doors (Continued)

DIMENSIONS
INCHES / MM

PRICING

SOLID (S) (CONTINUED)

15" DOOR WIDTH

H	D	DUAL (D) SIDE HOOKS (H) Source Laminate	DUAL (D) SIDE HOOKS (H) Foundation Laminate	DUAL (D) SIDE HOOKS & SHELF (O) Source Laminate	DUAL (D) SIDE HOOKS & SHELF (O) Foundation Laminate	DUAL (D) SIDE HOOKS & 2 SHELVES (T) Source Laminate	DUAL (D) SIDE HOOKS & 2 SHELVES (T) Foundation Laminate	TRIPLE (T) SIDE HOOKS (H) Source Laminate	TRIPLE (T) SIDE HOOKS (H) Foundation Laminate	TRIPLE (T) SIDE HOOKS & SHELF (O) Source Laminate	TRIPLE (T) SIDE HOOKS & SHELF (O) Foundation Laminate	TRIPLE (T) SIDE HOOKS & 2 SHELVES (T) Source Laminate	TRIPLE (T) SIDE HOOKS & 2 SHELVES (T) Foundation Laminate
42 / 1067	18 / 457	1358	1478	n/a	n/a	n/a	n/a	1798	1978	n/a	n/a	n/a	n/a
42 / 1067	24 / 610	1463	1583	n/a	n/a	n/a	n/a	1952	2132	n/a	n/a	n/a	n/a
51 / 1295	18 / 457	1472	1626	1568	1722	n/a	n/a	1966	2197	2110	2341	n/a	n/a
51 / 1295	24 / 610	1602	1756	1698	1852	n/a	n/a	2143	2374	2287	2518	n/a	n/a
57 / 1448	18 / 457	1548	1726	1644	1822	n/a	n/a	2079	2346	2223	2490	n/a	n/a
57 / 1448	24 / 610	1694	1872	1790	1968	n/a	n/a	2270	2537	2414	2681	n/a	n/a
66 / 1676	18 / 457	n/a	n/a	1765	1975	1861	2071	n/a	n/a	2388	2703	2532	2847
66 / 1676	24 / 610	n/a	n/a	1927	2137	2023	2233	n/a	n/a	2600	2915	2744	3059

METAL WITH PULL (N)

12" DOOR WIDTH

H	D	DUAL (D) Side Hooks (H)	DUAL (D) Side Hooks & Shelf (O)	DUAL (D) Side Hooks & 2 Shelves (T)	TRIPLE (T) Side Hooks (H)	TRIPLE (T) Side Hooks & Shelf (O)	TRIPLE (T) Side Hooks & 2 Shelves (T)
42 / 1067	18 / 457	1499	n/a	n/a	1999	n/a	n/a
42 / 1067	24 / 610	1607	n/a	n/a	2146	n/a	n/a
51 / 1295	18 / 457	1659	1755	n/a	2236	2380	n/a
51 / 1295	24 / 610	1790	1886	n/a	2406	2550	n/a
57 / 1448	18 / 457	1768	1864	n/a	2397	2541	n/a
57 / 1448	24 / 610	1914	2010	n/a	2583	2727	n/a
66 / 1676	18 / 457	n/a	2033	2129	n/a	2771	2915
66 / 1676	24 / 610	n/a	2196	2292	n/a	2977	3121

15" DOOR WIDTH

42 / 1067	18 / 457	1614	n/a	n/a	2182	n/a	n/a
42 / 1067	24 / 610	1719	n/a	n/a	2336	n/a	n/a
51 / 1295	18 / 457	1796	1892	n/a	2452	2596	n/a
51 / 1295	24 / 610	1926	2022	n/a	2629	2773	n/a
57 / 1448	18 / 457	1918	2014	n/a	2634	2778	n/a
57 / 1448	24 / 610	2064	2160	n/a	2825	2969	n/a
66 / 1676	18 / 457	n/a	2201	2297	n/a	3042	3186
66 / 1676	24 / 610	n/a	2363	2459	n/a	3254	3398

Pricing is continued on the following page.

J L E F D
Elevated Locker – Full Doors (Continued)

DIMENSIONS INCHES / MM | **PRICING**

SOLID WITH PULL (T)

12" DOOR WIDTH

H	D	DUAL (D) SIDE HOOKS (H) Source Laminate	DUAL (D) SIDE HOOKS (H) Foundation Laminate	DUAL (D) SIDE HOOKS & SHELF (O) Source Laminate	DUAL (D) SIDE HOOKS & SHELF (O) Foundation Laminate	DUAL (D) SIDE HOOKS & 2 SHELVES (T) Source Laminate	DUAL (D) SIDE HOOKS & 2 SHELVES (T) Foundation Laminate	TRIPLE (T) SIDE HOOKS (H) Source Laminate	TRIPLE (T) SIDE HOOKS (H) Foundation Laminate	TRIPLE (T) SIDE HOOKS & SHELF (O) Source Laminate	TRIPLE (T) SIDE HOOKS & SHELF (O) Foundation Laminate	TRIPLE (T) SIDE HOOKS & 2 SHELVES (T) Source Laminate	TRIPLE (T) SIDE HOOKS & 2 SHELVES (T) Foundation Laminate
42 / 1067	18 / 457	1409	1505	n/a	n/a	n/a	n/a	1864	2008	n/a	n/a	n/a	n/a
42 / 1067	24 / 610	1517	1613	n/a	n/a	n/a	n/a	2011	2155	n/a	n/a	n/a	n/a
51 / 1295	18 / 457	1515	1639	1611	1735	n/a	n/a	2020	2206	2164	2350	n/a	n/a
51 / 1295	24 / 610	1646	1770	1742	1866	n/a	n/a	2190	2376	2334	2520	n/a	n/a
57 / 1448	18 / 457	1586	1728	1682	1824	n/a	n/a	2124	2337	2268	2481	n/a	n/a
57 / 1448	24 / 610	1732	1874	1828	1970	n/a	n/a	2310	2523	2454	2667	n/a	n/a
66 / 1676	18 / 457	n/a	n/a	1797	1965	1893	2061	n/a	n/a	2417	2669	2561	2813
66 / 1676	24 / 610	n/a	n/a	1960	2128	2056	2224	n/a	n/a	2623	2875	2767	2875

15" DOOR WIDTH

42 / 1067	18 / 457	1474	1594	n/a	n/a	n/a	n/a	1972	2152	n/a	n/a	n/a	n/a
42 / 1067	24 / 610	1579	1699	n/a	n/a	n/a	n/a	2126	2306	n/a	n/a	n/a	n/a
51 / 1295	18 / 457	1588	1742	1684	1838	n/a	n/a	2140	2371	2284	2515	n/a	n/a
51 / 1295	24 / 610	1718	1872	1814	1968	n/a	n/a	2317	2548	2461	2692	n/a	n/a
57 / 1448	18 / 457	1664	1842	1760	1938	n/a	n/a	2253	2520	2397	2664	n/a	n/a
57 / 1448	24 / 610	1810	1988	1906	2084	n/a	n/a	2444	2711	2588	2855	n/a	n/a
66 / 1676	18 / 457	n/a	n/a	1881	2091	1977	2187	n/a	n/a	2562	2877	2706	3021
66 / 1676	24 / 610	n/a	n/a	2043	2253	2139	2349	n/a	n/a	2774	3089	2918	3233

METAL WITH DIGITAL LOCK (O)

12" DOOR WIDTH

H	D	DUAL (D) Side Hooks (H)	DUAL (D) Side Hooks & Shelf (O)	DUAL (D) Side Hooks & 2 Shelves (T)	TRIPLE (T) Side Hooks (H)	TRIPLE (T) Side Hooks & Shelf (O)	TRIPLE (T) Side Hooks & 2 Shelves (T)
42 / 1067	18 / 457	1829	n/a	n/a	2494	n/a	n/a
42 / 1067	24 / 610	1937	n/a	n/a	2641	n/a	n/a
51 / 1295	18 / 457	1989	2085	n/a	2731	2875	n/a
51 / 1295	24 / 610	2120	2216	n/a	2901	3045	n/a
57 / 1448	18 / 457	2098	2194	n/a	2892	3036	n/a
57 / 1448	24 / 610	2244	2340	n/a	3078	3222	n/a
66 / 1676	18 / 457	n/a	2363	2459	n/a	3266	3410
66 / 1676	24 / 610	n/a	2526	2622	n/a	3472	3616

Pricing is continued on the following page.

J L E F D

Elevated Locker – Full Doors (Continued)

DIMENSIONS
INCHES / MM

PRICING

METAL WITH DIGITAL LOCK (O) (CONTINUED)

15" DOOR WIDTH

H	D	DUAL (D) Side Hooks (H)	DUAL (D) Side Hooks & Shelf (O)	DUAL (D) Side Hooks & 2 Shelves (T)	TRIPLE (T) Side Hooks (H)	TRIPLE (T) Side Hooks & Shelf (O)	TRIPLE (T) Side Hooks & 2 Shelves (T)
42 / 1067	18 / 457	1944	n/a	n/a	2677	n/a	n/a
42 / 1067	24 / 610	2049	n/a	n/a	2831	n/a	n/a
51 / 1295	18 / 457	2126	2222	n/a	2947	3091	n/a
51 / 1295	24 / 610	2256	2352	n/a	3124	3268	n/a
57 / 1448	18 / 457	2248	2344	n/a	3129	3273	n/a
57 / 1448	24 / 610	2394	2490	n/a	3320	3464	n/a
66 / 1676	18 / 457	n/a	2531	2627	n/a	3537	3681
66 / 1676	24 / 610	n/a	2693	2789	n/a	3749	3893

SOLID WITH DIGITAL LOCK (U)

12" DOOR WIDTH

		DUAL (D) SIDE HOOKS (H)		DUAL (D) SIDE HOOKS & SHELF (O)		DUAL (D) SIDE HOOKS & 2 SHELVES (T)		TRIPLE (T) SIDE HOOKS (H)		TRIPLE (T) SIDE HOOKS & SHELF (O)		TRIPLE (T) SIDE HOOKS & 2 SHELVES (T)	
		Source Laminate	Foundation Laminate	Source Laminate	Foundation Laminate	Source Laminate	Foundation Laminate	Source Laminate	Foundation Laminate	Source Laminate	Foundation Laminate	Source Laminate	Foundation Laminate
42 / 1067	18 / 457	1755	1851	n/a	n/a	n/a	n/a	2383	2527	n/a	n/a	n/a	n/a
42 / 1067	24 / 610	1863	1959	n/a	n/a	n/a	n/a	2530	2674	n/a	n/a	n/a	n/a
51 / 1295	18 / 457	1861	1985	1957	2081	n/a	n/a	2539	2725	2683	2869	n/a	n/a
51 / 1295	24 / 610	1992	2116	2088	2212	n/a	n/a	2709	2895	2853	3039	n/a	n/a
57 / 1448	18 / 457	1932	2074	2028	2170	n/a	n/a	2643	2856	2787	3000	n/a	n/a
57 / 1448	24 / 610	2078	2220	2174	2316	n/a	n/a	2829	3042	2973	3186	n/a	n/a
66 / 1676	18 / 457	n/a	n/a	2143	2311	2239	2407	n/a	n/a	2936	3188	3080	3332
66 / 1676	24 / 610	n/a	n/a	2306	2474	2402	2570	n/a	n/a	3142	3394	3286	3538

15" DOOR WIDTH

42 / 1067	18 / 457	1820	1940	n/a	n/a	n/a	n/a	2491	2671	n/a	n/a	n/a	n/a
42 / 1067	24 / 610	1925	2045	n/a	n/a	n/a	n/a	2645	2825	n/a	n/a	n/a	n/a
51 / 1295	18 / 457	1934	2088	2030	2184	n/a	n/a	2659	2890	2803	3034	n/a	n/a
51 / 1295	24 / 610	2064	2218	2160	2314	n/a	n/a	2836	3067	2980	3211	n/a	n/a
57 / 1448	18 / 457	2010	2188	2106	2284	n/a	n/a	2772	3039	2916	3183	n/a	n/a
57 / 1448	24 / 610	2156	2334	2252	2430	n/a	n/a	2963	3230	3107	3374	n/a	n/a
66 / 1676	18 / 457	n/a	n/a	2227	2437	2323	2533	n/a	n/a	3081	3396	3225	6621
66 / 1676	24 / 610	n/a	n/a	2389	2599	2485	2695	n/a	n/a	3293	3608	3437	7045

J L E C 2
Elevated Locker – Two-High Cubby

This Elevated Two-High Cubby Locker provides storage for personal items. This freestanding unit is offered in dual or triple configurations, and can be ganged with other lockers to create a bank of lockers. It must be used with Angled Foot Kit (JLEFK), specified separately.

WHAT'S INCLUDED

1 case, 4 or 6 doors, digital numeric keypad locks or locks and keys (as specified), and accessories listed below:

Interior Config.	Side Hook	Adjust. Shelf
H	2	0 (51" to 66" h) per section
N	0	0 (42" to 66" h) per section
S	0	1 (51" to 66" h) per section

WHAT'S EXCLUDED

Angled Foot Kit for Elevated Locker, Boot Tray, Locker Number and Digital Lock Key.

NOTES

When Front Style (M, N or O) is specified, only Metal Door Front Finish is available.

When Front Style (S, T or U) is specified, only Laminate Door Front Finish is available.

When Front Style (M, O, S or U) is specified, Pull Style and Pull Finish are **not** available.

When Front Style (M, N, S or T) is specified, only Key Style (K, N or R) is available.

When Front Style (O or U) is specified, only Key Style (A) is available.

The digital lock defaults to Versa Mini Basic 6th Generation, Keypad operation, Recess mount, Vertical orientation and finish in brushed nickel.

If the key are needed to operate the digital lock and set up different levels of access, specify JLKEE (Digital Lock Key).

Side Hooks come in Platinum finish only.

Shelf matches the Case Finish.

Refer to application guide.

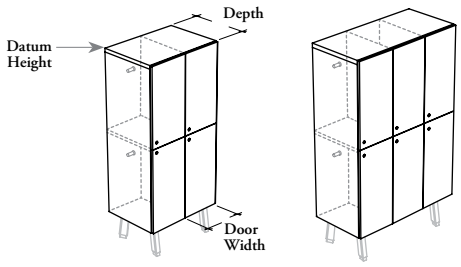

Dual (D) Triple (T)

PRODUCT OPTIONS

Front Style	Datum Height	Depth	Door Width	Configuration	Orientation	Identification
M Metal **N** Metal with Pull **O** Metal with Digital Lock **S** Solid (Shown) **T** Solid with Pull **U** Solid with Digital Lock	42, 51, 57, 66	18, 24	15, 18	**D** Dual **T** Triple	**L** Door Swing – Left **R** Door Swing – Right (Shown)	**N** No Identification (Shown) **R** Number Ready

SAMPLE ORDER CODE

JLEC2 S	42	18	15	D	R	N

PRODUCT OPTIONS CONTINUED

Interior Configuration	Door Front Finish	Edge Trim Finish (Laminate Front only)	Case Finish	Pull Style (for Front Style (N or T) only)	Pull Finish (for Front Style (N or T) only)	Key Style
H Side Hooks (Shown) **S** Shelf **N** No Accessory	**Metal Front:** (for metal front style) Foundation Mica Accent **Laminate Front:** (for solid front style) Source Laminate Foundation Laminate	Edge Trim Colors	Source Laminate	**C** Cityline Recessed	Foundation Mica Accent	**A** Digital Lock Assigned **K** Keyed Alike **R** Keyed Randomly **N** No Lock

SAMPLE ORDER CODE CONTINUED

N	3D	4D	3D			K

See Pricing on the following page.

JLEC2
Elevated Locker – Two-High Cubby (Continued)

DIMENSIONS INCHES / MM | **PRICING**

METAL (M)

15" DOOR WIDTH

H	D	DUAL (D) No Accessory (N)	DUAL (D) Side Hooks (H)	DUAL (D) Shelf (S)	TRIPLE (T) No Accessory (N)	TRIPLE (T) Side Hooks (H)	TRIPLE (T) Shelf (S)
42 / 1067	18 / 457	1509	n/a	n/a	2052	n/a	n/a
42 / 1067	24 / 610	1629	n/a	n/a	2214	n/a	n/a
51 / 1295	18 / 457	1713	1865	1905	2333	2561	2621
51 / 1295	24 / 610	1849	2001	2041	2516	2744	2804
57 / 1448	18 / 457	1850	2002	2042	2522	2750	2810
57 / 1448	24 / 610	1997	2149	2189	2719	2947	3007
66 / 1676	18 / 457	2057	2209	2249	2809	3037	3097
66 / 1676	24 / 610	2222	2374	2414	3027	3255	3315

18" DOOR WIDTH

42 / 1067	18 / 457	1624	n/a	n/a	2225	n/a	n/a
42 / 1067	24 / 610	1755	n/a	n/a	2405	n/a	n/a
51 / 1295	18 / 457	1851	2003	2043	2548	2776	2836
51 / 1295	24 / 610	1998	2150	2190	2749	2977	3037
57 / 1448	18 / 457	2003	2155	2195	n/a	n/a	n/a
57 / 1448	24 / 610	2161	2313	2353	n/a	n/a	n/a
66 / 1676	18 / 457	2230	2382	2422	n/a	n/a	n/a
66 / 1676	24 / 610	2404	2556	2596	n/a	n/a	n/a

SOLID (S)

15" DOOR WIDTH

		DUAL (D) NO ACCESSORY (H)		DUAL (D) SIDE HOOKS (H)		DUAL (D) SHELF (S)		TRIPLE (T) NO ACCESSORY (H)		TRIPLE (T) SIDE HOOKS (H)		TRIPLE (T) SHELF (S)	
		Source Laminate	Foundation Laminate	Source Laminate	Foundation Laminate	Source Laminate	Foundation Laminate	Source Laminate	Foundation Laminate	Source Laminate	Foundation Laminate	Source Laminate	Foundation Laminate
42 / 1067	18 / 457	1385	1625	n/a	n/a	n/a	n/a	1866	2226	n/a	n/a	n/a	n/a
42 / 1067	24 / 610	1505	1745	n/a	n/a	n/a	n/a	2028	2388	n/a	n/a	n/a	n/a
51 / 1295	18 / 457	1529	1837	1681	1989	1721	2029	2057	2519	2285	2747	2345	2807
51 / 1295	24 / 610	1665	1973	1817	2125	1857	2165	2240	2702	2468	2930	2528	2990
57 / 1448	18 / 457	1622	1978	1774	2130	1814	2170	2180	2714	2408	2942	2468	3002
57 / 1448	24 / 610	1769	2125	1921	2277	1961	2317	2377	2911	2605	3139	2665	3199
66 / 1676	18 / 457	1765	2185	1917	2337	1957	2377	2371	3001	2599	3229	2659	3289
66 / 1676	24 / 610	1930	2350	2082	2502	2122	2542	2589	3219	2817	3447	2877	3507

Pricing is continued on the following page.

J L E C 2

Elevated Locker – Two-High Cubby (Continued)

DIMENSIONS
INCHES / MM

PRICING

SOLID (S) (CONTINUED)

18" DOOR WIDTH

H	D	DUAL (D) NO ACCESSORY (H) Source Laminate	DUAL (D) NO ACCESSORY (H) Foundation Laminate	DUAL (D) SIDE HOOKS (H) Source Laminate	DUAL (D) SIDE HOOKS (H) Foundation Laminate	DUAL (D) SHELF (S) Source Laminate	DUAL (D) SHELF (S) Foundation Laminate	TRIPLE (T) NO ACCESSORY (H) Source Laminate	TRIPLE (T) NO ACCESSORY (H) Foundation Laminate	TRIPLE (T) SIDE HOOKS (H) Source Laminate	TRIPLE (T) SIDE HOOKS (H) Foundation Laminate	TRIPLE (T) SHELF (S) Source Laminate	TRIPLE (T) SHELF (S) Foundation Laminate
42 / 1067	18 / 457	1468	1756	n/a	n/a	n/a	n/a	1991	2423	n/a	n/a	n/a	n/a
42 / 1067	24 / 610	1599	1887	n/a	n/a	n/a	n/a	2171	2603	n/a	n/a	n/a	n/a
51 / 1295	18 / 457	1611	1983	1763	2135	1803	2175	2188	2746	2416	2974	2476	3034
51 / 1295	24 / 610	1758	2130	1910	2282	1950	2322	2389	2947	2617	3175	2677	3235
57 / 1448	18 / 457	1711	2135	1863	2287	1903	2327	n/a	n/a	n/a	n/a	n/a	n/a
57 / 1448	24 / 610	1869	2293	2021	2445	2061	2485	n/a	n/a	n/a	n/a	n/a	n/a
66 / 1676	18 / 457	1854	2358	2006	2510	2046	2550	n/a	n/a	n/a	n/a	n/a	n/a
66 / 1676	24 / 610	2028	2532	2180	2684	2220	2724	n/a	n/a	n/a	n/a	n/a	n/a

METAL WITH PULL (N)

15" DOOR WIDTH

H	D	DUAL (D) No Acessory (H)	DUAL (D) Side Hooks (H)	DUAL (D) Shelf (S)	TRIPLE (T) No Acessory (H)	TRIPLE (T) Side Hooks (H)	TRIPLE (T) Shelf (S)
42 / 1067	18 / 457	1773	n/a	n/a	2448	n/a	n/a
42 / 1067	24 / 610	1893	n/a	n/a	2610	n/a	n/a
51 / 1295	18 / 457	1977	2129	2169	2729	2957	3017
51 / 1295	24 / 610	2113	2265	2305	2912	3140	3200
57 / 1448	18 / 457	2114	2266	2306	2918	3146	3206
57 / 1448	24 / 610	2261	2413	2453	3115	3343	3403
66 / 1676	18 / 457	2321	2473	2513	3205	3433	3493
66 / 1676	24 / 610	2486	2638	2678	3423	3651	3711

18" DOOR WIDTH

42 / 1067	18 / 457	1888	n/a	n/a	2621	n/a	n/a
42 / 1067	24 / 610	2019	n/a	n/a	2801	n/a	n/a
51 / 1295	18 / 457	2115	2267	2307	2944	3172	3232
51 / 1295	24 / 610	2262	2414	2454	3145	3373	3433
57 / 1448	18 / 457	2267	2419	2459	n/a	n/a	n/a
57 / 1448	24 / 610	2425	2577	2617	n/a	n/a	n/a
66 / 1676	18 / 457	2494	2646	2686	n/a	n/a	n/a
66 / 1676	24 / 610	2668	2820	2860	n/a	n/a	n/a

Pricing is continued on the following page.

J L E C 2
Elevated Locker – Two-High Cubby (Continued)

DIMENSIONS INCHES / MM | **PRICING**

SOLID WITH PULL (T)

15" DOOR WIDTH

DIMENSIONS H	DIMENSIONS D	DUAL (D) NO ACCESSORY (H) Source Laminate	DUAL (D) NO ACCESSORY (H) Foundation Laminate	DUAL (D) SIDE HOOKS (H) Source Laminate	DUAL (D) SIDE HOOKS (H) Foundation Laminate	DUAL (D) SHELF (S) Source Laminate	DUAL (D) SHELF (S) Foundation Laminate	TRIPLE (T) NO ACCESSORY (H) Source Laminate	TRIPLE (T) NO ACCESSORY (H) Foundation Laminate	TRIPLE (T) SIDE HOOKS (H) Source Laminate	TRIPLE (T) SIDE HOOKS (H) Foundation Laminate	TRIPLE (T) SHELF (S) Source Laminate	TRIPLE (T) SHELF (S) Foundation Laminate
42 / 1067	18 / 457	1617	1857	n/a	n/a	n/a	n/a	2214	2574	n/a	n/a	n/a	n/a
42 / 1067	24 / 610	1737	1977	n/a	n/a	n/a	n/a	2376	2736	n/a	n/a	n/a	n/a
51 / 1295	18 / 457	1761	2069	1913	2221	1953	2261	2405	2867	2633	3095	2693	3155
51 / 1295	24 / 610	1897	2205	2049	2357	2089	2397	2588	3050	2816	3278	2876	3338
57 / 1448	18 / 457	1854	2210	2006	2362	2046	2402	2528	3062	2756	3290	2816	3350
57 / 1448	24 / 610	2001	2357	2153	2509	2193	2549	2725	3259	2953	3487	3013	3547
66 / 1676	18 / 457	1997	2417	2149	2569	2189	2609	2719	3349	2947	3577	3007	3637
66 / 1676	24 / 610	2162	2582	2314	2734	2354	2774	2937	3567	3165	3795	3225	3855

18" DOOR WIDTH

42 / 1067	18 / 457	1700	1988	n/a	n/a	n/a	n/a	2339	2771	n/a	n/a	n/a	n/a
42 / 1067	24 / 610	1831	2119	n/a	n/a	n/a	n/a	2519	2951	n/a	n/a	n/a	n/a
51 / 1295	18 / 457	1843	2215	1995	2367	2035	2407	2536	3094	2764	3322	2824	3382
51 / 1295	24 / 610	1990	2362	2142	2514	2182	2554	2737	3295	2965	3523	3025	3583
57 / 1448	18 / 457	1943	2367	2095	2519	2135	2559	n/a	n/a	n/a	n/a	n/a	n/a
57 / 1448	24 / 610	2101	2525	2253	2677	2293	2717	n/a	n/a	n/a	n/a	n/a	n/a
66 / 1676	18 / 457	2086	2590	2238	2742	2278	2782	n/a	n/a	n/a	n/a	n/a	n/a
66 / 1676	24 / 610	2260	2764	2412	2916	2452	2956	n/a	n/a	n/a	n/a	n/a	n/a

METAL WITH DIGITAL LOCK (O)

15" DOOR WIDTH

DIMENSIONS H	DIMENSIONS D	DUAL (D) No Acessory (H)	DUAL (D) Side Hooks (H)	DUAL (D) Shelf (S)	TRIPLE (T) No Acessory (H)	TRIPLE (T) Side Hooks (H)	TRIPLE (T) Shelf (S)
42 / 1067	18 / 457	2433	n/a	n/a	3438	n/a	n/a
42 / 1067	24 / 610	2553	n/a	n/a	3600	n/a	n/a
51 / 1295	18 / 457	2637	2789	2829	3719	3947	4007
51 / 1295	24 / 610	2773	2925	2965	3902	4130	4190
57 / 1448	18 / 457	2774	2926	2966	3908	4136	4196
57 / 1448	24 / 610	2921	3073	3113	4105	4333	4393
66 / 1676	18 / 457	2981	3133	3173	4195	4423	4483
66 / 1676	24 / 610	3146	3298	3338	4413	4641	4701

Pricing is continued on the following page.

J L E C 2

Elevated Locker – Two-High Cubby (Continued)

DIMENSIONS
INCHES / MM

PRICING

METAL WITH DIGITAL LOCK (O) (CONTINUED)

18" DOOR WIDTH

H	D	DUAL (D) No Acessory (H)	DUAL (D) Side Hooks (H)	DUAL (D) Shelf (S)	TRIPLE (T) No Acessory (H)	TRIPLE (T) Side Hooks (H)	TRIPLE (T) Shelf (S)
42 / 1067	18 / 457	2548	n/a	n/a	3611	n/a	n/a
42 / 1067	24 / 610	2679	n/a	n/a	3791	n/a	n/a
51 / 1295	18 / 457	2775	2927	2967	3934	4162	4222
51 / 1295	24 / 610	2922	3074	3114	4135	4363	4423
57 / 1448	18 / 457	2927	3079	3119	n/a	n/a	n/a
57 / 1448	24 / 610	3085	3237	3277	n/a	n/a	n/a
66 / 1676	18 / 457	3154	3306	3346	n/a	n/a	n/a
66 / 1676	24 / 610	3328	3480	3520	n/a	n/a	n/a

SOLID WITH DIGITAL LOCK (U)

15" DOOR WIDTH

		DUAL (D) NO ACCESSORY (H)		DUAL (D) SIDE HOOKS (H)		DUAL (D) SHELF (S)		TRIPLE (T) NO ACCESSORY (H)		TRIPLE (T) SIDE HOOKS (H)		TRIPLE (T) SHELF (S)	
		Source Laminate	Foundation Laminate	Source Laminate	Foundation Laminate	Source Laminate	Foundation Laminate	Source Laminate	Foundation Laminate	Source Laminate	Foundation Laminate	Source Laminate	Foundation Laminate
42 / 1067	18 / 457	2309	2549	n/a	n/a	n/a	n/a	3252	3612	n/a	n/a	n/a	n/a
42 / 1067	24 / 610	2429	2669	n/a	n/a	n/a	n/a	3414	3774	n/a	n/a	n/a	n/a
51 / 1295	18 / 457	2453	2761	2605	2913	2645	2953	3443	3905	3671	4133	3731	4193
51 / 1295	24 / 610	2589	2897	2741	3049	2781	3089	3626	4088	3854	4316	3914	4376
57 / 1448	18 / 457	2546	2902	2698	3054	2738	3094	3566	4100	3794	4328	3854	4388
57 / 1448	24 / 610	2693	3049	2845	3201	2885	3241	3763	4297	3991	4525	4051	4585
66 / 1676	18 / 457	2689	3109	2841	3261	2881	3301	3757	4387	3985	4615	4045	4675
66 / 1676	24 / 610	2854	3274	3006	3426	3046	3466	3975	4605	4203	4833	4263	4893

18" DOOR WIDTH

42 / 1067	18 / 457	2392	2680	n/a	n/a	n/a	n/a	3377	3809	n/a	n/a	n/a	n/a
42 / 1067	24 / 610	2523	2811	n/a	n/a	n/a	n/a	3557	3989	n/a	n/a	n/a	n/a
51 / 1295	18 / 457	2535	2907	2687	3059	2727	3099	3574	4132	3802	4360	3862	4420
51 / 1295	24 / 610	2682	3054	2834	3206	2874	3246	3775	4333	4003	4561	4063	4621
57 / 1448	18 / 457	2635	3059	2787	3211	2827	3251	n/a	n/a	n/a	n/a	n/a	n/a
57 / 1448	24 / 610	2793	3217	2945	3369	2985	3409	n/a	n/a	n/a	n/a	n/a	n/a
66 / 1676	18 / 457	2778	3282	2930	3434	2970	3474	n/a	n/a	n/a	n/a	n/a	n/a
66 / 1676	24 / 610	2952	3456	3104	3608	3144	3648	n/a	n/a	n/a	n/a	n/a	n/a

J L E C 3

Elevated Locker – Three-High Cubby

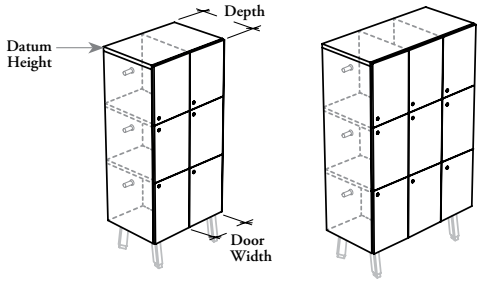

Dual (D) Triple (T)

This Elevated Three-High Cubby Locker provides storage for personal items. This freestanding unit is offered in dual or triple configurations, and can be ganged with other lockers to create a bank of lockers. It must be used with Angled Foot Kit (JLEFK), specified separately.

WHAT'S INCLUDED

1 case, 6 or 9 doors, digital numeric keypad locks or locks and keys (as specified), and accessories listed below:

Interior Config.	Side Hook	Adjust. Shelf
H	2	0 (66" h only) per section
N	0	0 (57" or 66" h) per section
S	0	1 (66" h only) per section

WHAT'S EXCLUDED

Angled Foot Kit for Elevated Locker, Boot Tray, Locker Number and Digital Lock Key.

NOTES

When Front Style (M, N or O) is specified, only Metal Door Front Finish is available.

When Front Style (S, T or U) is specified, only Laminate Door Front Finish is available.

When Front Style (M, O, S or U) is specified, Pull Style and Pull Finish are **not** available.

When Front Style (M, N, S or T) is specified, only Key Style (K, N or R) is available.

When Front Style (O or U) is specified, only Key Style (A) is available.

The digital lock defaults to Versa Mini Basic 6th Generation, Keypad operation, Recess mount, Vertical orientation and finish in brushed nickel.

If the key are needed to operate the digital lock and set up different levels of access, specify JLKEE (Digital Lock Key).

Side Hooks come in Platinum finish only.

Shelf matches the Case Finish.

Refer to application guide.

PRODUCT OPTIONS

Front Style	Datum Height	Depth	Door Width	Configuration	Orientation	Identification
M Metal **N** Metal with Pull **O** Metal with Digital Lock **S** Solid (Shown) **T** Solid with Pull **U** Solid with Digital Lock	57, 66	18, 24	15, 18	**D** Dual **T** Triple	**L** Door Swing – Left **R** Door Swing – Right (Shown)	**N** No Identification (Shown) **R** Number Ready

SAMPLE ORDER CODE

JLFC3 S	57	18	15	D	R	N

PRODUCT OPTIONS CONTINUED

Interior Configuration	Door Front Finish	Edge Trim Finish (Laminate Front only)	Case Finish	Pull Style (for Front Style (N or T) only)	Pull Finish (for Front Style (N or T) only)	Key Style
H Side Hooks (Shown) **S** Shelf **N** No Accessory	**Metal Front:** (for metal front style) Foundation Mica Accent **Laminate Front:** (for solid front style) Source Laminate Foundation Laminate	Edge Trim Colors	Source Laminate	**C** Cityline Recessed	Foundation Mica Accent	**A** Digital Lock Assigned **K** Keyed Alike **R** Keyed Randomly **N** No Lock

SAMPLE ORDER CODE CONTINUED

N	3D	4D	3D			K

See Pricing on the following page.

JLEC3
Elevated Locker – Three-High Cubby (Continued)

DIMENSIONS INCHES / MM | **PRICING**

METAL (M)

15" DOOR WIDTH

H	D	DUAL (D) No Accessory (N)	DUAL (D) Side Hooks (H)	DUAL (D) Shelf (S)	TRIPLE (T) No Accessory (N)	TRIPLE (T) Side Hooks (H)	TRIPLE (T) Shelf (S)
57 / 1448	18 / 457	2300	n/a	n/a	3090	n/a	n/a
57 / 1448	24 / 610	2471	n/a	n/a	3328	n/a	n/a
66 / 1676	18 / 457	2487	2715	2775	3358	3700	3790
66 / 1676	24 / 610	2676	2904	2964	3619	3961	4051

18" DOOR WIDTH

57 / 1448	18 / 457	2475	n/a	n/a	n/a	n/a	n/a
57 / 1448	24 / 610	2661	n/a	n/a	n/a	n/a	n/a
66 / 1676	18 / 457	2679	2907	2967	n/a	n/a	n/a
66 / 1676	24 / 610	2883	3111	3171	n/a	n/a	n/a

SOLID (S)

15" DOOR WIDTH

		DUAL (D) NO ACCESSORY (H)		DUAL (D) SIDE HOOKS (H)		DUAL (D) SHELF (S)		TRIPLE (T) NO ACCESSORY (H)		TRIPLE (T) SIDE HOOKS (H)		TRIPLE (T) SHELF (S)	
		Source Laminate	Foundation Laminate	Source Laminate	Foundation Laminate	Source Laminate	Foundation Laminate	Source Laminate	Foundation Laminate	Source Laminate	Foundation Laminate	Source Laminate	Foundation Laminate
57 / 1448	18 / 457	2162	2696	n/a	n/a	n/a	n/a	2883	3684	n/a	n/a	n/a	n/a
57 / 1448	24 / 610	2333	2867	n/a	n/a	n/a	n/a	3121	3922	n/a	n/a	n/a	n/a
66 / 1676	18 / 457	2295	2925	2523	3153	2583	3213	3070	4015	3412	4357	3502	4447
66 / 1676	24 / 610	2484	3114	2712	3342	2772	3402	3331	4276	3673	4618	3763	4708

18" DOOR WIDTH

57 / 1448	18 / 457	2283	2919	n/a	n/a	n/a	n/a	n/a	n/a	n/a	n/a	n/a	n/a
57 / 1448	24 / 610	2469	3105	n/a	n/a	n/a	n/a	n/a	n/a	n/a	n/a	n/a	n/a
66 / 1676	18 / 457	2427	3183	2655	3411	2715	3471	n/a	n/a	n/a	n/a	n/a	n/a
66 / 1676	24 / 610	2631	3387	2859	3615	2919	3675	n/a	n/a	n/a	n/a	n/a	n/a

METAL WITH PULL (N)

15" DOOR WIDTH

H	D	DUAL (D) No Acessory (H)	DUAL (D) Side Hooks (H)	DUAL (D) Shelf (S)	TRIPLE (T) No Acessory (H)	TRIPLE (T) Side Hooks (H)	TRIPLE (T) Shelf (S)
57 / 1448	18 / 457	2696	n/a	n/a	3684	n/a	n/a
57 / 1448	24 / 610	2867	n/a	n/a	3922	n/a	n/a
66 / 1676	18 / 457	2883	3111	3171	3952	4294	4384
66 / 1676	24 / 610	3072	3300	3360	4213	4555	4645

Pricing is continued on the following page.

J L F C 3

Locker – Three-High Cubby (Continued)

DIMENSIONS
INCHES / MM

PRICING

METAL WITH PULL (N) (CONTINUED)

18" DOOR WIDTH

		DUAL (D)			TRIPLE (T)		
		No Acessory (H)	Side Hooks (H)	Shelf (S)	No Acessory (H)	Side Hooks (H)	Shelf (S)
57 / 1448	18 / 457	2871	n/a	n/a	n/a	n/a	n/a
57 / 1448	24 / 610	3057	n/a	n/a	n/a	n/a	n/a
66 / 1676	18 / 457	3075	3363	3303	n/a	n/a	n/a
66 / 1676	24 / 610	3279	3567	3507	n/a	n/a	n/a

SOLID WITH PULL (T)

15" DOOR WIDTH

		DUAL (D)						TRIPLE (T)					
		NO ACCESSORY (H)		SIDE HOOKS (H)		SHELF (S)		NO ACCESSORY (H)		SIDE HOOKS (H)		SHELF (S)	
		Source Laminate	Foundation Laminate	Source Laminate	Foundation Laminate	Source Laminate	Foundation Laminate	Source Laminate	Foundation Laminate	Source Laminate	Foundation Laminate	Source Laminate	Foundation Laminate
57 / 1448	18 / 457	2510	3044	n/a	n/a	n/a	n/a	3405	4206	n/a	n/a	n/a	n/a
57 / 1448	24 / 610	2681	3215	n/a	n/a	n/a	n/a	3643	4444	n/a	n/a	n/a	n/a
66 / 1676	18 / 457	2643	3273	2871	3501	2931	3561	3592	4537	3934	4879	4024	4969
66 / 1676	24 / 610	2832	3462	3060	3690	3120	3750	3853	4798	4195	5140	4285	5230

18" DOOR WIDTH

57 / 1448	18 / 457	2631	3267	n/a	n/a	n/a	n/a	n/a	n/a	n/a	n/a	n/a	n/a
57 / 1448	24 / 610	2817	3453	n/a	n/a	n/a	n/a	n/a	n/a	n/a	n/a	n/a	n/a
66 / 1676	18 / 457	2775	3531	3003	3759	3063	3819	n/a	n/a	n/a	n/a	n/a	n/a
66 / 1676	24 / 610	2979	3735	3207	3963	3267	4023	n/a	n/a	n/a	n/a	n/a	n/a

METAL WITH DIGITAL LOCK (O)

15" DOOR WIDTH

		DUAL (D)			TRIPLE (T)		
		No Accessory (N)	Side Hooks (H)	Shelf (S)	No Accessory (N)	Side Hooks (H)	Shelf (S)
57 / 1448	18 / 457	3686	n/a	n/a	5169	n/a	n/a
57 / 1448	24 / 610	3857	n/a	n/a	5407	n/a	n/a
66 / 1676	18 / 457	3873	4101	4161	5437	5779	5869
66 / 1676	24 / 610	4062	4290	4350	5698	6040	6130

18" DOOR WIDTH

57 / 1448	18 / 457	3861	n/a	n/a	n/a	n/a	n/a
57 / 1448	24 / 610	4047	n/a	n/a	n/a	n/a	n/a
66 / 1676	18 / 457	4065	4293	4353	n/a	n/a	n/a
66 / 1676	24 / 610	4269	4497	4557	n/a	n/a	n/a

Pricing is continued on the following page.

JLFC3
Locker – Three-High Cubby (Continued)

DIMENSIONS INCHES / MM		PRICING											
		SOLID WITH DIGITAL LOCK (U)											
		15" DOOR WIDTH											
		DUAL (D)						TRIPLE (T)					
		NO ACCESSORY (H)		SIDE HOOKS (H)		SHELF (S)		NO ACCESSORY (H)		SIDE HOOKS (H)		SHELF (S)	
		Source Laminate	Foundation Laminate	Source Laminate	Foundation Laminate	Source Laminate	Foundation Laminate	Source Laminate	Foundation Laminate	Source Laminate	Foundation Laminate	Source Laminate	Foundation Laminate
57 / 1448	18 / 457	3548	4082	n/a	n/a	n/a	n/a	4962	5763	n/a	n/a	n/a	n/a
57 / 1448	24 / 610	3719	4253	n/a	n/a	n/a	n/a	5200	6001	n/a	n/a	n/a	n/a
66 / 1676	18 / 457	3681	4311	3909	4539	3969	4599	5149	6094	5491	6436	5581	6526
66 / 1676	24 / 610	3870	4500	4098	4728	4158	4788	5410	6355	5752	6697	5842	6787
		18" DOOR WIDTH											
57 / 1448	18 / 457	3669	4305	n/a	n/a	n/a	n/a	n/a	n/a	n/a	n/a	n/a	n/a
57 / 1448	24 / 610	3855	4491	n/a	n/a	n/a	n/a	n/a	n/a	n/a	n/a	n/a	n/a
66 / 1676	18 / 457	3813	4569	4041	4797	4101	4857	n/a	n/a	n/a	n/a	n/a	n/a
66 / 1676	24 / 610	4017	4773	4245	5001	4305	5061	n/a	n/a	n/a	n/a	n/a	n/a

J L E F G
Elevated Locker – Full Glass Doors

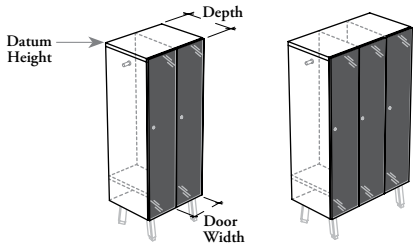

Dual (D) Triple (T)

This Elevated Locker with Full Glass Doors provides secured individual storage ideal for coat and personal items. This freestanding unit is offered in dual or triple configurations, and can be ganged with other lockers to create a bank of lockers. It must be used with Angled Foot Kit (JLEFK), specified separately.

WHAT'S INCLUDED
1 case, 2 or 3 doors, locks and keys (as specified), and accessories listed below:

Interior Config.	Side Hook	Adjust. Shelf
H	2	0 (42" to 57" h) per section
O	2	1 (51" to 66" h) per section
T	2	2 (66" h only) per section

WHAT'S EXCLUDED
Angled Foot Kit for Elevated Locker and Boot Tray.

NOTES
Side Hooks come in Platinum finish only.

Shelf(ves) match(es) the Case Finish.

Refer to application guide.

PRODUCT OPTIONS

Datum Height	Depth	Door Width	Configuration	Orientation
42, 51, 57, 66	18, 24	12, 15	**D** Dual **T** Triple	**L** Door Swing – Left **R** Door Swing – Right (Shown)

SAMPLE ORDER CODE

JLEFG 42	18	12	D	R

PRODUCT OPTIONS CONTINUED

Interior Configuration	Door Frame Finish	Glass Door Finish	Case Finish	Key Style
H Side Hooks **O** Side Hooks & Shelf (Shown) **T** Side Hooks & 2 Shelves	Foundation Mica Accent	Back-Painted	Source Laminate	**K** Keyed Alike **R** Keyed Randomly **N** No Lock

SAMPLE ORDER CODE CONTINUED

H	83	K7	3D	K

See Pricing on the following page.

J L E F G

Elevated Locker – Full Glass Doors (Continued)

DIMENSIONS INCHES / MM		PRICING						KEY UPCHARGE
		12" DOOR WIDTH						
		DUAL (D)			TRIPLE (T)			
H	D	Side Hooks (H)	Side Hooks & Shelf (O)	Side Hooks & 2 Shelves (T)	Side Hooks (H)	Side Hooks & Shelf (O)	Side Hooks & 2 Shelves (T)	Keyed Alike or Keyed Randomly
42 / 1067	18 / 457	1955	n/a	n/a	2683	n/a	n/a	56
42 / 1067	24 / 610	2063	n/a	n/a	2830	n/a	n/a	56
51 / 1295	18 / 457	2159	2255	n/a	2986	3130	n/a	56
51 / 1295	24 / 610	2290	2386	n/a	3156	3300	n/a	56
57 / 1448	18 / 457	2286	2382	n/a	3174	3318	n/a	56
57 / 1448	24 / 610	2432	2528	n/a	3360	3504	n/a	56
66 / 1676	18 / 457	n/a	2507	2603	n/a	3482	3626	56
66 / 1676	24 / 610	n/a	2670	2766	n/a	3688	3832	56
		15" DOOR WIDTH						
42 / 1067	18 / 457	2054	n/a	n/a	2842	n/a	n/a	56
42 / 1067	24 / 610	2159	n/a	n/a	2996	n/a	n/a	56
51 / 1295	18 / 457	2268	2364	n/a	3160	3304	n/a	56
51 / 1295	24 / 610	2398	2494	n/a	3337	3481	n/a	56
57 / 1448	18 / 457	2408	2504	n/a	3369	3513	n/a	56
57 / 1448	24 / 610	2554	2650	n/a	3560	3704	n/a	56
66 / 1676	18 / 457	n/a	2629	2725	n/a	3684	3828	56
66 / 1676	24 / 610	n/a	2791	2887	n/a	3896	4040	56

J L E B 2

Elevated Open Locker – Two-High Cubby

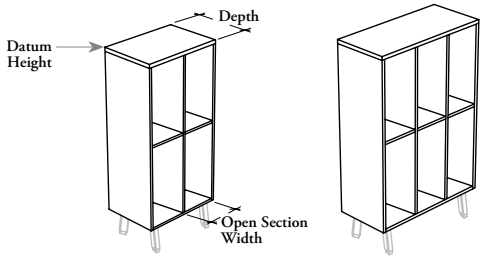

Dual (D) Triple (T)

This Elevated Two-High Open Cubby Locker provides open storage display or to store temporarily personal items. This freestanding unit is offered in dual or triple configurations, and can be ganged with other lockers to create a bank of lockers. It must be used with Angled Foot Kit (JLEFK), specified separately.

WHAT'S INCLUDED
1 case, 4 or 6 open sections and accessory listed below:

Interior Config.	Adjust. Shelf
S	1 (51" to 66" h) per section
N	0 (42" to 66" h) per section

WHAT'S EXCLUDED
Angled Foot Kit for Elevated Locker and Boot Tray.

NOTES
When No Accessory (N) option is specified, Adjustable Shelf Finish is **not** available.

Refer to application guide.

PRODUCT OPTIONS

Datum Height	Depth	Open Section Width	Configuration	Interior Configuration	Case Finish	Adjustable Shelf Finish
42, 51, 57, 66	18, 24	15, 18	**D** Dual **T** Triple	**N** No Accessory (Shown) **S** Shelf	Source Laminate	Source Laminate

SAMPLE ORDER CODE

JLEB2 51	18	15	T	S	3D	3D

DIMENSIONS INCHES / MM

PRICING

		15" OPEN SECTION WIDTH			
		DUAL (D)		TRIPLE (T)	
H	D	No Accessory (N)	Shelf (S)	No Accessory (N)	Shelf (S)
42 / 1067	18 / 457	949	n/a	1212	n/a
42 / 1067	24 / 610	1069	n/a	1374	n/a
51 / 1295	18 / 457	1041	1233	1325	1613
51 / 1295	24 / 610	1177	1369	1508	1796
57 / 1448	18 / 457	1102	1294	1400	1688
57 / 1448	24 / 610	1249	1441	1597	1885
66 / 1676	18 / 457	1193	1385	1513	1801
66 / 1676	24 / 610	1358	1550	1731	2019
		18" OPEN SECTION WIDTH			
42 / 1067	18 / 457	1004	n/a	1295	n/a
42 / 1067	24 / 610	1135	n/a	1475	n/a
51 / 1295	18 / 457	1095	1287	1414	1702
51 / 1295	24 / 610	1242	1434	1615	1903
57 / 1448	18 / 457	1155	1347	n/a	n/a
57 / 1448	24 / 610	1313	1505	n/a	n/a
66 / 1676	18 / 457	1246	1438	n/a	n/a
66 / 1676	24 / 610	1420	1612	n/a	n/a

JLEB3
Elevated Open Locker – Three-High Cubby

This Elevated Three-High Open Cubby Locker provides open storage for display or to store temporarily personal items. This freestanding unit is offered in dual or triple configurations, and can be ganged with other lockers to create a bank of lockers. It must be used with Angled Foot Kit (JLEFK), specified separately.

WHAT'S INCLUDED
1 case, 6 or 9 open sections and no accessory (N).

WHAT'S EXCLUDED
Angled Foot Kit for Elevated Locker and Boot Tray.

NOTES
Refer to application guide.

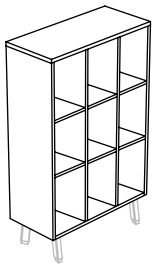

Triple (T)

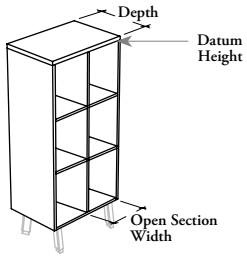

Dual (D)

PRODUCT OPTIONS

Datum Height	Depth	Open Section Width	Configuration	Interior Configuration	Case Finish
57, 66	18, 24	15, 18	**D** Dual **T** Triple	**N** No Accessory (Shown)	Source Laminate

SAMPLE ORDER CODE

JLEB3 57	18	15	D	N	3D

DIMENSIONS INCHES / MM

PRICING

H	D	15" OPEN SECTION WIDTH DUAL (D) No Accessory (N)	TRIPLE (T) No Accessory (N)
57 / 1448	18 / 457	1542	1940
57 / 1448	24 / 610	1734	2200
66 / 1676	18 / 457	1628	2054
66 / 1676	24 / 610	1837	2337
		18" OPEN SECTION WIDTH	
57 / 1448	18 / 457	1621	n/a
57 / 1448	24 / 610	1827	n/a
66 / 1676	18 / 457	1711	n/a
66 / 1676	24 / 610	1935	n/a

J L E S D

Elevated Common Locker – Full Doors

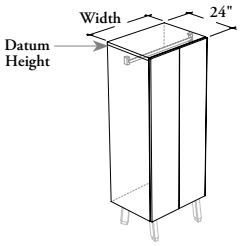

This Elevated Common Locker with Full Doors provides storage for coat to multiple users. This freestanding unit can be ganged with other lockers to create a bank of lockers. It must be used with Angled Foot Kit (JLEFK), specified separately.

WHAT'S INCLUDED
1 case, 2 doors and accessories listed below:

Interior Config.	Coat Rod
C	1

WHAT'S EXCLUDED
Angled Foot Kit for Elevated Locker, Boot Tray and Common Locker Symbol.

NOTES
When Front Style (M or N) is specified, only Metal Door Front Finish is available.

When Front Style (S or T) is specified, only Laminate Door Front Finish is available.

When Front Style (M or S) is specified, Pull Style and Pull Finish are **not** available.

Coat Rod comes in Chrome finish only.

Refer to application guide.

PRODUCT OPTIONS

Front Style	Datum Height	Depth	Width	Identification
M Metal	57, 66	24	24, 30, 36	**N** No Identification (Shown)
N Metal with Pull				**S** Symbol Ready
S Solid (Shown)				
T Solid with Pull				

SAMPLE ORDER CODE

JLESD S	57	24	24	N

PRODUCT OPTIONS CONTINUED

Interior Configuration	Door Front Finish	Edge Trim Finish (Laminate Front only)	Case Finish	Pull Style (for Front Style (N or T) only)	Pull Finish (for Front Style (N or T) only)
C Coat Rod (Shown)	**Metal Front:** (for metal front style)	Edge Trim Colors	Source Laminate	**C** Cityline Recessed	Foundation
	Foundation				Mica
	Mica				Accent
	Accent				
	Laminate Front: (for solid front style)				
	Source Laminate				
	Foundation Laminate				

SAMPLE ORDER CODE CONTINUED

C	3D	4D	3D		

See Pricing on the following page.

J L E S D

Elevated Common Locker – Full Doors (Continued)

DIMENSIONS INCHES / MM

PRICING

H	D	W	METAL (M) Coat Rod (C)	SOLID (S) COAT ROD (C) Source Laminate	SOLID (S) COAT ROD (C) Foundation Laminate
57 / 1448	24 / 610	24 / 610	1457	1325	1467
57 / 1448	24 / 610	30 / 762	1521	1389	1567
57 / 1448	24 / 610	36 / 914	1572	1440	1652
66 / 1676	24 / 610	24 / 610	1620	1430	1598
66 / 1676	24 / 610	30 / 762	1688	1498	1708
66 / 1676	24 / 610	36 / 914	1753	1563	1815

			METAL WITH PULL (N) Coat Rod (C)	SOLID WITH PULL (U) COAT ROD (C) Source Laminate	SOLID WITH PULL (U) COAT ROD (C) Foundation Laminate
57 / 1448	24 / 610	24 / 610	1589	1441	1583
57 / 1448	24 / 610	30 / 762	1653	1505	1683
57 / 1448	24 / 610	36 / 914	1704	1556	1768
66 / 1676	24 / 610	24 / 610	1752	1546	1714
66 / 1676	24 / 610	30 / 762	1820	1614	1824
66 / 1676	24 / 610	36 / 914	1885	1679	1931

J L E S G

Elevated Common Locker – Full Glass Doors

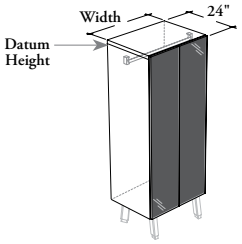

This Elevated Common Locker with Full Glass Doors provides storage for coat to multiple users. This freestanding unit can be ganged with other lockers to create a bank of lockers. It must be used with Angled Foot Kit (JLEFK), specified separately.

WHAT'S INCLUDED
1 case, 2 doors and accessories listed below:

Interior Config.	Coat Rod
C	1

WHAT'S EXCLUDED
Angled Foot Kit for Elevated Locker and Boot Tray.

NOTES
Coat Rod comes in Chrome finish only.

Refer to application guide.

PRODUCT OPTIONS

Datum Height	Depth	Width	Interior Configuration	Door Frame Finish	Glass Door Finish	Case Finish
57, 66	24	24, 30, 36	**C** Coat Rod (Shown)	Foundation Mica Accent	Back-Painted	Source Laminate

SAMPLE ORDER CODE

JLESG 57	24	24	C	83	K7	3D

DIMENSIONS
INCHES / MM

H	D	W
57 / 1448	24 / 610	24 / 610
57 / 1448	24 / 610	30 / 762
57 / 1448	24 / 610	36 / 914
66 / 1676	24 / 610	24 / 610
66 / 1676	24 / 610	30 / 762
66 / 1676	24 / 610	36 / 914

PRICING

COAT ROD (C)
2231
2295
2346
2350
2418
2483

JLERU
Elevated Recycling/Disposal Unit

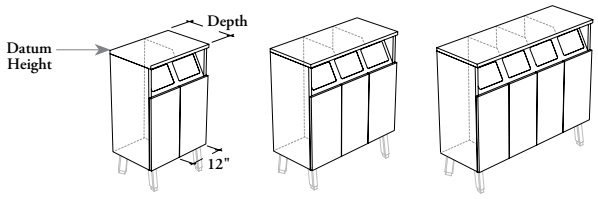

Dual (D) Triple (T) Quadruple (Q)

This elevated freestanding unit provides centralized space for recycling/waste bins. It is offered in dual, triple or quadruple configurations, and can be ganged with other lockers to create a bank of lockers. It must be used with Angled Foot Kit (JLEFK), specified separately.

WHAT'S INCLUDED
1 unit, 1 metal opening fascia and accessories as listed below:

Configuration	Fixed Shelf	Recycling/Waste Bin
D	2	2
T	3	3
Q	4	4

WHAT'S EXCLUDED
Angled Foot Kit for Elevated Locker and Recycling/Disposal Unit Symbol.

NOTES
Each Recycling/Waste Bin allows 35 Liter capacity.

When Front Style (M) is specified, only Metal Door Front Finish is available.

When Front Style (S) is specified, only Laminate Door Front Finish is available.

PRODUCT OPTIONS

Front Style	Datum Height	Depth	Door Width	Configuration
M Metal	42	18, 24	12	**D** Dual
S Solid (Shown)				**T** Triple
				Q Quadruple

SAMPLE ORDER CODE

JLERU S	42	18	12	D

PRODUCT OPTIONS CONTINUED

Identification	Opening Fascia Finish	Door Front Finish	Edge Trim Finish (Laminate Front only)	Case Finish
N No Identification (Shown)	Foundation	**Metal Front:** (for metal front style)	Edge Trim Colors	Source Laminate
S Symbol Ready	Mica	Foundation		
	Accent	Mica		
		Accent		
		Laminate Front: (for solid front style)		
		Source Laminate		
		Foundation Laminate		

SAMPLE ORDER CODE CONTINUED

N	68	3D	4D	3D

See Pricing on the following page.

JLERU
Elevated Recycling/Disposal Unit (Continued)

DIMENSIONS INCHES / MM

PRICING

METAL (M)

12" DOOR WIDTH

H	D	Dual (D)	Triple (T)	Quadruple (Q)
42 / 1067	18 / 457	1609	2674	3720
42 / 1067	24 / 610	1711	2813	3865

SOLID (S)

12" DOOR WIDTH

		DUAL (D)		TRIPLE (T)		QUADRUPLE (Q)	
		Source Laminate	Foundation Laminate	Source Laminate	Foundation Laminate	Source Laminate	Foundation Laminate
42 / 1067	18 / 457	1594	1660	2652	2751	3691	3823
42 / 1067	24 / 610	1696	1762	2791	2890	3836	3968

J L E F K
Angled Foot Kit for Elevated Locker

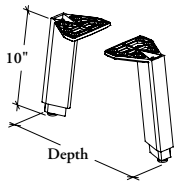

These Angled Foot mount to the underside of an Elevated Locker.

WHAT'S INCLUDED
2 angled foot with levelers, 2 leveler covers and attachment hardware.

WHAT'S EXCLUDED
Elevated Lockers.

NOTES
Can be used with:

- Elevated Lockers (JLEFD, JLEC2, JLEC3 or JLEFG)
- Elevated Open Lockers (JLEB2 or JLEB3)
- Elevated Common Lockers (JLESD or JLESG)
- Elevated Recycling/Disposal Unit (JLERU)

Refer to application guide.

PRODUCT OPTIONS

Height	Depth	Finish
10	18, 24	Foundation Mica Accent

SAMPLE ORDER CODE

JLEFK 10	**18**	**68**

DIMENSIONS
INCHES / MM

H	Storage D
10 / 254	18 / 457
10 / 254	24 / 610

PRICING

271
271

JLANN
Locker Number

The Metal Locker Number plates provide identification solution for lockers with metal or solid door. Applied only on doors with Number Ready Configuration.

WHAT'S INCLUDED
1 or 10 number front plates (as specified), 1 or 10 back plates (as specified) and mounting hardware.

WHAT'S EXCLUDED
Lockers and Elevated Lockers.

NOTES
The Number Ready Identification (S) must be specified with Lockers.

When One Plate Configuration (O) is specified, only One Plate Number is available.

When Set of 10 Plates Configuration (S) is specified, only Set of Plates Number is available.

When Metal Door Style (M) is specified, only With Back Plate Configuration (W) is available.

Refer to application guide.

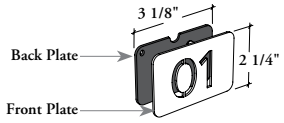

PRODUCT OPTIONS

Configuration	Number	Door Style	Front Plate Finish	Back Plate Configuration	Back Plate Finish (If Applicable)
O One Plate (Shown) **S** Set of 10 Plates	**One Plate:** 01, 02, 03, 04, 05, 06, 07, 08, 09, 10, 11, 12, 13, 14, 15, 16, 17, 18, 19, 20, 21, 22, 23, 24, 25, 26, 27, 28, 29, 30, 31, 32, 33, 34, 35, 36, 37, 38, 39, 40, 41, 42, 43, 44, 45, 46, 47, 48, 49, 50, 51, 52, 53, 54, 55, 56, 57, 58, 59, 60, 61, 62, 63, 64, 65, 66, 67, 68, 69, 70, 71, 72, 73, 74, 75, 76, 77, 78, 79, 80, 81, 82, 83, 84, 85, 86, 87, 88, 89, 90, 91, 92, 93, 94, 95, 96, 97, 98, 99 **Set of 10 Plates:** **0110** From 01 to 10 **1120** From 11 to 20 **2130** From 21 to 30 **3140** From 31 to 40 **4150** From 41 to 50 **5160** From 51 to 60 **6170** From 61 to 70 **7180** From 71 to 80 **8190** From 81 to 90	**M** Metal **S** Solid	Foundation Mica Accent	**N** None **W** With Back Plate (Shown)	Foundation Mica Accent

SAMPLE ORDER CODE

JLANN O	01	S	83	N	

CONFIGURATION	PRICING
One Plate	20
Set of 10 Plates	200

JLASR
Recycling/Disposal Unit Symbol

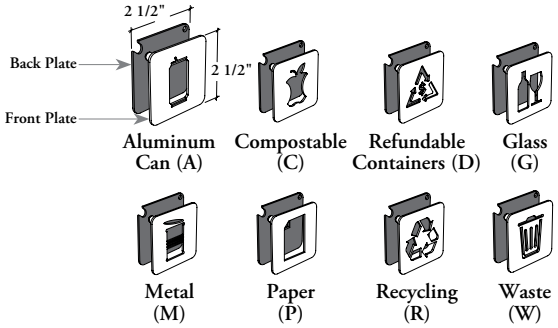

This metal symbol plate provide identification solution for Recycling/Waste Units with metal or solid door. Applied only on doors with Symbol Ready Configuration.

WHAT'S INCLUDED
1 symbol front plate (as specified), 1 back plate (as specified) and mounting hardware.

WHAT'S EXCLUDED
Recycling/Waste Unit and Recycling/Waste Unit with Storage.

NOTES
For installation, the Symbol Ready Identification (S) must be specified with Recycling/Waste Units.

When Metal Door Style (M) is specified, only With Back Plate Configuration (W) is available.

Refer to application guide.

PRODUCT OPTIONS

Symbol	Door Style	Front Plate Finish	Back Plate Configuration	Back Plate Finish (If Applicable)
A Aluminum Can	**M** Metal	Foundation	**N** None	Foundation
C Compostable	**S** Solid	Mica	**W** With Back Plate (Shown)	Mica
D Refundable Containers		Accent		Accent
G Glass				
M Metal				
P Paper				
R Recycling				
W Waste				

SAMPLE ORDER CODE

JLASR A	**S**	**83**	**N**	

PRICING

20

JLASS
Common Locker Symbol

This metal symbol plate provide identification solution for Common Lockers with metal or solid door. Applied only on doors with Symbol Ready Configuration.

WHAT'S INCLUDED
1 symbol front plate (as specified), 1 back plate (as specified) and mounting hardware.

WHAT'S EXCLUDED
Common Lockers and Elevated Common Lockers.

NOTES
For installation, the Symbol Ready Identification (S) must be specified with Common Lockers.

When Metal Door Style (M) is specified, only With Back Plate Configuration (W) is available.

Refer to application guide.

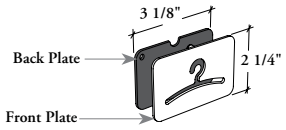

PRODUCT OPTIONS

Symbol	Door Style	Front Plate Finish	Back Plate Configuration	Back Plate Finish (If Applicable)
H Hanger	**M** Metal	Foundation	**N** None	Foundation
	S Solid	Mica	**W** With Back Plate (Shown)	Mica
		Accent		Accent

SAMPLE ORDER CODE

JLASS H	S	83	W	E

PRICING

20

JLKEE
Digital Lock Key

WHAT'S INCLUDED
1 digital lock key.

WHAT'S EXCLUDED
Digital Numeric Keypad Lock, Lockers and Elevated Lockers – Full Doors, Two- or Three-High Cubbies.

NOTES

	User Key (U)	Manager Key (M)	Programming Key (P)
Operates the lock	✓	✓	✓
Overrides user access	✕	✓	✓
Allows management inspection	✕	✓	✓
Provides external power	✕	✓	✓
Programs manager key to the lock	✕	✕	✓
Assigns user credentials (in assigned use functionality)	✕	✓	✕
Sets lock functionality	✕	✕	✓

Manager Key (M)

Programming Key (P)

User Key (U)

Up to six manager keys may be programmed on each lock.

Each lock can be paired with one Programming Key. One Programming Key per site is recommended.

Manager Key allows to assign up to 20 user credentials (user codes and/or user key) to each lock.

PRODUCT OPTIONS

Lock Style	Key Type
DV6 Versa 6th Generation	**M** Manager Key **P** Programming Key **U** User Key

SAMPLE ORDER CODE

JLKEE DV6	M

KEY TYPE	PRICING
P	177
M	140
U	90

accessories

accessories product map

J N A U O D Suspended Personal Storage – Open/Drawer

Page 1371

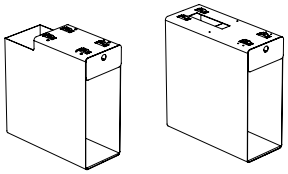

J N A U E Suspended Personal Storage – Door

Page 1372

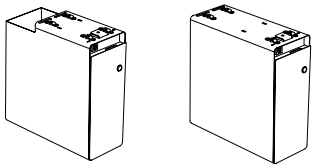

J N A M D Drawer Module

Page 1374

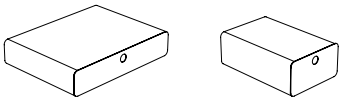

J N A M T Tray Module

Page 1375

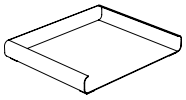

J N A P M Metal Screen Accessories

Page 1376

J N A U B Utility Box

Page 1377

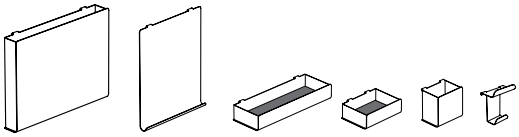

J N A P F Freestanding Planter Box

Page 1378

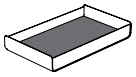

J N A P E L Planter Liner

Page 1379

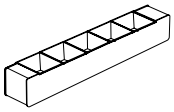

accessories product map

J N A S L Linear LED Light Support

Page 1380

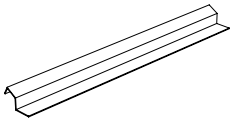

J N A M K Table Companion Marker Kit

Page 1381

J N A M E Dry-Erase Pads for Companion Marker Holder

Page 1382

J N A O S Box Drawer Organizers

Page 1383

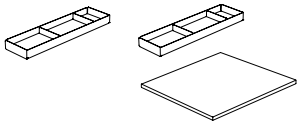

J N A S O File Drawer Organizers

Page 1384

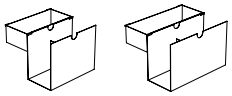

J N A B T Boot Tray

Page 1385

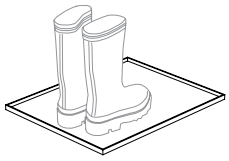

J N A C F Seat Pad – Felt

Page 1387

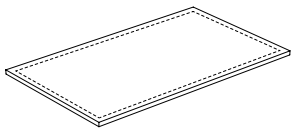

J N A C U Seat Cushion – Fabric

Page 1388

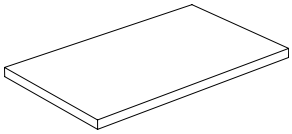

accessories product map

J N A B C F Beam-Mounted Seat Cushion

Page 1390

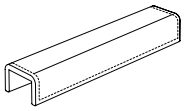

J N A B A B Bag Drop – Beam-Mounted

Page 1391

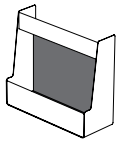

J N A B A S Side Tray – Beam-Mounted

Page 1392

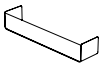

J N A B A T Tablet Support – Beam-Mounted

Page 1393

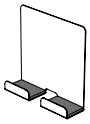

J N A B H Hook

Page 1394

J N A E K Dry-Erase Kit

Page 1395

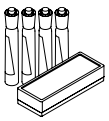

J N A R M Rare Earth Magnet Kit

Page 1396

JNAUOD

Suspended Personal Storage – Open/ Drawer

The Suspended Personal Storage offers casual suspended storage for personal items, books and small work bags.

WHAT'S INCLUDED
1 suspended personal storage case, 1 integrated pocket drawer, 1 felt drawer liner, 1 felt bottom liner and mounting hardware.

WHAT'S EXCLUDED
Worksurfaces.

NOTES
Refer to application guide.

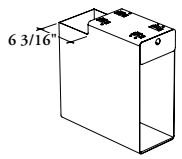

Height-Adjustable Table Frame Recessed (N)

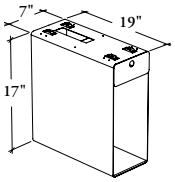

Standard (S)

PRODUCT OPTIONS

Mounting Style	Height	Width	Depth	Drawer Front Finish	Case Finish	Bottom Liner Finish	Key Style
N Height-Adjustable Frame Recessed	17	07	19	Foundation	Foundation	Loft	**N** No Lock
				Mica	Mica		
S Standard				Accent	Accent		

SAMPLE ORDER CODE

JNAUOD N	17	07	19	52	52	RB11	N

DIMENSIONS INCHES / MM

H	W	D
17 / 432	7 / 178	19 / 483

PRICING

530

JNAUE
Suspended Personal Storage – Door

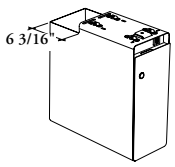

Height-Adjustable Table Frame Recessed (N)

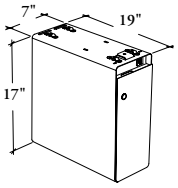

Standard (S)

The Suspended Personal Storage offers enclosed storage for personal items, books and small work bags in a lockable compartment. It can provide USB charging capacity.

WHAT'S INCLUDED
1 suspended personal storage case, 1 USB module (as specified), 1 utility box (as specified), 1 felt shelf liner, 1 felt bottom liner and mounting hardware.

WHAT'S EXCLUDED
Worksurfaces.

NOTES
When Metal Front Style option (D) is specified, only Key Style options (K, R or N) are available.

When Metal with Digital Lock Front Style option (O) is specified, only Key Style option (A) is available.

Refer to application guide.

PRODUCT OPTIONS

Front Style	Mounting Style	Height	Width	Depth	USB
D Metal (Shown) **O** Metal with Digital Lock	**N** Height-Adjustable Frame Recessed **S** Standard	17	07	19	**A** With USB A+A **B** With USB A+C **N** No USB

SAMPLE ORDER CODE

JNAUE D	N	17	07	19	N

PRODUCT OPTIONS CONTINUED

Utility Box	Orientation	Door and Utility Box Finish (If Applicable)	Case Finish	Liner Finish	Key Style
P With Utility Box **N** No Utility Box	**L** Left **R** Right (Shown)	Foundation Mica Accent	Foundation Mica Accent	Loft	**A** Digital Lock Assigned **K** Keyed Alike **R** Keyed Randomly **N** No Lock

SAMPLE ORDER CODE CONTINUED

P	L	52	52	RB11	N

See Pricing on the following page.

JNAUE

Suspended Personal Storage – Door (Continued)

DIMENSIONS INCHES / MM			PRICING					
			METAL (D)					
			WITH USB A+A (A)		WITH USB A+C (B)		NO USB (N)	
H	W	D	NO UTILITY BOX (N)	WITH UTILITY BOX (P)	NO UTILITY BOX (N)	WITH UTILITY BOX (P)	NO UTILITY BOX (N)	WITH UTILITY BOX (P)
17 / 432	7 / 178	19 / 483	718	805	842	929	537	624
			METAL WITH DIGITAL LOCK (O)					
17 / 432	7 / 178	19 / 483	927	1014	1051	1138	746	833

J N A M D
Drawer Module

This drawer provide personal storage in various positions within the workstation.

WHAT'S INCLUDED
1 drawer, felt liner and mounting hardware (if applicable).

NOTES
The Letter-size Drawer Module (L) can be installed centered in the upper open compartment for an Open/File Pedestal (JNFPSO).

Felt Liner is finished in Carbon (RB11).

Refer to application guide.

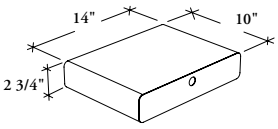

Letter (L)

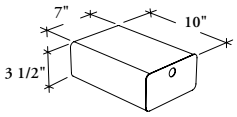

Pocket (P)

PRODUCT OPTIONS

Size	Mounting Style	Drawer Front Finish	Case Finish	Key Style
L Letter	**F** Freestanding	Foundation	Foundation	**N** No Lock
P Pocket	**O** Pedestal with Open Cubby	Mica	Mica	
	W Under Worksurface	Accent	Accent	

SAMPLE ORDER CODE

JNAMD L	F	52	52	N

MOUNTING STYLE

PRICING

	POCKET SIZE (P)	LETTER SIZE (L)
F	271	283
O	n/a	283
W	271	283

JNAMT
Tray Module

The Tray Module provides organizers for storing and sorting paper to accommodate the needs of the modern workstation user.

WHAT'S INCLUDED
1 tray with bumpers.

NOTES
Can be used as a freestanding item.

This tray is used with standard paper (letter-size) only and standard courrier envelopes. Flexible in application throughout a work environment.

Can be stacked to provide vertical storage.

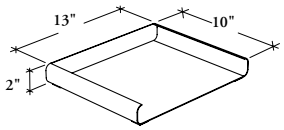

Letter (L)

PRODUCT OPTIONS

Size	Finish
L Letter	Foundation
	Mica
	Accent

SAMPLE ORDER CODE

JNAMT L	83

SIZE	PRICING
L	152

J N A P M
Metal Screen Accessories

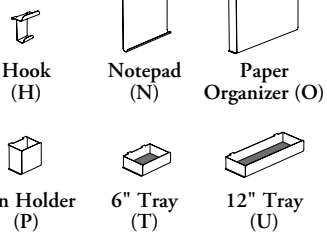

These metal accessories provide storage for a variety of common office accessories (pencil, paper, earphone, etc.) and also offer a small writable surface for note. Can be hanged on patterns or metal edge. They can be used in conjunction with many products to personalize a workstation and can be reconfigured when is required.

WHAT'S INCLUDED
1 hook, 1 notepad, 1 paper organizer, 1 pen holder, 6" or 12" tray with felt liner (as specified).

WHAT'S EXCLUDED
Lift and Drop Tile – Metal Accessory (JZTMA), Metal Elevated Screens (JNSMLH, JNSMEH, JNSMCH), Dry-Erase Kit (JNAEK) and Rare Earth Magnet Kit (JNARM).

NOTES
Whiteboard Finish (WZ) can be specified with Notepad (N) only.

Foundation, Mica or Accent Finish can be specified with Styles (H, O, P, T or U) only.

Liner Finish can be specified with Styles (P, T or U) only.

Refer to application guide.

PRODUCT OPTIONS

Style	Finish	Liner Finish (If Applicable)
H Hook	Foundation	Loft
N Notepad	Mica	
O Paper Organizer	Accent	
P Pen Holder	**WZ** Whiteboard	
T 6" Tray		
U 12" Tray		

SAMPLE ORDER CODE

JNAPM H	**52**	

STYLE	PRICING
H	66
N	174
O	117
P	94
T	106
U	113

JNAUB
Utility Box

This box provides casual personal storage in various positions within the workstation.

WHAT'S INCLUDED
1 utility box, 4 bumpers and 1 felt liner.

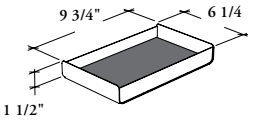

PRODUCT OPTIONS

Finish	Liner Finish
Foundation	Loft
Mica	
Accent	

SAMPLE ORDER CODE

JNAUB 52	RB12

PRICING

87

J N A P F
Freestanding Planter Box

This Freestanding Planter Box allows integration of biophilia on horizontal surface. Can be placed on a worksurface, a shelf and a storage top.

WHAT'S INCLUDED
1 freestanding planter box and planter liners (1 liner per 6" width between 48" to 66" Planter Box width and per 3" between 18", 24" to 48" Planter Box width).

NOTES
The Planter Liners are finished in Black only.

Liners is designed to protect the Planter Box interior by covering all metal edges and to manage exceeded watering in only one direction to reduce water spreading.

Liners can be easily remove for plant maintenance.

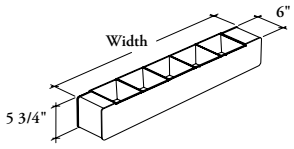

PRODUCT OPTIONS

Width	Finish
18, 24, 27, 30, 33, 36, 39, 42, 45, 48, 54, 60, 66	Foundation Mica Accent

SAMPLE ORDER CODE

JNAPF 36	**52**

DIMENSIONS INCHES / MM

PRICING

W	
18 / 457	189
24 / 610	202
27 / 686	209
30 / 762	215
33 / 838	221
36 / 914	227
39 / 991	234
42 / 1067	240
45 / 1143	246
48 / 1219	251
54 / 1372	269
60 / 1524	288
66 / 1676	306

JNAPEL
Planter Liner

This liner consist to a thin wall plastic container design to welcome soil or plant pot.

WHAT'S INCLUDED
1 planter liner.

WHAT'S EXCLUDED
Freestanding Planter Box (JNAPF) and Planter Box Kit – EZ Upper A-Frame Mounted (JZAPU).

NOTES
The Planter Liner is finished in Black only.

It is designed to protect the Planter Box interior by covering all metal edges and to manage exceeded watering in only one direction to reduce water spreading.

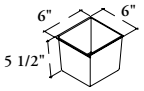

PRODUCT OPTIONS

Finish

B Black

SAMPLE ORDER CODE

JNAPEL B

FINISH	PRICING
B	12

JNASL
Linear LED Light Support

The Linear LED Light Support is installed under an Elevated Desk Shelf (JNMES) and allow the installation of a Linear LED Light (JNELED).

WHAT'S INCLUDED
1 support with mounting hardware.

WHAT'S EXCLUDED
Elevated Desk Shelf (JNMES), Linear LED Light (JNELED).

NOTES
The accessories can be reconfigured by the user along the Elevated Desk Shelf.

The specified width must be equal to the width of the Linear LED Light (JNELED).

Refer to application guide.

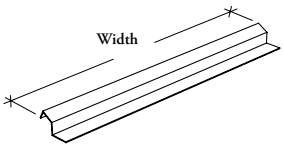

PRODUCT OPTIONS

LED Light Width	LED Light Optional Feature	Finish
24, 36, 48	**0** Light Only	Foundation Mica Accent

SAMPLE ORDER CODE

JNASL 24	0	52

LED LIGHT WIDTH	PRICING
W	
24 / 610	58
36 / 914	65
48 / 1219	70

JNAMK
Table Companion Marker Kit

Table Companion Marker Kit provides convenient for markers and dry eraser at the bottom.

WHAT'S INCLUDED
1 companion marker holder with integrated dry-erase pad, 3 dry-erase replacement pads and 4 dry-erase markers (red, blue, green and black).

WHAT'S EXCLUDED
Writable Glass Worksurfaces.

NOTES
Interior of the Companion Marker Holder is finished in felt: Carrara only (Loft).

Dry-Erase Pads are finished in felt: Carbon only (Loft).

PRODUCT OPTIONS

Companion Finish
Foundation
Accent
Mica

SAMPLE ORDER CODE

JNAMK 16

PRICING

152

J N A M E

Dry-Erase Pads for Companion Marker Holder

A kit of replacement dry-erase pads for Companion Marker Holder.

WHAT'S INCLUDED
3 dry-erase pads for companion marker holder.

WHAT'S EXCLUDED
Companion Marker Holder.

NOTES
Dry-Erase Pads are finished in felt: Carbon only (Loft).

PRODUCT OPTIONS

Quantity
03

SAMPLE ORDER CODE

JNAME 03

PRICING

48

JNAOS
Box Drawer Organizers

Provides compartmentalized common office acessories inside a box drawer of a Mobile Credenza or Mobile Pedestal.

WHAT'S INCLUDED

Organizer Only: 1 organizer, 1 felt organizer liner and 1 sliding tray.
Organizer with Drawer Liner: 1 organizer, 1 felt organizer liner, 1 sliding tray, 1 felt box drawer liner.

NOTES

Felt Drawer Liner is finished in Carbon (RB11).

Also compatible with other products, refer to application guide.

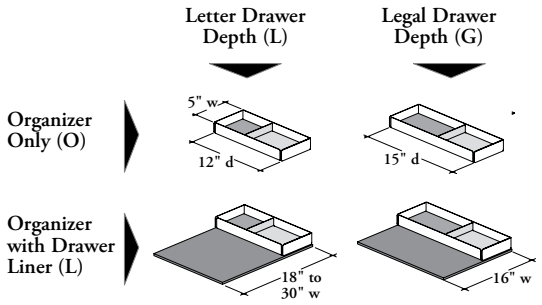

PRODUCT OPTIONS

Style	Drawer Depth	Drawer Width (If Applicable)	Organizer Finish	Sliding Tray Finish	Organizer Liner Finish
L Organizer with Drawer Liner	**G** Legal	16, 18, 24, 30	Foundation	Foundation	Loft
O Organizer Only	**L** Letter		Mica	Mica	
			Accent	Accent	

SAMPLE ORDER CODE

JNAOS O	L		83	83	RB11

DIMENSIONS
INCHES / MM

PRICING

	ORGANIZER ONLY (O)		ORGANIZER WITH DRAWER LINER (L)	
Drawer Width	LETTER (L)	LEGAL (G)	LETTER (L)	LEGAL (G)
N/A	166	172	n/a	n/a
16 / 406	n/a	n/a	n/a	237
18 / 457	n/a	n/a	231	n/a
24 / 610	n/a	n/a	254	n/a
30 / 762	n/a	n/a	273	n/a

JNASO
File Drawer Organizers

These File Drawer Organizers are organizational tools that can be used inside Pedestals or file drawers to provide personal storage space.

WHAT'S INCLUDED
1 lower cubby and 1 upper cubby with felt liner.

WHAT'S EXCLUDED
Storage.

NOTES
Can be mounted side-by-side or stacked.

Felt Liner is finished in Carbon (RB11).

Refer to application guide.

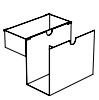

Letter (L)

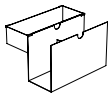

Legal (G)

PRODUCT OPTIONS

Drawer Depth	Upper Cubby Finish	Lower Cubby Finish
G Legal	Foundation	Foundation
L Letter	Mica	Mica
	Accent	Accent

SAMPLE ORDER CODE

JNASO G	53	53

DRAWER DEPTH	PRICING
G	138
L	125

JNABT
Boot Tray

The Boot Tray provide additional functionality for the bottom shelf of the towers or lockers.

WHAT'S INCLUDED
1 boot tray.

WHAT'S EXCLUDED
Beam Towers, Freestanding Towers and Lockers.

NOTES
Size Compatibilities:

Beam Tower (B): 24" or 30" d. – 12", 14", 18" w.

Freestanding Tower (F): 15" d. – 12" w.
18" d. – 12", 14" w.
24" d. – 12", 14", 24", 30", 36" w.

Locker (L): 18" d. – 12", 15", 18" w.
24" d. – 12", 15", 18", 24", 30", 36" w.

Finished in Recycled Paint only.

Refer to application guide.

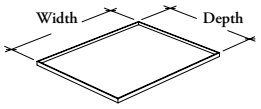

PRODUCT OPTIONS

Storage Type	Depth	Width
B Beam Tower	15, 18, 24, 30	12, 14, 15, 18, 24, 30, 36
F Freestanding Tower		
L Locker		

SAMPLE ORDER CODE

JNABT L	18	12

DIMENSIONS INCHES / MM

PRICING

D	W	BEAM TOWER (B)	FREESTANDING TOWER (F)	LOCKER (L)
15 / 381	12 / 305	n/a	37	n/a
15 / 381	14 / 356	n/a	n/a	n/a
15 / 381	15 / 381	n/a	n/a	n/a
15 / 381	18 / 457	n/a	n/a	n/a
15 / 381	24 / 610	n/a	n/a	n/a
15 / 381	30 / 762	n/a	n/a	n/a
15 / 381	36 / 914	n/a	n/a	n/a
18 / 457	12 / 305	n/a	44	44
18 / 457	14 / 356	n/a	49	n/a
18 / 457	15 / 381	n/a	n/a	49
18 / 457	18 / 457	n/a	n/a	54
18 / 457	24 / 610	n/a	n/a	n/a
18 / 457	30 / 762	n/a	n/a	n/a
18 / 457	36 / 914	n/a	n/a	n/a
24 / 610	12 / 305	**57**	57	57
24 / 610	14 / 356	**64**	64	n/a
24 / 610	15 / 381	n/a	n/a	64
24 / 610	18 / 457	**71**	n/a	71
24 / 610	24 / 610	n/a	85	85
24 / 610	30 / 762	n/a	99	99
24 / 610	36 / 914	n/a	113	113

J N A B T
Boot Tray (Continued)

DIMENSIONS INCHES / MM		PRICING		
D	W	BEAM TOWER (B)	FREESTANDING TOWER (F)	LOCKER (L)
30 / 762	12 / 305	**70**	n/a	n/a
30 / 762	14 / 356	**79**	n/a	n/a
30 / 762	15 / 381	n/a	n/a	n/a
30 / 762	18 / 457	**88**	n/a	n/a
30 / 762	24 / 610	n/a	n/a	n/a
30 / 762	30 / 762	n/a	n/a	n/a
30 / 762	36 / 914	n/a	n/a	n/a

JNACF
Seat Pad – Felt

This pad provides casual guest seating on top of a Credenza.

WHAT'S INCLUDED
1 seat pad and mounting hardware.

WHAT'S EXCLUDED
Storage.

NOTES
Refer to application guide.

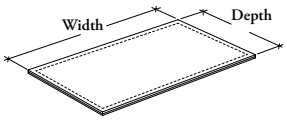

PRODUCT OPTIONS

Storage Style	Depth	Width	Seat Finish	Stitches Finish
D Double-Sided Beam-Mounted	18, 24	16, 24, 30, 36, 42, 48	Loft	**C** Carbon Coordinate
S Single-Sided Beam-Mounted				**E** Shale Coordinate
F Freestanding				**G** Carrara Coordinate
M Mobile				**M** Umber Coordinate

SAMPLE ORDER CODE

JNACF D	18	24	RB11	C

DIMENSIONS INCHES / MM

PRICING

D	W	FREESTANDING (F)	SINGLE- (S) OR DOUBLE-SIDED BEAM-MOUNTED (D)	MOBILE (M)
18 / 457	16 / 406	n/a	n/a	131
18 / 457	24 / 610	140	140	140
18 / 457	30 / 762	174	174	174
18 / 457	36 / 914	208	208	208
18 / 457	42 / 1067	242	242	242
18 / 457	48 / 1219	276	276	276
24 / 610	24 / 610	n/a	184	n/a
24 / 610	30 / 762	n/a	232	n/a
24 / 610	36 / 914	n/a	276	n/a
24 / 610	42 / 1067	n/a	324	n/a
24 / 610	48 / 1219	n/a	370	n/a

JNACU
Seat Cushion – Fabric

This seat cushion provides casual guest seating on top of a Credenza.

WHAT'S INCLUDED
1 seat cushion and mounting hardware.

WHAT'S EXCLUDED
Storage.

NOTES
Refer to application guide.

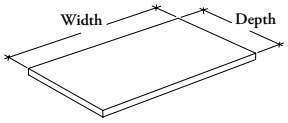

PRODUCT OPTIONS

Storage Style	Depth	Width	Finish
D Double-Sided Beam-Mounted	18, 24	16, 24, 30, 36, 42, 48	Fabric
S Single-Sided Beam-Mounted			
F Freestanding			
M Mobile			

SAMPLE ORDER CODE

JNACU F	18	36	E523

DIMENSIONS
INCHES / MM

PRICING

FREESTANDING (F)

D	W	Gr. 1	COM/ Gr. 2	COL/ Gr. 3	Gr. 4	Gr. 5	Gr. 6	Gr. 7	Gr. 8	Gr. 9	Gr. 10	Leather/ Gr. LA	Gr. LB	Gr. LC	Gr. LD
18 / 457	24 / 610	386	436	455	480	496	508	535	563	588	615	615	659	775	812
18 / 457	30 / 762	437	492	512	543	558	577	604	635	664	691	691	739	868	912
18 / 457	36 / 914	485	546	571	604	622	641	673	706	737	770	770	824	969	1015
18 / 457	42 / 1067	534	601	630	665	686	705	740	778	811	850	850	908	1068	1119
18 / 457	48 / 1219	583	655	689	725	752	769	809	851	884	929	929	992	1168	1224

SINGLE- (S) OR DOUBLE-SIDED BEAM-MOUNTED (D)

		Gr. 1	COM/ Gr. 2	COL/ Gr. 3	Gr. 4	Gr. 5	Gr. 6	Gr. 7	Gr. 8	Gr. 9	Gr. 10	Leather/ Gr. LA	Gr. LB	Gr. LC	Gr. LD
18 / 457	24 / 610	386	436	455	480	496	508	535	563	588	615	615	659	775	812
18 / 457	30 / 762	437	492	512	543	558	577	604	635	664	691	691	739	868	912
18 / 457	36 / 914	485	546	571	604	622	641	673	706	737	770	770	824	969	1015
18 / 457	42 / 1067	534	601	630	665	686	705	740	778	811	850	850	908	1068	1119
18 / 457	48 / 1219	583	655	689	725	752	769	809	851	884	929	929	992	1168	1224
24 / 610	24 / 610	442	494	514	543	560	572	604	635	661	690	690	741	849	885
24 / 610	30 / 762	499	556	579	614	630	647	680	712	746	777	777	831	952	998
24 / 610	36 / 914	554	617	644	681	703	719	757	795	828	865	865	926	1064	1114
24 / 610	42 / 1067	610	679	709	749	775	792	832	877	912	954	954	1021	1176	1228
24 / 610	48 / 1219	665	740	775	819	848	864	909	958	995	1042	1042	1116	1288	1344

Pricing is continued on the following page.

JNACU
Seat Cushion – Fabric (Continued)

DIMENSIONS
INCHES / MM

PRICING

D	W	MOBILE (M) Gr. 1	COM/ Gr. 2	COL/ Gr. 3	Gr. 4	Gr. 5	Gr. 6	Gr. 7	Gr. 8	Gr. 9	Gr. 10	Leather/ Gr. LA	Gr. LB	Gr. LC	Gr. LD
18 / 457	16 / 406	338	384	404	426	438	451	474	500	523	546	546	586	709	746
18 / 457	24 / 610	386	436	455	480	496	508	535	563	588	615	615	659	775	812
18 / 457	30 / 762	437	492	512	543	558	577	604	635	664	691	691	739	868	912
18 / 457	36 / 914	485	546	571	604	622	641	673	706	737	770	770	824	969	1015
18 / 457	42 / 1067	534	601	630	665	686	705	740	778	811	850	850	908	1068	1119
18 / 457	48 / 1219	583	655	689	725	752	769	809	851	884	929	929	992	1168	1224

J N A B C F
Beam-Mounted Seat Pad

This pad provides casual guest seating on top of structural beam.

WHAT'S INCLUDED
1 beam-mounted seat pad and mounting hardware.

WHAT'S EXCLUDED
Structural Beam or Chicago Structural Beam.

NOTES
Refer to application guide.

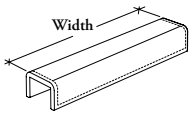

PRODUCT OPTIONS

Width	Seat Finish	Stitches Finish
21, 36	Loft	**C** Carbon Coordinate **E** Shale Coordinate **G** Carrara Coordinate **M** Umber Coordinate

SAMPLE ORDER CODE

JNABCF 21	**RB11**	**C**

DIMENSIONS INCHES / MM

W
21 / 533
36 / 914

PRICING

305
377

EZ compatible

JNABAB

Beam-Mounted Accessories – Bag Drop

This accessory is organizational tool that can be placed along the beam.

WHAT'S INCLUDED
1 bad drop, felt liner and mounting hardware.

WHAT'S EXCLUDED
Structural Beam, Chicago Structural Beam, EZ Fence Beam, EZ Fence Beam For Corridor, Chicago Fence Beam and Chicago EZ Fence Beam for Corridor.

NOTES
Refer to application guide.

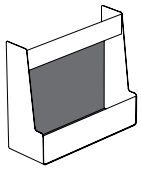

PRODUCT OPTIONS

Configuration	Finish	Liner Finish
D Double-Sided	Foundation	Loft
S Single-Sided	Mica	
	Accent	

SAMPLE ORDER CODE

JNABAB D	**52**	**RB11**

PRICING

SINGLE-SIDED (S)	DOUBLE-SIDED (D)
461	916

EZ compatible

JNABAS

Beam-Mounted Accessories – Side Tray

This accessory is organizational tool that can be placed along the beam.

WHAT'S INCLUDED
1 side tray, 1 felt liner and mounting hardware.

WHAT'S EXCLUDED
Structural Beam, Chicago Structural Beam, EZ Fence Beam, EZ Fence Beam For Corridor, Chicago Fence Beam and Chicago EZ Fence Beam for Corridor.

NOTES
Refer to application guide.

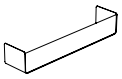

PRODUCT OPTIONS

Configuration	Finish	Liner Finish
D Double-Sided	Foundation	Loft
S Single-Sided	Mica	
	Accent	

SAMPLE ORDER CODE

JNABAS D	**52**	**RB11**

PRICING

SINGLE-SIDED (S)	DOUBLE-SIDED (D)
195	385

JNABAT
Beam-Mounted Accessories – Tablet Support

The Beam-Mounted Accessories are organizational tools that can be placed along the structural beam.

WHAT'S INCLUDED
1 or 2 tablet supports and mounting hardware.

WHAT'S EXCLUDED
Structural Beam or Chicago Structural Beam.

NOTES
Refer to application guide.

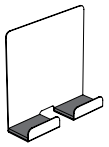

PRODUCT OPTIONS

Configuration	Finish	Liner Finish
D Double-Sided	Foundation	Loft
S Single-Sided	Mica	
	Accent	

SAMPLE ORDER CODE

JNABAT D	**52**	**RB11**

PRICING

SINGLE-SIDED (S)	DOUBLE-SIDED (D)
121	241

EZ compatible

J N A B H
Hook

This hook can be installed under on a worksurface or a beam to hang up two bags.

WHAT'S INCLUDED
1 hook, 1 mounting bracket for beam (if specified) and mounting hardware.

WHAT'S EXCLUDED
Strcutural Beam, EZ Fence Beam, Chicago Strcutural Beam, Chicago EZ Fence Beam, Worksurfaces and Height-Adjustable Worksurfaces.

Under Beam-Mounted (B)

Under Worksurface-Mounted (W)

PRODUCT OPTIONS

Style	Hook Finish
B Under Beam-Mounted	Foundation
W Under Worksurface-Mounted	Mica
	Accent

SAMPLE ORDER CODE

JNABH B	52

STYLE	PRICING
B	59
W	36

WHAT'S INCLUDED
4 Expo® dry-erase markers and 1 Expo® eraser.

JNAEK
Dry-Erase Kit

PRODUCT OPTIONS

Type
A Expo® Kit

SAMPLE ORDER CODE

JNAEK A

TYPE	PRICING
A	84

J N A R M
Rare Earth Magnet Kit

These magnets can be used with all magnetic surface to fasten items to a board for display.

WHAT'S INCLUDED
4 or 24 rare earth magnets (as specified).

WHAT'S EXCLUDED
All Metal Screens, Magnetic Glass Screens, Metal Accessories and Metal or Magnetic Glass Tiles.

NOTES
Are finished in Black only.

PRODUCT OPTIONS

Quantity of Magnet
04, 24

SAMPLE ORDER CODE

JNARM 24

QUANTITY OF MAGNET	PRICING
4	27
24	92

lighting, electrics & communications

lighting, electrics & communications product map

J N E L E D Linear LED Light

Page 1404

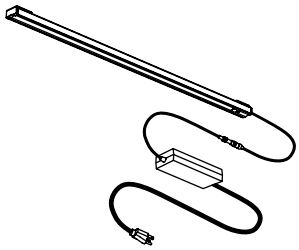

J N E A D Access Door

Page 1405

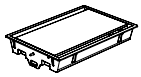

J N E W C S Single Wire Management Clips

Page 1406

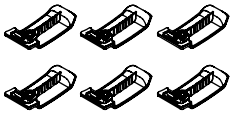

J N E W C Dual Wire Management Clips

Page 1407

J N E W P T Cable Tray

Page 1407

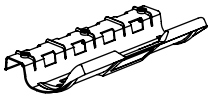

J N E W Y A Cable Organizer with Felt Cover

Page 1408

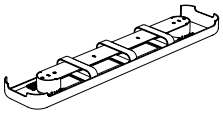

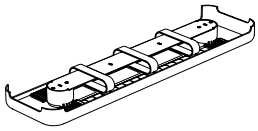

J N E W M T Cable Tray for Access Door

Page 1409

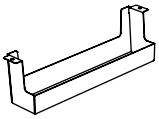

J N E C B Communication Box

Page 1409

lighting, electrics & communications product map

J N E C D B Facing Down Communication Box

Page 1410

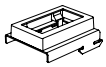

J N E D E Communication Extended Plate

Page 1411

J N E C B P Communication Blank Plate

Page 1412

J N E P C Power Qube

Page 1414

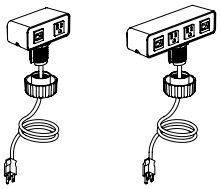

J N E T P P Power Pill

Page 1416

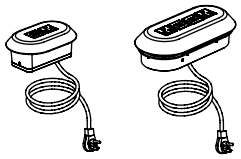

J N E T L P Linear Power Module

Page 1417

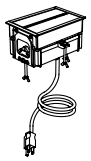

J N E P P Underworksurface Plug-In Power Bar

Page 1418

J N E P B Power Box

Page 1419

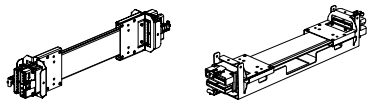

lighting, electrics & communications product map

J N E C P B Chicago Power Box

Page 1420

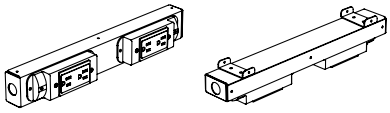

J N E P M H Power Module – Storage for Height-Adjustability

Page 1422

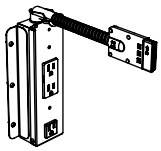

J N E C P H Chicago Power Module – Storage for Height-Adjustability

Page 1424

J N E P R O Receptacle Outlet

Page 1425

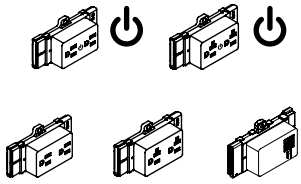

J N E P D B Four-Way Splitter

Page 1426

J N E P I C i-Connector

Page 1427

J N E C J B Chicago Junction Box

Page 1428

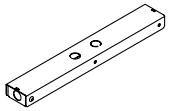

J N E P H Power Harness

Page 1429

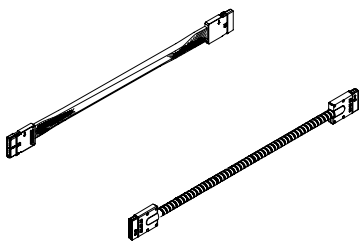

lighting, electrics & communications product map

J N E P B F Base Feed

Page 1430

J N E S B F Split Base Feed

Page 1431

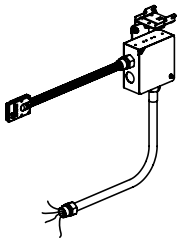

J N E P C F Ceiling Feed

Page 1432

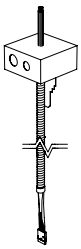

J N E W P P Power Pole

Page 1433

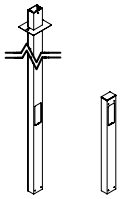

J N E W A C Wrap Around Cable Manager

Page 1434

J N E G Q Square Grommet

Page 1435

J N E G R Rectangular Grommet

Page 1436

J N E G P C Cable Pass-Through Cover

Page 1437

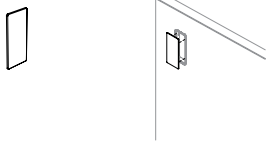

lighting, electrics & communications product map

J N E C F K USB/Data Faceplate Kit

Page 1438

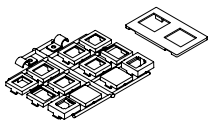

JNELED
Linear LED Light

The Linear LED Light is mounted on a Linear LED Light Support (JNASL) or to the underside of all Mounted Storage. It provides local task or ambiance lighting.

WHAT'S INCLUDED
1 light fixture with lens and switch, 1 power supply plug-in, 5 wire management channels and mounting hardware.

WHAT'S EXCLUDED
Linear LED Light Support (JNSASL).

NOTES
For countries other than those listed, contact Teknion's Customer Service.

Refer to application guide.

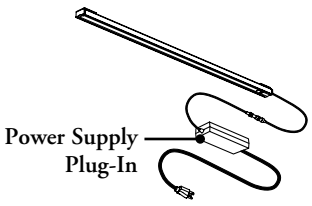

PRODUCT OPTIONS

Width	Plug Option	Mounting Option	Optional Feature	Country of Installation	Finish
24, 36, 48	**0** Standard	**S** Standard	**0** Light Only	**A** Canada/U.S.A	**AC** Clear Anodized

SAMPLE ORDER CODE

JNELED 24	0	S	0	A	AC

DIMENSIONS
INCHES / MM

W
24 / 610
30 / 762
36 / 914

PRICING

244
343
440

JNEAD
Access Door

The Access Door can be field-installed for direct access to structural beam power.

WHAT'S INCLUDED
1 access door.

NOTES
For wire management under the worksurface, a Cable Tray for Access Door (JNEWMT) can be specified separately.

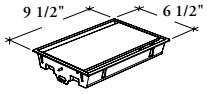

PRODUCT OPTIONS

Finish
Foundation
Mica
Accent

SAMPLE ORDER CODE

JNEAD 52

PRICING

	155

J N E W C S
Single Wire Management Clips

The Single Wire Management Clips can be screwed under the worksurface at the desired location.

WHAT'S INCLUDED
1 package of 6 clips and mounting hardware.

NOTES
This product is finished in black.

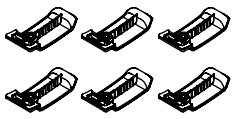

PRODUCT OPTIONS

Quantity of Clips
06 Six Clips

SAMPLE ORDER CODE

JNEWCS 06

PRICING

13

JNEWC
Dual Wire Management Clips

The Dual Wire Management Clips can be screwed under the worksurface at the desired location.

WHAT'S INCLUDED
1 package of 2 clips and mounting hardware.

NOTES
This product is finished in black.

PRICING

13

JNEWPT
Cable Tray

The Cable Tray attaches the underside of a worksurface to manage excess wires.

WHAT'S INCLUDED
1 cable tray and mounting hardware.

WHAT'S EXCLUDED
Underworksurface Plug-In Power Bar.

NOTES
The Underworksurface Plug-In Power Bar (JNEPP) can be clipped to this product.

Available in black only.

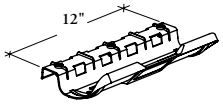

PRODUCT OPTIONS

Width
12

SAMPLE ORDER CODE

JNEWPT 12

DIMENSIONS INCHES / MM	PRICING
W	
12 / 305	21

J N E W Y A
Cable Organizer with Felt Cover

This organizer provides a unique and residential solution for cable management under the worksurface.

WHAT'S INCLUDED
1 metal cable organizer spine, 2 wire looms, 3 Velcro® straps, felt cover and mounting hardware.

WHAT'S EXCLUDED
Worksurfaces, hiSpace Worksurfaces with Quick Connect Kit and Navigate Height-Adjustable Worksurfaces.

NOTES
Cut out along one side to allow access for use with external and cross channel integrated powerbars available with hiSpace and Navigate.

Felt Cover is available in Grey Felt only.

Refer to specification software for available location.

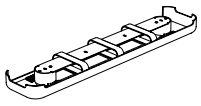

Small Cable Organizer (01)

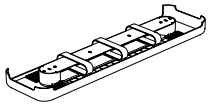

Large Cable Organizer (03)

PRODUCT OPTIONS

Configuration
01 Small Cable Organizer
03 Large Cable Organizer

SAMPLE ORDER CODE

JNEWYA 01

PRICING

JNEWMT
Cable Tray for Access Door

The Cable Tray for Access Door attaches to the underside of a worksurface to manage excess wires.

WHAT'S INCLUDED
1 cable tray for access door and mounting hardware.

WHAT'S EXCLUDED
Underworksurface Plug-In Power Bar and Access Door.

NOTES
The Underworksurface Plug-In Power Bar (JNEPP) can be stored in this product.

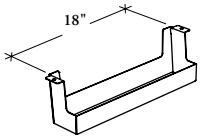

PRODUCT OPTIONS

Width	Finish
18	Foundation Mica Accent

SAMPLE ORDER CODE

JNEWMT 18	**52**

DIMENSIONS INCHES / MM

W
18 / 457

PRICING

49

JNECB
Communication Box

The Communication Box can be screwed under the worksurface at the desired location.

WHAT'S INCLUDED
1 communication box and mounting hardware.

WHAT'S EXCLUDED
Voice/data faceplates and jacks (must be field supplied and installed) and Wire Management Clips.

NOTES
The Communication Box has an opening of 2.71" x 1.38" (69 mm x 35 mm).

Finished in Platinum Coordinate.

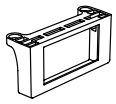

PRICING

38

EZ compatible

J N E C D B

Facing Down Communication Box

The Facing Down Communication Box enables the mounting of voice/data faceplates underneath a beam.

WHAT'S INCLUDED
1 communication extender plate and beam-mounted bracket.

WHAT'S EXCLUDED
Voice/data faceplates and jacks (must be field supplied and installed).

NOTES
The Communication Box has an opening of 2.71" x 1.38" (69 mm x 35 mm).

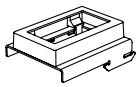

PRODUCT OPTIONS

Extender Plate Finish

- **YY** Ebony
- **YF** Storm White
- **YN** Platinum Grey Coordinate
- **YV** Very White Coordinate

SAMPLE ORDER CODE

JNECDB YY

PRICING

29

E-Z compatible

JNEDE

Communication Extender Plate

The Communication Extender Plate is placed over a communication opening of a structural beam to provide extended depth for data jacks which may be required in some applications.

WHAT'S INCLUDED
1 communication extender plate.

WHAT'S EXCLUDED
Voice/data faceplates and jacks (must be field supplied and installed) and Communication Blank Plate.

NOTES
Consult your data cabling supplier for clearance requirements.

A Communication Blank Plate (JNECBP) can be specified separately to hide the communication opening.

The Communication Box has an opening of 2.71" x 1.38" (69 mm x 35 mm).

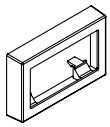

PRODUCT OPTIONS

Finish

YY Ebony
YF Storm White
YN Platinum Grey Coordinate
YV Very White Coordinate

SAMPLE ORDER CODE

JNEDE YY

PRICING

21

JNECBP
Communication Blank Plate

The Communication Blank Plate can be used to hide the communication opening of the Communication Entender Plate (JNEDE) or the pre-cutted communication opening in the structural beam.

WHAT'S INCLUDED
1 communication blank plate.

WHAT'S EXCLUDED
Structural Beam, Chicago Structural Beam and Communication Extender Plate.

NOTES
When the structural beam is covered with a Side Structural Beam Cover (JNDBCS), a Communication Blank Plate must be used in conjuction with a Communication Entender Plate (JNEDE).

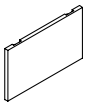

PRODUCT OPTIONS

Finish

YY Ebony
YF Storm White
YN Platinum Grey Coordinate
YV Very White Coordinate

SAMPLE ORDER CODE

JNECBP YV

PRICING

13

JNEPC
Power Qube

One Table
One Plug

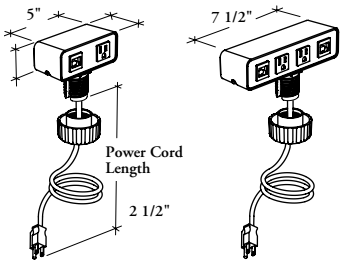

Connector and Cord Type

Plug-In (A)

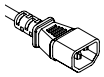

IEC Connector (C)

This product is mounted above a worksurface in the Square Cut-Out option or under the worksurface (as specified). It is used to provide quick power, data and USB access at the worksurface level.

WHAT'S INCLUDED

1 power qube with twistable attachment ring or under worksurface bracket and mounting hardware (as specified).

WHAT'S EXCLUDED

Square Grommet Ring (supplied with worksurface when specified) or Square Grommet for field installation.

NOTES

Must be installed in Square Grommet Ring.

The Square Cut-Out mounting option can be specified on worksurface to allow Power Qube installation.

Data Faceplate **not** included (if specified).

Refer to specification software for Under Worksurface Power Qube location.

IEC Connector option can only be used in combination with a Navigate Height-Adjustable Base specified with the Frame Integrated Powerbar with IEC Outlet option.

For more information about IEC Connector option (C), refer to One Table One Plug Application Guide in Complements: Teknion's Ergonomics & Accessories Programm.

Power Cord is a grey cloth covered type.

Each USB Outlet has one USB-A port and one USB-C port for charging only.

The USB-A port always supplies 10 Watts maximum at 5 Volts DC when used alone.

Standard USB-C Capacity (S):

The USB-C port supplies 18 Watts maximum at 5 to 12 Volts DC when used alone.

Maximum combined output is 15 Watts when both ports are used together: 5 Watts for USB-A port and 10 Watts for USB-C port.

High USB-C Capacity (U):

The USB-C port supplies 65 Watts at 5 to 20 Volts DC when used alone.

Due to limitations with transformer design, the maximum combined output is 30 Watts when both ports are used together: 10 Watts for USB-A port and 20 Watts for USB-C port

This reduced output in dual port mode **will not** support charging of laptops or quick charging of some phones/tablets that require more than 5 Volts DC.

The USB-C port will charge laptops up to 65 Watts and support Quick Charge when used in single port mode.

PRODUCT OPTIONS

Plug Type	Configuration		Mounting Option	Power Cord Length (Inches)	Country of Installation	Case and Front Finish
A Plug-In **C** IEC Connector	**D101N** Dual – 1 Power/0 USB/ 1 Data **D120S** Dual – 1 Power/2 USB/ 0 Data – Standard USB Capacity **D200N** Dual – Power Only **Q202N** Quad – 2 Power/0 USB/ 2 Data **Q221H** Quad – 2 Power/2 USB/ 1 Data – High USB Capacity	**Q221S** Quad – 2 Power/2 USB/ 1 Data – Standard USB Capacity **Q240S** Quad – 2 Power/4 USB/ 0 Data – Standard USB Capacity **Q320H** Quad – 3 Power/2 USB/ 0 Data – High USB Capacity **Q320S** Quad – 3 Power/2 USB/ 0 Data – Standard USB Capacity	**Q** Square Cut-Out **U** Under Worksurface	048, 072, 120, 180	**A** Canada/U.S.A.	Foundation Accent Mica

SAMPLE ORDER CODE

JNEPC A	D101N	Q	120	A	52

DIMENSIONS
INCHES / MM

PRICING

	PLUG-IN (A)								
L	D101N	D120S	D200N	Q202N	Q221S	Q221H	Q240S	Q320S	Q320H
48 / 1219	n/a	n/a	n/a	n/a	n/a	n/a	n/a	n/a	n/a
72 / 1829	278	348	256	391	462	538	531	412	488
120 / 3048	278	348	256	391	462	538	531	412	488
180 / 4572	343	412	321	454	525	601	594	476	552

Pricing is continued on the following page.

JNEPC
Power Qube (Continued)

DIMENSIONS
INCHES / MM

PRICING

	IEC CONNECTOR (C)								
L	D101N	D120S	D200N	Q202N	Q221S	Q221H	Q240S	Q320S	Q320H
48 / 1219	278	348	256	391	462	n/a	531	412	n/a
72 / 1829	278	348	256	391	462	n/a	531	412	n/a
120 / 3048	n/a	n/a	n/a	n/a	n/a	n/a	n/a	n/a	n/a
180 / 4572	n/a	n/a	n/a	n/a	n/a	n/a	n/a	n/a	n/a

J N E T P P
Power Pill

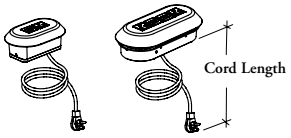

Dual Configuration (D120 or D200) **Quad Configuration (Q240 or Q320)**

The Power Pill provides access to power and USB to a worksurface.

WHAT'S INCLUDED
Dual Configuration: 1 power pill, 2 wire clips and mounting hardware.

Quad Configuration: 1 power pill, 2 wire clips, skirt and mounting hardware.

NOTES
USB-A Output: 5VDC (10 Watts).

Complete wired Power Pill with cord. Mounting bracket assembly with wire management and mounting hardware.

Not all configurations apply to all worksurface types. Refer to the Application Guide fore more details.

When Anthracite Finish (68) is specified, the outlets are finished in Black.

When Crisp Grey (25) or Platinum (60) Finish is specified, the outlets are finished in White.

PRODUCT OPTIONS

Configuration	Cord Length	Finish
D120 Dual – 1 Power/2 USB	120, 180	**25** Crisp Grey
D200 Dual – 2 Power/0 USB		**60** Platinum
Q240 Quad – 2 Power/4 USB		**68** Anthracite
Q320 Quad – 3 Power/2 USB		

SAMPLE ORDER CODE

JNETPP Q320	120	25

DIMENSIONS
INCHES / MM

L
120 / 3048
180 / 4572

PRICING

CONFIGURATION				
	D120	**D200**	**Q240**	**Q320**
	416	363	531	496
	451	399	567	531

JNETLP
Linear Power Module

The Linear Power Module provides quick power, data, USB and accessibility in both sides.

WHAT'S INCLUDED
1 linear power module and mounting hardware.

WHAT'S EXCLUDED
Faceplate (JNECFK) and Cable Rectractor Mechanism.

NOTES
Each USB Outlet has one USB-A port and one USB-C port for charging only.

The USB-A port always supplies 10 Watts maximum at 5 Volts DC when used alone.

The USB-C port supplies 18 Watts maximum at 5 to 12 Volts DC when used alone.

Maximum combined output is 15 Watts when both ports are used together: 5 Watts for USB-A port and 10 Watts for USB-C port.

The outlets are finished in Soft Gris.

Refer to local electrical code for guidance.

Not all configurations apply to all worksurface types. Refer to the Application Guide for details.

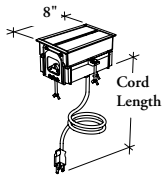

Compact 8" Configuration (C0220 or C0300)

PRODUCT OPTIONS

Configuration	Wire System	Cord Length	Door and Case Finish	Frame Finish
C0220 Compact 8" – 2 Power/2 USB/0 Media	**P** Plug-In	072, 180	Foundation	Foundation
C0300 Compact 8" – 3 Power/0 USB/0 Media			Mica	Accent
				Mica

SAMPLE ORDER CODE

JNETLP C0220	P	072	Q	Q

DIMENSIONS
INCHES / MM

L
72 / 1829
180 / 4572

PRICING

PLUG-IN (P)	
CONFIGURATION	
C0220	**C0300**
524	414
579	469

J N E P P

Underworksurface Plug-In Power Bar

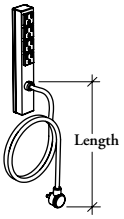

The power bar has four outlets and may be connected to a wall outlet.

WHAT'S INCLUDED
1 underworksurface plug-in power bar.

WHAT'S EXCLUDED
Mounting hardware and cable tray.

NOTES
This product has a flat 45º plug.

This product is finished in Clear Anodized.

PRODUCT OPTIONS

Length (Inches)
072, 120, 180

SAMPLE ORDER CODE

JNEPP 180

DIMENSIONS INCHES / MM

L
72 / 1829
120 / 3048
180 / 4572

PRICING

217
231
303

EZ compatible

JNEPB
Power Box

This Power Box is a module that mounts inside a beam to allow mounting of Receptacle Outlets that are facing sides or facing down.

WHAT'S INCLUDED
1 power box and mounting hardware.

WHAT'S EXCLUDED
Cable Tray, Cable Tray for Access Door and Receptacle Outlet.

NOTES
The Power Box mounts inside a Structural Beam (JNDBB), EZ Fence Beam (JZSBB) or EZ Fence Beam for Corridor (JZSBS).

Compatible with 7K, 7T, 8K and 8T wire systems.

Refer to application guide.

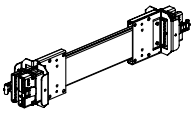

Facing Sides (B)

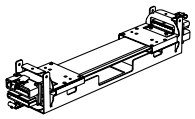

Facing Down (D)

PRODUCT OPTIONS

Mounting Style	Wire System	Country of Installation	PVC Option
B Facing Sides	**8K** 7K and 8K Wire Systems	**A** Canada/U.S.A.	**S** Standard
D Facing Down	**8T** 7T and 8T Wire Systems		**V** PVC Free

SAMPLE ORDER CODE

JNEPB B	8T	A	V

MOUNTING STYLE

PRICING

	Standard (S)	PVC Free (V)
B	145	157
D	181	197

EZ compatible

J N E C P B
Chicago Power Box

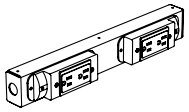

Facing Sides (B)

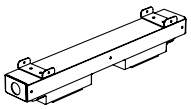

Facing Down (B)

This Chicago Power Box is a module that mounts inside a Chicago beam to provide power outlets that are facing sides or facing down.

WHAT'S INCLUDED
1 chicago power box with power outlets and mounting hardware.

WHAT'S EXCLUDED
Electrical wires (field supplied by electrician), Cable Tray and Cable Tray for Access Door.

NOTES
The Chicago Power Box mounts inside a Chicago Structural Beam (JNDCB), Chicago EZ Fence. Beam (JZSCB) or Chicago EZ Fence Beam for Corridor (JZSCS).

When Facing Down Mounting Style (D) is specified, the Double-Sided Configuration (D) is not available.

The connections must be executed by a qualified electrician.

Receptacle outlet matches with shroud finish.

Refer to application guide.

PRODUCT OPTIONS

Mounting Style	Configuration	Receptacle Style	Finish
B Facing Sides	**D** Double-Sided	**D** Controlled 15 Amp.	**60** Platinum
D Facing Down	**S** Single-Sided	**E** Controlled 20 Amp.	**83** Very White
		S Standard 15 Amp.	
		T T-Slot 20 Amp.	

SAMPLE ORDER CODE

JNECPB B	S	S	60

RECEPTACLE STYLE **PRICING**

	FACING SIDES (B)	FACING DOWN (D)	FACING SIDES (B)	FACING DOWN (D)
	SINGLE-SIDED CONFIGURATION (S)		DOUBLE-SIDED CONFIGURATION (D)	
D	409	434	588	n/a
E	480	505	738	n/a
S	409	434	588	n/a
T	480	505	738	n/a

J N E P M H

Power Module – Storage for Height Adjustability

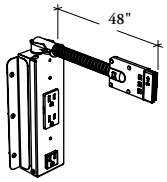

This Power Module mounts inside a Storage Cabinet for Height-Adjustable Run-Off (JNHSC) to provide power for height adjustable mechanism and other user power needs.

WHAT'S INCLUDED
1 power module and mounting hardware.

WHAT'S EXCLUDED
Storage Cabinet for Height-Adjustable Run-Off.

NOTES
Simplex are available in 15 Amps and without the controlled logo only.

Finished in Platinum.

PRODUCT OPTIONS

Wire System	Cable Length	Duplex Style
7K 7-Wire Dual Non Isolated	048	**D** Controlled 15 Amp.
7T 7-Wire Non Isolated Ground		**E** Controlled 20 Amp.
8K 8-Wire Dual Isolated		**S** Standard 15Amp.
8T 8-Wire Isolated Ground		**T** T-Slot 20 Amp.

SAMPLE ORDER CODE

JNEPMH 8T	048	S

PRODUCT OPTIONS CONTINUED

Outlet Configuration	Country of Installation	PVC Option
11A Circuits 1 & A (use with 7K or 7T)	**A** Canada/U.S.A.	**S** Standard
22A Circuits 2 & A (use with 7K or 7T)		**V** PVC Free
33A Circuits 3 & A (use with 7T only)		
11B Circuits 1 & B (use with 7K only)		
22B Circuits 2 & B (use with 7K only)		
AAB Circuits A & B (use with 7K only)		
BBA Circuits B & A (use with 7K only)		
115 Circuits 1 & 5 (use with 8K or 8T)		
116 Circuits 1 & 6 (use with 8K only)		
225 Circuits 2 & 5 (use with 8K or 8T)		
226 Circuits 2 & 6 (use with 8K only)		
335 Circuits 3 & 5 (use with 8T only)		

SAMPLE ORDER CODE

115	A	V

See Pricing on the following page.

J N E P M H

Power Module – Storage for Height Adjustability (Continued)

DUPLEX STYLE **PRICING**

	STANDARD (S)		PVC FREE (V)	
	7T or 8T	7K or 8K	7T or 8T	7K or 8K
D	313	327	376	394
E	321	336	384	406
S	313	327	376	394
T	321	336	384	406

JNECPH

Chicago Power Module – Storage for Height Adjustability

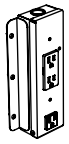

This Chicago Power Module mounts inside a Storage Cabinet for Height-Adjustable Run-Off (JNHSC) to provide power for height adjustable mechanism and other user power needs.

WHAT'S INCLUDED
1 Chicago power module and mounting hardware.

WHAT'S EXCLUDED
Electrical wires (supplied by electrician) and Storage Cabinet for Height-Adjustable Run-Off.

NOTES
Simplex are available in 15 Amps and without the controlled logo only.

The connections must be executed by a qualified electrician.

Finished in Platinum.

PRODUCT OPTIONS

Duplex Style

D Controlled 15 Amp.
E Controlled 20 Amp.
S Standard 15 Amp.
T T-Slot 20 Amp.

SAMPLE ORDER CODE

JNECPH S

DUPLEX STYLE	PRICING
D	244
E	283
S	244
T	283

EZ compatible

JNEPRO
Receptacle Outlet

This Receptacle Outlet mounts onto the Power Box to provide access to power.

WHAT'S INCLUDED
1 receptacle outlet and mounting hardware.

WHAT'S EXCLUDED
Power Box.

NOTES
Specified individually for maximum circuit flexibility.

Two receptacles can be mounted on each side of the Power Box (JNEPB) except when specified Facing Down.

Available in 15 Amp and 20 Amp (20 Amp only available in black).

If USB 5 VDC 2.1 Amp. Receptacle Style (U) is specified, the circuits 2, 3, 5, 6, A and B are **not** available.

Controlled 15 Amp (D)

Controlled 20 Amp (E)

Standard 15 Amp (S)

T-Slot 20 Amp (T)

USB 5 VDC 2.1 Amp (U)

PRODUCT OPTIONS

Receptacle Style	Outlet Configuration	Country of Installation	Finish
D Controlled 15 Amp.	**1** Circuit 1	**A** Canada/U.S.A.	**YY** Ebony
E Controlled 20 Amp.	**2** Circuit 2		**YF** Storm White
S Standard 15 Amp.	**3** Circuit 3 (use with 7T and 8T)		**YN** Platinum Grey Coordinate
T T-Slot 20 Amp.	**5** Circuit 5 (use with 8K and 8T)		**YV** Very White Coordinate
U USB 5 VDC 2.1 Amp.	**6** Circuit 6 (use with 8K only)		
	A Circuit A (use with 7K and 7T)		
	B Circuit B (use with 7K only)		

SAMPLE ORDER CODE

JNEPRO S	1	A	YY

RECEPTACLE STYLE	PRICING
D	29
E	32
S	29
T	32
U	150

EZ compatible

J N E P D B
Four-Way Splitter

The Four-Way Splitter attaches to a Power Harness to split power.

WHAT'S INCLUDED
1 four-way splitter.

NOTES
Can also connect a Power Harness (JNEPH) to a Base Feed (JNEPBF) or Ceiling Feed (JNEPCF).

PRODUCT OPTIONS

Country of Installation
A Canada/U.S.A.

SAMPLE ORDER CODE

JNEPDB A

PRICING

128

EZ compatible

JNEPIC
i-Connector

The connector is used to join two Power Harness when a single Power Harness length is not long enough.

WHAT'S INCLUDED
1 i-connector.

NOTES
Also required to connect a Power Harness (JNEPH) to a Base Feed (JNEPBF) or Ceiling Feed (JNEPCF).

PRODUCT OPTIONS

Country of Installation
A Canada/U.S.A.

SAMPLE ORDER CODE

JNEPIC A

PRICING

	36

EZ compatible

J N E C J B
Chicago Junction Box

This Chicago Junction Box is a module that mounts inside a Chicago Structural Beam (JNDCB), Chicago EZ Fence Beam (JZSCB) or Chicago EZ Fence Beam for Corridor (JZSCS) to enable splitting the in-feed into up to three outs.

WHAT'S INCLUDED
1 chicago junction box and mounting hardware.

WHAT'S EXCLUDED
Electrical wires, connectors and caps (field supplied by electrician).

NOTES
The connections must be executed by a qualified electrician.

Refer to application guide.

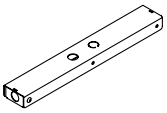

PRODUCT OPTIONS

Mounting Style
B Beam-Mounted

SAMPLE ORDER CODE

JNECJB B

PRICING

136

EZ compatible

JNEPH
Power Harness

The Power Harness connects Power Box to each other.

WHAT'S INCLUDED
1 power harness.

WHAT'S EXCLUDED
i-Connector, Base Feed and Ceiling Feed.

NOTES
Can be used to connect a Power Box to a Base Feed (JNEPBF) or Ceiling Feed (JNEPCF). In that application, an i-Connector (JNEPIC) must be specified separately.

Compatible with 7K, 7T, 8K and 8T wire systems.

A 24" long harness is supplied when 21" long Power Harness is specified.

Check local codes for limits or restrictions on harness length.

Refer to Application Guide for proper length calculation.

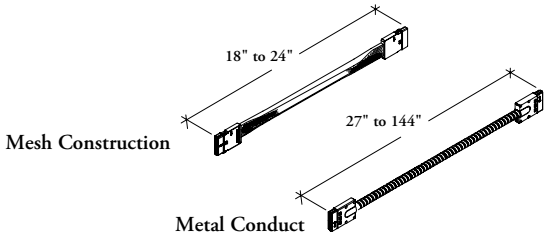

PRODUCT OPTIONS

Mounting Style	Wire System	Length	Country of Installation	PVC Option
B Beam-Mounted	**8K** 7K and 8K-Wire Systems **8T** 7T and 8T-Wire Systems	018, 021, 024, 027, 030, 033, 036, 039, 042, 045, 048, 051, 054, 057, 060, 063, 066, 069, 072, 075, 078, 081, 084, 087, 090, 093, 096, 099, 102, 105, 108, 111, 114, 117, 120, 123, 126, 129, 132, 135, 138, 141, 144	**A** Canada/U.S.A.	**S** Standard **V** PVC Free

SAMPLE ORDER CODE

JNEPH B	8T	120	A	V

DIMENSIONS INCHES / MM

PRICING

L	STANDARD (S) 8T or 8K	PVC FREE (V) 8Tor 8K
18 / 457	144	172
21 / 533	144	172
24 / 610	144	172
27 / 686	144	172
30 / 762	144	172
36 / 838	144	172
36 / 914	144	172
39 / 991	146	175
42 / 1067	148	177
45 / 1143	151	181
48 / 1219	152	183
51 / 1295	155	187
54 / 1372	158	190
57 / 1448	161	194
60 / 1524	165	197
63 / 1600	167	200
66 / 1676	168	201
69 / 1753	168	201
72 / 1829	171	202
75 / 1905	172	204
78 / 1981	173	206
81 / 2057	174	208
84 / 2134	175	209

DIMENSIONS INCHES / MM

PRICING

L	STANDARD (S) 8T or 8K	PVC FREE (V) 8T or 8K
87 / 2210	179	213
90 / 2286	182	217
93 / 2362	184	222
96 / 2438	187	226
99 / 2515	191	230
102 / 2591	195	232
105 / 2667	197	235
108 / 2743	200	238
111 / 2819	204	244
114 / 2896	209	249
117 / 2972	215	256
120 / 3048	219	263
123 / 2134	225	269
126 / 3200	230	274
129 / 2177	234	281
132 / 3353	238	287
135 / 3429	244	292
138 / 3505	248	298
141 / 3581	254	305
144 / 3658	260	311

EZ compatible

J N E P B F

Base Feed

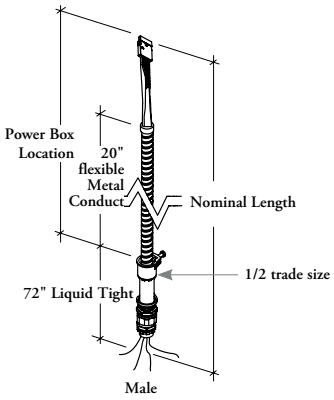

The Base Feed connects to the building supply and routes power into the workstation from the wall or floor.

WHAT'S INCLUDED
1 base feed and mounting hardware.

WHAT'S EXCLUDED
i-Connector and Four-Way Splitter.

NOTES
The Base Feed is mounted under a Structural Beam (JNDBB), EZ Fence Beam (JZSBB), EZ Fence Beam for Corridor (JZSBS), Chicago Structural Beam (JNDCB), Chicago EZ Fence. Beam (JZSCB) or Chicago EZ Fence Beam for Corridor (JZSCS).

The connection to the building power supply must be executed by a qualified electrician.

Check local codes for limits or restrictions on harness length.

Refer to Application Guide for applications.

PRODUCT OPTIONS

Wire System	Length	Country of Installation	PVC Option
7K 7-Wire Dual Non Isolated	036, 072	**A** Canada/U.S.A.	**S** Standard
7T 7-Wire Non Isolated Ground			**V** PVC Free
8K 8-Wire Dual Isolated			
8T 8-Wire Isolated Ground			

SAMPLE ORDER CODE

JNEPBF 8T	072	A	S

DIMENSIONS
INCHES / MM

L
36 / 914
72 / 1829

PRICING

STANDARD (S)	PVC FREE (V)
7T, 8T, 7K or 8K	7T, 8T, 7K or 8K
335	363
362	437

EZ compatible

JNESBF
Split Base Feed

The Split Base Feed connects to the building supply and routes power into the workstation from the wall or floor.

WHAT'S INCLUDED
1 split base feed and mounting hardware.

WHAT'S EXCLUDED
i-Connector and Four-Way Splitter.

NOTES
The Split Base Feed is mounted under a Structural Beam (JNDBB), EZ Fence Beam (JZSBB), EZ Fence Beam for Corridor (JZSBS), Chicago Structural Beam (JNDCB), Chicago EZ Fence. Beam (JZSCB) or Chicago EZ Fence Beam for Corridor (JZSCS).

The connection to the building power supply and in the junction box must be executed by a qualified electrician.

Check local codes for limits or restrictions on harness length.

Refer to Application Guide for applications.

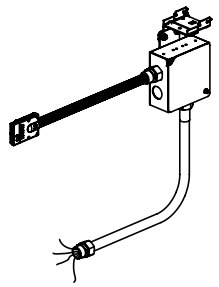

PRODUCT OPTIONS

Mounting Style	Wire System	Length	Country of Installation	PVC Option
B Beam-Mounted	**7K** 7-Wire Dual Non Isolated	036, 072	**A** Canada/U.S.A.	**S** Standard
	7T 7-Wire Non Isolated Ground			**V** PVC Free
	8K 8-Wire Dual Isolated			
	8T 8-Wire Isolated Ground			

SAMPLE ORDER CODE

JNESBF B	8T	072	A	S

DIMENSIONS
INCHES / MM

PRICING

L	STANDARD (S) 7T, 8T, 7K or 8K	PVC FREE (V) 7T, 8T, 7K or 8K
36 / 914	335	363
72 / 1829	362	437

EZ compatible

JNEPCF
Ceiling Feed

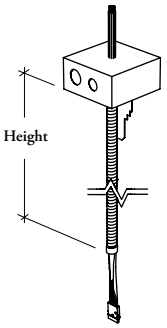

The Ceiling Feed includes a junction box to connect to the building supply and routes power into the workstation from the ceiling.

WHAT'S INCLUDED
1 ceiling feed, 1 junction box and mounting hardware.

WHAT'S EXCLUDED
i-Connector and Four-Way Splitter.

NOTES
Can be routed from the ceiling to the Power Box (JNEPB) through a Power Pole (JNEWPP).

The connection in the junction box and to the building power supply must be executed by a qualified electrician.

Check local codes for limits or restrictions on harness length.

Refer to Application Guide for applications.

PRODUCT OPTIONS

Wire System	Height (Power Pole)	Country of Installation	PVC Option
7K 7-Wire Dual Non Isolated	096, 120, 144	**A** Canada/U.S.A.	**S** Standard
7T 7-Wire Non Isolated Ground			**V** PVC Free
8K 8-Wire Dual Isolated			
8T 8-Wire Isolated Ground			

SAMPLE ORDER CODE

JNEPCF 8T	120	A	S

DIMENSIONS
INCHES / MM

PRICING

	STANDARD (S)		PVC FREE (V)	
H	7T or 8T	7K or 8K	7T or 8T	7K or 8K
96 / 2438	295	311	325	343
120 / 3048	328	346	394	413
144 / 3658	362	379	403	418

EZ compatible

JNEWPP
Power Pole

The Power Pole is used to safely route power and communication cables from the ceiling, the floor or the wall into the Structural Beam (JNDBB), EZ Fence Beam (JZSBB), EZ Fence Beam for Corridor (JZSBS), Chicago Structural Beam (JNDCB), Chicago EZ Fence. Beam (JZSCB) or Chicago EZ Fence Beam for Corridor (JZSCS).

WHAT'S INCLUDED
1 power pole, ceiling plates (if applicable) and mounting hardware.

WHAT'S EXCLUDED
Ceiling Feed and Base Feed.

NOTES
For Base Feed Application, when Structural Leg or EZ Structural Leg/Beam Mounting Option (S) and 29" height are specified, the cut-out on the back of the Power Pole is **not** available.

Low Structural Leg or Low Height EZ Fence Leg/Beam **cannot** be specified in the 29" length.

The opening can accommodate up to 36 data cables cat5 or 15 data cables cat6 and 1 Ceiling Feed.

Refer to Application Guide for applications.

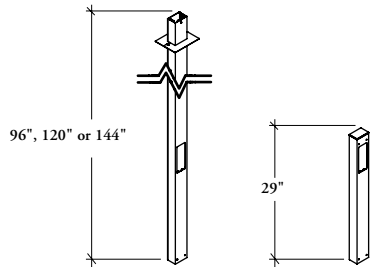

Ceiling Feed Application | Base Feed Application

PRODUCT OPTIONS

Mounting Option	Length	Finish
G Floor Screen	029, 096, 120, 144	Foundation
L Low Structural Leg/Beam		Mica
S Structural Leg/Beam		Accent

SAMPLE ORDER CODE

JNEWPP S	**120**	**52**

DIMENSIONS INCHES / MM

H
29 / 737
96 / 2438
120 / 3048
144 / 3658

PRICING

304
500
594
653

EZ compatible

JNEWAC
Wrap Around Cable Manager

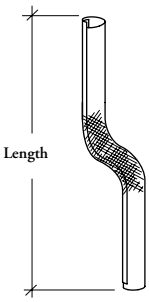

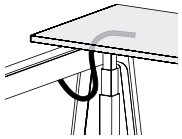

Height-Adjustable Table Configuration (H)

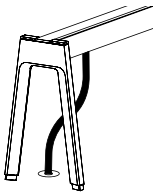

Base Feed Configuration (B)

The Wrap Around Cable Manager hides and routes power and communication cables from the floor, the wall or freestanding adjustable table to the Structural Beam (JNDBB), EZ Fence Beam (JZSBB), EZ Fence Beam for Corridor (JZSBS), Chicago Structural Beam (JNDCB), Chicago EZ Fence. Beam (JZSCB) or Chicago EZ Fence Beam for Corridor (JZSCS) or adjacent worksurface.

WHAT'S INCLUDED
1 mesh wrap around cable manager and mounting hardware.

NOTES
Base Feed (B) configuration has a 2" diameter and Height-Adjustable Table has a 1" diameter.

Refer to Application Guide for applications.

PRODUCT OPTIONS

Configuration	Length	Finish
B Base Feed	28, 38, 42, 52	**B** Black
H Height-Adjustable Table		**G** Grey

SAMPLE ORDER CODE

JNEWAC H	42	B

DIMENSIONS
INCHES / MM

Length
28 / 711
38 / 965
42 / 1067
52 / 1321

PRICING

Height-Adjustable Table (H)	Base Feed (B)
n/a	145
n/a	159
131	n/a
151	n/a

JNEGQ
Square Grommet

The Square Grommet can be field installed when cable management is needed or to install a Power Qube (JNEPC).

WHAT'S INCLUDED
1 square grommet and mounting hardware.

NOTES
The grommet ring finish match coordinate Soft Gris (B) only (Cover Finish as specified).

PRODUCT OPTIONS

Cover Finish
Foundation
Mica
Accent

SAMPLE ORDER CODE

JNEGQ 52

PRICING

	27

J N E G R
Rectangular Grommet

The Rectangular Grommet can be field installed when cable management is needed.

WHAT'S INCLUDED
1 rectangular grommet.

NOTES
The grommet ring finish is Ebony only (Cover Finish as specified).

PRODUCT OPTIONS

Cover Finish
Foundation
Mica
Accent

SAMPLE ORDER CODE

JNEGR 74

PRICING

	29

JNEGPC
Cable Pass-Through Cover

The Cable Pass-Through Cover is mounted on a Cable Pass-Through ring on Floor Screen, Beam Towers.

WHAT'S INCLUDED
1 cable pass-through cover.

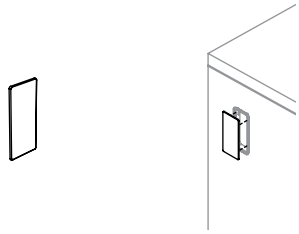

PRODUCT OPTIONS

Finish
Foundation
Mica
Coordinate Colors

SAMPLE ORDER CODE

JNEGPC 52

PRICING

	32

J N E C F K
USB/Data Faceplate Kit

Can be used with all standard rectangular data/communication opening.

WHAT'S INCLUDED
Data cover, voice/data adapters and mounting hardware.

WHAT'S EXCLUDED
Communication Box and Communication Extender Plate.

NOTES
Can accommodate up to two voice/data ports.

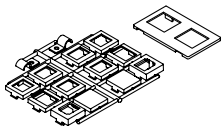

PRODUCT OPTIONS

Finish
YN Platinum Grey Coordinate

SAMPLE ORDER CODE

JNECFK YN

PRICING

53

teknion

www.teknion.com

IN CANADA:
1150 Flint Road
Toronto, Ontario
M3J 2J5 Canada
Tel 866.teknion
866.835.6466

IN THE USA:
350 Fellowship Road
Mt Laurel, New Jersey
08054 USA
Tel 877.teknion
877.835.6466

OTHER OFFICES LOCATED IN:
Europe, South and Central America
Middle East, Asia and Russia
For regional contact information
go to www.teknion.com

CAN/US/INT 01-22
©Teknion 2024

®, ™ trade marks of Teknion Corporation and/or its subsidiaries or licensed to it. Patents may be pending.

Some products may not be available in all markets. Contact your local Teknion Representative for availability.

JAN24-EXPCITY