world wide complements
(asia pacific)

price & application guide

02.27.2023

teknion

update summary

Please be advised that information has been updated within the World Wide Complements (Asia Pacific) Price & Application Guide. To highlight these updates, a summary has been created for your reference.

revised

A new base mechanism, Extended Range (9Y) has been added for the following products:

- hiSpace Single-Sided Frame (MHWBFYS)
- hiSpace Double-Sided Frame (MHWBFYD)
- hiSpace 120 Frame (MHWBFYT)
- hiSpace World Wide Height-Adjustable Freestanding – Base Only (MYWYR)
- hiSpace Basic 120 Height-Adjustable Freestanding Table – Base Only (MYNS)

Please note, first orders for new products will be accepted on February 27, 2023. All software will also be updated by February 27, 2023. If you have any questions regarding the information enclosed, please contact your Teknion Customer Service Representative.

WHAT IS WORLD WIDE COMPLEMENTS. 7

INDEX 14

WORLD WIDE HISPACE 17

WORLD WIDE NAVIGATE 199

understanding hispace height-adjustable bench & table

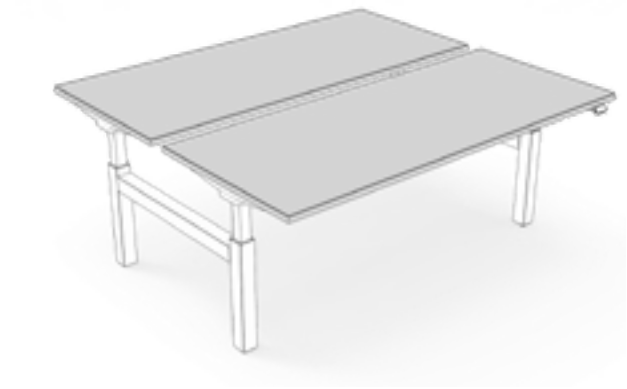

double-sided bench

- Double-sided frames
- Option of one base mechanism:
  - Extended Range Electric
- Two worksurface styles:
  - Rectangular with Square Corners
  - Rectangular with Radius Corners
- Worksurface finishes available:
  - Source Laminate
  - Foundation Laminate
- Cable Management option available
- Optional Screens
  - Spine Screens
  - Desk Edge Screens
  - End of Run Screens

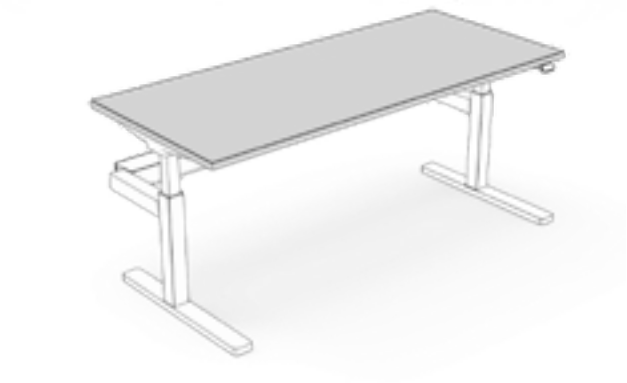

single-sided bench

- Single-Sided Frames
- Option of one base mechanism:
  - Extended Range Electric
- Two worksurface styles:
  - Rectangular with Square Corners
  - Rectangular with Radius Corners
- Worksurface finishes available:
  - Source Laminate
  - Foundation Laminate
- Cable Management option available
- Optional Screens
  - Corridor Screens

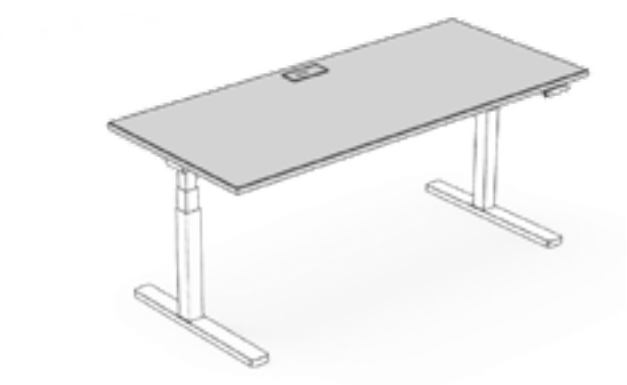

height-adjustable table

- Option of one base mechanism:
  - Extended Range Electric
- Two worksurface styles:
  - Rectangular with Square Corners
  - Rectangular with Radius Corner
- Worksurface finishes available:
  - Source Laminate
  - Foundation Laminate
- Cable Management option available
- Optional Screens
  - Desk Edge Screens

double-sided height-adjustable bench typicals

The following typicals demonstrate the versatility of the Double, Single-Sided Height-Adjustable Bench and Height-Adjustable Tables.

double-sided height-adjustable bench 01

double-sided height-adjustable bench 02

single-sided height-adjustable bench typicals

single-sided height-adjustable bench 01

single-sided height-adjustable bench 02

height-adjustable table typicals

height-adjustable table 01

height-adjustable table 02

understanding world wide navigate

World Wide Navigate is our newest addition to our growing height-adjustable offering. Expanding on the benefits of an everyday sit/stand workstation, Navigate creates multiple ways of working wherever you are. Highlighted by a signature display switch with sit/stand GPS, Navigate creates a responsive and impactful work area to get you where you need to go.

World Wide Navigate Freestanding Height-Adjustable Desking is experience driven, integrates responsive innovation, and creates everyday impact. Highlighted by the same leg geometry, modern design, soft edges, new materials and signature toggle display switch with sit/stand GPS, Navigate and World Wide Navigate share a responsiveness and impact that focuses on you.

In partnership with LINAK, the world leader in linear actuators, we are able to offer World Wide Navigate with common regionally sourced components, geo-specific electrical accommodations and favorable lead times. World Wide Navigate offers an additional extended height-adjustment range - not included in the standard Navigate offering of 24-1/2" to 50-1/2" or 622 mm to 1282 mm.

introduction

where to find the information you need

Teknion provides an array of tools and information resources to help you get things done simply and easily. From product pricing to application guidelines to online planning suggestions, you will find what you need when you need it.

guide contents

This guide contains all the information you need to order this product through your specification software. The Introduction section provides everything you need to get started, including an index for product reference. The Application Guide section contains detailed specification guidelines, application and planning information to help you plan your project correctly. The Price Guide sections provide detailed pricing and specification information by product type. Available online at www.teknion.com.

where to find the information you need

All Teknion marketing materials are available online at www.teknion.com, including:

price & product guide

application guide

planning tool

installation guides

fabrics & finishes

product photography & drawings

weights & volumes

order forms

warranty/terms & conditions of sale

xpress program guide

teknion forms

The following forms are available online at www.teknion.com, to help you specify and place your order if required:

teknipaint

If you require a custom paint color match, you must submit a TekniPaint form.

using your own material (COM)

If you wish to use your own material on fabric-covered products, you must submit a completed COM form including a sample upholstery and safety testing. A COM Order Information Sheet must also be submitted. This form captures all relevant ordering and tracking information. A COM Request for Yardage Calculation form may be sent to Teknion for preliminary yardage requirements.

placing a manual order

Complete an Order Cover Sheet with the information we need to fill your order. This is the most important step. If the Order Cover Sheet is not complete and correct, the order may be delayed.

key requirements

If you require that certain pieces share the same locks you will need to specify Set of Keys Alike (SOKL) located in the Price and Product Guide.

user feedback

How is our marketing material working for you?

Feedback from the user is very important to the quality of Teknion's marketing material. We ask that if you have suggestions on how you think we could improve content OR if you have found an error, that you contact your Teknion Technical Services department.

index

Section Contents	Product Code	Page No.
WHAT IS WORLD WIDE COMPLEMENTS		
Understanding hiSpace Height-Adjustable Bench & Table		7
Double-Sided Height-Adjustable Bench Typicals		8
Single-Sided Height-Adjustable Bench Typicals		9
Height-Adjustable Table Typicals		10
Understanding World Wide Navigate		11
WORLD WIDE HISPACE		
APPLICATION GUIDE		
Understanding Application Guide Pages		23
Collision Detection		24
Double & Single-Sided Frame Overview		25
Double & Single-Sided Frame Basics		28
Planning with Double & Single-Sided Frames		29
Single-Sided Frame Weldment Cover Basics		32
Planning with Single-Sided Frame Weldment Covers		33
Double & Single-Sided Base Link Basics		34
Planning with Double-Sided Base Links		35
Planning with Single-Sided Base Links		37
Double & Single-Sided Spine Tray Basics		39
Planning with Double-Sided Spine Trays		40
Planning with Single-Sided Spine Trays		41
Universal Spine Tray Cover Basics		44
Planning with Universal Spine Tray Covers		45
Double & Single-Sided Rectangular Worksurface Basics		46
Planning with Double & Single-Sided Rectangular Worksurfaces		48
Under Worksurface Cable Tray Basics		52
Planning with Under Worksurface Cable Tray		53
Power Bar Holder for Spine Tray Basics		55
Double & Single-Sided Cable Riser Basics		56
Planning with Double-Sided Cable Riser		57
Planning with Single-Sided Cable Riser – mid		58
Planning with Single-Sided Cable Riser – end		58
End Gable Basics		61
Planning with End Gables		62
Vertical Wire Carrier Basics		63
Planning with Vertical Wire Carrier		64
Vertical Wire Carrier Bracket and Cover Basics		65
Felt Cable Cover Organizer Basics		66
Wire Bridge Basics		67
Wire Cover Basics		68
Planning with Wire Covers		69
Double-Sided Screens Overview		71
Double-Sided Spine Screen Basics		72
Planning with Double-Sided Spine Screens		73
Double-Sided Desk Edge Screen Basics		74
Planning with Double-Sided Desk Edge Screens		75
Double-Sided End of Run Screen Basics		76
Planning with Double-Sided End of Run Screens		77
Single-Sided Corridor Screen Basics		78
Planning with Single-Sided Corridor Screens		78
Height-Adjustable Table Frame Overview		80
Height-Adjustable Table Frame Basics		81
Planning with Height-Adjustable Table Frames		82
Height-Adjustable Table Worksurface Basics		84
Planning with Height-Adjustable Table Worksurfaces		85
Under Worksurface Cable Tray for Tables Basics		86
Planning with Under Worksurface Cable Trays for Tables		87
Vertical Wire Carrier for Tables Basics		88
Felt Cable Cover Organizer for Tables Basics		89
Modesty Panel Basics		90
Planning with Modesty Panels		91
Desk Edge Screen Basics		92
Planning with Desk Edge Screens		93
Planning with Radius Corner Desk Edge Screen for Freestanding Tables		94
Bag Drop Basics		95
Bag Drop Finishes		96
Hanging Whiteboard Basics		97
DOUBLE-SIDED HEIGHT-ADJUSTABLE BENCH		
Double-Sided Frame	MHWBFYD	106
Double-Sided Base Link	MHWBFBD	107
Double-Sided Spine Tray – Low Capacity	MHWBFTL	108
Double-Sided Spine Tray – Medium Capacity	MHWBFTM	109
Double-Sided Spine Tray – High Capacity	MHWBFTH	110
Double-Sided Rectangular Worksurface with Square Corners	MHWBWBD	112
Double-Sided Rectangular Worksurface with Radius Corners	MHWBWJD	114
Double-Sided Desk Edge Screen – Infinity	MHWBCDX	116
Double-Sided Spine Screen – Beveled Fabric	MHWBCTC	117
Double-Sided Spine Screen – Framed Fabric Screen	MHWBCTF	118
Double-Sided Spine Screen – Solid	MHWBCTS	119
Double-Sided Cable Riser	MHWBECD	120
Double-Sided End of Run Screen – Beveled Fabric	MHWBTWC	121
Double-Sided End of Run Screen – Framed Fabric Screen	MHWBTWF	122
Double-Sided End of Run Screen – Solid	MHWBTWS	123
SINGLE-SIDED HEIGHT-ADJUSTABLE BENCH		
Single-Sided Frame	MHWBFYS	128
Single-Sided Frame Weldment Cover	MHWBFSC	129
Single-Sided Base Link	MHWBFBS	130
Single-Sided Spine Tray – Low Capacity	MHWBFSL	131
Single-Sided Spine Tray – Medium Capacity	MHWBFSM	132
Single-Sided Spine Tray – High Capacity	MHWBFSH	133
Single-Sided Rectangular Worksurface with Square Corners	MHWBWBS	134
Single-Sided Rectangular Worksurface with Radius Corners	MHWBWJS	136
Single-Sided Cable Riser – End	MHWBECE	138
Single-Sided Cable Riser – Mid	MHWBECM	139

index

Section Contents	Product Code	Page No.
Single-Sided Corridor Screen – Beveled Fabric	MHWBLSC	140
Single-Sided Corridor Floor Screen – Beveled Fabric	MHWBLSCF	141
Single-Sided Corridor Screen – Framed Fabric	MHWBLSF	142
Single-Sided Corridor Floor Screen – Framed Fabric	MHWBLSFF	143
Single-Sided Corridor Screen – Solid	MHWBLSS	144
Single-Sided Corridor Floor Screen – Solid	MHWBLSSF	145
Single-Sided Leveler Extension Blocks	MHWBFWK	146
Single-Sided Corridor Screen Alignment Clip - Solid	MHWBLBS	147
120 HEIGHT-ADJUSTABLE BENCH		
120 Frame	MHWBFYT	151
120 Worksurface with Square Corners	MHWBWBT	152
120 Worksurface with Radius Corners	MHWBWJT	154
3-Way 120 Screen Aligner	MHWBCAT	156
120 Cable Riser - Mid	MHWBECMT	157
120 Wire Bridge	MHWBEWT	158
UNIVERSAL COMPONENTS		
Universal Spine Tray Cover	MHWBFTV	162
Wire Cover	MHWBEWV	163
Wire Bridge	MHWBEWB	164
Under Worksurface Cable Tray	MHWBEUY	165
Vertical Wire Carrier	MHWBEEE	166
Vertical Wire Carrier Bracket & Cover	MHWBEEB	167
Felt Cover Cable Organizer	MHWBEWY	168
Power Bar Holder for Spine Trays	MHWBETP	169
End Gable	MHWBCGE	170
Hanging Whiteboard	MHWBAWW	171
Bag Drop	MHWBAWR	172
hiSpace Workstation Name Plate	MHWBANP	173
hiSpace Spine Tray End Cover	MHWBFTC	174
hiSpace Smooth Felt Lateral Screen	MHWBCLZ	175
HEIGHT-ADJUSTABLE TABLES		
hiSpace World Wide Height-Adjustable Freestanding – Base Only	MYWYR	179
hiSpace World Wide Rectangular Worksurface	MYWWB	180
hiSpace World Wide Rectangular Worksurface with Radius Corners	MYWWJ	182
hiSpace 120 Height-Adjustable Freestanding Table – Base Only	MYNS	184
hiSpace Freestanding 120 Worksurface with Square Corners	MYWBWBT	186
hiSpace Freestanding 120 Worksurface with Radius Corners	MYWBWJT	188
Under Worksurface Cable Tray for Freestanding Height-Adjustable Table	MYWUY	190
Vertical Wire Carrier for Freestanding hiSpace World Wide	MYWEE	191
Infinity Curved Desk Edge Screen for Freestanding Height-Adjustable Table	MYWXC	192
Infinity Desk Edge Screen for Freestanding Height-Adjustable Table	MYWXD	193
Desk Edge Screen – Framed Fabric	MYWFD	194
Modesty Panel for Freestanding Height-Adjustable Table – Solid	MYWMS	195
Modesty Panel for Freestanding Height-Adjustable Table – Smooth Felt	MYWMF	196
WORLD WIDE NAVIGATE		
NAVIGATE APPLICATION GUIDE		
Navigate Overview		202
Navigate Height-Adjustable Table Basics		203
Planning with Navigate		204
Navigate Table Edge Trim Styles		209
NAVIGATE PRICE & PRODUCT GUIDE		
Navigate World Wide Height-Adjustable Freestanding Table Base Only	YW3	212
Rectangular Height-Adjustable Worksurface for Navigate World Wide	WY3	214

world wide hispace

world wide hispace

HISPACE APPLICATION GUIDE 19

HISPACE PRICE & PRODUCT GUIDE 101

hispace
application guide

hispace application guide

UNDERSTANDING APPLICATION GUIDE PAGES 23
COLLISION DETECTION 24
DOUBLE & SINGLE-SIDED FRAME OVERVIEW 25
DOUBLE & SINGLE-SIDED FRAME BASICS 28
PLANNING WITH DOUBLE & SINGLE-SIDED FRAMES 29
SINGLE-SIDED FRAME WELDMENT COVER BASICS 32
PLANNING WITH SINGLE-SIDED FRAME WELDMENT COVERS 33
DOUBLE & SINGLE-SIDED BASE LINK BASICS 34
PLANNING WITH DOUBLE SIDED BASE LINKS. 35
PLANNING WITH SINGLE-SIDED BASE LINKS 37
DOUBLE & SINGLE-SIDED SPINE TRAY BASICS 39
PLANNING WITH DOUBLE-SIDED SPINE TRAYS 40
PLANNING WITH SINGLE-SIDED SPINE TRAYS 41
UNIVERSAL SPINE TRAY COVER BASICS 44
PLANNING WITH UNIVERSAL SPINE TRAY COVERS. 45
DOUBLE & SINGLE-SIDED RECTANGULAR WORKSURFACE BASICS .46
PLANNING WITH DOUBLE & SINGLE-SIDED RECTANGULAR WORKSURFACES 48
UNDER WORKSURFACE CABLE TRAY BASICS. 52
PLANNING WITH UNDER WORKSURFACE CABLE TRAYS 53
POWER BAR HOLDER FOR SPINE TRAY BASICS 55
DOUBLE & SINGLE-SIDED CABLE RISER BASICS 56
PLANNING WITH DOUBLE-SIDED CABLE RISER 57
PLANNING WITH SINGLE-SIDED CABLE RISER – MID 58
PLANNING WITH SINGLE-SIDED CABLE RISER – END 58
END GABLE BASICS. 61
PLANNING WITH END GABLES 62
VERTICAL WIRE CARRIER BASICS 63
PLANNING WITH VERTICAL WIRE CARRIER 64
VERTICAL WIRE CARRIER BRACKET & COVER BASICS. 65
FELT CABLE COVER ORGANIZER BASICS. 66

CONTINUED ON NEXT PAGE

hispace application guide

WIRE BRIDGE BASICS 67
WIRE COVER BASICS 68
PLANNING WITH WIRE COVERS 69
DOUBLE-SIDED SCREENS OVERVIEW 71
DOUBLE-SIDED SPINE SCREEN BASICS 72
PLANNING WITH DOUBLE-SIDED SPINE SCREENS 73
DOUBLE-SIDED DESK EDGE SCREEN BASICS 74
PLANNING WITH DOUBLE-SIDED DESK EDGE SCREENS 75
DOUBLE-SIDED END OF RUN SCREEN BASICS 76
PLANNING WITH DOUBLE-SIDED END OF RUN SCREENS 77
SINGLE-SIDED CORRIDOR SCREEN BASICS 78
PLANNING WITH SINGLE-SIDED CORRIDOR SCREENS 79
HEIGHT-ADJUSTABLE TABLE FRAME OVERVIEW 80
HEIGHT-ADJUSTABLE TABLE FRAME BASICS 81
PLANNING WITH HEIGHT-ADJUSTABLE TABLE FRAMES 82
HEIGHT-ADJUSTABLE TABLE WORKSURFACE BASICS 84
PLANNING WITH HEIGHT-ADJUSTABLE TABLE WORKSURFACES . . . 85
UNDER WORKSURFACE CABLE TRAY FOR TABLES BASICS 86
PLANNING WITH UNDER WORKSURFACE CABLE TRAYS FOR TABLES 87
VERTICAL WIRE CARRIER FOR TABLES BASICS 88
FELT CABLE COVER ORGANIZER FOR TABLES BASICS 88
MODESTY PANEL BASICS 90
PLANNING WITH MODESTY PANELS 91
DESK EDGE SCREENS BASICS 92
PLANNING WITH DESK EDGE SCREENS 93
PLANNING WITH RADIUS CORNER DESK EDGE SCREEN FOR FREESTANDING TABLES 94
BAG DROP BASICS 95
BAG DROP FINISHES 96
HANGING WHITEBOARD BASICS 97

understanding application guide pages

This application guide will include the following types of pages.

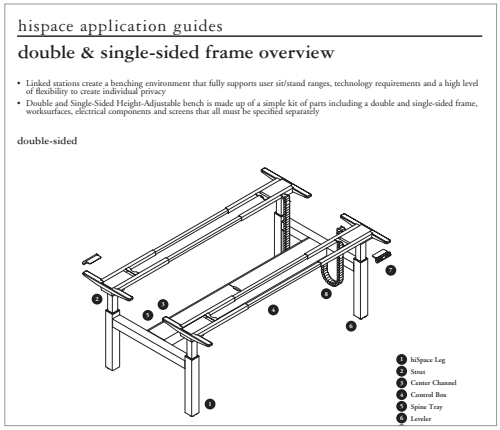
hispace application guides

double & single-sided frame overview

- Linked stations create a benching environment that fully supports user sit/stand ranges, technology requirements and a high level of flexibility to create individual privacy
- Double and Single-Sided Height-Adjustable bench is made up of a simple kit of parts including a double and single-sided frame, worksurfaces, electrical components and screens that all must be specified separately

double-sided

1 InSpace Leg
2 Strut
3 Center Channel
4 Control Box
5 Spine Tray
6 Leveler

overview pages

Used to describe the intent and common features of a group of products.

hispace application guides

double & single-sided frame basics

The Double and Single-Sided Height-Adjustable Bench begins with a universal frame which can be linked to additional double-sided frames. Each frame section accommodates two users.

- Table Base size is determined by the size of the worksurface it is used with
- Width (to work with worksurface width)
  - 12dm, 14dm, 15dm, 16dm, 18dm
- Switch:
  - Display with up/down memory
- Base Mechanism
  - Extended Range Electric-Extended Height (574mm - 1237mm)
- Frame finishes available:
  - Ebony
  - Very White

basics pages

Used to describe the details of each individual product including:
- Product codes
- Dimensions
- Options
- Features
- Links to the price page

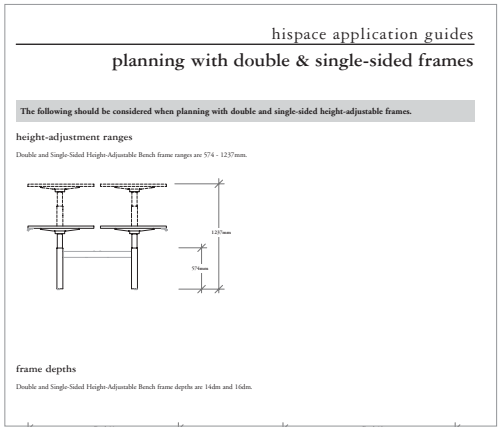
hispace application guides

planning with double & single-sided frames

The following should be considered when planning with double and single-sided height-adjustable frames.

height-adjustment ranges

Double and Single-Sided Height-Adjustable Bench frame ranges are 574 - 1237mm.

1237mm
574mm

frame depths

Double and Single-Sided Height-Adjustable Bench frame depths are 14dm and 16dm.

planning pages

Used to outline the rules and restrictions that should be considered when planning with products.

collision detection

collision detection

Collision Detection is a standard feature on all Double and Single-Sided Height-Adjustable benches. This system features a gyroscope based collision detection system that uses integrated sensors to detect when the table surface orientation is changed from default. This can occur when the table collides with an object in the up or down direction, or if the table is experiencing instability such as tipping in any direction. Once a detection is made, the table will stop, reverse direction, display an error code on the control panel, and temporarily lock out all adjustments.

hispace frames overview

- Linked stations create a benching environment that fully supports user sit/stand ranges, technology requirements and a high level of flexibility to create individual privacy
- Height-Adjustable Bench is made up of a simple kit of parts including a frame (double-sided, 120 or single-sided), worksurfaces, electrical components and screens that all must be specified separately

double-sided frame

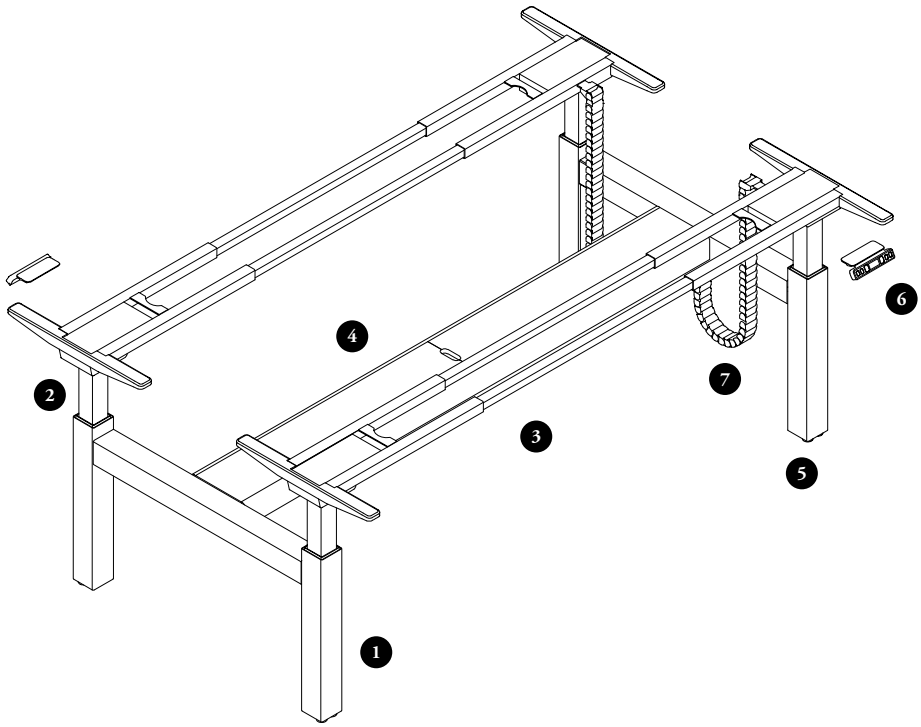

1. hiSpace Leg Column
2. Worksurface Strut
3. Telescopic Top Frame
4. Spine Tray
5. Leveler
6. Digital Switch
7. Vertical Wire Carrier (optional)

hispace frames overview (continued)

120 frame

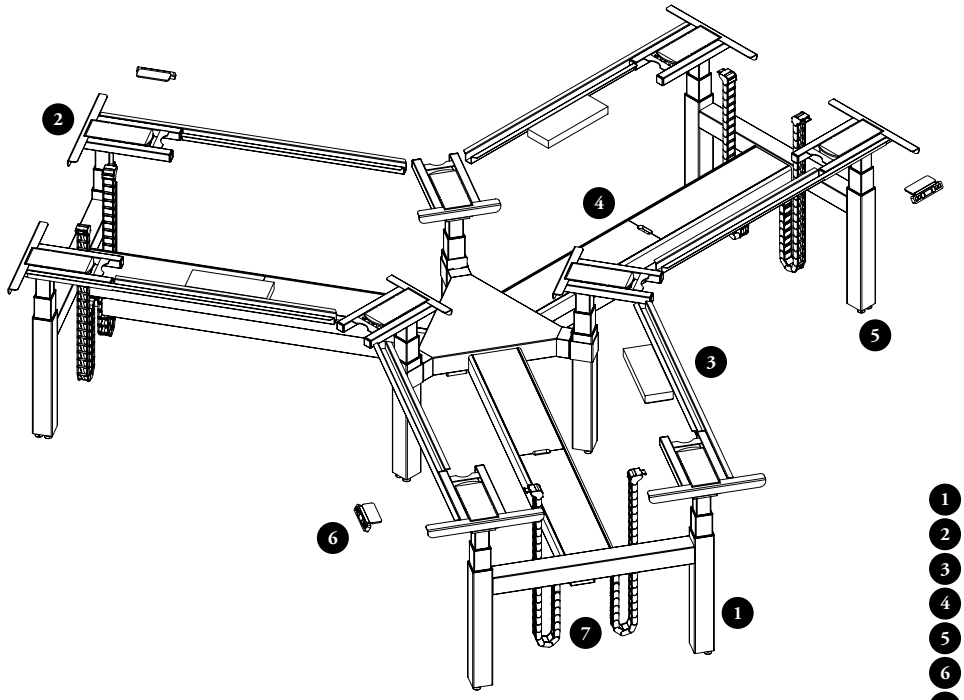

1. hiSpace Leg Column
2. Worksurface Strut
3. Top Frame
4. Spine Tray
5. Leveler
6. Digital Switch
7. Vertical Wire Carrier (optional)

hispace frames overview (continued)

single-sided frame

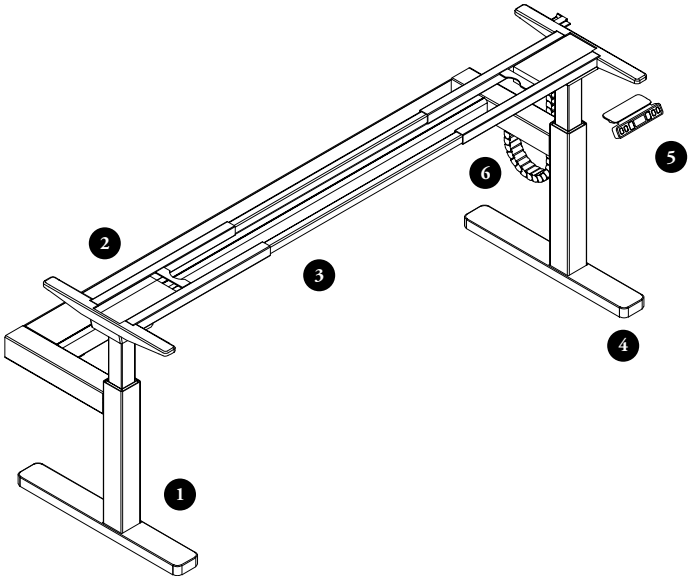

1. hiSpace Leg Column
2. Worksurface Strut
3. Telescopic Top Frame
4. Leveler
5. Digital Switch
6. Vertical Wire Carrier (optional)

hispace frame basics

The hiSpace Height-Adjustable Bench begins with a universal frame which can be linked to additional frames. Double-Sided frame sections accommodate two users, 120 frame sections accommodate three users and Single-Sided frames accommodate one user.

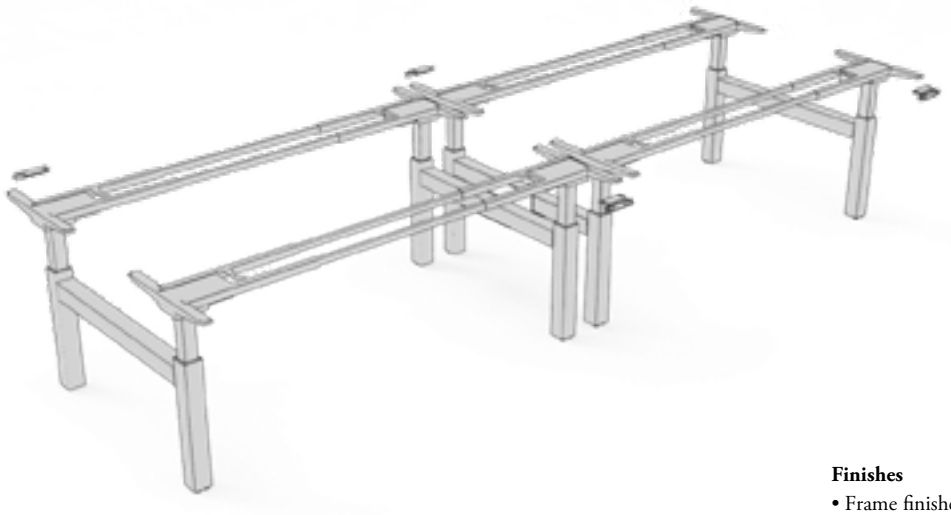

Finishes

- Frame finishes available:
  - Ebony
  - Very White

- Table Base size is determined by the size of the worksurface it is used with
- Width (to work with worksurface width)
  - 12 dm, 14 dm, 15 dm, 16 dm, 18 dm
- Switch:
  - Display with up/down memory
- Base Mechanism
  - Extended Range Electric-Extended Height (574 mm - 1237 mm)
  - Fixed Height (740 mm)

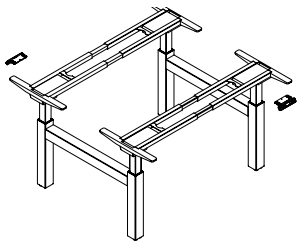

Double-Sided Frame (MHWBFYD)

- Depths (to work with worksurface depth)
  - 14 dm, 16 dm

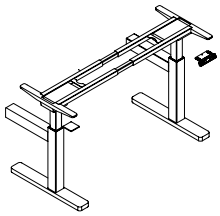

Single-Sided Frame (MHWBFYS)

- Depths (to work with worksurface depth)
  - 07 dm, 08 dm

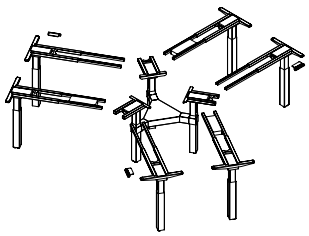

120 Frame (MHWBFYT)

- Depths (to work with worksurface depth)
  - 07 dm, 08 dm

planning with hispace frames

The following should be considered when planning with double and single-sided height-adjustable frames.

height-adjustment ranges

Double and Single-Sided Height-Adjustable Bench frame ranges are 574 mm - 1237 mm. The height for Fixed option is 740 mm.

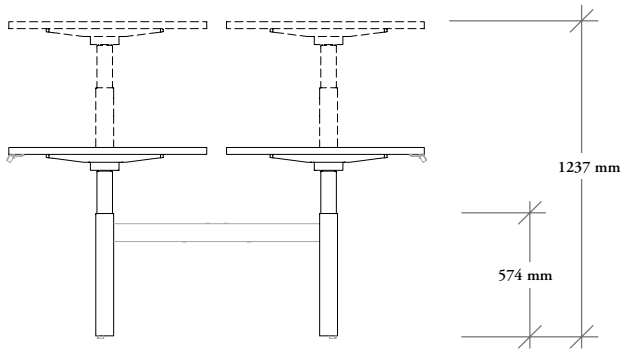

Height-Adjustable Range

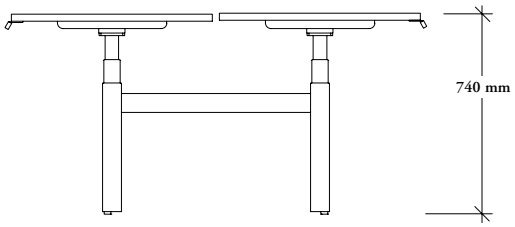

Fixed Height

frame depths

Double and Single-Sided Height-Adjustable Bench frame depths are 14 dm and 16 dm.

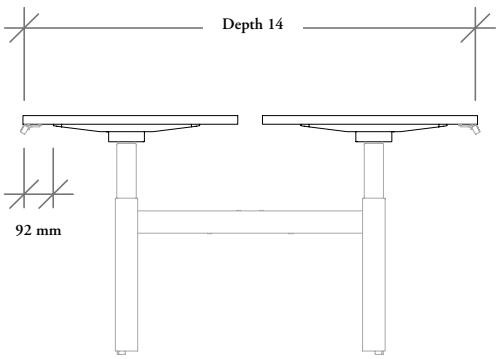

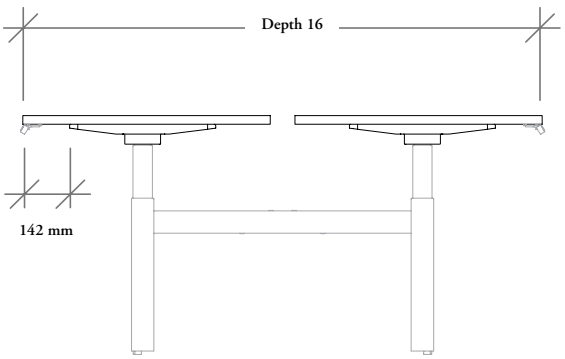

planning with hispace frames (continued)

frame widths

Double and Single-Sided Height-Adjustable Bench widths are nominal.
To calculate the user space between the legs of the frame, take the nominal width and - 2.48 dm

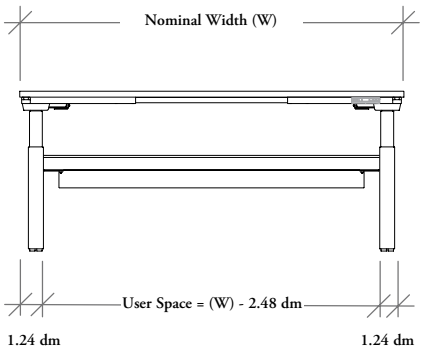

leveling

Double and Single-Sided benches allow for 50 mm of leveling. When more than 50 mm of leveling is required, a break in the bench run is necessary.
A site check prior to order is required to determine floor levels.

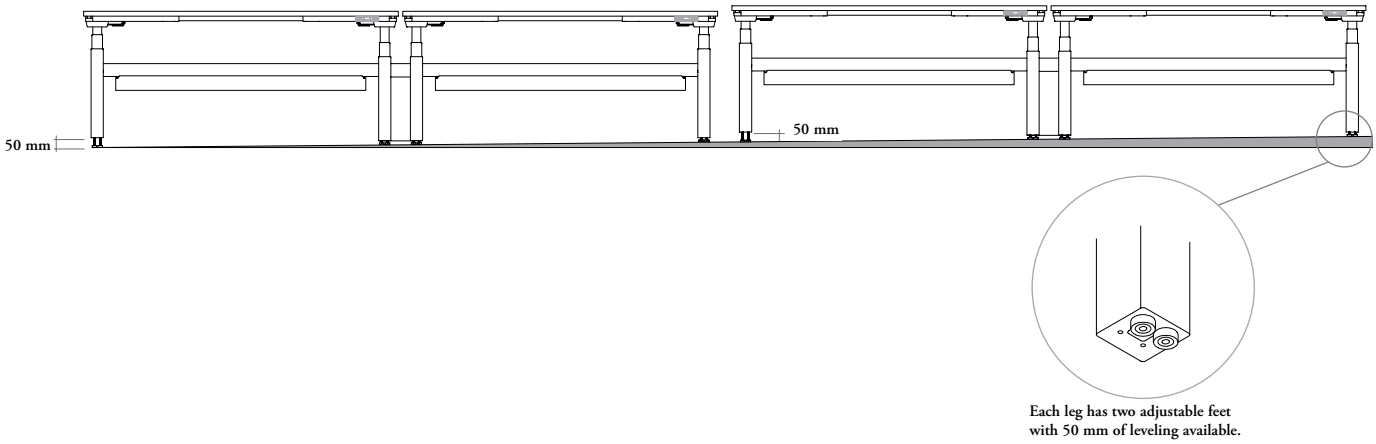

planning with hispace frames (continued)

height-adjustable vs. fixed height frames

Fixed-height columns can be used to cost-reduce a project, or to gradually phase-in height adjustability as needed.

Fixed-height columns are available as an option on all hiSpace frames:
- Double-Sided
- Single-Sided
- 120 HAB

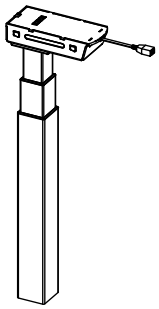

Height-Adjustable Leg

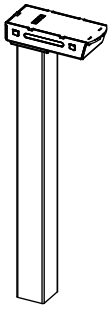

Fixed Height Leg

switches

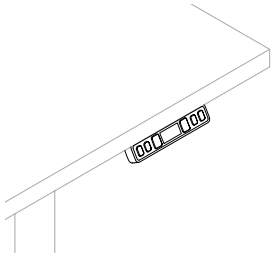

Digital Display Switch with Memory (D)

- Push buttons to move table up and down
- Digital display for height indication
- Three programmable memory settings
- Error Code Read-Out
- Switch Finish: Platinum Coordinate

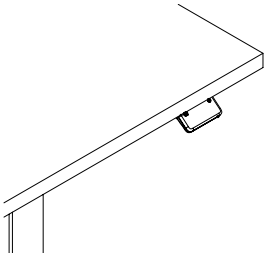

Toggle Display Switch with Memory (A)

- Up-Down Toggle for Intuitive Adjustment (lift switch or push down to move table up and down)
- Digital display for height indication
- Two programmable memory settings
- Switch Finish: Black

single-sided frame weldment cover basics

Frame Weldment Covers are used to cap off the back of the horizontal bar on a single-sided frame.

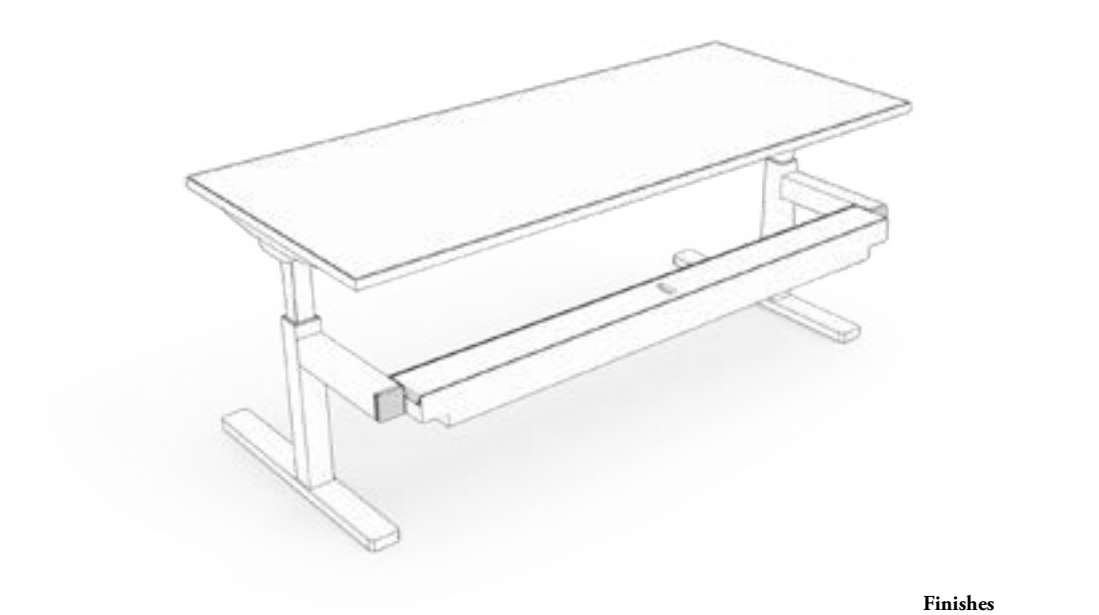

Finishes

- Finishes available:
  - Very White
  - Ebony

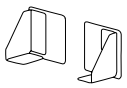

Single-Sided Frame Weldment Cover (MHWBFSC)

planning with single-sided frame weldment covers

The following should be considered when planning with the single-sided frame weldment covers.

Specify one set per workstation when there is no corridor screen.

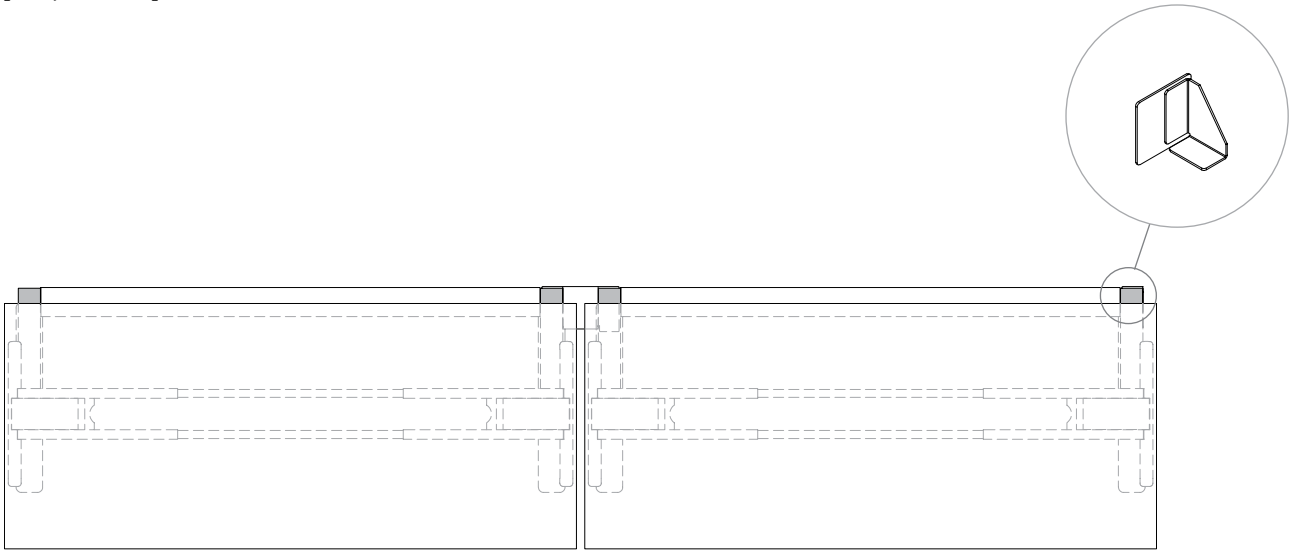

double & single-sided base link basics

Base Links tether double and single-sided height-adjustable frames to each other and ensure proper spacing.

Double-sided benches and single-sided benches cannot be linked together.

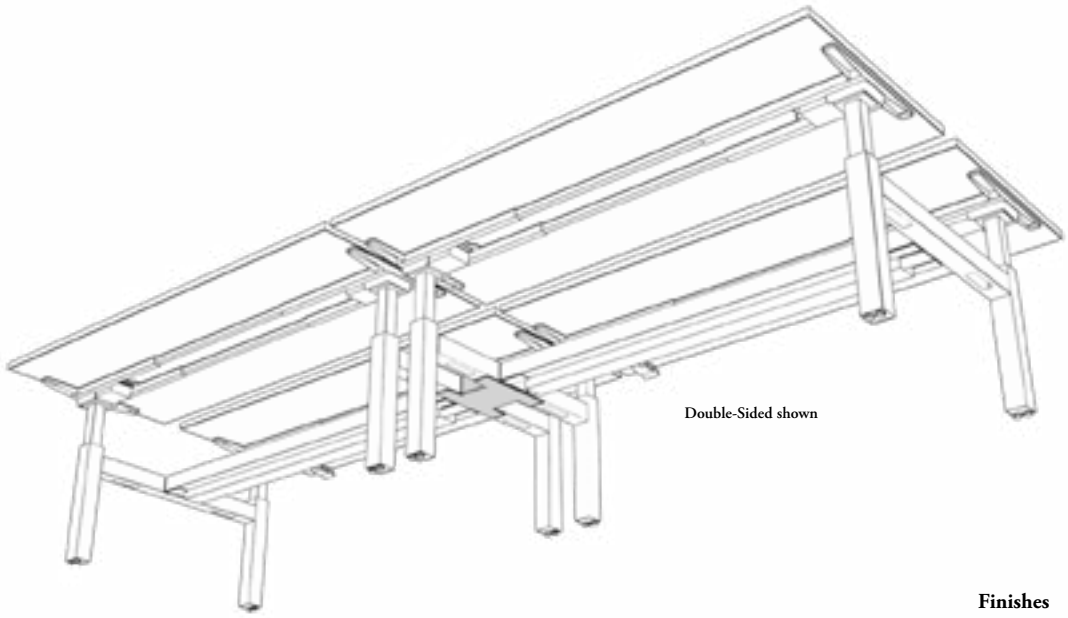

Double-Sided shown

Finishes
- Very White
- Ebony

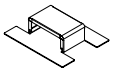

Double-Sided Base Link (MHWBFBD)

Single-Sided Base Link (MHWBFBS)

planning with double-sided base links

The following should be considered when planning with double-sided base links.

double-sided frames

Double-Sided Base Links must be specified when connecting more than one double sided frame together.

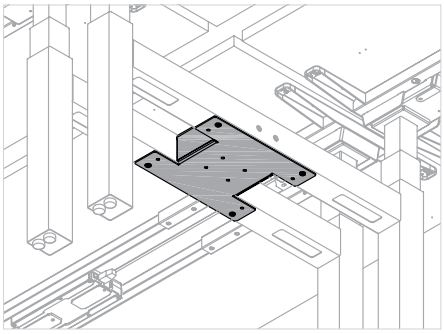

Base Link with no Spine Trays

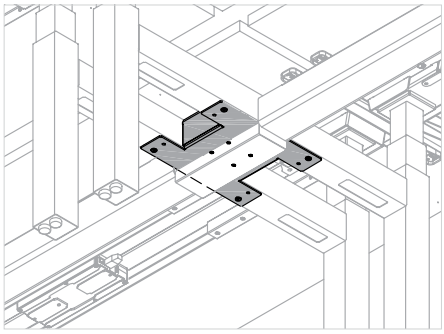

Base Link with Spine Trays

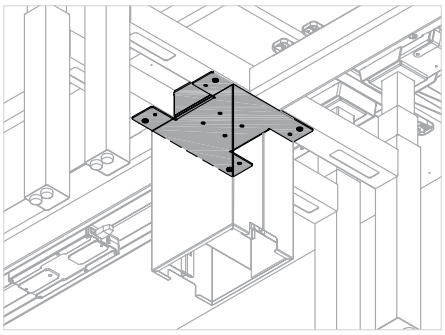

Base Link with Spine Trays and Cable Riser

planning with double-sided base links (continued)

linking double-sided frames

There is no limitation as to how many double-sided frames you can join side by side, as long as the leveling does not exceed 50 mm at a break in the bench and electrical requirements are maintained.

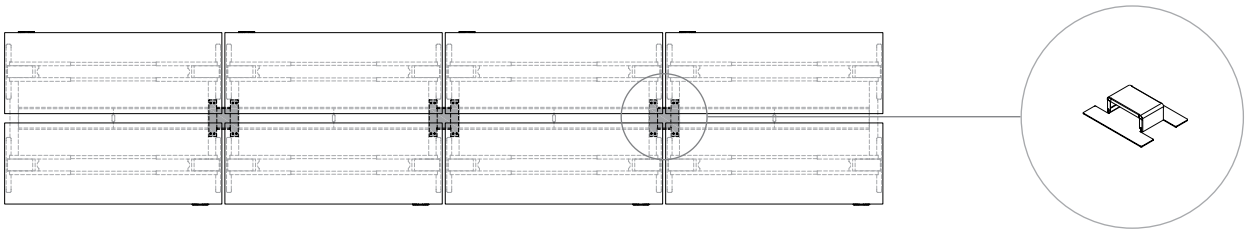

Double-Sided Base Link (MHWBFBD)

If longer runs are needed, smaller clusters can be parked beside each other without linking the bases.

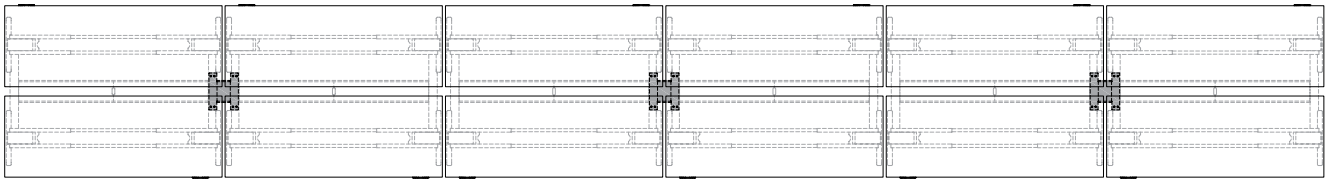

Split Split

planning with single-sided base links

The following should be considered when planning with single-sided base links.

single-sided frames

Single-Sided Base Links must be specified when connecting more than one single-sided frame together.

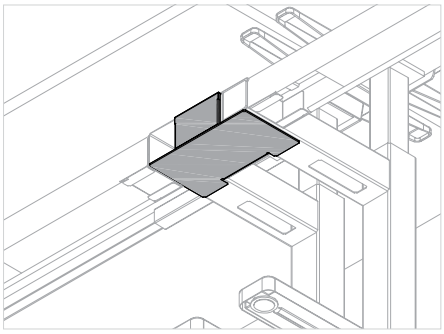

Base Link with no Spine Trays

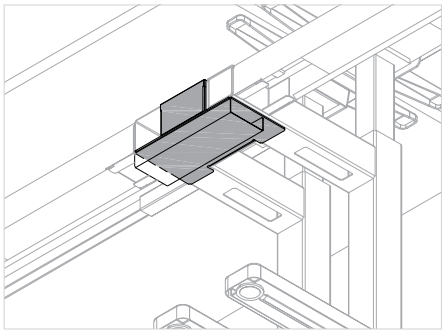

Base Link with Spine Trays

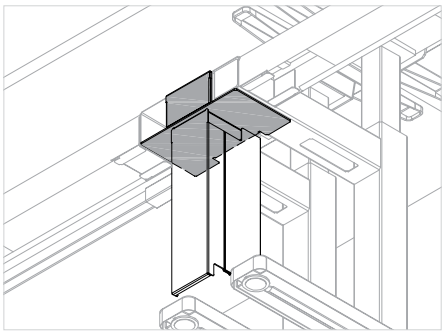

Base Link with Spine Trays and Cable Riser

planning with 120 base links

The 120 HAB Frame includes a 120 base link that ties the three center legs together and serves as support structure for spine trays and spine screens.

120 frames

Accessories and add-ons from the current Linear HAB catalogue should be specified when planning with 120 frames:
- Spine Trays
- Spine Screens
- Desk Edge Screens

Add-ons should match the nominal size of the frame.

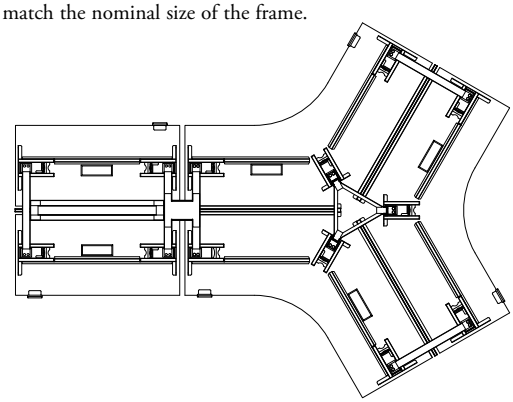

Frames can be linked together to create innovative workstation clusters.
Frame Links connect two frames side by side to allow power to continue between the frames and ensure accurate spacing.
Rectangular Double-Sided and 120 Frames can be connected to each other.

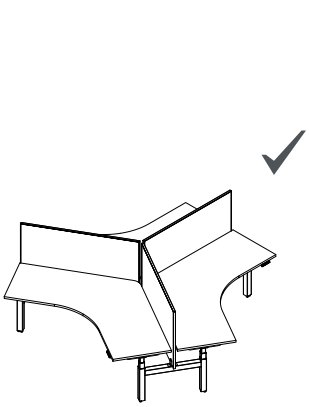

120 Frame - 3 Pack

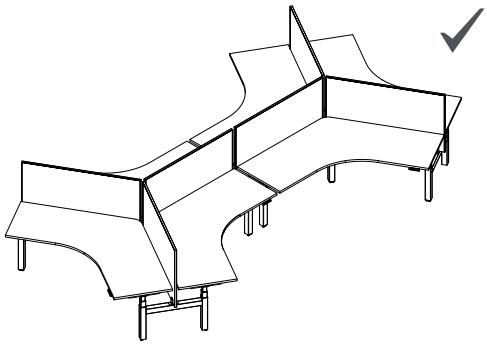

120 Frame - 6 Pack

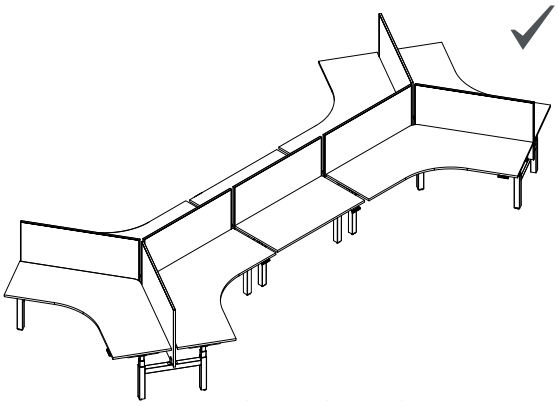

120 Frame + Linear Double-Sided HAB - 8 Pack

A single-sided run cannot be attached to a double-sided run.
Spine screens cannot be combined with desk edge screens.

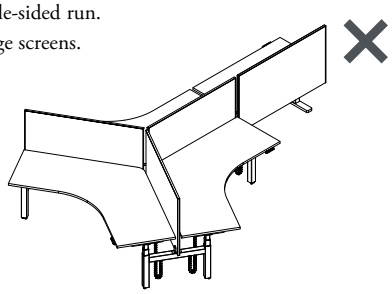

double & single-sided spine tray basics

Double and Single-Sided Spine trays serve as a raceway for power and data cables.

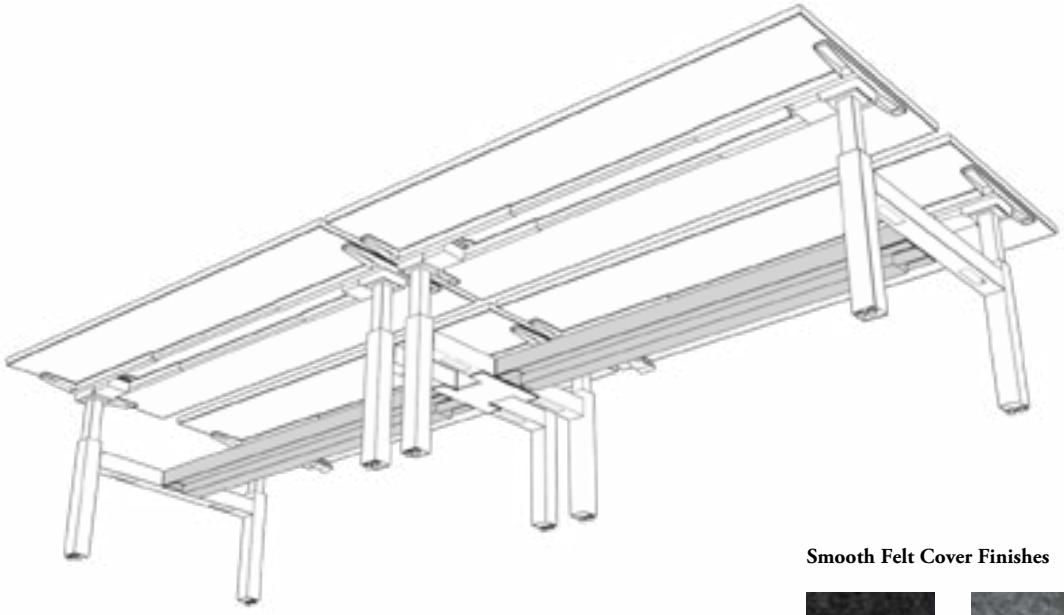

Smooth Felt Cover Finishes

Lunar

Pewter

- Widths:
  - 12 dm, 14 dm, 15 dm, 16 dm, 18 dm
- Finishes available:
  - Very White
  - Ebony

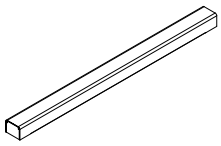

Double-Sided Spine Tray - Low Capacity (MHWBFTL)

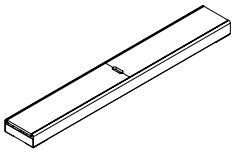

Double-Sided Spine Tray - Medium Capacity (MHWBFTM)

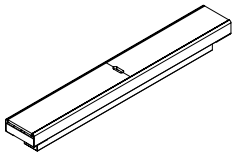

Double-Sided Spine Tray - High Capacity (MHWBFTH)

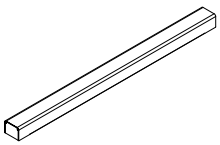

Single-Sided Spine Tray - Low Capacity (MHWBFSL)

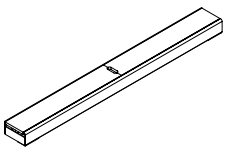

Single-Sided Spine Tray - Medium Capacity (MHWBFSM)

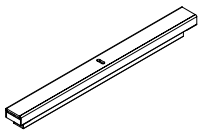

Single-Sided Spine Tray - High Capacity (MHWBFSH)

planning with double-sided spine trays

The following should be considered when planning with double and single-sided spine trays.

double-sided frames

There are three sizes of spine trays:
- Low Capacity
- Medium Capacity
- High Capacity

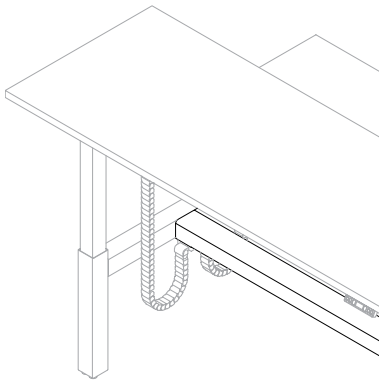

Low Capacity
• Accommodates data cables only

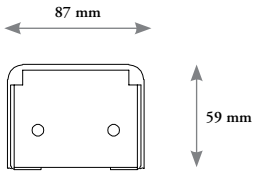

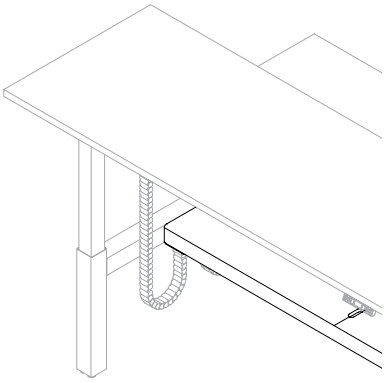

Medium Capacity
• Accommodates data and electric cables only

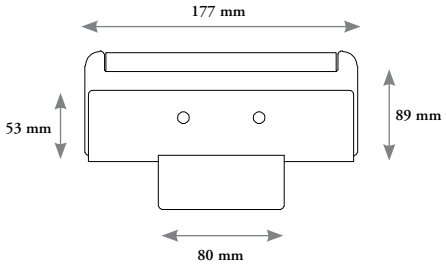

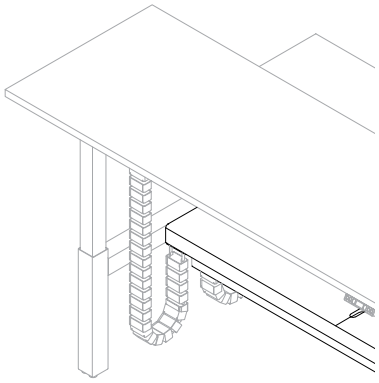

High Capacity
• Accommodates data and electric cables only

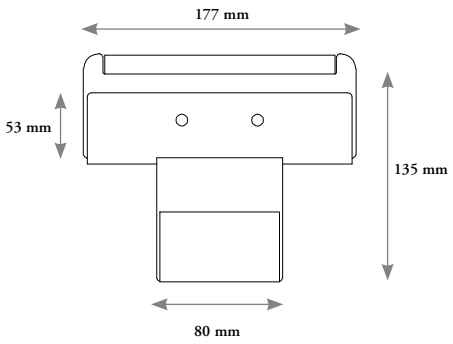

planning with single-sided spine trays

The following should be considered when planning with double and single-sided spine trays.

single-sided frames

There are three sizes of spine trays:
- Low Capacity
- Medium Capacity
- High Capacity

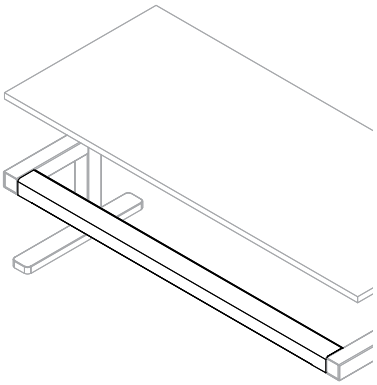

Low Capacity
- Accommodates data cables only

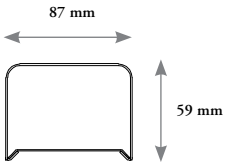

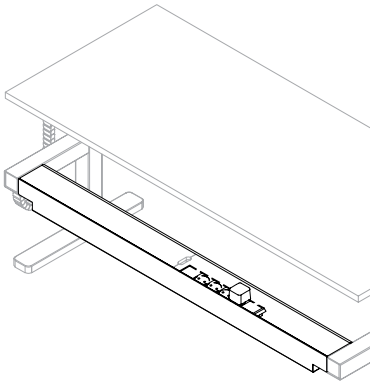

Medium Capacity
- Accommodates data and electric cables only

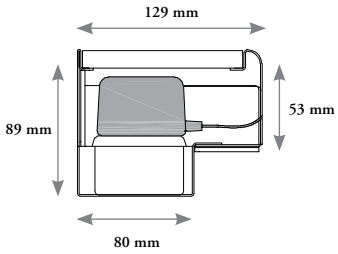

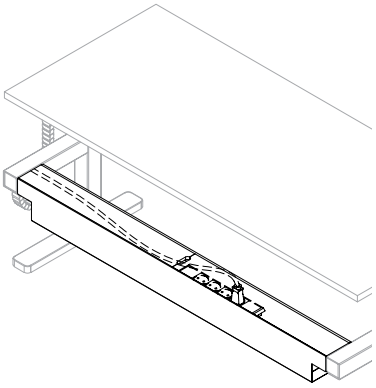

High Capacity
- Accommodates data and electric cables only

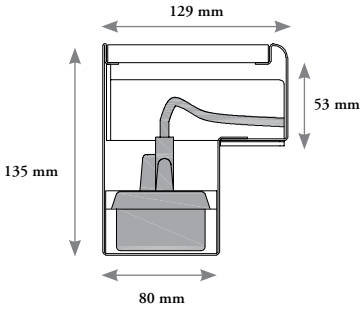

planning with single-sided spine trays (continued)

Apart from cable-carrying capacity there is also a difference in the functionality between the medium and high capacity spine trays:
- Only Medium and High Capacity spine trays include a felt cover to allow for easy accessibility to the power bars.
- Low Capacity spine trays carry a limited amount of power cords and do not accommodate power bars.

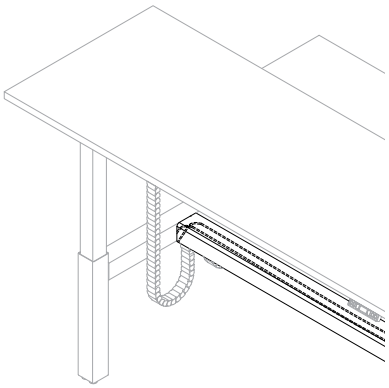

Low Capacity
- Low Capacity Spine trays only accommodate power cords

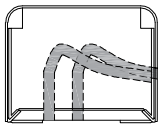

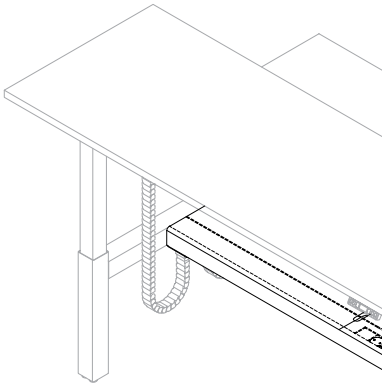

Medium Capacity
- Medium Capacity Spine trays are optimized for more horizontally-oriented plugs

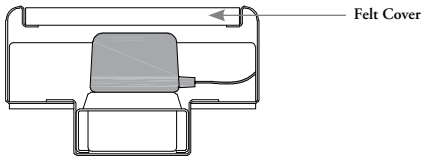

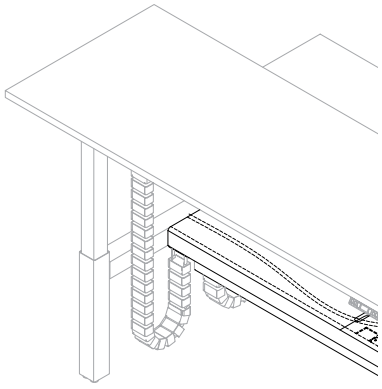

High Capacity
- High Capacity Spine trays are optimized for vertically-oriented plugs

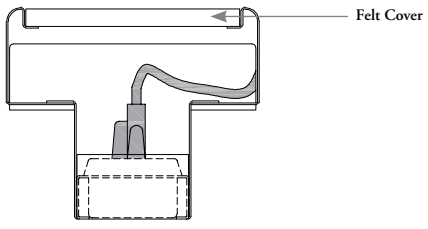

planning with single-sided spine trays (continued)

Power is routed up from the floor through an End Gable or Cable Riser to the Spine Tray. From the Spine Tray, the power is then directed up through an Vertical Wire Carrier to the worksurface. The Spine Tray capacity (Low, Medium or High) will depend on the amount and thickness of the power cords.

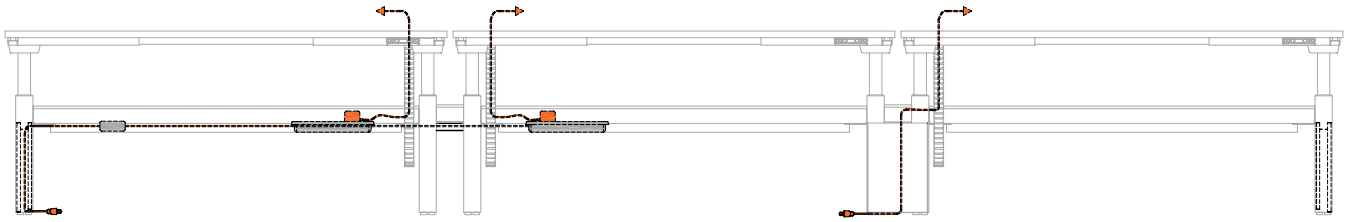

universal spine tray cover basics

The Universal Spine Tray Cover is secured by an integrated magnet and used to hide threaded inserts in the frame that are unused in certain configurations.

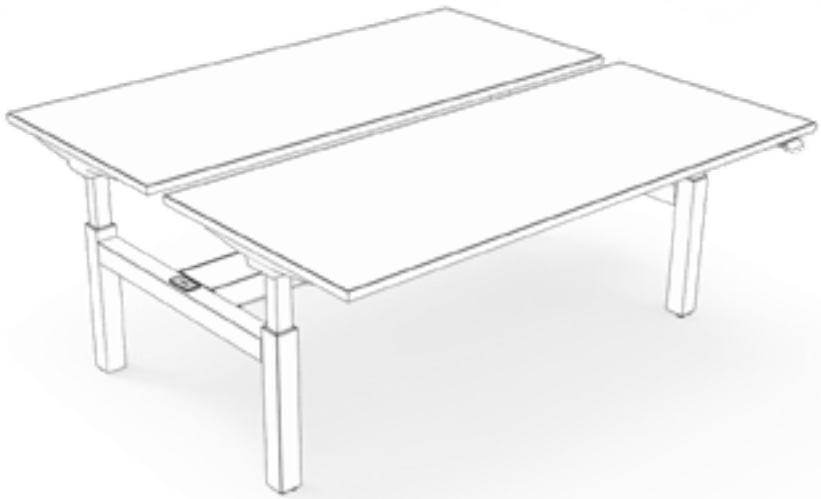

Finishes

- Finishes available:
  - Very White
  - Ebony

Universal Spine Tray Cover (MHWBFTV)

- Available in pairs

planning with universal spine tray covers

The following should be considered when planning with universal spine tray covers.

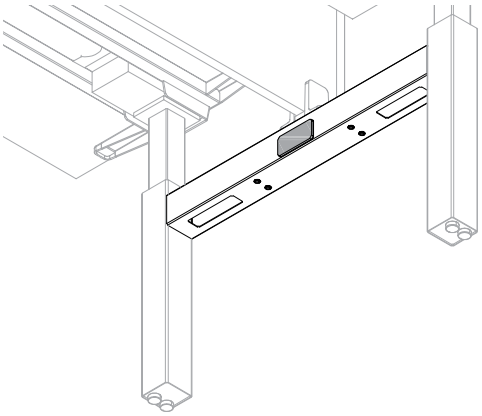

When no spine tray is specified, there will be inserts left exposed on each side of the frame.

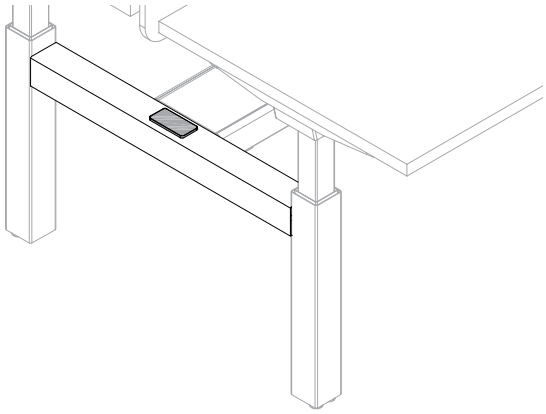

When there is no spine screen specified or if a desk edge infinity screen is specified, the inserts for the spine screen are exposed.

double & single-sided rectangular worksurface basics

Rectangular Worksurfaces are available with a gap to accommodate screens. Power accessibility is available through the worksurface to spine to accommodate screens and pinch clearances.

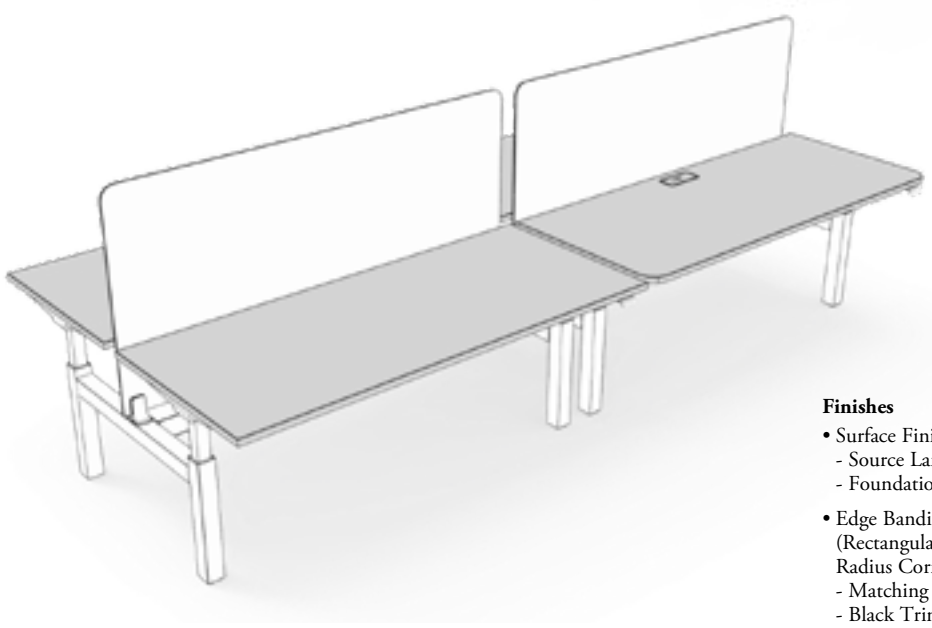

- Depths:
  - 07 dm, 08 dm
- Widths:
  - 12 dm, 14 dm, 15 dm, 16 dm, 18 dm
- Access Door Cut Out Size:
  - NN (None)
  - 04 dm
  - 06 dm

- Grommet Options:
  - No Grommet
  - Grommet Centre
  - Grommet Left
  - Grommet Right
  - Both Left and Right

Finishes

- Surface Finishes available:
  - Source Laminate
  - Foundation Laminate
- Edge Banding Finish: (Rectangular Worksurface with Radius Corners only)
  - Matching Trim
  - Black Trim
- Grommet Cap Finishes available:
  - Very White
  - Ebony
- Access Door Finish:
  - Metal
  - Accent

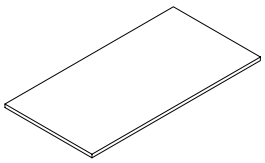

Double-Sided Rectangular Worksurface with Square Corners (MHWBWBD)

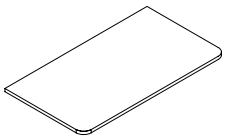

Double-Sided Rectangular Worksurface with Radius Corners (MHWBWJD)

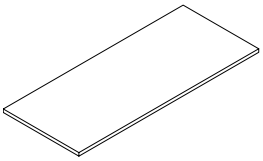

Single-Sided Rectangular Worksurface with Square Corners (MHWBWBS)

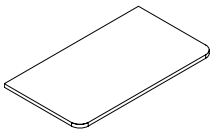

Single-Sided Rectangular Worksurface with Radius Corners (MHWBWJS)

hispace 120 worksurface basics

The hiSpace 120 worksurface is to be paired with the 120 frame to create a height-adjustable 120 bench station.

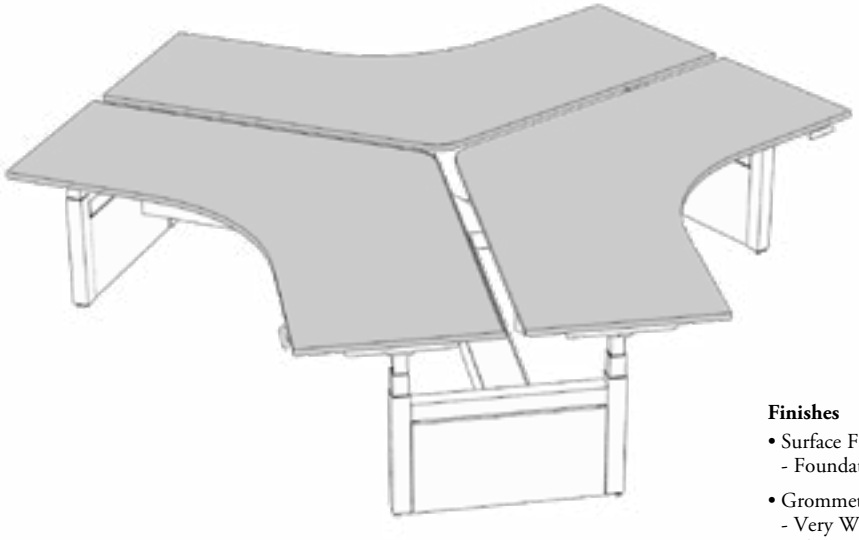

- Depths:
  - 07 dm, 08 dm
- Widths:
  - 12 dm, 14 dm, 15 dm
- Access Door Cut :
  - None
  - Left and Right Door Cut Out
  - Left Access Door Cut Out
  - Right Access Door Cut Out

- Grommet Cut Out Locations:
  - No Grommet
  - Center
  - Left
  - Right
  - Left and Right
  - Center, Left and Right

Finishes

- Surface Finishes available:
  - Foundation Laminate
- Grommet Cap Finishes available:
  - Very White
  - Ebony
- Access Door Finish:
  - Metal
  - Accent

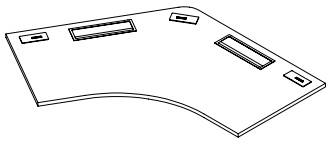

hiSpace 120 Worksurface with Square Corners (MHWBWBT)

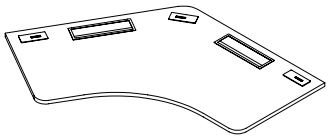

hiSpace 120 Worksurface with Radius Corners (MHWBWJT)

planning with double & single-sided rectangular worksurfaces

The following should be considered when planning with Double and Single-Sided Height-Adjustable Bench Rectangular worksurfaces.

When specifying worksurfaces for a Double-Sided Bench, two worksurfaces per workstation must be specified:
- Frame Depth (14) must be paired with Worksurface Depth (07)
- Frame Depth (16) must be paired with Worksurface Depth (08)

Double-Sided Rectangular Worksurface with Square Corners

Double-Sided Rectangular Worksurface with Radius Corners

planning with double & single-sided rectangular worksurfaces (continued)

depths and widths

Worksurface depths and widths are nominal.

Depths

• Medium Capacity Spine trays are optimized for more horizontally-oriented plugs

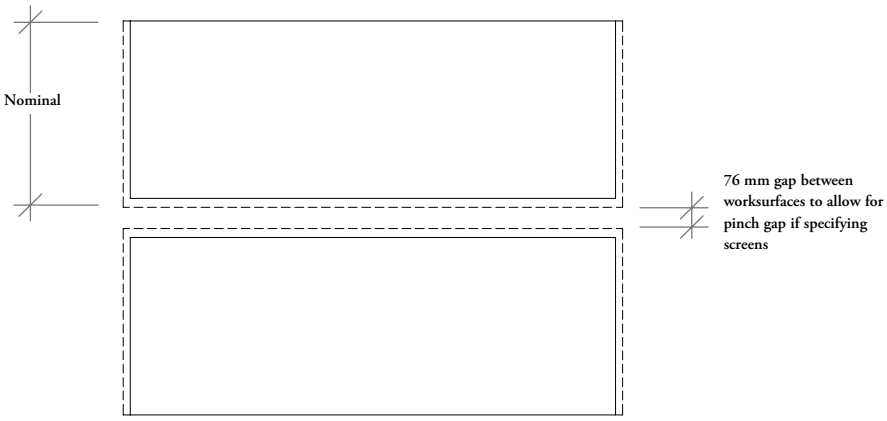

Widths

All worksurfaces must have 25 mm clearance around the sides for a pinch gap.

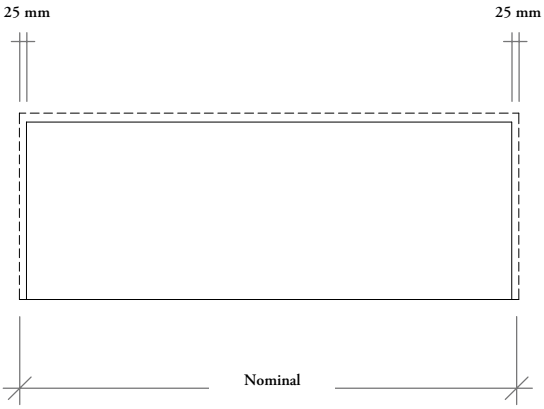

planning with double & single-sided rectangular worksurfaces (continued)

grommets

- Grommet cut out options:
  - None
  - Centre
  - Left
  - Right
  - Both Left & Right

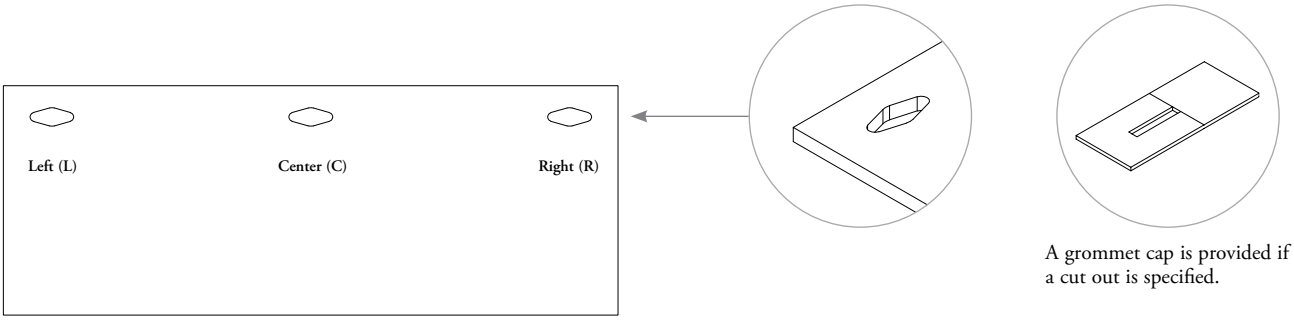

A grommet cap is provided if a cut out is specified.

access doors

- Access door options:
  - None
  - Centered
- There are two sizes of access doors
  - 04 dm
  - 06 dm
- When specifying 1200 mm wide worksurface, only the 400 mm Access Door is applicable

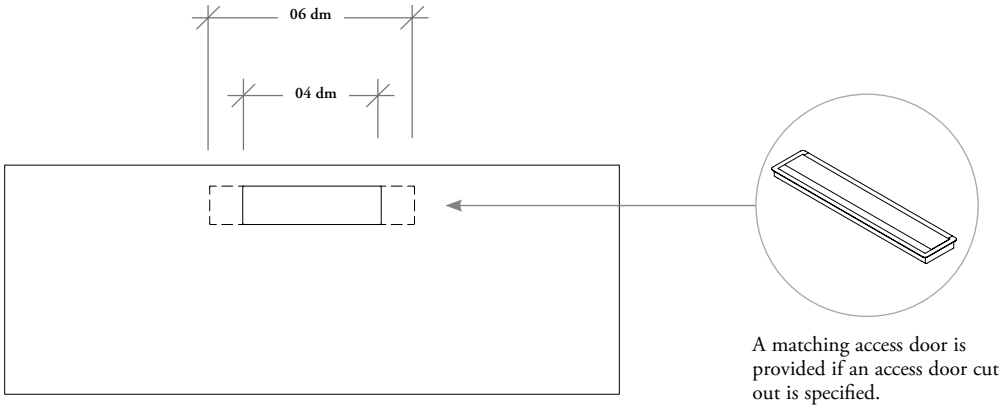

A matching access door is provided if an access door cut out is specified.

planning with 120 worksurfaces

grommet cut out locations for 120 worksurfaces

• Grommet cut out locations:
- None
- Center
- Left
- Right
- Left & Right
- Center, Left & Right

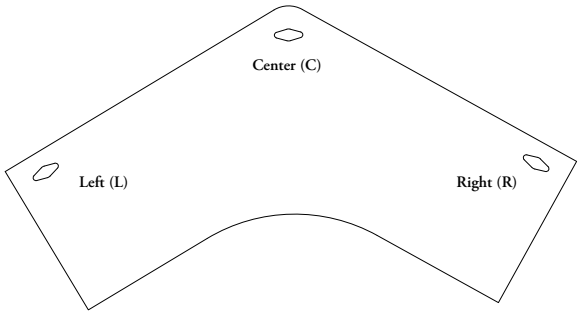

access door cut out for 120 worksurfaces

• Access Door options:
- None
- Left Access Door
- Right Access Door
- Left & Right Access Door

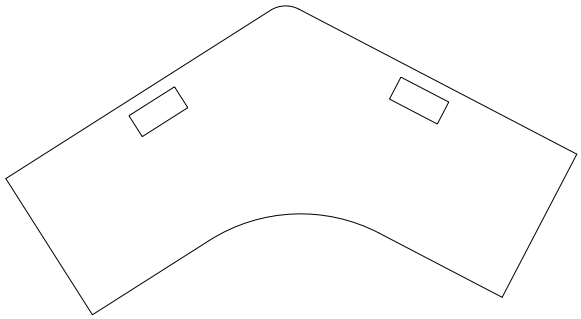

under worksurface cable tray basics

Under Worksurface Cable Trays provide housing for an under worksurface power option that is accessible through the access door cut out. The tray also provides a storage area for cables if no plug box is specified.

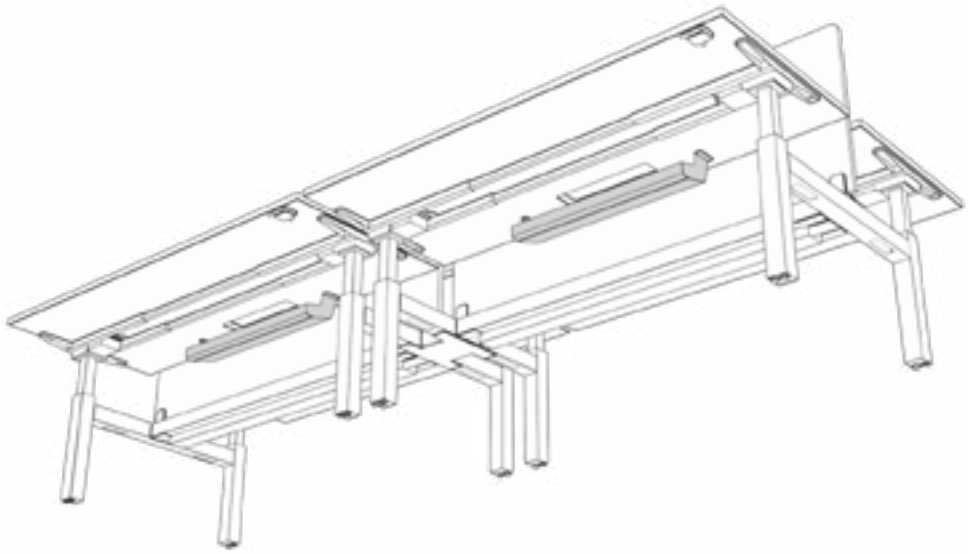

Finishes

- Finish available:
  - Very White
  - Ebony

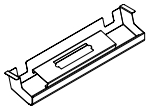

Under Worksurface Cable Tray (MHWBEUY)

- Size available:
  - 04 dm, 06 dm
- Plug Mount:
  - None
  - Hard Wire 4-Gang
  - Powerbox 4-Gang (specified separately)

planning with under worksurface cable trays

The following should be considered when planning with under worksurface cable tray.

double-sided

When specifying an access door cut out, you must specify an under worksurface cable tray. All three types of cable trays will work with both size of access door cut outs (04 dm and 06 dm).

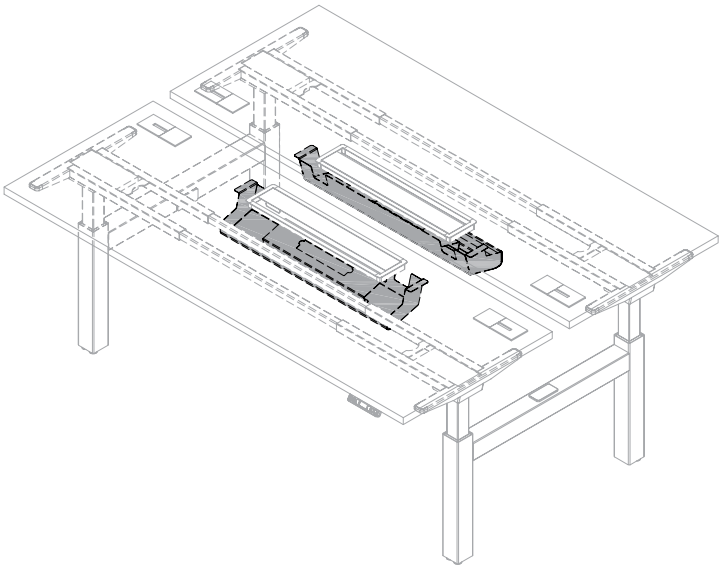

There are three under worksurface plug mount options available:

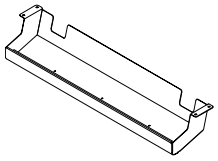

None

If no electrics are specified, the Cable Tray acts as a place to store power cables.

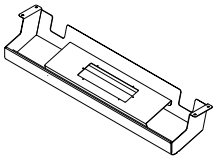

Hard Wire 4-Gang

Mounting of this option is for hard wired electrics which must be done by an electrician.

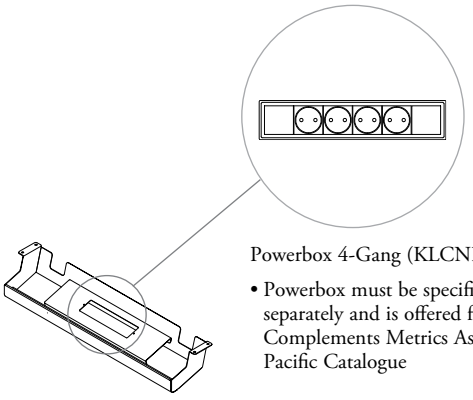

Powerbox 4-Gang (KLCNB4)

- Powerbox must be specified separately and is offered from Complements Metrics Asia Pacific Catalogue

Powerbox 4-Gang

This option includes a mounting plate that will accommodates a Powerbox.

planning with under worksurface cable trays (continued)

single-sided

Only the Single-Sided Low Capacity Spine Tray can be specified when planning with the Under Worksurface Cable Tray.

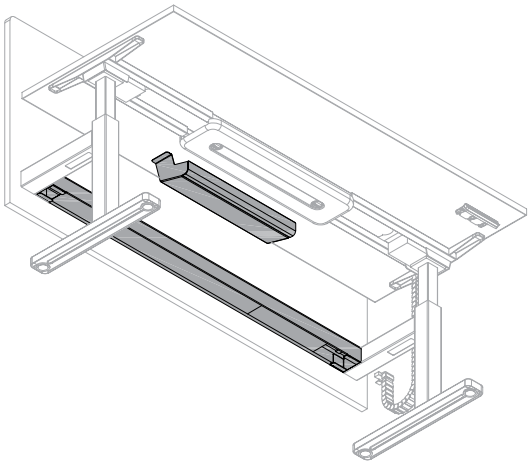

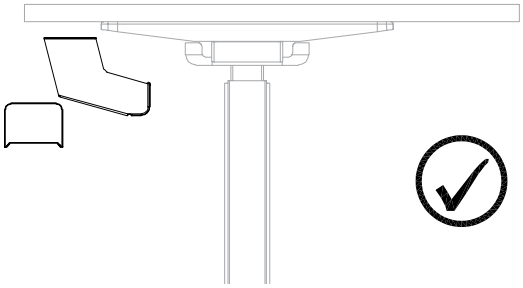

On Single-Sided Height-Adjustable Bench, the 1" pinch gap between spine tray and the Under Worksurface Cable Tray can only be achieved by using a low-capacity spine tray.

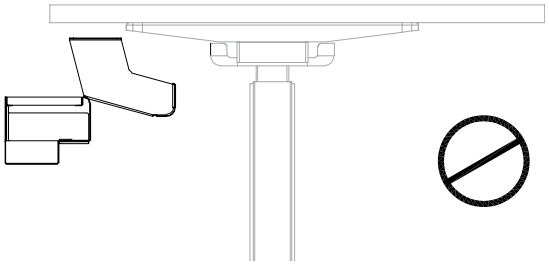

Both 4-Gang under worksurface trays cannot be used with a medium or high capacity spine tray as they will collide at the lowest worksurface height.

power bar holder for spine tray basics

Power Bar Holders secure power bars within medium and high capacity spine trays.

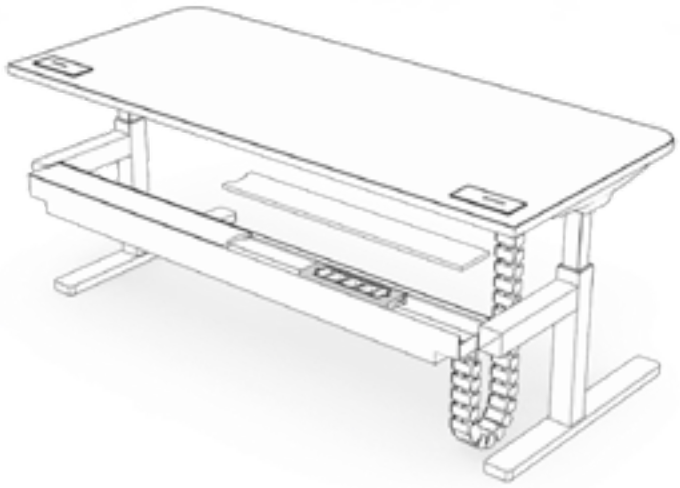

Finishes

- Finishes available:
  - Very White
  - Ebony

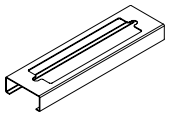

Power Bar Holder for Spine Trays (MHWBETP)

- Plug Mount:
  - None
  - Hard Wire 4-Gang
  - Powerbox 4-Gang (specified separately)

cable riser basics

Double and Single-Sided Cable Risers are used to feed power into the bench system.

- Cable Risers are used to feed power into the bench system. It includes a plug box holder, when specified. Plug boxes are sold separately
- Can be used with or without spine tray

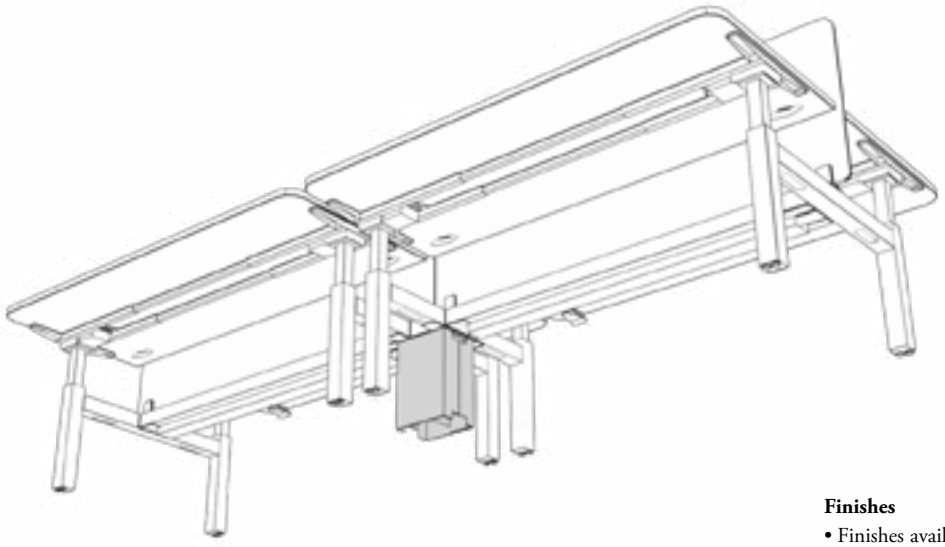

Finishes

- Finishes available:
  - Very White
  - Ebony

Double-Sided Cable Riser (MHWBECD)

- Plug Box Options available:
  - None
  - Hard Wire 3-Gang
  - Powerbox 3-Gang (two power, one blanking)

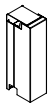

Single-Sided Cable Riser – Mid (MHWBECM)

- Plug Box Options available:
  - None
  - Hard Wire 3-Gang
  - Powerbox 3-Gang (two power, one blanking)

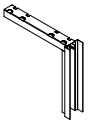

Single-Sided Cable Riser – End (MHWBECE)

- Depths:
  - 07 dm, 08 dm

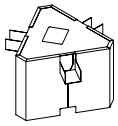

hiSpace 120 Cable Riser - Mid (MHWBECMT)

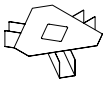

hiSpace 120 Wire Bridge (MHWBEWT)

planning with double-sided cable riser

The following should be considered when planning with Double-Sided Cable Risers.

- Double-Sided Cable Risers attach to the Double-Sided Frame and will allow for the main power source to route from the floor to the workstation
- A holder is specified if a plug box is specified. Plug box must be specified separately
- The Double-Sided Cable Riser can be used with or without a spine tray

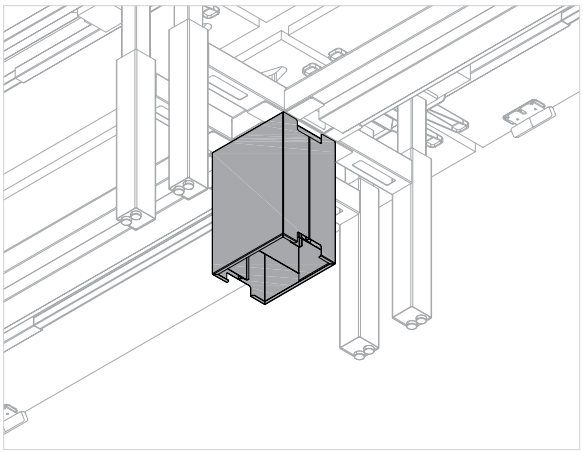

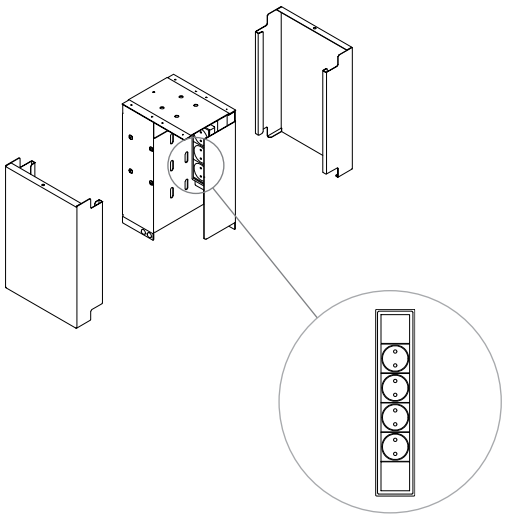

Powerbox 4-Gang (KLCNB4)

- Powerbox must be specified separately and is offered from Complements Metrics Asia Pacific Catalogue

planning with single-sided cable riser – mid

The following should be considered when planning with Single-Sided Cable Risers – Mid.

Single-Sided Cable Riser – Mid attaches to the Single-Sided Frame and allows for the main power source to route from the floor to the workstations.

Can be used with or without a spine tray.

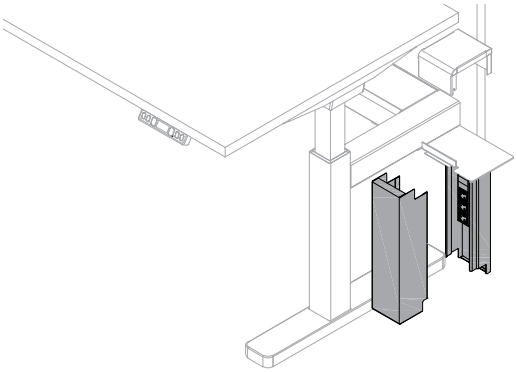

With Spine Tray

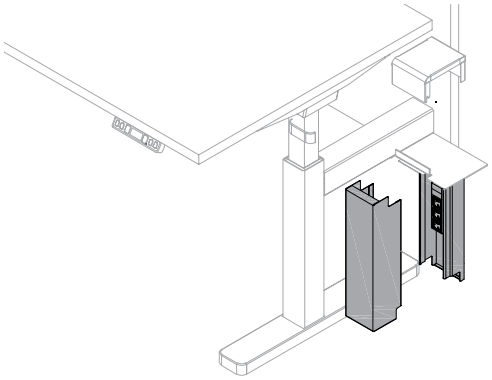

Without Spine Tray

planning with single-sided cable riser – end

Single-Sided Cable Riser - End allows cables to feed into a single-sided system from either end of the bench.

Cable Riser attached to the Cable Tray to allow power to be routed from the floor.

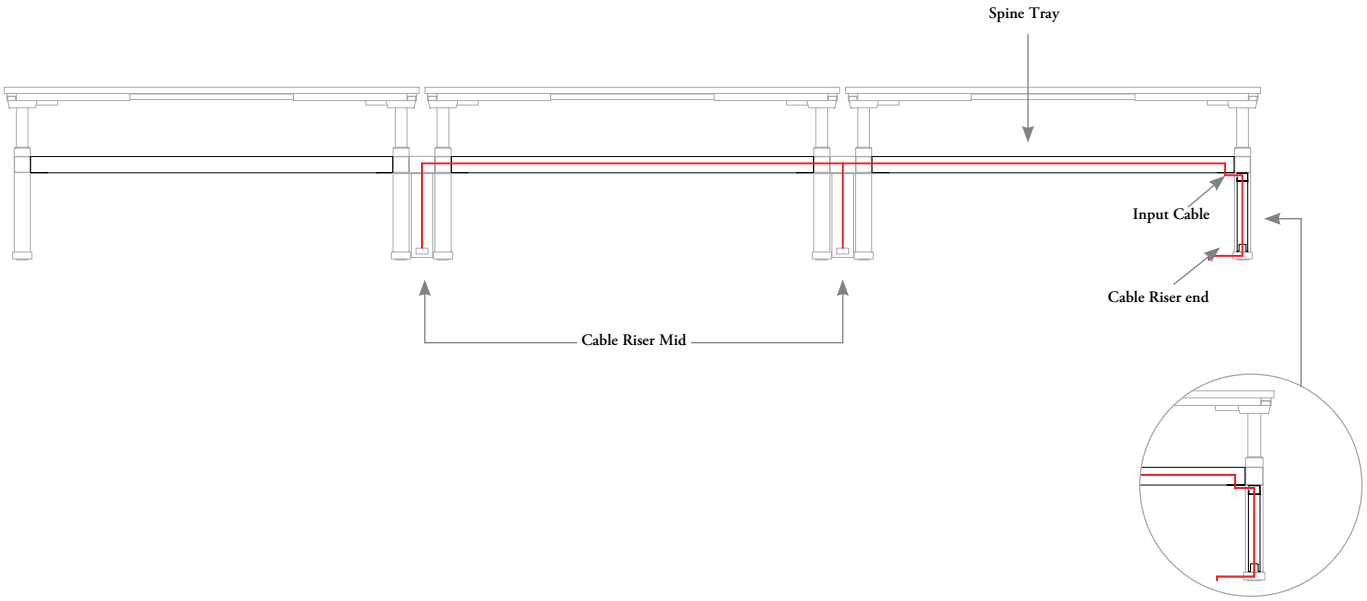

hispace planning with 120 cable riser

The following should be considered when planning with 120 Cable Risers.

120 Cable Riser

The base link for 120 HAB is already included in the frame. It is fastened to the underside of the integrated 120 base link that is part of the frame.

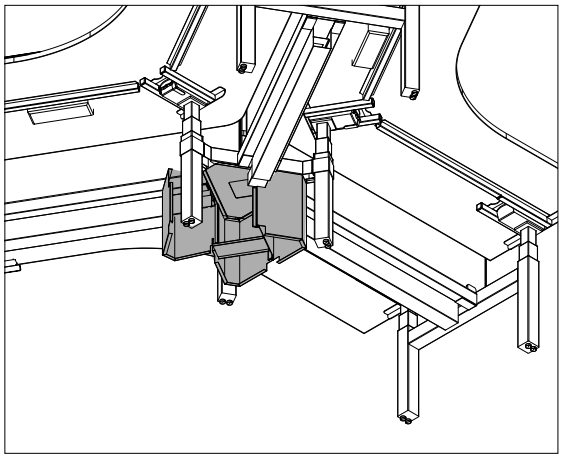

Three types of base feed can be hosted within the 120 mid-cable riser:
- Standard Base Feed
- Split Base Feed
- Chicago Base Feed

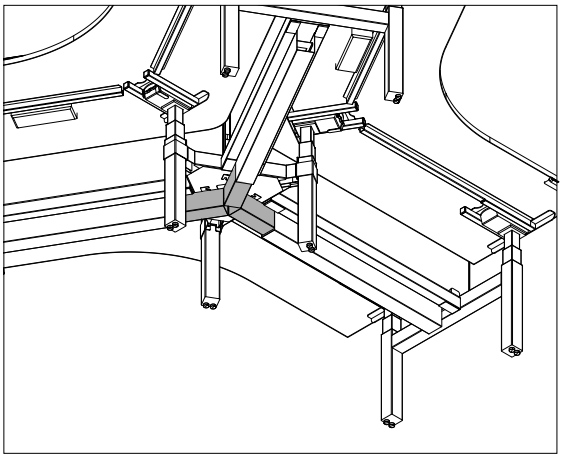

When feeding power through the central column is not required, a 120 wire bridge can be specified to facilitate cable travel across the three spine trays.

hispace planning with 120 cable riser (continued)

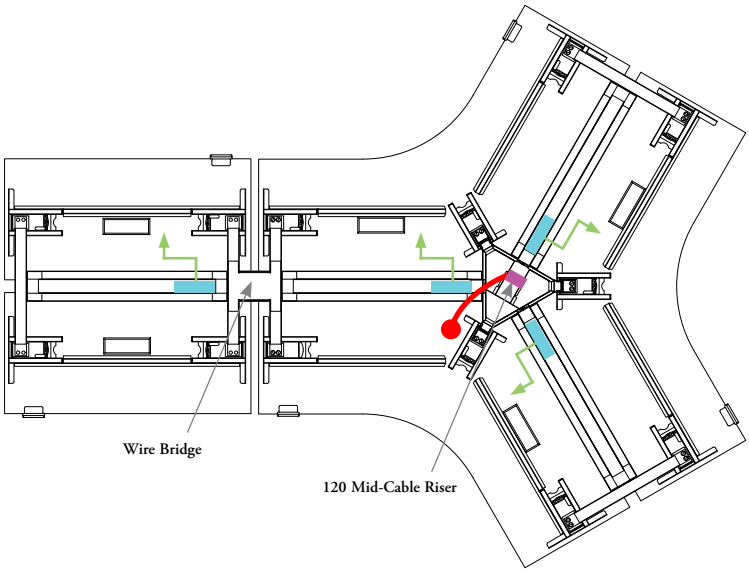

Wiring with mid cable riser entry

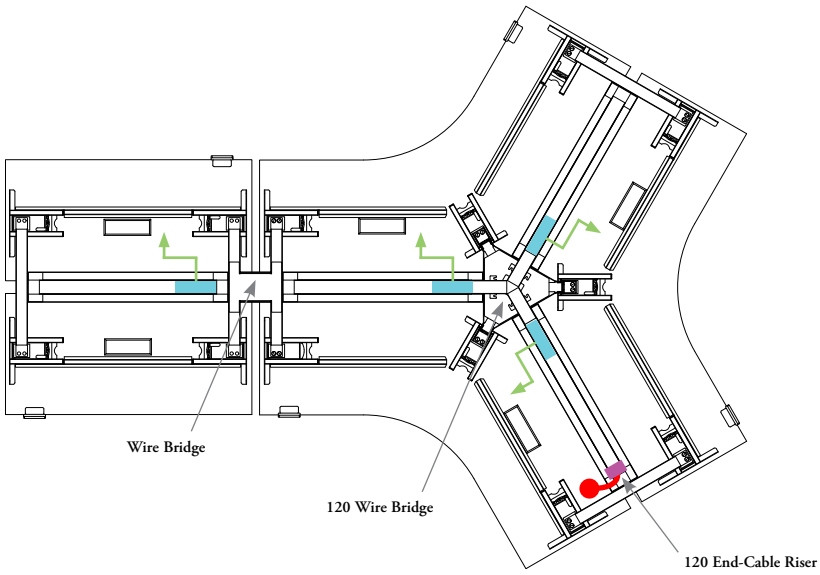

Wiring with end cable riser entry

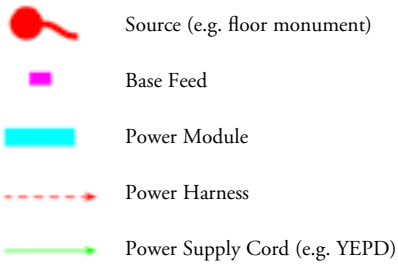

end gable basics

End Gables provide a more enclosed tailored look to the height-adjustable bench frame.

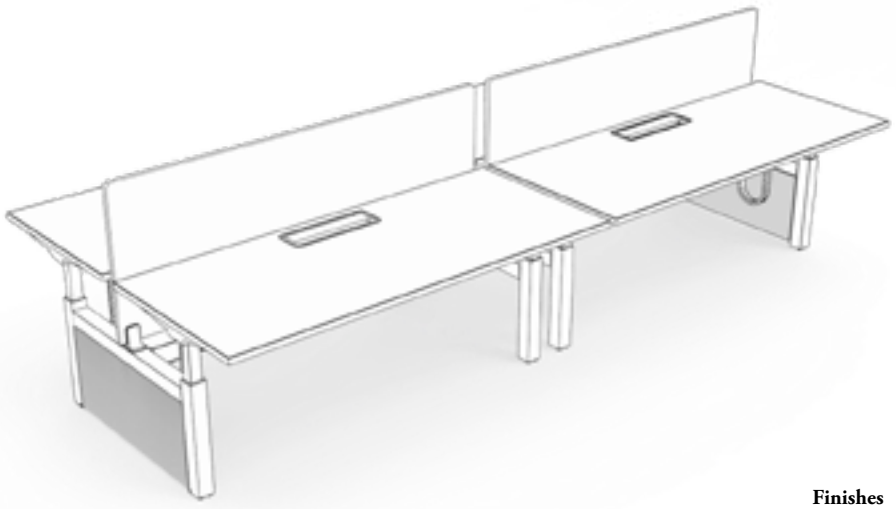

Finishes

- Outer Finish Options:
  - Metal (Very White or Ebony)
  - Laminate (Source Laminates or Foundation Laminates)
  - Smooth Felt (Lunar or Pewter)
- Inner Finish Options:
  - Very White
  - Ebony

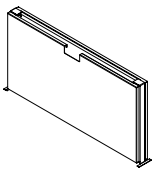

End Gable (MHWBCGE)

- Depths available:
  - 14 dm and 16 dm
- Cable Exit Option:
  - Yes or No

planning with end gables

The following should be considered when planning with end gables.

End Gables provide two solutions:
- Closes the ends of the each bench run for a finished look
- Routes power from the floor or wall up and into the spine tray

If the cable pass-through option is specified on the end gable, there will be a cut out in the top of the end gable to allow for the cable to pass through to spine tray.

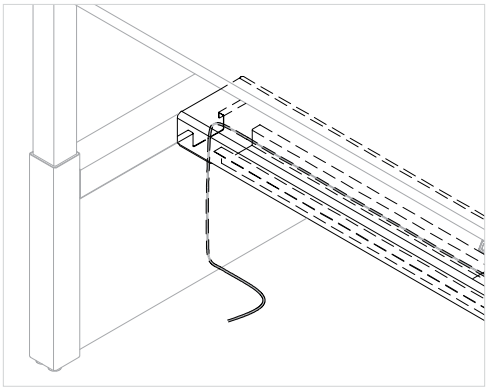

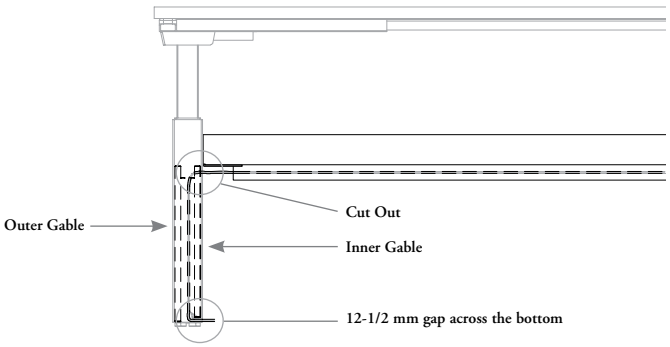

vertical wire carrier basics

Vertical Wire Carrier serve as a raceway for power and data cables to run from spine trays to worksurfaces.

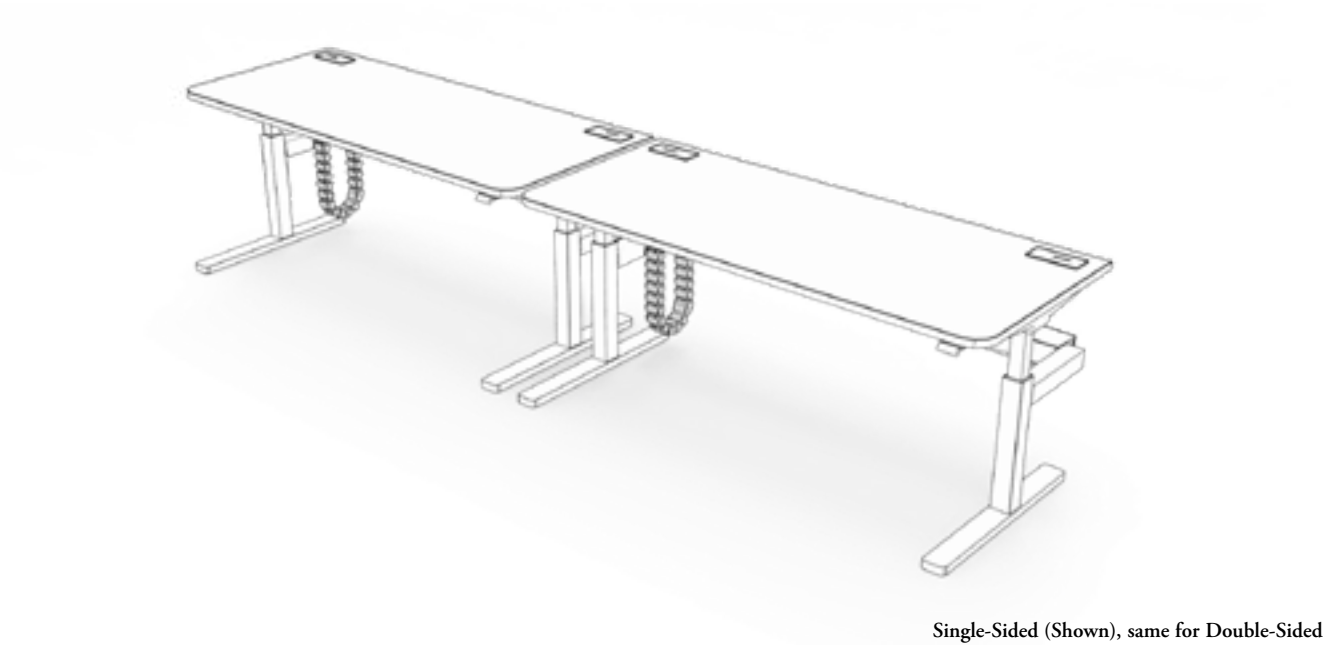

Single-Sided (Shown), same for Double-Sided

Finishes

- Finish Options:
  - Very White
  - Ebony

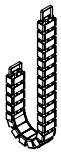

Vertical Wire Carrier (MHWBEEE)

- Style available:
  - Standard Capacity - Perpendicular
  - High Capacity - Perpendicular

planning with vertical wire carrier

The following should be considered when planning with Vertical Wire Carrier Cables.

There are two sizes of Vertical Wire Carriers that will accept different volumes of cables:
- Standard Capacity
- High Capacity

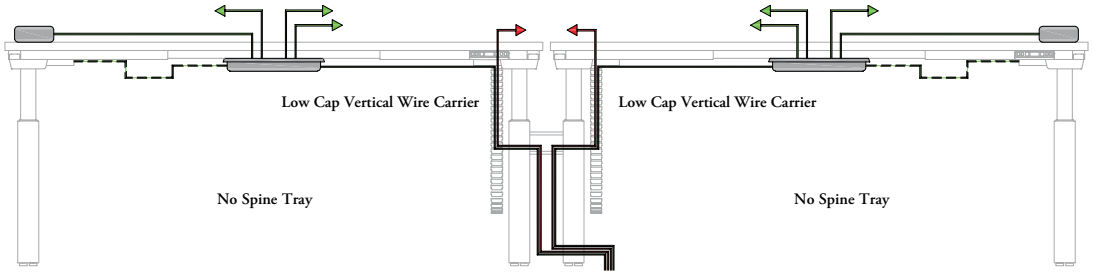

It is recommended that when electrics are routing directly to the worksurface from floor, the standard capacity Vertical Wire Carrier should be specified.

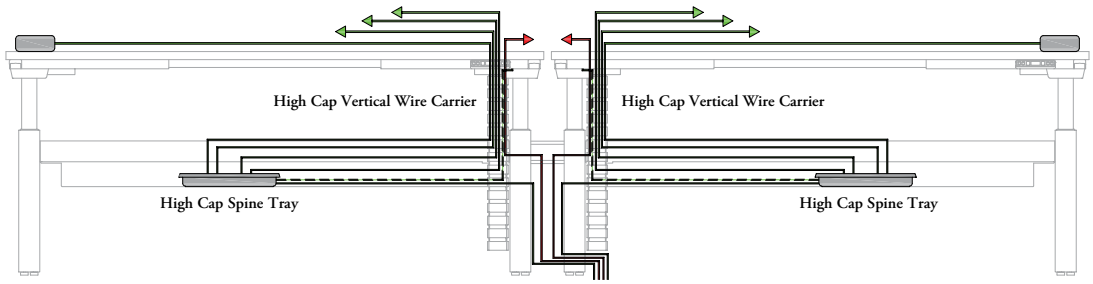

When a there is a Spine Tray, there will be more cabling and the high capacity Vertical Wire Carrier should then be specified.

vertical wire carrier bracket & cover basics

Vertical Wire Carrier Bracket and Cover Kit may be specified for docking the Vertical Wire Carrier onto the base when there are no Spine Trays.

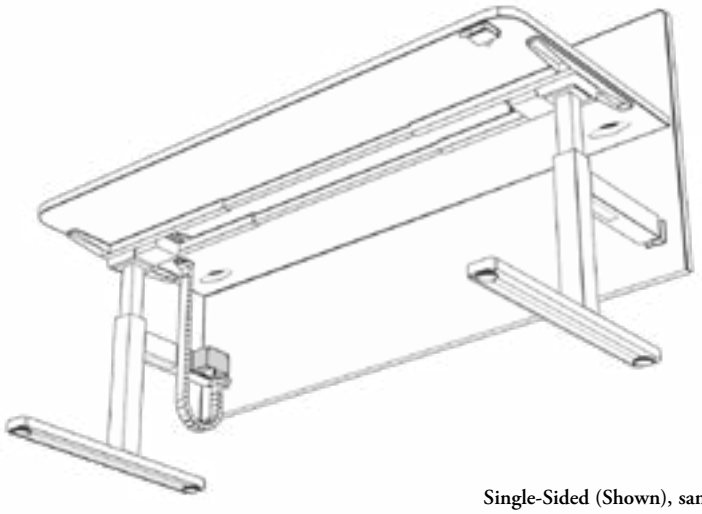

Single-Sided (Shown), same for Double-Sided

Finishes

- Finish Options:
  - Very White
  - Ebony

Vertical Wire Carrier Bracket & Cover (MHWBEEB)

felt cable cover organizer basics

The Felt Cover Cable Organizer acts to hide the bench's electrics control box and associated wiring.

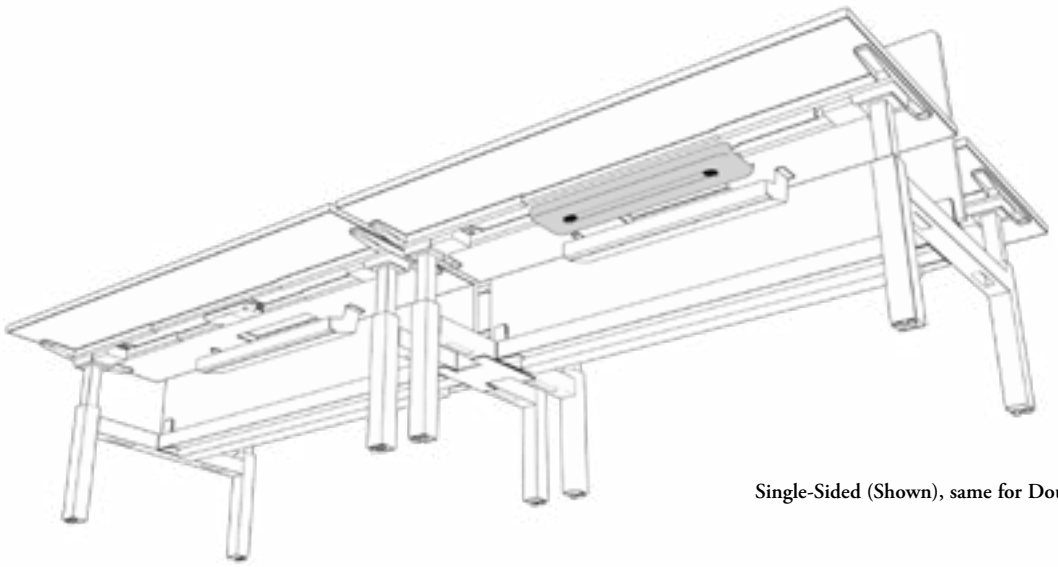

Single-Sided (Shown), same for Double-Sided

Finishes

- Finish Options:
  - Very White
  - Ebony

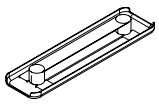

Felt Cable Cover Organizer (MHWBEWY)

wire bridge basics

Wire Bridges are used to pass cables between two height-adjustable bench frames, specifically when there is no cable riser required at the junction.

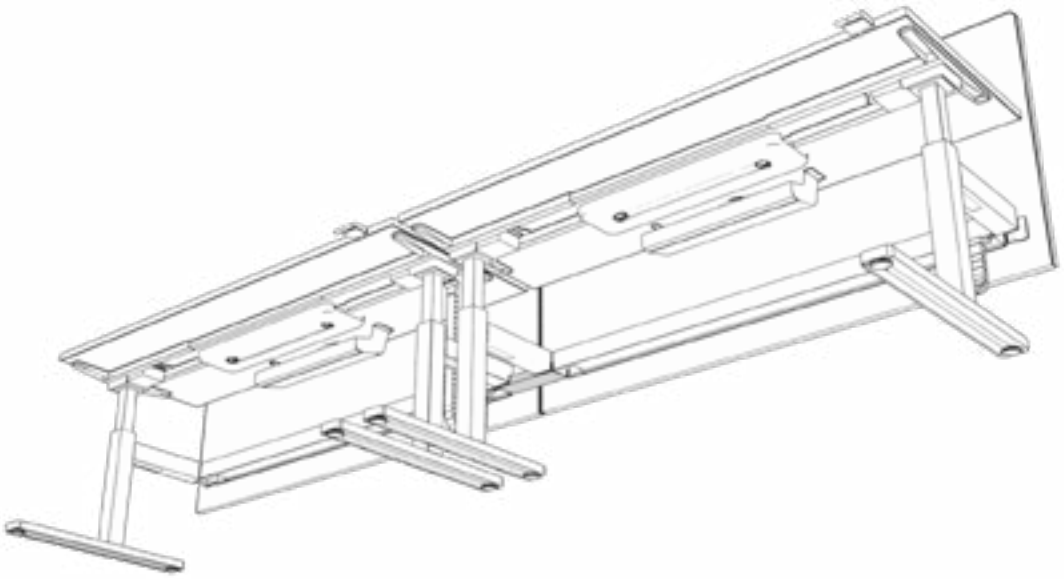

Finishes

- Finish Options:
  - Very White
  - Ebony

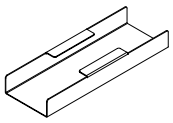

Wire Bridge (MHWBEWB)

wire cover basics

Wire Covers are used to close up the gap where cables enter the medium capacity spine trays whenever full cable enclosure is required.

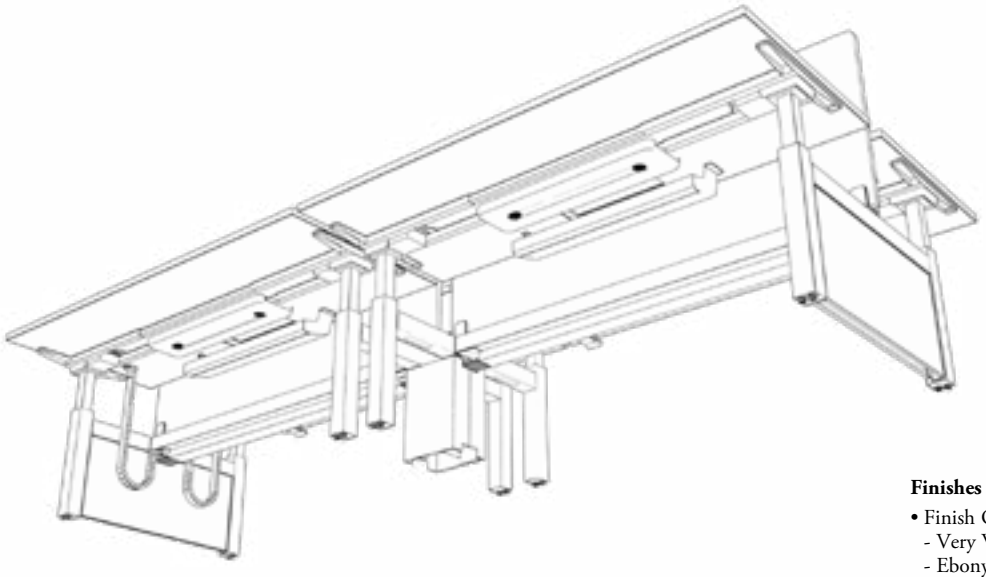

Finishes

- Finish Options:
  - Very White
  - Ebony

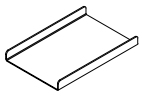

Wire Covers (MHWBEWV)

planning with wire covers

The following should be considered when planning with the wire covers.

Wire covers are mandatory if specifying hard-wired electrics.

double-sided

Wire Covers can be specified in three different types of applications if medium capacity spine trays are specified.

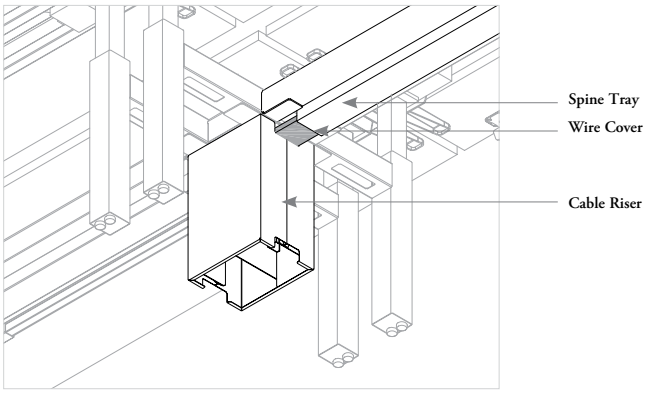

Wire Cover between Spine Tray and Wire Bridge.

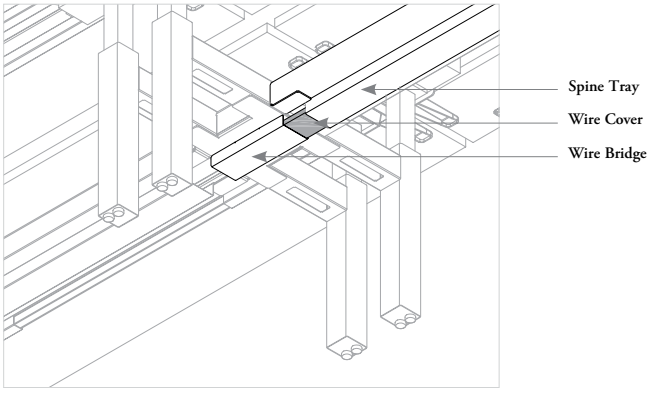

Wire Cover between Spine Tray and End Gable.

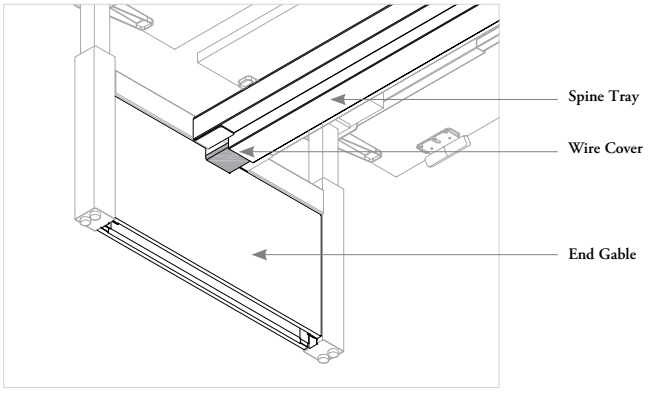

planning with wire covers (continued)

The following should be considered when planning with the wire covers.

single-sided

Wire Covers can be specified in three different types of applications if medium capacity spine trays are specified.

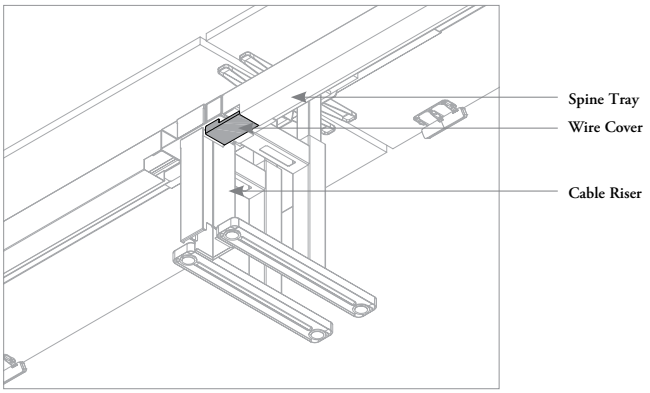

Wire Cover between Spine Tray and Wire Bridge.

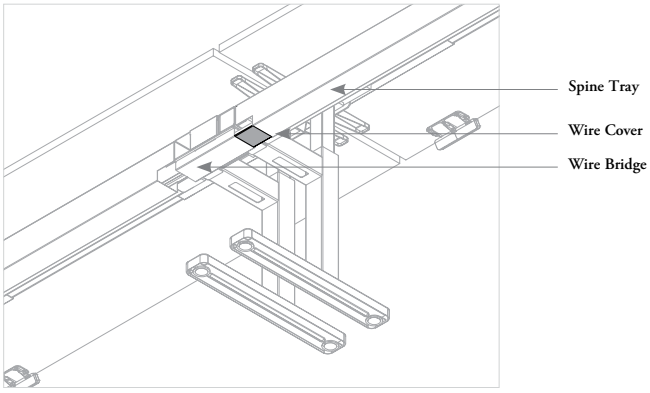

Wire Cover between Spine Tray and End Gable.

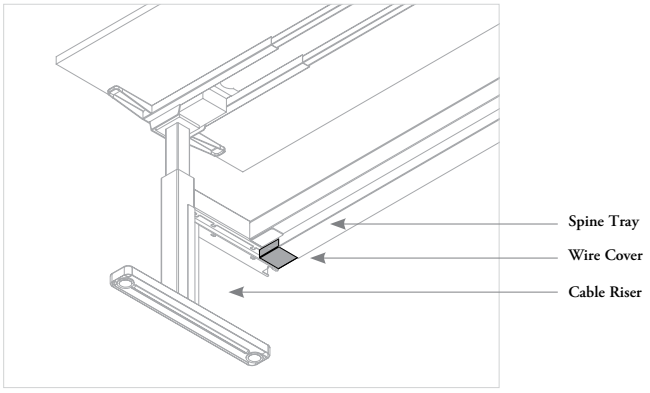

double & single-sided screens overview

There are four types of screens designed to add privacy in double and single-sided height-adjustable bench applications.

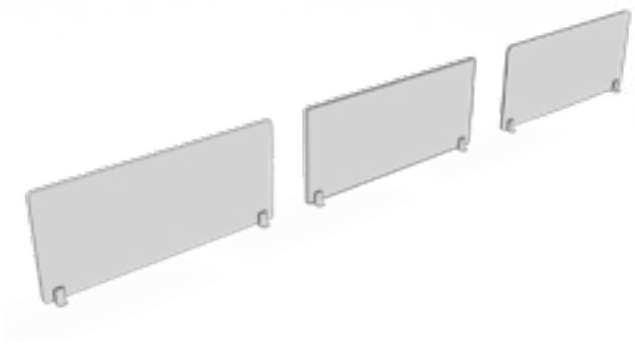

Spine Screens

- Run along the length of the bench
- Centered between worksurfaces
- Attached with brackets that accommodates various thicknesses of screens
- Solid, Beveled and Framed Fabric options
- Available with or without a gap

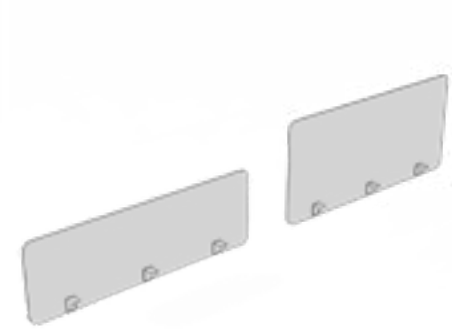

Desk Edge Screens

- Attaches to individual worksurfaces
- Pairs with radius corner worksurface
- Only available with a gap
- Infinity style only

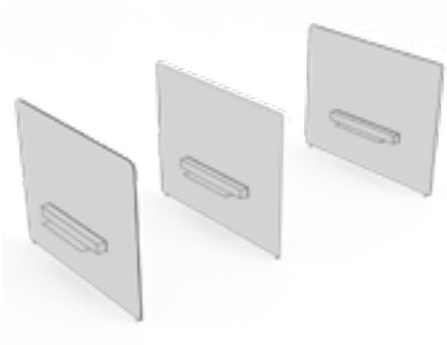

End of Run Screens

- Run lengthwise at the end of a bench for increased privacy
- Attach to the bench frame
- Solid, Beveled and Framed Fabric options

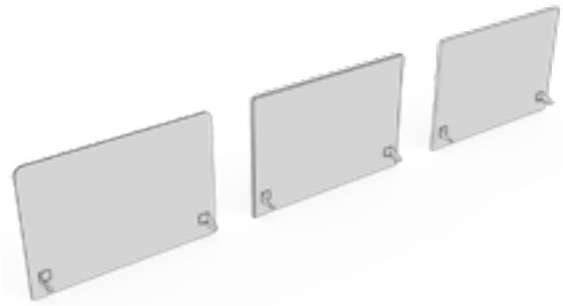

Single-Sided Corridor Screens

- Attach along the back of Single-Sided worksurfaces
- Available in two datum heights
- Solid, Beveled and Framed Fabric options

double-sided spine screen basics

Double-Sided Spine Screens run along the length of the bench and provide privacy and functionality.

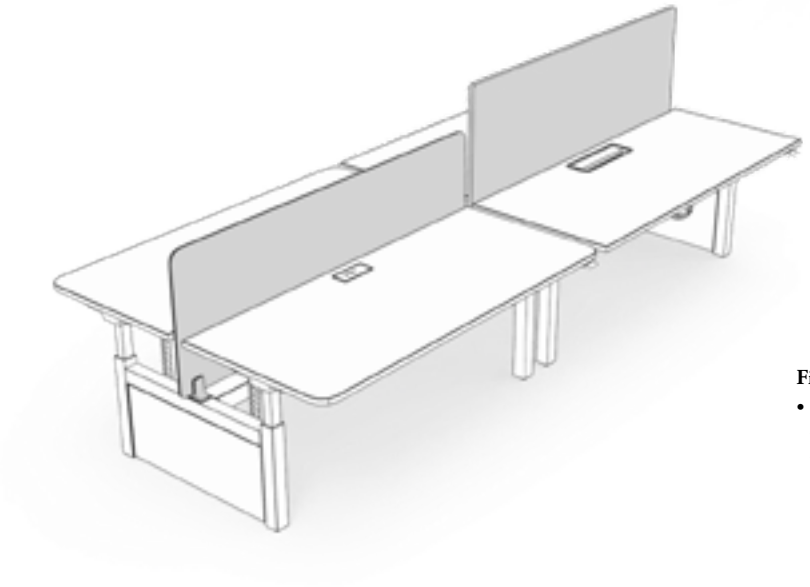

Finishes

- Bracket Finish
  - Very White
  - Ebony

- Gap:
  - Yes
  - No
- Height: 11 dm, 13 dm
- Depth: 12 dm, 14 dm, 15 dm, 16 dm, 18 dm

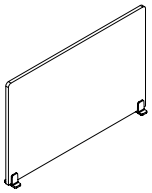

Double-Sided Spine Screen - Beveled Fabric (MHWBCTC)

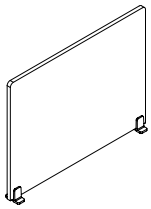

Double-Sided Spine Screen - Framed Fabric (MHWBCTF)

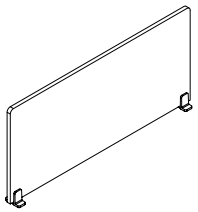

Double-Sided Spine Screen - Solid (MHWBCTS)

planning with double-sided spine screens

The following should be considered when planning with Double-Sided Spine Screens.

Spine Screens can be specified with a gap or no gap.

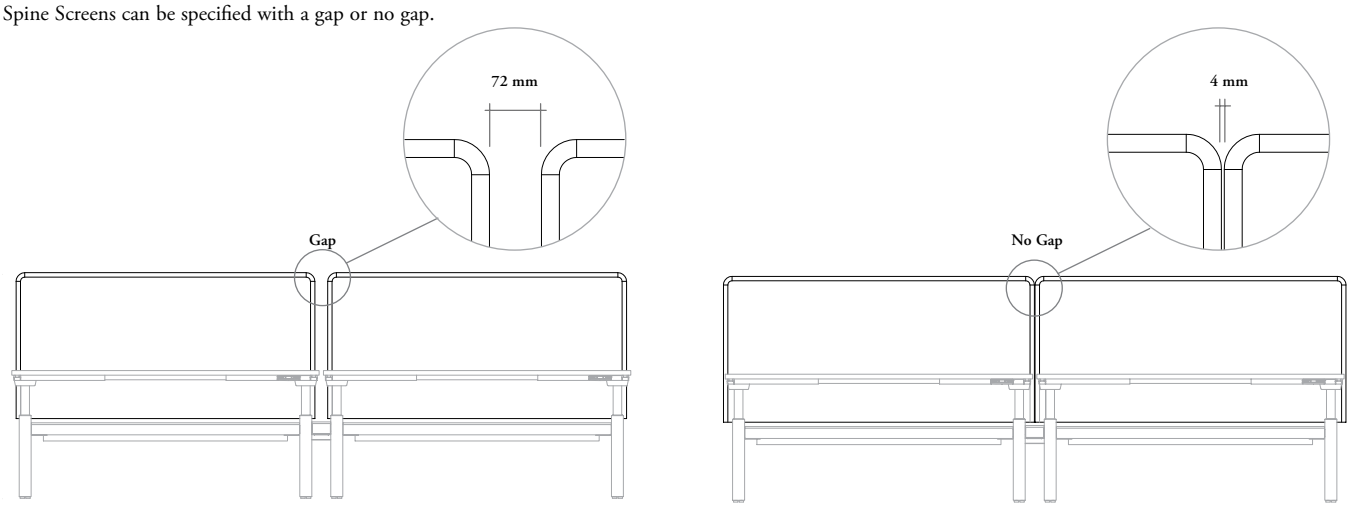

There are two datum heights available:
- 11 dm
- 13 dm

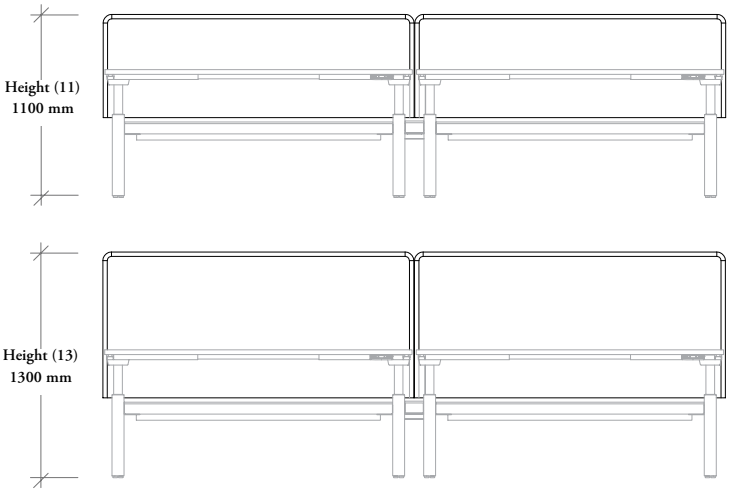

There is a 76 mm gap between worksurfaces which provides a 25 mm pinch gap on each side of the spine.

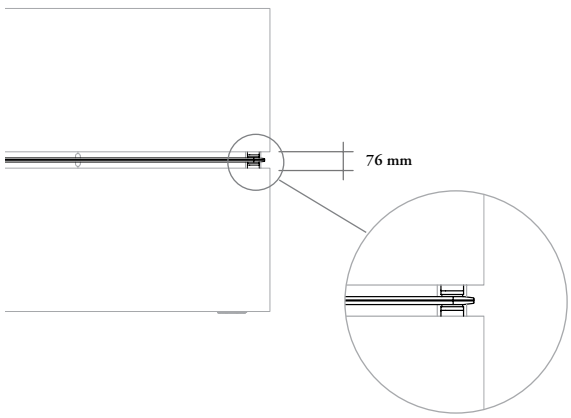

double-sided desk edge screen basics

Double-Sided Desk Edge Screens are offered in one style and are only available in the gap width option.

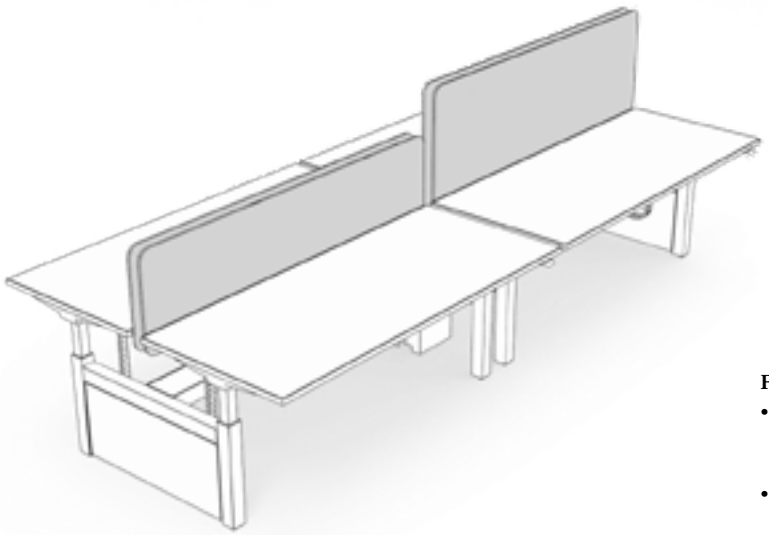

Finishes

- Screen Finishes
  - Panel Fabric
  - Upholstery Fabric
- Bracket Finish
  - Very White
  - Ebony
- Frame Finish
  - Very White
  - Ebony

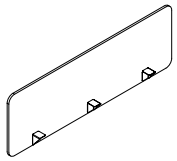

Double-Sided Desk Edge Screen – Infinity (MHWBCDX)

- Height: 11 dm, 13 dm
- Depth: 12 dm, 14 dm, 15 dm, 16 dm, 18 dm

planning with double-sided desk edge screens

The following should be considered when planning with Double-Sided Desk Edge Screens.

There are two datum heights available with Double-Sided Desk Edge Screens:
- 11 dm
- 13 dm

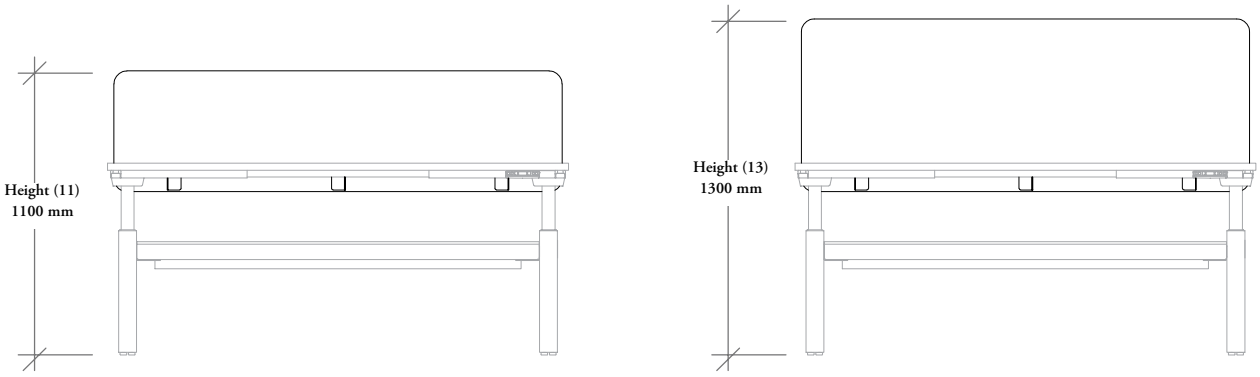

There is a 7.6 mm wire gap on a Double-Sided Bench which will allow for a 25 mm pinch gap when specifying Double-Sided Desk Edge Screens on back to back worksurfaces.

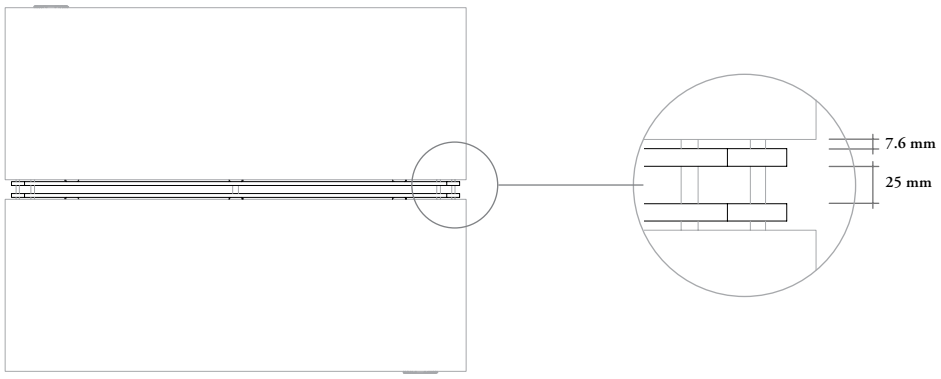

double-sided end of run screen basics

Double-Sided End of Run Screens attach to the frame to provide privacy at the end of the run.

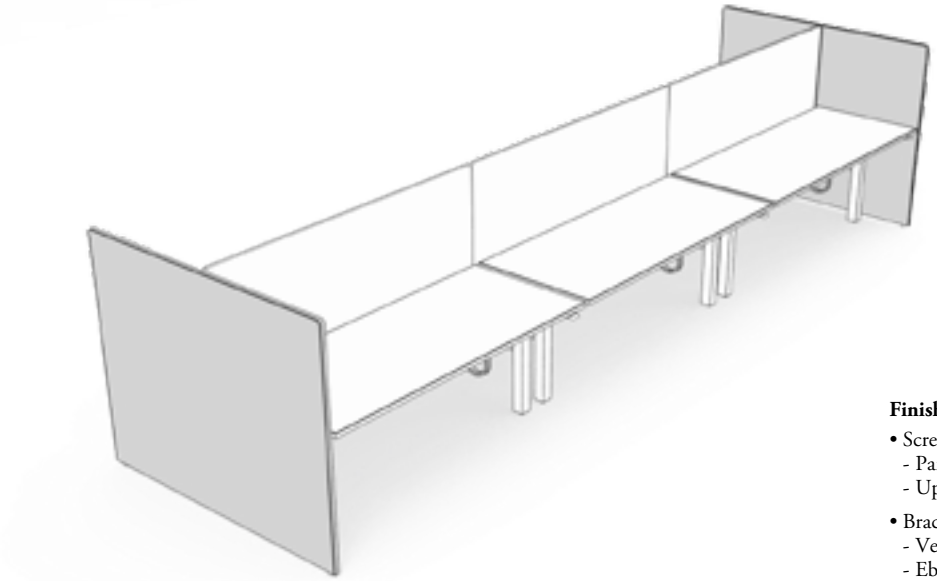

Finishes

- Screen Finishes
  - Panel Fabric
  - Upholstery Fabric
- Bracket Finish
  - Very White
  - Ebony
- Frame Finish
  - Very White
  - Ebony

- Height: 11 dm, 13 dm
- Width: 14 dm, 16 dm

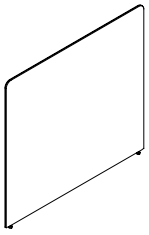

Double-Sided End of Run Screen - Beveled Fabric (MHWBTWC)

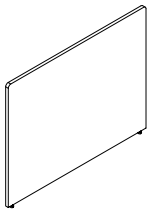

Double-Sided End of Run Screen - Framed Fabric (MHWBTWF)

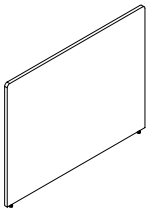

Double-Sided End of Run Screen - Solid (MHWBTWS)

planning with double-sided end of run screens

The following should be considered when planning with Double-Sided End of Run Screens.

There are two datum heights available with Desk Edge Screens:
- 11 dm
- 13 dm

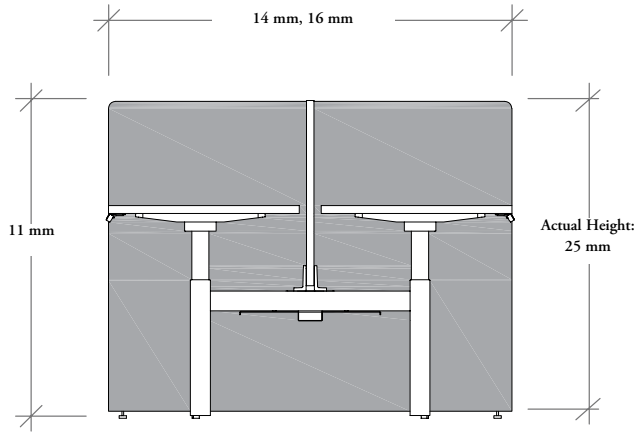

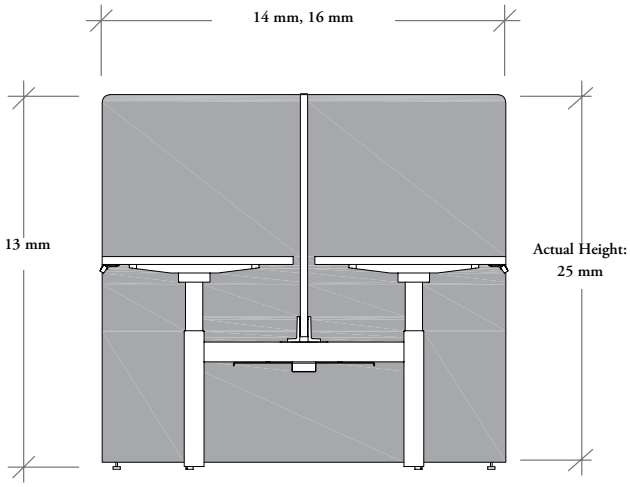

single-sided corridor screen basics

Single-Sided Corridor Screens provide enclosure along the back of single-sided benches in a corridor application.

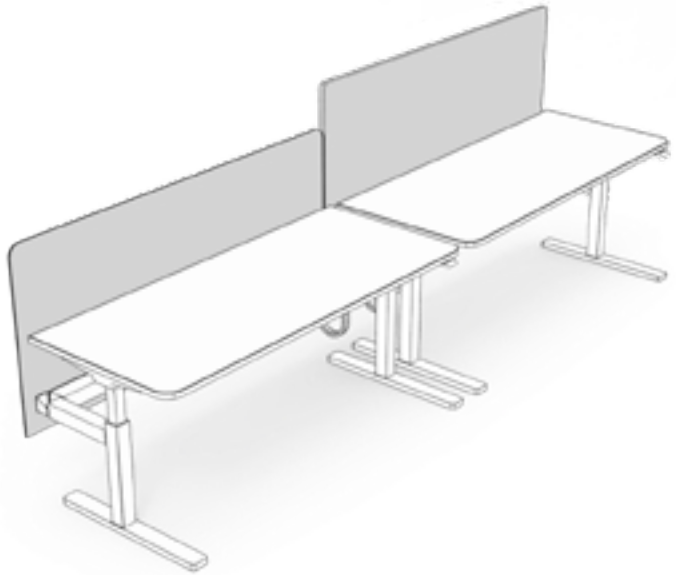

Finishes

- Screen Finishes
  - Panel Fabric
  - Upholstery Fabric
- Bracket Finish
  - Black

- Height:
  - 11 dm, 13 dm
- Width:
  -12 dm, 14 dm, 15 dm, 16 dm, 18 dm

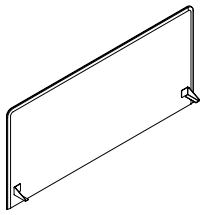

Single-Sided Corridor Screen - Beveled Fabric (MHWBLSC)

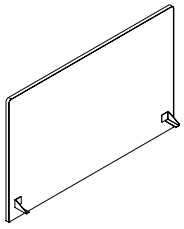

Single-Sided Corridor Screen - Framed Fabric (MHWBLSF)

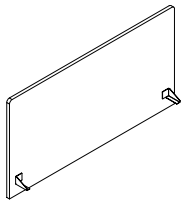

Single-Sided Corridor Screen - Solid (MHWBLSS)

planning with single-sided corridor screens

The following should be considered when planning with Single-Sided Corridor Screens.

There are two different heights when planning with Corridor Screens:
- 11 dm
- 13 dm

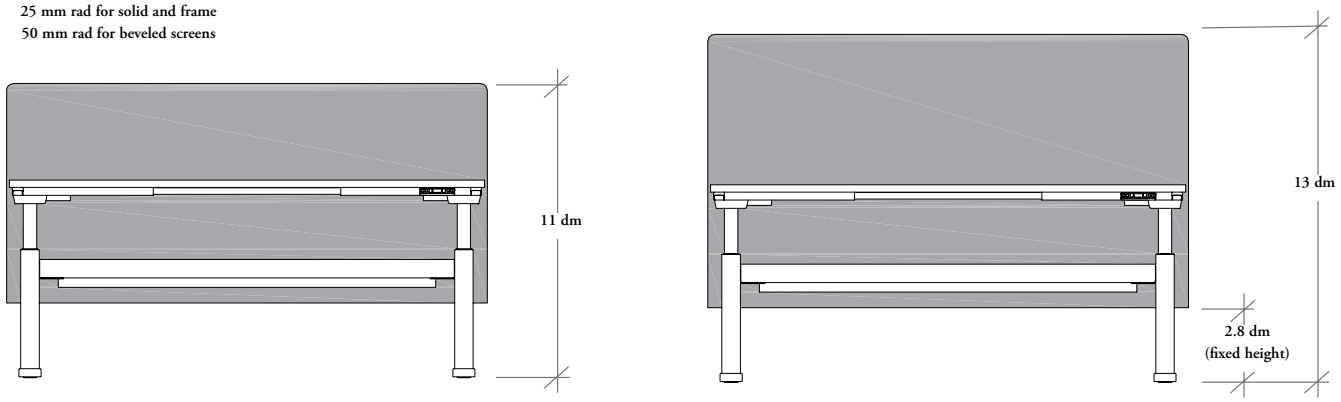

There is a no gap option with Corridor Screens.

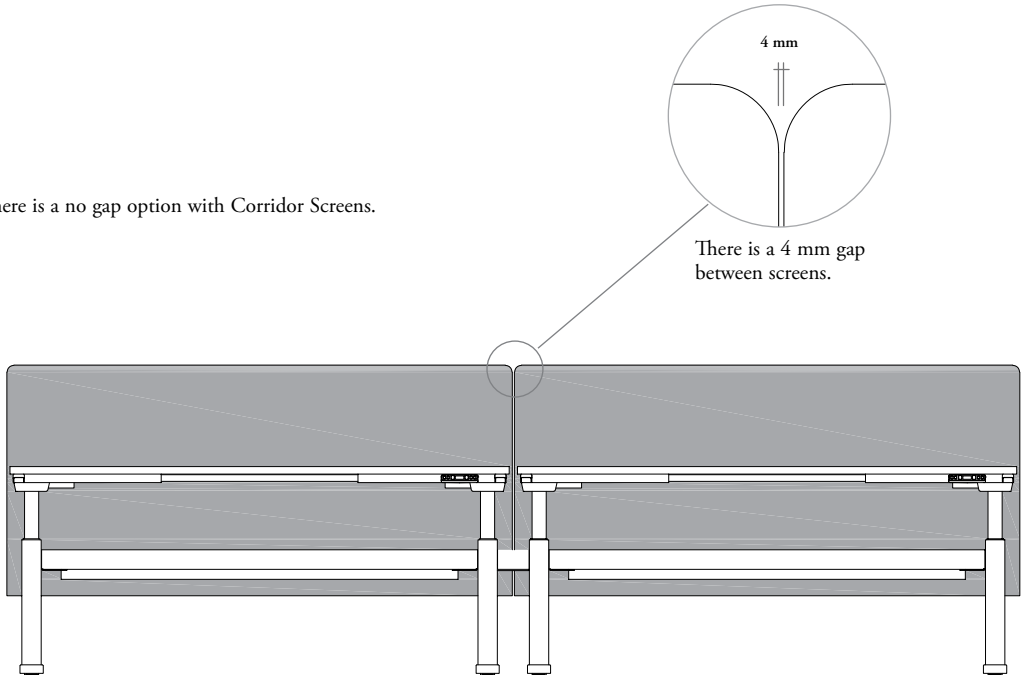

height-adjustable table frame overview

The Height-Adjustable Table promotes healthy postures and is available to specify with a base and option of rectangular worksurfaces or rectangular worksurfaces with with radius corners.

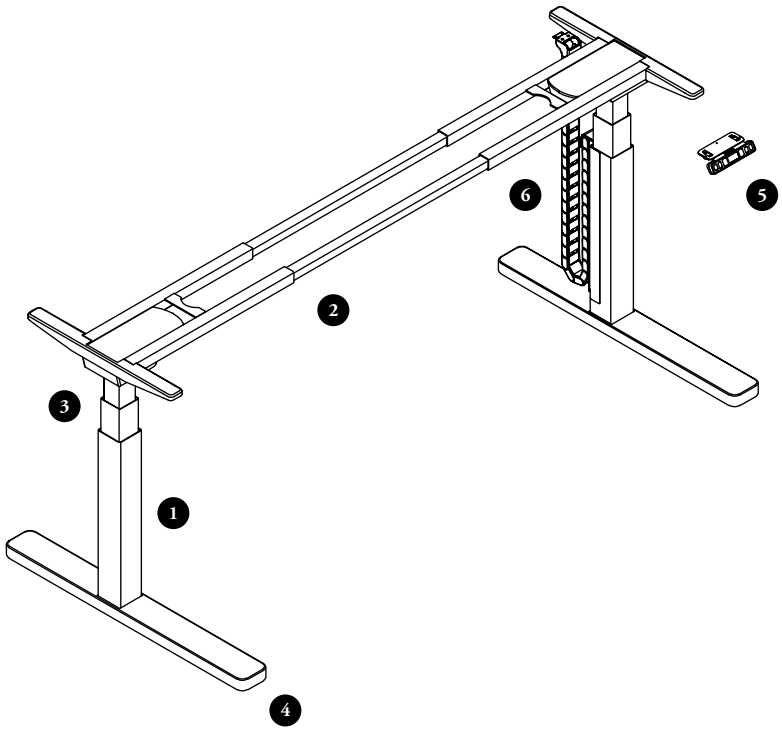

1. **hiSpace Leg Column**
2. **Worksurface Strut**
3. **Telescopic Top Frame**
4. **Leveler**
5. **Digital Switch**
6. **Vertical Wire Carrier (Optional)**

height-adjustable table frame basics

Height-adjustable tables provide a refined aesthetic for use in freestanding or panel environments.

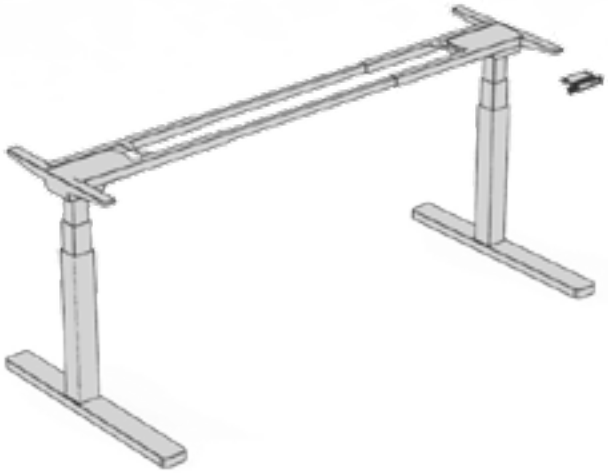

Finishes

- Frame finishes available:
  - Ebony
  - Very White

- Table Base size is determined by the size of the worksurface it is used with
- Width (to work with worksurface width)
  - 12dm, 14dm, 15dm, 16dm, 18dm
- Depth
  - 07dm, 08dm
- Switch:
  - Display with up/down memory
- Base Mechanism
  - Extended Range Electric-Extended Height (574mm - 1237mm)

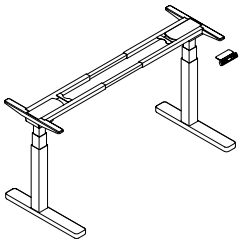

Height-Adjustable Freestanding Table Mechanism (MYWYR)

planning with height-adjustable table frames

The following should be considered when planning with height-adjustable table frames.

height-adjustment ranges

Height-adjustment table frame ranges are 574 mm - 1237 mm.

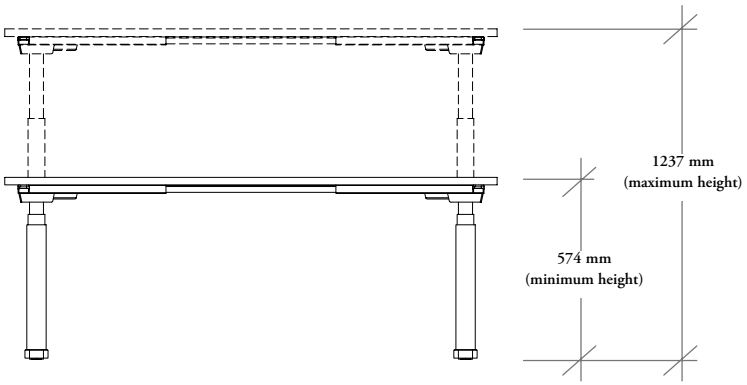

frame depths

Height-adjustment table frame depths are 07 dm and 08 dm.

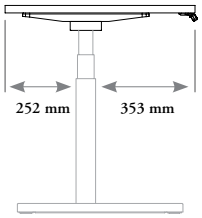

07 dm deep Worksurface

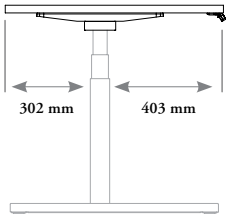

08 dm deep Worksurface

planning with height-adjustable table frames (continued)

frame widths

Height-adjustable bench widths are nominal.

To calculate the user space between the legs of the frame, take the nominal width and - 2.48 dm.

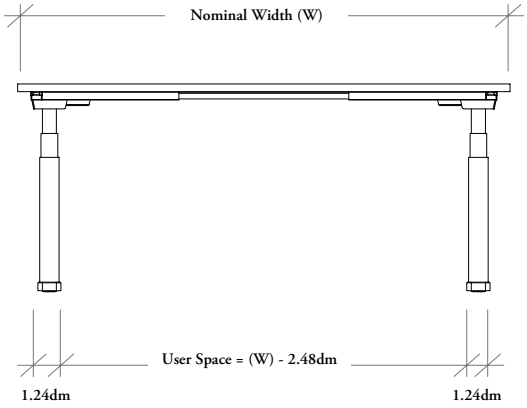

leveling

Height-adjustable tables allow for 80 mm of leveling.

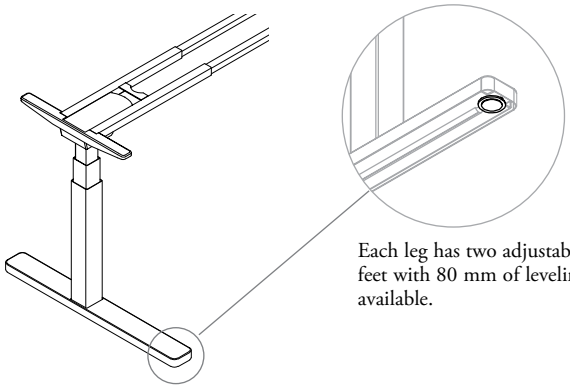

Each leg has two adjustable feet with 80 mm of leveling available.

switches

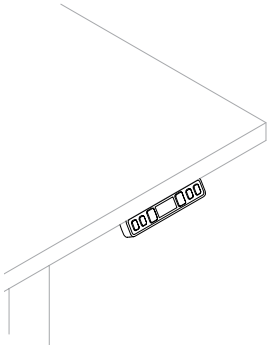

Display with Up/Down Memory (D)

- Basic up/down function
- Display
- Three programmable memory settings
- Error Code Read-Out
- Can be installed on the right or left hand side of the user

height-adjustable table worksurface basics

Rectangular Worksurfaces are available with or without power accessibility and can also accommodate screens.

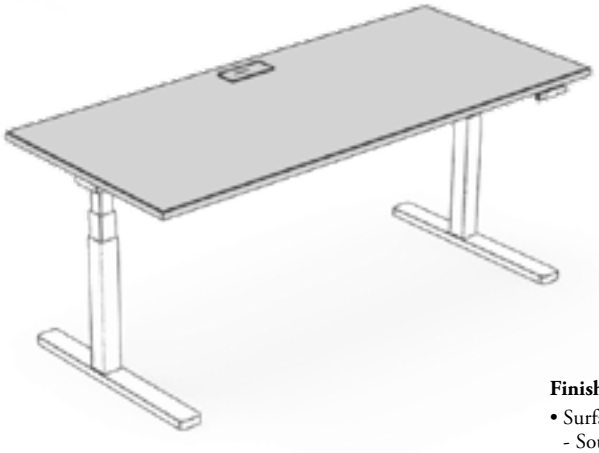

- Depths:
  - 07 dm, 08 dm
- Widths:
  - 12dm, 14dm, 15dm, 16dm, 18dm
- Access Door Cut Out Size:
  - NN (None)
  - 04dm
  - 06dm
- Grommet Options:
  - No Grommet
  - Grommet Centre
  - Grommet Left
  - Grommet Right
  - Both Left and Right

Finishes

- Surface Finishes available:
  - Source Laminate
  - Foundation Laminate
- Edge Banding Finish:
  (Rectangular Worksurface with Radius Corners only)
  - Matching Trim
  - Black Trim
- Grommet Cap Finishes available:
  - Very White
  - Ebony
- Access Door Finish:
  - Metal
  - Accent

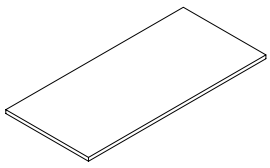

Worldwide Rectangular Worksurface with Radius Corners (MYWWB)

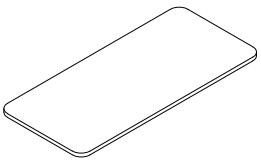

World wide Rectangular Worksurface with Square Corners (MYWWJ)

planning with height-adjustable table worksurfaces

grommets

- Grommet cut out options:
  - None
  - Centre
  - Left
  - Right
  - Both Left & Right

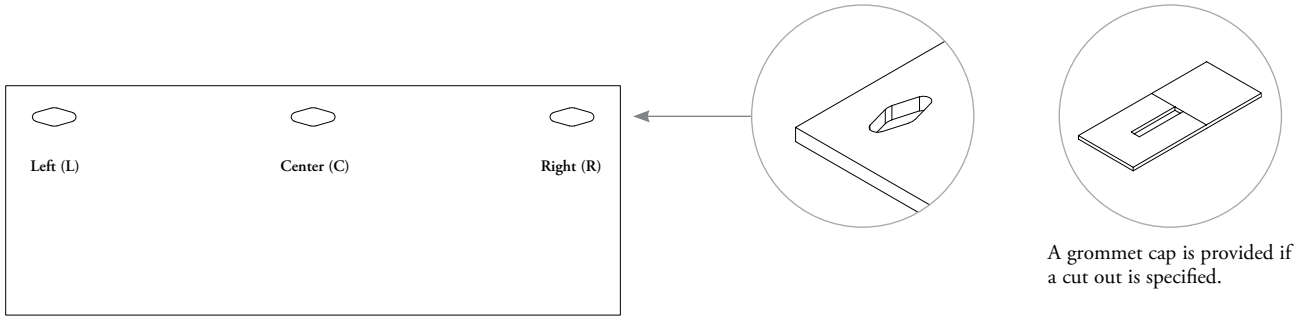

A grommet cap is provided if a cut out is specified.

access doors

- Access door options:
  - None
  - Centered
- There are two sizes of access doors
  - 04 dm
  - 06 dm
- When specifying 1200 mm wide worksurface, only the 400 mm Access Door is applicable

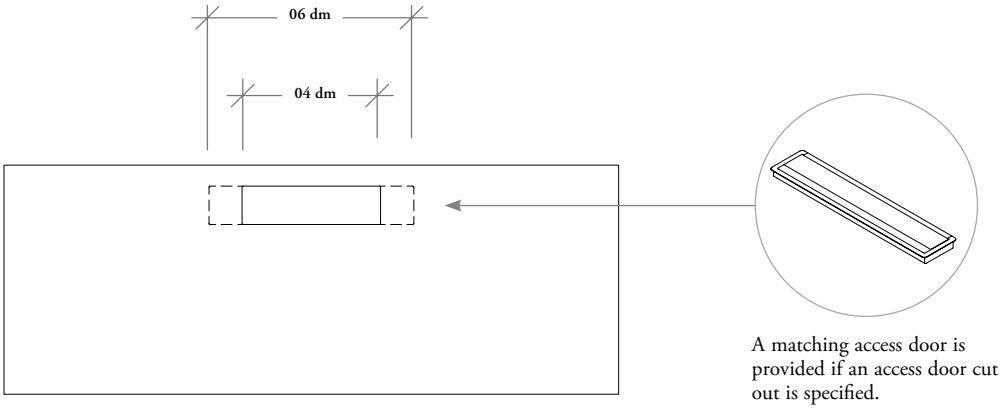

A matching access door is provided if an access door cut out is specified.

under worksurface cable tray for tables basics

Under Worksurface Cable Trays provide housing for an under worksurface power option that is accessible through the access door cut out. The tray also provides a storage area for cables if no plug box is specified.

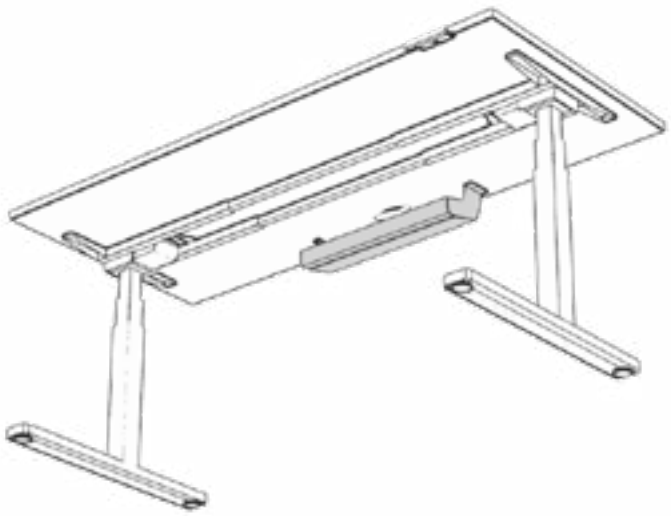

Finishes

- Finish available:
  - Very White
  - Ebony

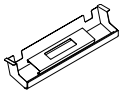

Under Worksurface Cable Tray (MYWUY)

- Size available:
  - 04dm, 06dm
- Plug Mount:
  - None
  - Hard Wire 4-Gang
  - Powerbox M 4-Gang (specified separately)

planning with under worksurface cable trays for tables

The following should be considered when planning with under worksurface cable tray.

- When specifying an access door cut out, you must specify an under worksurface cable tray
- All three types of cable trays will work with both size of access door cut outs (04 dm and 06 dm)
- A 06d m wide Cable Tray is incompatible with 12 dm wide worksurfaces

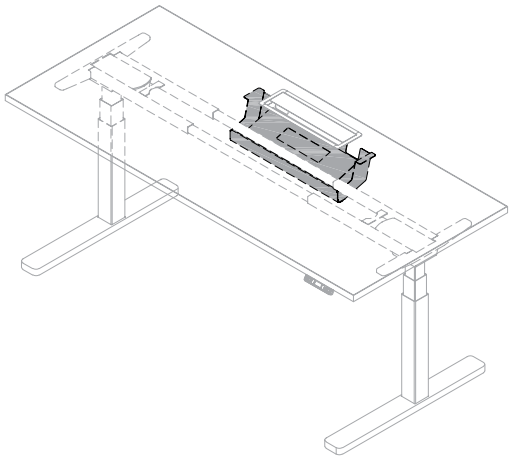

There are three under worksurface cable tray options available:

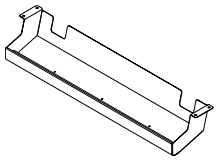

None
If no electrics are specified, the Cable Tray acts as a place to store power cables.

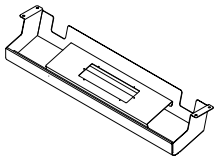

Hardwired 4-Gang
Mounting of this option is for hard wired electrics which must be done by an electrician.

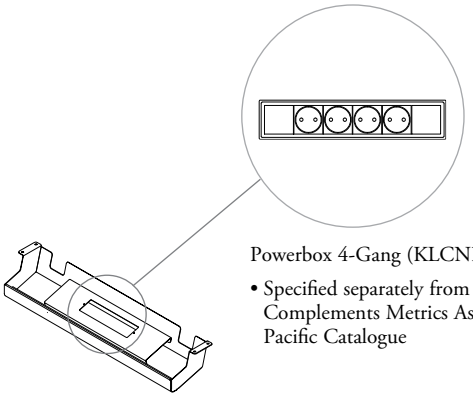

Powerbox 4-Gang (KLCNB4)
- Specified separately from Complements Metrics Asia Pacific Catalogue

Powerbox 4-Gang
This option includes a mounting plate that will accommodates a Powerbox.

Edge clamp accessories will not be able to be installed along the width of the access door.

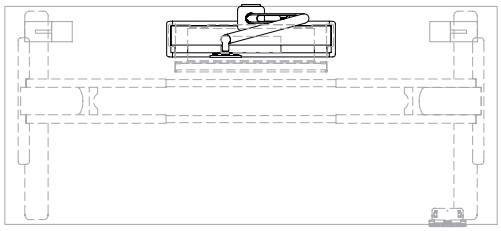

vertical wire carrier for tables basics

Vertical Wire Carrier serves as a raceway for power and data cables to run from power source to worksurface.

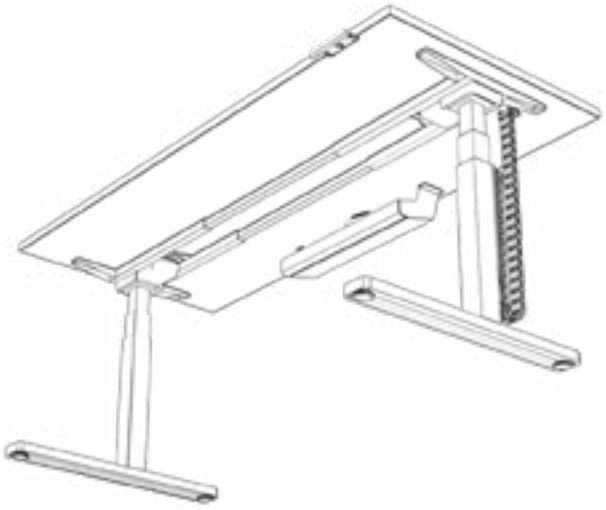

Finishes

- Finish available:
  - Very White
  - Ebony

Vertical Wire Carrier for Freestanding hiSpace (MYWEE)

- Style available:
  - Standard Capacity
  - Perpendicular
- Can be installed on right or left hand of user edge

felt cable cover organizer for tables basics

The Felt Cover Cable Organizer acts to hide the bench's electrics control box and associated wiring.

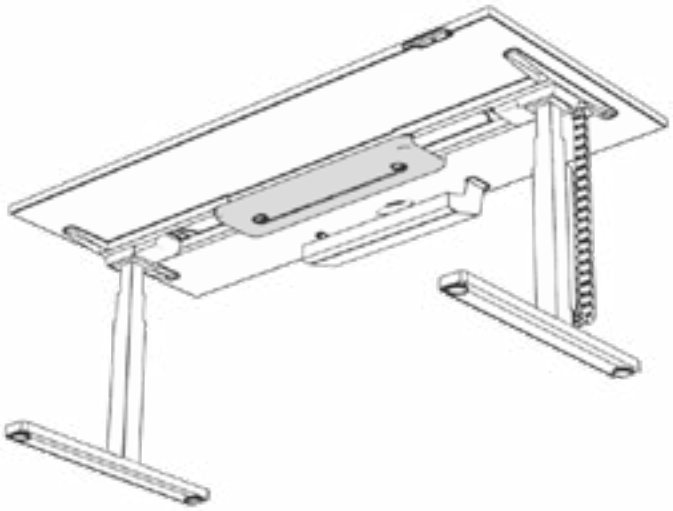

Finishes

- Finish available:
  - Very White
  - Ebony

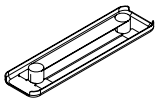

Felt Cable Cover Organizer (MHWBEWY)

modesty panel basics

Modesty Panels provide under worksurface privacy and is available with either a rectangular or curved edge profile.

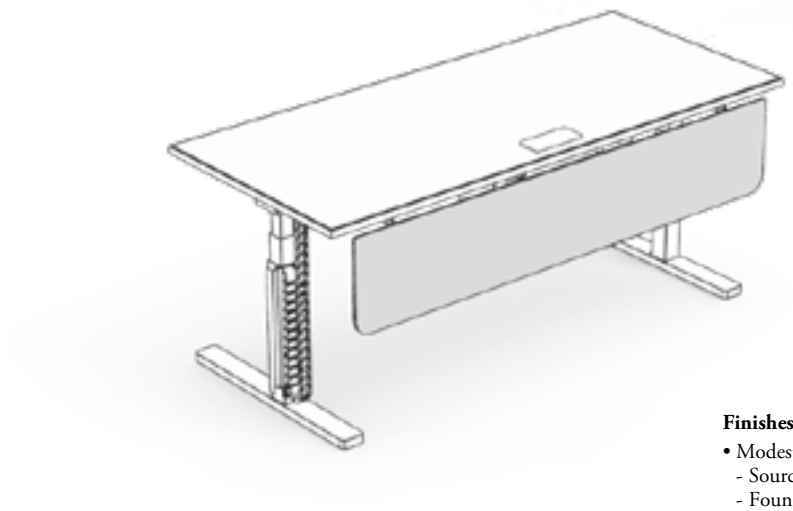

- Modesty Height:
  - 38 dm
- Width:
  - 12dm, 14dm, 15dm, 16dm, 18dm
- Corner Style available:
  - Rectangular
  - Radius

Finishes

- Modesty Panel, Solid Finishes
  - Source Laminate
  - Foundation Laminate
- Modesty Panel, Felt Finishes
  - Pewter
  - Lunar
- Bracket Finish
  - Very White
  - Ebony

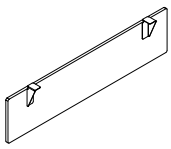

Modesty Panel, Solid (MYWMS)

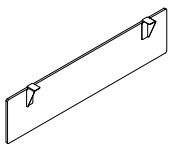

Modesty Panel, Smooth Felt (MYWMF)

planning with modesty panels

The following should be considered with modesty panels.

- Modesty panels are mounted to the underside of the worksurface and have a 20 mm gap which allows for wires to be directed from the worksurface down through a grommet cut out to power source
- Modesty panels are compatible with Under Worksurface Cable Trays (MYWUY)

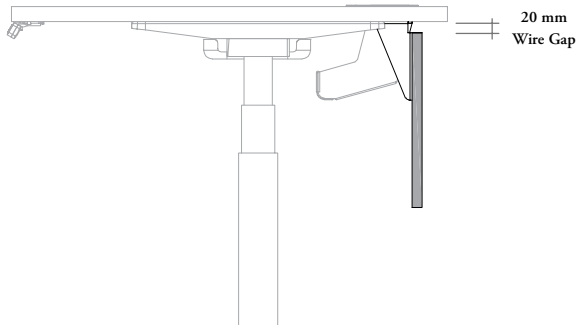

Modesty panels are not compatible with any desk edge mounted accessories.

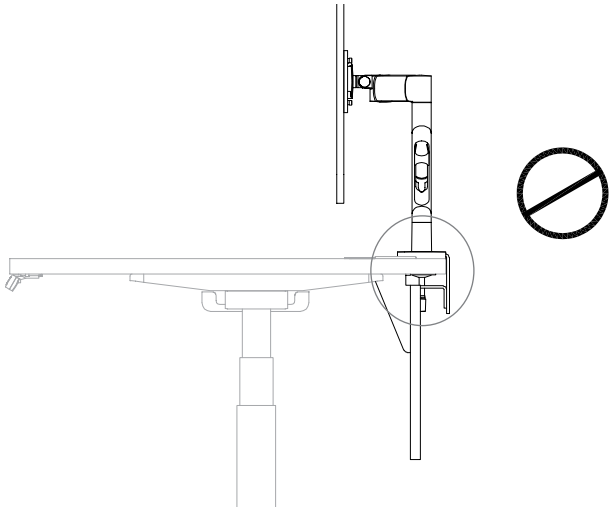

desk edge screen basics

Desk Edge Screens offer the option of a straight or curved profile and are designed to provides privacy along the front edge of a table.

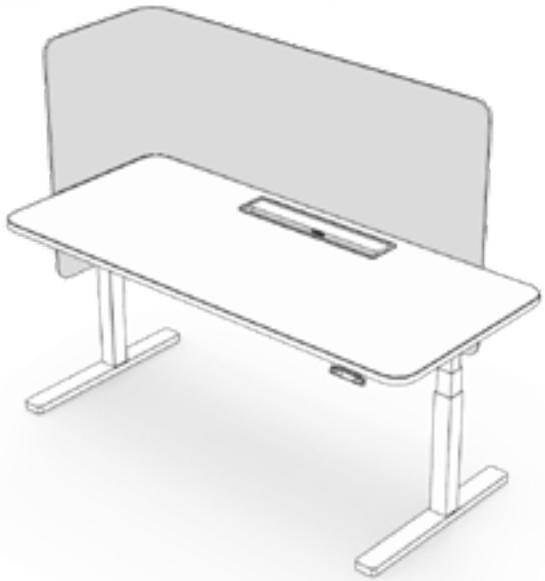

- Modesty Height:
  - 38 dm
- Width:
  - 12dm, 14dm, 15dm, 16dm, 18dm
- Corner Style available:
  - Rectangular
  - Radius

Finishes

- Screen Finishes
  - Source Laminate
  - Foundation Laminate
  - Panel Fabrics
  - Upholstery Finishes
- Modesty Panel, Felt Finishes
  - Pewter
  - Lunar
- Bracket Finish
  - Very White
  - Ebony

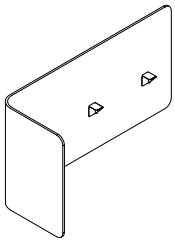

Radius Corner Desk Edge Screen for Freestanding Tables (MYWXC)

- Depth:
  - 20 dm
- Width:
  - 12 dm, 14 dm, 15 dm, 16 dm
- Modesty Height:
  - 38 dm
- Orientation:
  - Right-handed
  - Left-handed

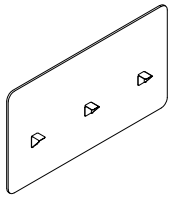

Infinity Desk Edge Screen for Freestanding Table (MYWXD)

- Datum Height:
  - 11 dm, 13 dm
- Width:
  - 12 dm, 14 dm, 15 dm, 16 dm, 18 dm
- Modesty Height:
  - 38 dm

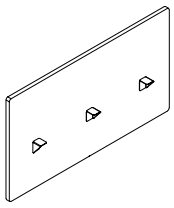

Desk Edge Screen, Framed Fabric (MYWFD)

- Datum Height:
  - 11 dm, 13 dm
- Width:
  - 12 dm, 14 dm, 15 dm, 16 dm, 18 dm
- Modesty Height:
  - 38 dm

planning with desk edge screens

The following should be considered when planning with desk edge screens.

There are two datum heights available with Desk Edge Screens:
- 11 dm
- 13 dm

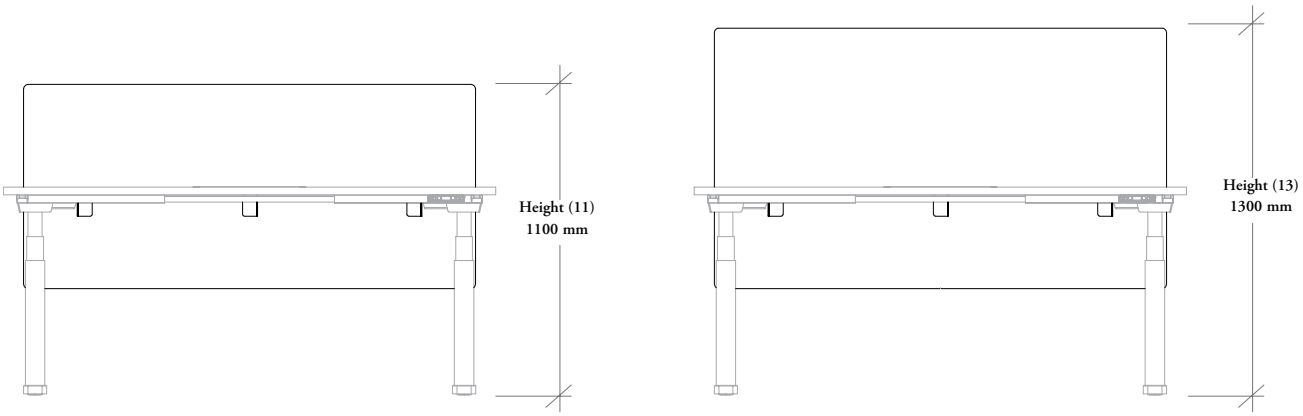

There is a 12.5 mm wire gap between the edge of the work surface and desk edge screens.

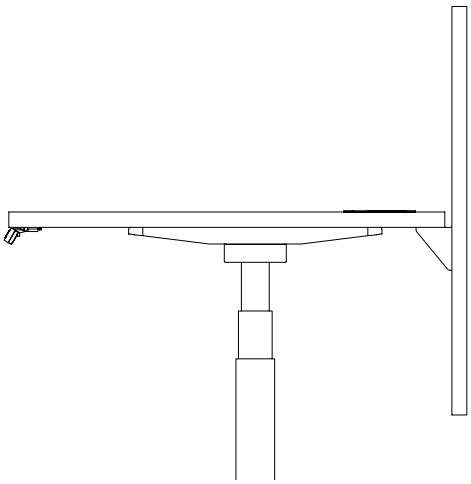

planning with radius corner desk edge screen for freestanding tables

The following should be considered when planning with radius corner desk edge screens for freestanding tables.

There is a 12.5mm wire gap between the Corner Desk Edge Screen and Worksurface.

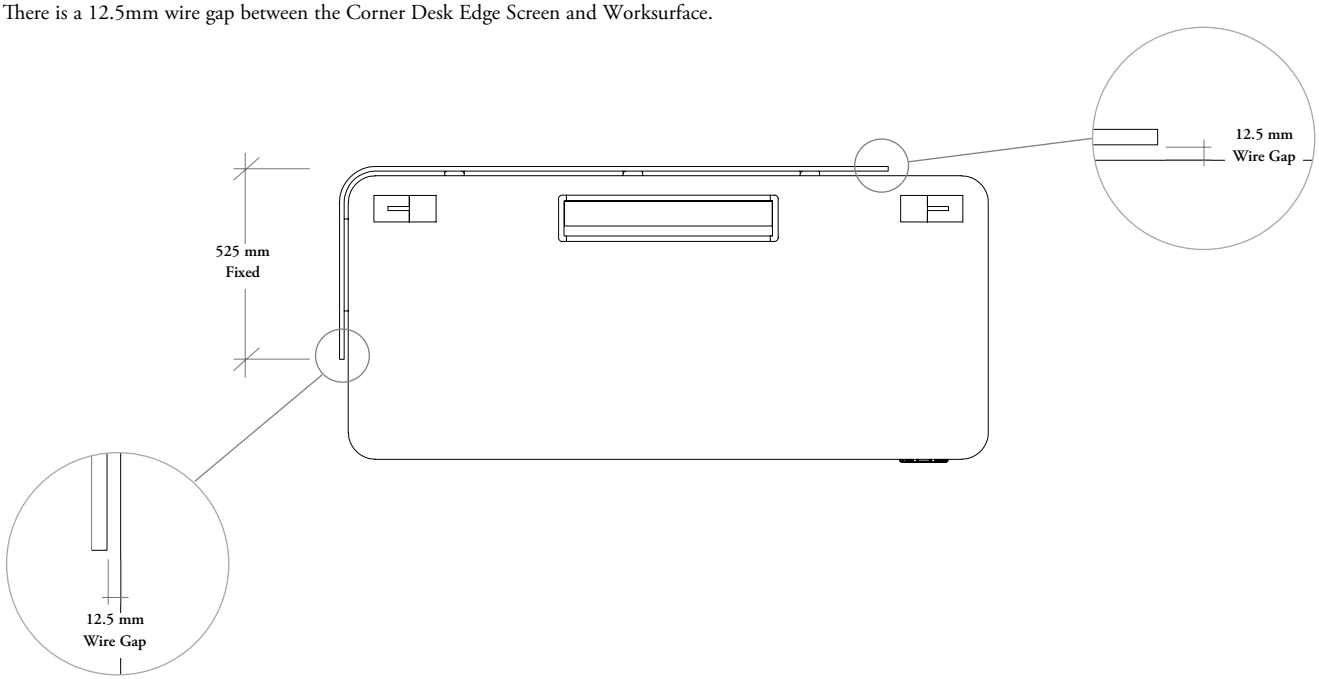

bag drop basics

The Bag Drop offers storage for personal items and work bag storage below the worksurface with both Double and Single-Sided Height-Adjustable Bench planning.

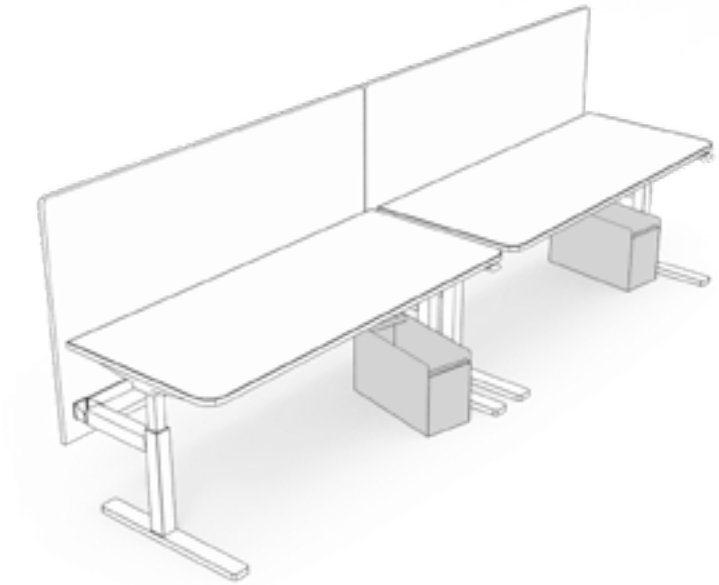

Finishes

- Case Finish options:
  - Very White
  - Ebony
- Front Finish options:
  - Very White
  - Ebony
  - Accent
- Smooth Felt Liner options:
  - Pewter
  - Lunar

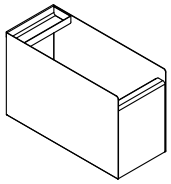

Bag Drop (MHWBAWR)

bag drop finishes

The following outlines the finishes available with the bag drop.

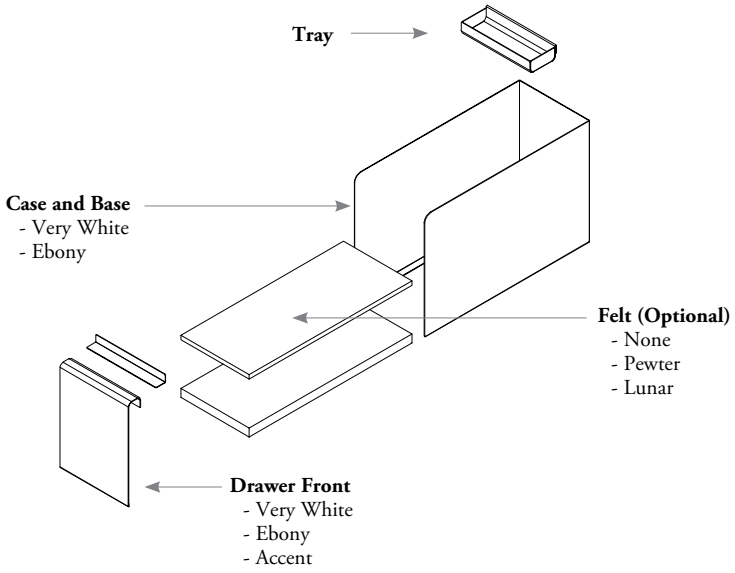

Very White Case

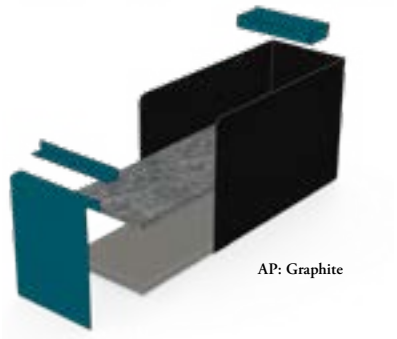

Ebony Case

hanging whiteboard basics

Whiteboard hangs from all screen types in Double and Single-Sided Height-Adjustable Benches.

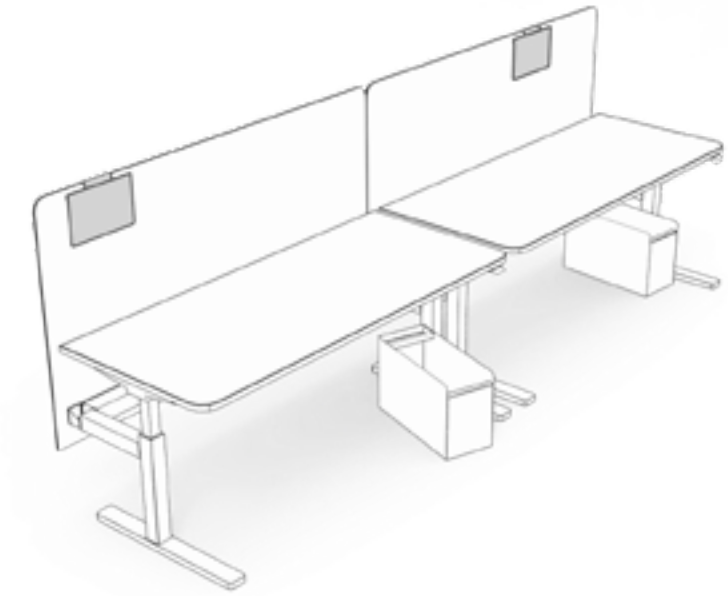

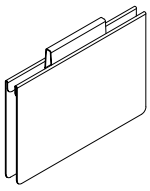

Hanging Whiteboard (MHWBAWW)

- Available in following applications:
  - Single-Sided-Whiteboard
  - Double-Sided Whiteboard
- Screen type available:
  - Curved
  - Framed
  - Solid
  - Infinity

hispace workstation name plate basics

hiSpace Workstation Name Plate can be magnetically attached onto a screen.

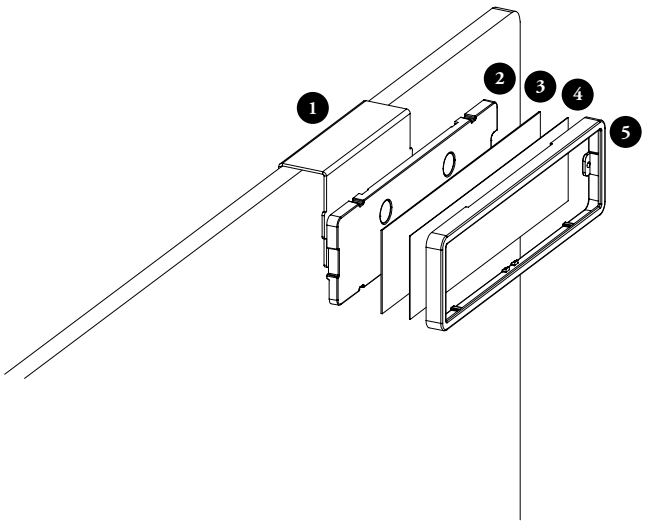

1. Mounting Bracket
2. Molded Magnet Chassis
3. Whiteboard Laminate
4. Transparent Cover Sheet
5. Painted Metal Bezel

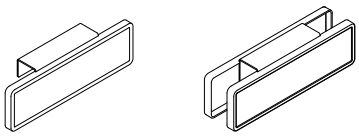

hiSpace Workstation Name Plate (MHWBANP)

Application:
- Hang-on Single-Sided
- Hang-on Double-Sided

Screen Type:
- Solid
- Framed Fabric
- Smooth Felt
- Infinity

planning with hispace workstation name plate

The following should be considered when planning with hiSpace Workstation Name Plate.

It can be used in two different ways:
– Whiteboard: for non-permanent use such as hot-desking or co-working applications
– Custom Template: for more permanent use, customers can also print their own material.

The name plate takes a 190 mm x 50 mm piece of paper or cardstock that can be sealed behind a plastic sheet.

Specify the name plate based on the correct screen application. Single-sided and double-sided options are available based on the screen type. Hang-on Double-Sided is not available for Infinity and Smooth Felt Screens.

Solid

Infinity

Framed Fabric

Smooth Felt

hispace
price & product guide

hispace
price & product guide

DOUBLE-SIDED HEIGHT-ADJUSTABLE BENCH 103

SINGLE-SIDED HEIGHT-ADJUSTABLE BENCH 125

120 HEIGHT-ADJUSTABLE BENCH 149

UNIVERSAL COMPONENTS 161

hispace double-sided height-adjustable bench

product map

MHWBFYD Double-Sided Frame

Page 106

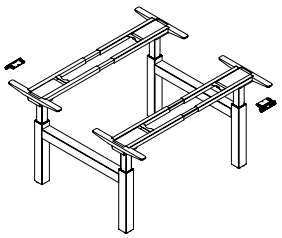

MHWBFBD Double-Sided Base Link

Page 107

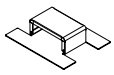

MHWBFTL Double-Sided Spine Tray – Low Capacity

Page 108

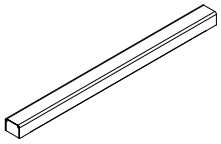

MHWBFTM Double-Sided Spine Tray – Medium Capacity

Page 109

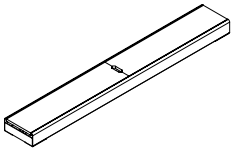

MHWBFTH Double-Sided Spine Tray – High Capacity

Page 110

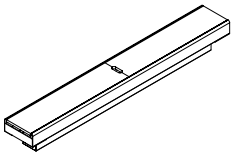

MHWBWBD Double-Sided Rectangular Worksurface with Square Corners

Page 112

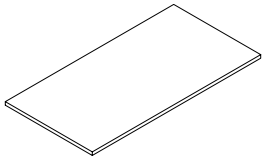

MHWBWJD Double-Sided Rectangular Worksurface with Radius Corners

Page 114

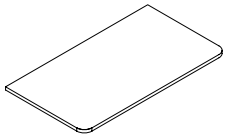

MHWBCDX Double-Sided Desk Edge Screen – Infinity

Page 116

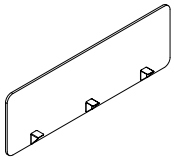

MHWBCTC Double-Sided Spine Screen – Beveled Fabric

Page 117

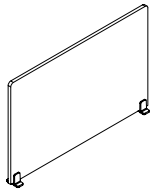

MHWBCTF Double-Sided Spine Screen – Framed Fabric

Page 118

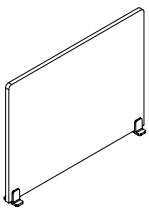

MHWBCTS Double-Sided Spine Screen – Solid

Page 119

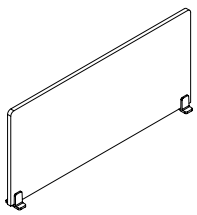

MHWBECD Double-Sided Cable Riser

Page 120

product map

MHWBTWC Double-Sided End of Run Screen – Beveled Fabric

Page 121

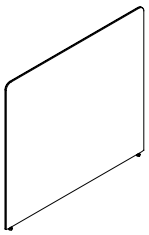

MHWBTWF Double-Sided End of Run Screen – Framed Fabric

Page 122

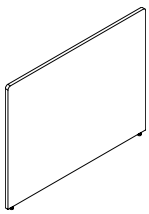

MHWBTWS Double-Sided End of Run Screen – Solid

Page 123

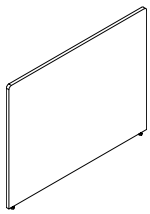

M H W B F Y D
Double-Sided Frame

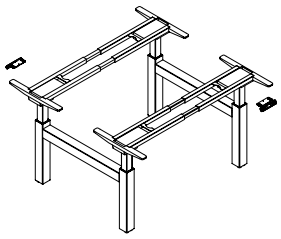

The Double-Sided Frame is used with two Double-Sided Worksurfaces to create a Height-Adjustable Bench workstation.

WHAT'S INCLUDED
Each frame includes 2 electric height-adjustable mechanisms, 2 digital switches, 4 height-adjustable leg columns, 2 leg braces, 2 telescopic top frames and 4 levelers.

NOTES
Requires two Double-Sided Rectangular Worksurfaces (MHWBWBD/MHWBWJD).

Digital Display Switch has three programmable settings with diagnostic capabilities.

All electrical base mechanisms have a 0.2 Watt resting power draw.

PRODUCT OPTIONS

Base Mechanism	Depth	Width	Switch	Finish	Country
2F Fixed Height	14, 16	12, 14, 15, 16, 18	**N** None	**83** Very White	**01** GB
9E Extended Electric-Extended (574mm - 1237mm)			**D** Display with Up/ Down Memory	**52** Ebony	**02** Schuko
9Y Extended Range (620mm - 1270mm)			**A** Toggle Display with Memory		**03** IND-EU
					04 Thailand
					05 USA
					06 Australia
					08 China
					09 India 3 Pin
					10 Philippines
					11 Indonesia

SAMPLE ORDER CODE

MHWBFYD 9E	16	14	D	83	01

CODE	PRICING
Base	
Fixed Height (2F)	2153
Extended Electric-Extended (9E)	3808
Extended Range (9Y)	3808

The Frame Link is used to join a Double-Sided Frame to another Double-Sided Frame.

WHAT'S INCLUDED
1 frame link, assembly hardware.

M H W B F B D
Double-Sided Base Link

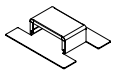

PRODUCT OPTIONS

Finish

83 Very White
52 Ebony

SAMPLE ORDER CODE

MHWBFBD 83

PRICING

92

M H W B F T L
Double-Sided Spine Tray – Low Capacity

The Double-Sided Spine Tray – Low Capacity carries cables across workstations.

WHAT'S INCLUDED
1 spine tray with bottom cover and mounting hardware.

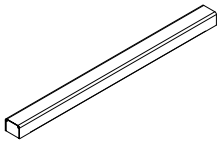

PRODUCT OPTIONS

Width	Spine Tray Finish
12, 14, 15, 16, 18	**83** Very White **52** Ebony

SAMPLE ORDER CODE

MHWBFTL 12	83

DIMENSIONS CODE	PRICING
W	
12	244
14	250
15	254
16	261
18	273

The Double-Sided Spine Tray – Medium Capacity carries cables across workstations and is used to support the power bar.

WHAT'S INCLUDED
1 spine tray with felt cover and mounting hardware.

MHWBFTM
Double-Sided Spine Tray – Medium Capacity

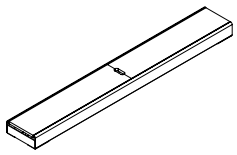

PRODUCT OPTIONS

Width	Spine Tray Top Cover	Spine Tray Finish	Spine Tray Cover Finish
12, 14, 15, 16, 18	**1** PET	**83** Very White **52** Ebony	**R5** Pewter **R6** Lunar

SAMPLE ORDER CODE

MHWBFTM 12	**1**	**83**	**R5**

DIMENSIONS CODE	PRICING
W	
12	296
14	314
15	322
16	330
18	347

M H W B F T H
Double-Sided Spine Tray – High Capacity

The Double-Sided Spine Tray – High Capacity carries cables across workstations and is used to support the power bar.

WHAT'S INCLUDED
1 spine tray with felt cover and mounting hardware.

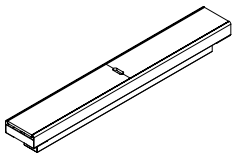

PRODUCT OPTIONS

Width	Spine Tray Top Cover	Spine Tray Finish	Spine Tray Cover Finish
12, 14, 15, 16, 18	**1** PET	**83** Very White **52** Ebony	**R5** Pewter **R6** Lunar

SAMPLE ORDER CODE

MHWBFTH 12	**1**	**83**	**R5**

DIMENSIONS CODE	PRICING
W	
12	309
14	326
15	336
16	345
18	362

M H W B W B D

Double-Sided Rectangular Worksurface with Square Corners

The Double-Sided Rectangular Worksurface with Square Corners is used with the Double-Sided Frame.

WHAT'S INCLUDED
1 worksurface.

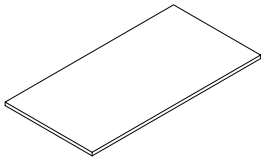

PRODUCT OPTIONS

Depth	Width	Cut Out	Grommet
07, 08	12, 14, 15, 16, 18	NN, 04, 06	**N** No Grommet **C** Grommet Center **L** Grommet Left **R** Grommet Right **B** Both Left and Right

SAMPLE ORDER CODE

MHWBWBD 07	**14**	**04**	**C**

PRODUCT OPTIONS CONTINUED

Surface Finish	Edge Trim Style	Grommet Finish	Access Door Finish
Source Laminate Foundation Laminate	**6** Straight Trim	**83** Very White **52** Ebony	**83** Very White **52** Ebony Accent

SAMPLE ORDER CODE CONTINUED

YQ	**6**	**83**	**83**

See pricing in the following page.

M H W B W B D

Double-Sided Rectangular Worksurface with Square Corners (Continued)

DIMENSIONS CODE — **PRICING**

NONE (NN) CUT OUT

D	W	NO (N) GROMMET		CENTER (C), LEFT (L), RIGHT (R) GROMMET		BOTH (B) GROMMET	
		Source Laminate	Foundation Laminate	Source Laminate	Foundation Laminate	Source Laminate	Foundation Laminate
07	12	497	793	567	862	636	931
07	14	515	821	584	891	654	960
07	15	527	837	597	906	666	976
07	16	538	851	607	921	677	990
07	18	557	900	627	970	697	1039
08	12	497	791	567	861	636	931
08	14	515	821	584	891	654	960
08	15	538	851	607	921	677	990
08	16	565	882	634	952	704	1022
08	18	581	919	650	988	719	1058

400 MM (04) CUT OUT

D	W	NO (N) GROMMET		LEFT (L), RIGHT (R) GROMMET		BOTH (B) GROMMET	
		Source Laminate	Foundation Laminate	Source Laminate	Foundation Laminate	Source Laminate	Foundation Laminate
07	12	497	793	567	862	636	931
07	14	515	821	584	891	654	960
07	15	527	837	597	906	666	976
07	16	538	851	607	921	677	990
07	18	557	900	627	970	697	1039
08	12	497	791	567	861	636	931
08	14	515	821	584	891	654	960
08	15	538	851	607	921	677	990
08	16	565	882	634	952	704	1022
08	18	581	919	650	988	719	1058

600 MM (06) CUT OUT

D	W	NO (N) GROMMET		LEFT (L), RIGHT (R) GROMMET		BOTH (B) GROMMET	
		Source Laminate	Foundation Laminate	Source Laminate	Foundation Laminate	Source Laminate	Foundation Laminate
07	14	515	821	584	891	654	960
07	15	527	837	597	906	666	976
07	16	538	851	607	921	677	990
07	18	557	900	627	970	697	1039
08	14	515	821	584	891	654	960
08	15	538	851	607	921	677	990
08	16	565	882	634	952	704	1022
08	18	581	919	650	988	719	1058

If Metal Access Door is specified for 400 mm (04), add 148
600 mm (06), add 162

If Accent Access Door is specified for 400 mm (04), add 158
600 mm (06), add 172

M H W B W J D

Double-Sided Rectangular Worksurface with Radius Corners

The Double-Sided Rectangular Worksurface with Radius Corners is used with the Double-Sided Frame.

WHAT'S INCLUDED
1 worksurface.

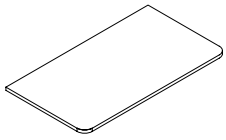

PRODUCT OPTIONS

Depth	Width	Cut Out	Grommet
07, 08	12, 14, 15, 16, 18	NN, 04, 06	**N** No Grommet **C** Grommet Center **L** Grommet Left **R** Grommet Right **B** Both Left and Right

SAMPLE ORDER CODE

MHWBWJD 07	14	04	C

PRODUCT OPTIONS CONTINUED

Surface Finish	Edge Trim Style	Edge Bend Finish	Grommet Finish	Access Door Finish
Source Laminate Foundation Laminate	**6** Straight Trim	**1** Matching **2** Black	**83** Very White **52** Ebony	**83** Very White **52** Ebony Accent

SAMPLE ORDER CODE CONTINUED

YQ	6	1	83	83

See pricing in the following page.

M H W B W J D

Double-Sided Rectangular Worksurface with Radius Corners (Continued)

DIMENSIONS CODE

PRICING

NONE (NN) CUT OUT

D	W	NO (N) GROMMET		CENTER (C), LEFT (L), RIGHT (R) GROMMET		BOTH (B) GROMMET	
		Source Laminate	Foundation Laminate	Source Laminate	Foundation Laminate	Source Laminate	Foundation Laminate
07	12	497	793	567	862	636	931
07	14	515	821	584	891	654	960
07	15	527	837	597	906	666	976
07	16	538	851	607	921	677	990
07	18	557	900	627	970	697	1039
08	12	497	791	567	861	636	931
08	14	515	821	584	891	654	960
08	15	538	851	607	921	677	990
08	16	565	882	634	952	704	1022
08	18	581	919	650	988	719	1058

400 MM (04) CUT OUT

D	W	NO (N) GROMMET		LEFT (L), RIGHT (R) GROMMET		BOTH (B) GROMMET	
		Source Laminate	Foundation Laminate	Source Laminate	Foundation Laminate	Source Laminate	Foundation Laminate
07	12	497	793	567	862	636	931
07	14	515	821	584	891	654	960
07	15	527	837	597	906	666	976
07	16	538	851	607	921	677	990
07	18	557	900	627	970	697	1039
08	12	497	791	567	861	636	931
08	14	515	821	584	891	654	960
08	15	538	851	607	921	677	990
08	16	565	882	634	952	704	1022
08	18	581	919	650	988	719	1058

600 MM (06) CUT OUT

D	W	NO (N) GROMMET		LEFT (L), RIGHT (R) GROMMET		BOTH (B) GROMMET	
		Source Laminate	Foundation Laminate	Source Laminate	Foundation Laminate	Source Laminate	Foundation Laminate
07	14	515	821	584	891	654	960
07	15	527	837	597	906	666	976
07	16	538	851	607	921	677	990
07	18	557	900	627	970	697	1039
08	14	515	821	584	891	654	960
08	15	538	851	607	921	677	990
08	16	565	882	634	952	704	1022
08	18	581	919	650	988	719	1058

If Metal Access Door is specified for 400 mm (04), add 148
600 mm (06), add 162

If Accent Access Door is specified for 400 mm (04), add 158
600 mm (06), add 172

M H W B C D X

Double-Sided Desk Edge Screen – Infinity

The Double-Sided Desk Edge Screen – Infinity attaches to the worksurface and provides casual privacy and space division.

WHAT'S INCLUDED
1 screen with mounting bracket and hardware.

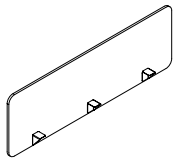

PRODUCT OPTIONS

Height	Width	Screen Finish	Bracket Finish
11, 13	12, 14, 15, 16, 18	Panel Fabric Upholstery Fabric	**83** Very White **52** Ebony

SAMPLE ORDER CODE

MHWBCDX 13	12	B203	83

DIMENSIONS CODE

PRICING

H	W	Fabric A/COM	Gr. 1	Gr. 2	Gr. 3	Gr. 4	Gr. 5	Gr. 6	Gr. 7
11	12	866	879	898	879	879	907	917	1028
11	14	872	888	907	888	888	918	928	1049
11	15	886	901	925	901	901	936	948	1087
11	16	892	910	935	910	910	948	960	1109
11	18	906	927	955	927	927	969	982	1150
13	12	906	926	953	926	926	968	981	1149
13	14	916	938	969	938	938	983	999	1179
13	15	934	959	995	959	959	1011	1029	1235
13	16	945	972	1009	972	972	1028	1047	1270
13	18	965	997	1038	997	997	1059	1080	1331

The Double-Sided Spine Screen – Beveled Fabric attaches to the bench frame and provides casual privacy and space division.

WHAT'S INCLUDED
1 screen with mounting bracket and hardware.

MHWBCTC
Double-Sided Spine Screen – Beveled Fabric

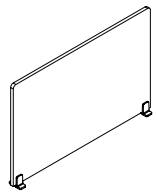

PRODUCT OPTIONS

Gap	Height	Depth	Screen Finish	Bracket Finish
Y Yes	11, 13	12, 14, 15, 16, 18	Panel Fabric	**83** Very White
N No				**52** Ebony

SAMPLE ORDER CODE

MHWBCTC Y	13	12	B203	83

DIMENSIONS CODE

H	W
11	12
11	14
11	15
11	16
11	18
13	12
13	14
13	15
13	16
13	18

PRICING

Fabric A/COM	Gr. 1	Gr. 2	Gr. 3	Gr. 4	Gr. 5	Gr. 6	Gr. 7
525	545	571	545	545	583	597	753
589	611	638	611	611	653	666	836
623	646	678	646	646	695	710	902
638	664	699	664	664	716	734	941
677	706	745	706	706	765	784	1017
675	714	765	714	714	791	817	1127
823	865	920	865	865	949	977	1313
869	918	981	918	918	1013	1046	1431
900	952	1022	952	952	1057	1090	1504
960	1018	1096	1018	1018	1136	1174	1641

M H W B C T F

Double-Sided Spine Screen – Framed Fabric

The Double-Sided Spine Screen – Framed Fabric attaches to the bench frame and provides casual privacy and space division.

WHAT'S INCLUDED
1 screen with mounting bracket and hardware.

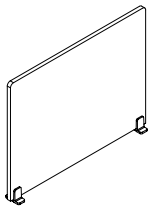

PRODUCT OPTIONS

Gap	Height	Depth	Screen Finish	Bracket Finish	Frame Finish
Y Yes	11, 13	12, 14, 15, 16, 18	Panel Fabric	**83** Very White	**83** Very White
N No				**52** Ebony	**52** Ebony

SAMPLE ORDER CODE

MHWBCTF Y	13	12	B203	83	52

DIMENSIONS CODE

PRICING

H	W	Fabric A/COM	Gr. 1	Gr. 2	Gr. 3	Gr. 4	Gr. 5	Gr. 6	Gr. 7
11	12	575	589	617	589	589	630	645	811
11	14	586	601	630	601	601	646	660	842
11	15	635	653	687	653	653	705	723	929
11	16	647	665	703	665	665	720	739	962
11	18	690	712	754	712	712	774	795	1046
13	12	758	786	842	786	786	870	898	1231
13	14	780	810	870	810	810	900	930	1294
13	15	844	878	947	878	878	981	1016	1431
13	16	867	904	978	904	904	1015	1052	1497
13	18	944	985	1068	985	985	1110	1152	1655

The Double-Sided Spine Screen – Solid attaches to the bench frame and provides casual privacy and space division.

WHAT'S INCLUDED
1 screen with mounting bracket and hardware.

MHWBCTS
Double-Sided Spine Screen – Solid

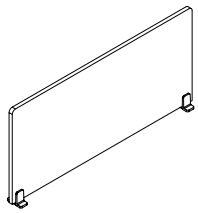

PRODUCT OPTIONS

Gap	Height	Depth	Screen Finish	Edge Trim Style	Bracket Finish
Y Yes	11, 13	12, 14, 15, 16, 18	Source Laminate	**6** Straight Trim	**83** Very White
N No			Foundation Laminate		**52** Ebony

SAMPLE ORDER CODE

MHWBCTS Y	13	12	YQ	6	83

DIMENSIONS CODE

H	W
11	12
11	14
11	15
11	16
11	18
13	12
13	14
13	15
13	16
13	18

PRICING

Source Laminate	Foundation Laminate
581	866
614	987
654	1051
689	1114
764	1243
680	1121
764	1243
814	1325
860	1407
956	1572

M H W B E C D
Double-Sided Cable Riser

The Double-Sided Cable Riser is used to route power and data cables into the workstation from the floor.

WHAT'S INCLUDED
1 cable riser with mounting hardware.

NOTES
Supports Power Bar 3-Gang or Hardwire 3-Gang.

PRODUCT OPTIONS

Plug Boxes	Cover Finish
0 None	**83** Very White
1 Hard Wire 3-Gang	**52** Ebony
2 Powerbox 3-Gang (two Power, one Blanking)	

SAMPLE ORDER CODE

MHWBECD 2	**83**

PRICING

No Plug	Hard Wire 3-Gang	Powerbox 3-Gang
273	302	302

MHWBTWC
Double-Sided End of Run Screen – Beveled Fabric

The Double-Sided End of Run Screen – Beveled Fabric mounts directly to the bench frame structure to create a physical separation between the bench and the corridor in a double-sided bench application.

WHAT'S INCLUDED
1 screen with mounting bracket and hardware.

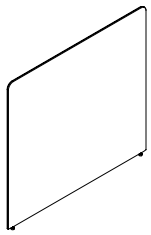

PRODUCT OPTIONS

Height	Depth	Screen Finish	Bracket Finish
11, 13	14, 16	Panel Fabrics	**83** Very White **52** Ebony

SAMPLE ORDER CODE

MHWBTWC 13	**07**	**B203**	**83**

DIMENSIONS CODE

H	W
11	14
11	16
13	14
13	16

PRICING

Fabric A/COM	Gr. 1	Gr. 2	Gr. 3	Gr. 4	Gr. 5	Gr. 6	Gr. 7
995	1042	1107	1042	1042	1139	1171	1555
1119	1173	1247	1173	1173	1283	1320	1760
1139	1187	1251	1187	1187	1282	1314	1699
1283	1338	1412	1338	1338	1447	1485	1925

M H W B T W F
Double-Sided End of Run Screen – Framed Fabric

The Double-Sided End of Run Screen – Framed Fabric mounts directly to the bench frame structure to create a physical separation between the bench and the corridor in a double-sided bench application.

WHAT'S INCLUDED
1 screen with mounting bracket and hardware.

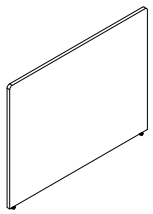

PRODUCT OPTIONS

Height	Depth	Screen Finish	Bracket Finish	Frame Finish
11, 13	14, 16	Panel Fabrics	**83** Very White **52** Ebony	**83** Very White **52** Ebony

SAMPLE ORDER CODE

MHWBTWF 13	**14**	**B203**	**83**	**60**

DIMENSIONS CODE

H	W
11	14
11	16
13	14
13	16

PRICING

Fabric A/COM	Gr. 1	Gr. 2	Gr. 3	Gr. 4	Gr. 5	Gr. 6	Gr. 7
1218	1252	1322	1252	1252	1356	1391	1805
1262	1302	1381	1302	1302	1420	1461	1934
1372	1407	1476	1407	1407	1512	1545	1959
1334	1373	1452	1373	1373	1493	1532	2006

MHWBTWS
Double-Sided End of Run Screen – Solid

The Double-Sided End of Run Screen – Solid mounts directly to the bench frame structure to create a physical separation between the bench and the corridor in a double-sided bench application.

WHAT'S INCLUDED
1 screen with mounting bracket and hardware.

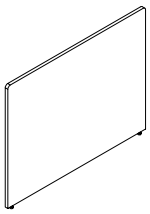

PRODUCT OPTIONS

Height	Depth	Screen Finish	Edge Trim Style	Bracket Finish
11, 13	14, 16	Source Laminate Foundation Laminate	**6** Straight Trim	**83** Very White **52** Ebony

SAMPLE ORDER CODE

MHWBTWS 13	**14**	**YQ**	**6**	**83**

DIMENSIONS CODE

H	W
11	14
11	16
13	14
13	16

PRICING

Source Laminate	Foundation Laminate
899	1459
1009	1649
1086	1777
1221	2015

hispace single-sided height-adjustable bench

product map

MHWBFYS Single-Sided Frame

Page 128

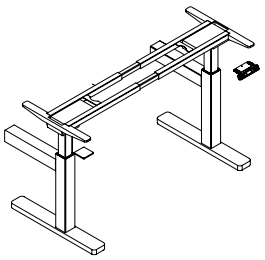

MHWBFSC Single-Sided Frame Weldment Cover

Page 129

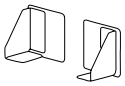

MHWBFBS Single-Sided Base Link

Page 130

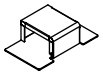

MHWBFSL Single-Sided Spine Tray – Low Capacity

Page 131

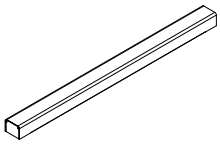

MHWBFSM Single-Sided Spine Tray – Medium Capacity

Page 132

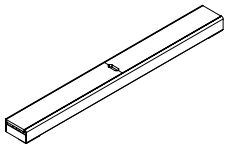

MHWBFSH Single-Sided Spine Tray – High Capacity

Page 133

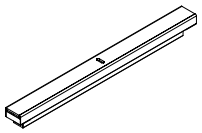

MHWBWBS Single-Sided Rectangular Worksurface with Square Corners

Page 134

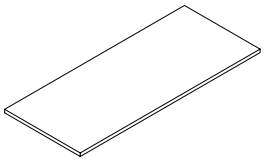

MHWBWJS Single-Sided Rectangular Worksurface with Radius Corners

Page 136

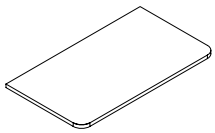

MHWBECE Single-Sided Cable Riser – End

Page 138

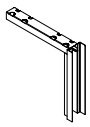

MHWBECM Single-Sided Cable Riser – Mid

Page 139

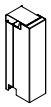

MHWBLSC Single-Sided Corridor Screen – Beveled Fabric

Page 140

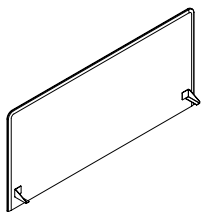

MHWBLSCF Single-Sided Corridor Floor Screen – Beveled Fabric

Page 141

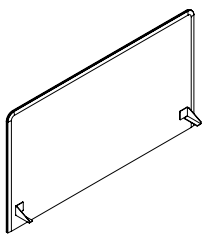

product map (continued)

MHWBLSF Single-Sided Corridor Screen – Framed Fabric

Page 142

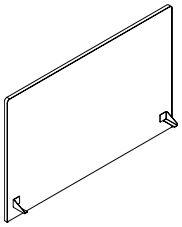

MHWBLSFF Single-Sided Corridor Floor Screen – Framed Fabric

Page 143

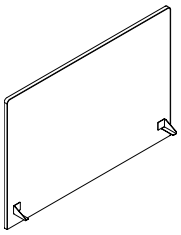

MHWBLSS Single-Sided Corridor Screen – Solid

Page 144

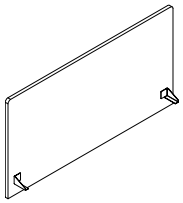

MHWBLSSF Single-Sided Corridor Floor Screen – Solid

Page 145

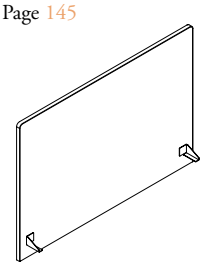

MHWBFWK Single-Sided Leveler Extension Blocks

Page 146

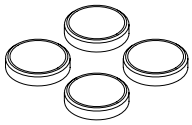

MHWBLBS Single-Sided Corridor Screen Alignment Clip - Solid

Page 147

M H W B F Y S
Single-Sided Frame

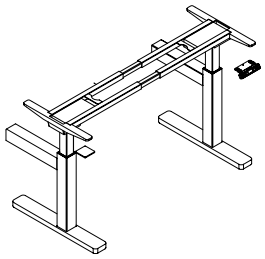

The Single-Sided Frame is used with two Single-Sided Worksurfaces to create a Height-Adjustable Bench workstation.

WHAT'S INCLUDED
Each frame includes 1 electric height-adjustable mechanisms, 1 digital switch, 2 height-adjustable leg columns, 2 leg braces, 1 telescopic top frame and 2 feet.

NOTES
Requires one Single-Sided Rectangular Worksurfaces (MHWBWBS/MHWBWJS).

Digital Display Switch has three programmable settings with diagnostic capabilities.

All electrical base mechanisms have a 0.2 watt resting power draw.

PRODUCT OPTIONS

Base Mechanism	Depth	Width	Switch	Finish	Country
2F Fixed Height	07, 08	12, 14, 15, 16, 18	**N** None	**83** Very White	**01** GB
9E Extended Electric-Extended (574mm - 1237mm)			**D** Display with Up/ Down Memory	**52** Ebony	**02** Schuko
9Y Extended Range (620mm - 1270mm)			**A** Toggle Display with Memory		**03** IND-EU
					04 Thailand
					05 USA
					06 Australia
					08 China
					09 India 3 Pin
					10 Philippines
					11 Indonesia

SAMPLE ORDER CODE

MHWBFYS 9E	07	14	D	83	01

CODE **PRICING**

Base	
Fixed Height (2F)	1257
Extended Electric-Extended (9E)	2060
Extended Range (9Y)	2060

M H W B F S C
Single-Sided Frame Weldment Cover

The Single-Sided Frame Weldment Cover is used to the cover the holes for screen mounting in the event there are no screens in the a single-sided application.

WHAT'S INCLUDED
2 weldment covers.

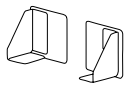

PRODUCT OPTIONS

Finish

83 Very White
52 Ebony

SAMPLE ORDER CODE

MHWBFSC 83

PRICING

70

M H W B F B S
Single-Sided Base Link

The Single-Sided Base Link is used to join a Single-Sided Frame to another Single-Sided Frame.

WHAT'S INCLUDED
1 frame link, assembly hardware.

PRODUCT OPTIONS

Finish
83 Very White
52 Ebony

SAMPLE ORDER CODE

MHWBFBS 83

PRICING

92	

The Single-Sided Spine Tray – Low Capacity carries cables across workstations.

WHAT'S INCLUDED
1 spine tray with bottom cover and mounting hardware.

M H W B F S L
Single-Sided Spine Tray – Low Capacity

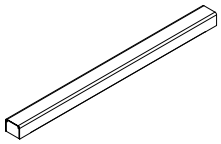

PRODUCT OPTIONS

Width	Spine Tray Finish
12, 14, 15, 16, 18	**83** Very White **52** Ebony

SAMPLE ORDER CODE

MHWBFSL 12	83

DIMENSIONS CODE	PRICING
W	
12	228
14	234
15	238
16	240
18	245

M H W B F S M
Single-Sided Spine Tray – Medium Capacity

The Single-Sided Spine Tray – Medium Capacity carries cables across workstations and is used to support power bar.

WHAT'S INCLUDED
1 spine tray with felt cover and mounting hardware.

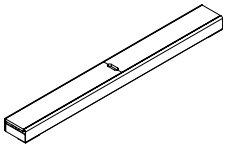

PRODUCT OPTIONS

Width	Spine Tray Top Cover	Spine Tray Finish	Spine Tray Cover Finish
12, 14, 15, 16, 18	**1** Smooth Felt	**83** Very White **52** Ebony	**R5** Pewter **R6** Lunar

SAMPLE ORDER CODE

MHWBFSM 12	**1**	**83**	**R5**

DIMENSIONS CODE	PRICING
W	
12	244
14	252
15	256
16	261
18	269

The Single-Sided Spine Tray – High Capacity carries cables across workstations and used to support power bar.

WHAT'S INCLUDED
1 spine tray with felt cover and mounting hardware.

MHWBFSH
Single-Sided Spine Tray – High Capacity

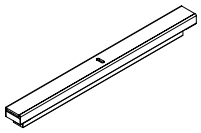

PRODUCT OPTIONS

Width	Spine Tray Top Cover	Spine Tray Finish	Spine Tray Cover Finish
12, 14, 15, 16, 18	**1** Smooth Felt	**83** Very White **52** Ebony	**R5** Pewter **R6** Lunar

SAMPLE ORDER CODE

MHWBFSH 12	**1**	**83**	**R5**

DIMENSIONS CODE	PRICING
W	
12	251
14	263
15	269
16	274
18	285

M H W B W B S
Single-Sided Rectangular Worksurface with Square Corners

The Single-Sided Rectangular Worksurface with Square Corners is used with the Double-Sided Frame.

WHAT'S INCLUDED
1 worksurface.

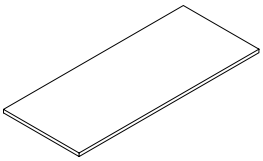

PRODUCT OPTIONS

Depth	Width	Cut Out	Grommet
07, 08	12, 14, 15, 16, 18	NN, 04, 06	**N** No Grommet **C** Grommet Center **L** Grommet Left **R** Grommet Right **B** Both Left and Right

SAMPLE ORDER CODE

MHWBWBS 07	**14**	**04**	**C**

PRODUCT OPTIONS CONTINUED

Surface Finish	Edge Trim Style	Grommet Finish	Access Door Finish
Source Laminate Foundation Laminate	**6** Straight Trim	**83** Very White **52** Ebony	**83** Very White **52** Ebony Accent

SAMPLE ORDER CODE CONTINUED

YQ	**6**	**83**	**83**

See pricing in the following page.

M H W B W B S

Single-Sided Rectangular Worksurface with Square Corners (Continued)

DIMENSIONS CODE | **PRICING**

NONE (NN) CUT OUT

D	W	NO (N) GROMMET		CENTER (C), LEFT (L), RIGHT (R) GROMMET		BOTH (B) GROMMET	
		Source Laminate	Foundation Laminate	Source Laminate	Foundation Laminate	Source Laminate	Foundation Laminate
07	12	497	793	567	862	636	931
07	14	515	821	584	891	654	960
07	15	527	837	597	906	666	976
07	16	538	851	607	921	677	990
07	18	557	900	627	970	697	1039
08	12	497	791	567	861	636	931
08	14	515	821	584	891	654	960
08	15	538	851	607	921	677	990
08	16	565	882	634	952	704	1022
08	18	581	919	650	988	719	1058

400 MM (04) CUT OUT

		NO (N) GROMMET		LEFT (L), RIGHT (R) GROMMET		BOTH (B) GROMMET	
		Source Laminate	Foundation Laminate	Source Laminate	Foundation Laminate	Source Laminate	Foundation Laminate
07	12	497	793	567	862	636	931
07	14	515	821	584	891	654	960
07	15	527	837	597	906	666	976
07	16	538	851	607	921	677	990
07	18	557	900	627	970	697	1039
08	12	497	791	567	861	636	931
08	14	515	821	584	891	654	960
08	15	538	851	607	921	677	990
08	16	565	882	634	952	704	1022
08	18	581	919	650	988	719	1058

600 MM (06) CUT OUT

		NO (N) GROMMET		LEFT (L), RIGHT (R) GROMMET		BOTH (B) GROMMET	
		Source Laminate	Foundation Laminate	Source Laminate	Foundation Laminate	Source Laminate	Foundation Laminate
07	14	515	821	584	891	654	960
07	15	527	837	597	906	666	976
07	16	538	851	607	921	677	990
07	18	557	900	627	970	697	1039
08	14	515	821	584	891	654	960
08	15	538	851	607	921	677	990
08	16	565	882	634	952	704	1022
08	18	581	919	650	988	719	1058

If Metal Access Door is specified, add 148
If Accent Access Door is specified, add 158

M H W B W J S
Single-Sided Rectangular Worksurface with Radius Corners

The Single-Sided Rectangular Worksurface with Radius Corners is used with the Double-Sided Frame.

WHAT'S INCLUDED
1 worksurface.

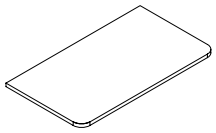

PRODUCT OPTIONS

Depth	Width	Cut Out	Grommet
07, 08	12, 14, 15, 16, 18	NN, 04, 06	**N** No Grommet **C** Grommet Center **L** Grommet Left **R** Grommet Right **B** Both Left and Right

SAMPLE ORDER CODE

MHWBWJS 07	**14**	**04**	**C**

PRODUCT OPTIONS CONTINUED

Surface Finish	Edge Trim Style	Edge Bend Finish	Grommet Finish	Access Door Finish
Source Laminate Foundation Laminate	**6** Straight Trim	**1** Matching **2** Black	**83** Very White **52** Ebony	**83** Very White **52** Ebony Accent

SAMPLE ORDER CODE CONTINUED

YQ	**6**	**1**	**83**	**83**

See pricing in the following page.

M H W B W J S
Single-Sided Rectangular Worksurface with Radius Corners (Continued)

DIMENSIONS CODE | **PRICING**

NONE (NN) CUT OUT

D	W	NO (N) GROMMET		CENTER (C), LEFT (L), RIGHT (R) GROMMET		BOTH (B) GROMMET	
		Source Laminate	Foundation Laminate	Source Laminate	Foundation Laminate	Source Laminate	Foundation Laminate
07	12	497	793	567	862	636	931
07	14	515	821	584	891	654	960
07	15	527	837	597	906	666	976
07	16	538	851	607	921	677	990
07	18	557	900	627	970	697	1039
08	12	497	791	567	861	636	931
08	14	515	821	584	891	654	960
08	15	538	851	607	921	677	990
08	16	565	882	634	952	704	1022
08	18	581	919	650	988	719	1058

400 MM (04) CUT OUT

		NO (N) GROMMET		LEFT (L), RIGHT (R) GROMMET		BOTH (B) GROMMET	
		Source Laminate	Foundation Laminate	Source Laminate	Foundation Laminate	Source Laminate	Foundation Laminate
07	12	497	793	567	862	636	931
07	14	515	821	584	891	654	960
07	15	527	837	597	906	666	976
07	16	538	851	607	921	677	990
07	18	557	900	627	970	697	1039
08	12	497	791	567	861	636	931
08	14	515	821	584	891	654	960
08	15	538	851	607	921	677	990
08	16	565	882	634	952	704	1022
08	18	581	919	650	988	719	1058

600 MM (06) CUT OUT

		NO (N) GROMMET		LEFT (L), RIGHT (R) GROMMET		BOTH (B) GROMMET	
		Source Laminate	Foundation Laminate	Source Laminate	Foundation Laminate	Source Laminate	Foundation Laminate
07	14	515	821	584	891	654	960
07	15	527	837	597	906	666	976
07	16	538	851	607	921	677	990
07	18	557	900	627	970	697	1039
08	14	515	821	584	891	654	960
08	15	538	851	607	921	677	990
08	16	565	882	634	952	704	1022
08	18	581	919	650	988	719	1058

If Metal Access Door is specified, add 148
If Accent Access Door is specified, add 158

M H W B E C E
Single-Sided Cable Riser – End

The Single-Sided Cable Riser – End is used to route power and data cables into the workstation from the floor when there is no power bar requirement.

WHAT'S INCLUDED
1 cable riser with mounting hardware.

NOTES
Cannot support power bar.

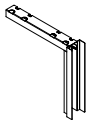

PRODUCT OPTIONS

Depth	Finish
07, 08	**83** Very White **52** Ebony

SAMPLE ORDER CODE

MHWBECE 07	83

DIMENSIONS CODE

D
07
08

PRICING

94
99

MHWBECM
Single-Sided Cable Riser – Mid

The Single-Sided Cable Riser – Mid is used to route power and data cables into the workstation from the floor.

WHAT'S INCLUDED
1 cable riser with mounting hardware.

NOTES
Able to support Power Bar 3-Gang or Hardwire 3-Gang.

PRODUCT OPTIONS

Plug Mount	Cover Finish
0 None	**83** Very White
1 Hard Wire 3-Gang	**52** Ebony
2 Powerbox 3-Gang (two power, one blanking)	

SAMPLE ORDER CODE

MHWBECM 2	83

PRICING

No Plug	Hard Wire 3-Gang	Powerbox 3-Gang
141	155	155

M H W B L S C

Single-Sided Corridor Screen – Beveled Fabric

The Single-Sided Corridor Screen – Beveled Fabric attaches to the single-sided bench frame and provides casual privacy and space division between aisle way.

WHAT'S INCLUDED
1 screen with mounting bracket and hardware.

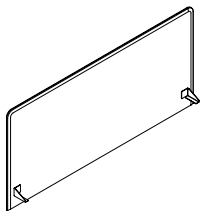

PRODUCT OPTIONS

Height	Width	Screen Finish
11, 13	12, 14, 15, 16, 18	Panel Fabrics

SAMPLE ORDER CODE

MHWBLSC 13	**12**	**B203**

DIMENSIONS CODE

PRICING

H	W	Fabric A/COM	Gr. 1	Gr. 2	Gr. 3	Gr. 4	Gr. 5	Gr. 6	Gr. 7
11	12	675	714	765	714	714	791	817	1127
11	14	823	865	920	865	865	949	977	1313
11	15	869	918	981	918	918	1013	1046	1431
11	16	900	952	1022	952	952	1057	1090	1504
11	18	960	1018	1096	1018	1018	1136	1174	1641
13	12	763	800	852	800	800	878	904	1215
13	14	846	889	945	889	889	972	1001	1338
13	15	918	965	1030	965	965	1062	1093	1479
13	16	973	1025	1093	1025	1025	1128	1163	1576
13	18	1084	1143	1221	1143	1143	1259	1299	1765

MHWBLSCF
Single-Sided Corridor Floor Screen – Beveled Fabric

hiSpace World Wide Single-Sided Corridor Floor Screen - Beveled Fabric can be specified when more enclosure is desired as the bottom edge reaches the floor with levellers. hiSpace World Wide Single-Sided Corridor Floor Screen - Beveled Fabric attaches to the single-sided bench frame and provides casual privacy and space division between the bench and aisle way.

WHAT'S INCLUDED
1 screen with mounting bracket and hardware.

NOTES
Bracket defaults to black.

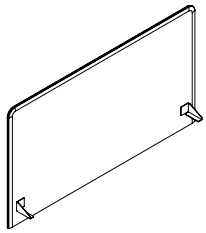

PRODUCT OPTIONS

Height	Width	Screen Finish
11, 13	12, 14, 15, 16, 18	Panel Fabrics

SAMPLE ORDER CODE

MHWBLSCF 13	12	YB004

DIMENSIONS CODE

PRICING

H	W	Fabric A/COM	Gr. 1	Gr. 2	Gr. 3	Gr. 4	Gr. 5	Gr. 6	Gr. 7
11	12	852	878	929	878	878	955	980	1286
11	14	907	936	992	936	936	1021	1050	1396
11	15	959	991	1056	991	991	1088	1120	1504
11	16	1013	1049	1119	1049	1049	1154	1190	1613
11	18	1067	1106	1182	1106	1106	1221	1259	1721
13	12	914	939	990	939	939	1016	1042	1349
13	14	1190	1219	1277	1219	1219	1305	1334	1679
13	15	1243	1275	1339	1275	1275	1371	1403	1787
13	16	1296	1332	1403	1332	1332	1439	1473	1897
13	18	1375	1413	1490	1413	1413	1528	1567	2028

M H W B L S F

Single-Sided Corridor Screen – Framed Fabric

The Single-Sided Corridor Screen – Framed Fabric attaches to the single-sided bench frame and provides casual privacy and space division between aisle way.

WHAT'S INCLUDED
1 screen with mounting bracket and hardware.

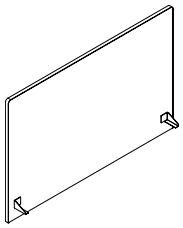

PRODUCT OPTIONS

Height	Width	Screen Finish	Frame Finish
11, 13	12, 14, 15, 16, 18	Panel Fabrics Upholstery Fabrics	**83** Very White **52** Ebony Accent

SAMPLE ORDER CODE

MHWBLSF 13	**12**	**B203**	**83**

DIMENSIONS CODE

PRICING

		PANEL FABRICS			UPHOLSTERY FABRICS			
H	W	A/ COM	Gr. 1	Gr. 2	COM/ Gr. 1	Gr. 2	Gr. 3	Gr. 7
11	12	806	834	889	834	917	945	1279
11	14	826	856	918	856	948	978	1340
11	15	894	928	997	928	1031	1066	1480
11	16	917	953	1028	953	1064	1101	1547
11	18	1001	1042	1126	1042	1168	1210	1713
13	12	861	889	945	889	972	1000	1334
13	14	881	911	972	911	1003	1033	1395
13	15	962	997	1066	997	1100	1136	1550
13	16	986	1023	1097	1023	1134	1171	1616
13	18	1056	1098	1181	1098	1223	1264	1767

If Accent Frame Finish is specified, add 27

MHWBLSFF
Single-Sided Corridor Floor Screen – Framed Fabric

hiSpace World Wide Single-Sided Corridor Floor Screen - Framed Fabric can be specified when more enclosure is desired as the bottom edge reaches the floor with levellers. hiSpace World Wide Single-Sided Corridor Floor Screen - Framed Fabric attaches to the single-sided bench frame and provides casual privacy and space division between the bench and aisle way.

WHAT'S INCLUDED
1 screen with mounting bracket and hardware.

NOTES
Bracket defaults to black.

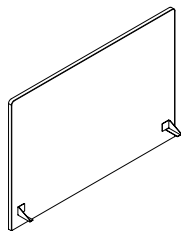

PRODUCT OPTIONS

Height	Width	Screen Finish	Frame Finish
11, 13	12, 14, 15, 16, 18	Panel Fabrics	**83** Very White **52** Ebony Accent

SAMPLE ORDER CODE

MHWBLSFF 13	**12**	**YB004**	**83**

DIMENSIONS CODE

H	W
11	12
11	14
11	15
11	16
11	18
13	12
13	14
13	15
13	16
13	18

PRICING

PANEL FABRICS			UPHOLSTERY FABRICS			
A/ COM	Gr. 1	Gr. 2	COM/ Gr. 1	Gr. 2	Gr. 3	Gr. 7
973	1001	1056	1001	1083	1111	1442
1071	1102	1164	1102	1195	1227	1600
1134	1169	1238	1169	1272	1306	1721
1198	1235	1312	1235	1350	1388	1844
1294	1336	1419	1336	1461	1502	1998
1046	1072	1128	1072	1156	1183	1513
1157	1188	1250	1188	1281	1312	1684
1224	1259	1328	1259	1362	1396	1810
1295	1334	1410	1334	1447	1486	1941
1409	1451	1533	1451	1574	1616	2112

M H W B L S S

Single-Sided Corridor Screen – Solid

The Single-Sided Corridor Screen – Solid attaches to the single-sided bench frame and provides casual privacy and space division between aisle way.

WHAT'S INCLUDED
1 screen with mounting bracket and hardware.

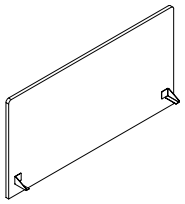

PRODUCT OPTIONS

Height	Width	Screen Finish	Edge Trim Style
11, 13	12, 14, 15, 16, 18	Source Laminate Foundation Laminate	**6** Straight Trim

SAMPLE ORDER CODE

MHWBLSS 13	**12**	**YQ**	**6**

DIMENSIONS CODE

H	W
11	12
11	14
11	15
11	16
11	18
13	12
13	14
13	15
13	16
13	18

PRICING

Source Laminate	Foundation Laminate
680	1121
764	1243
814	1325
860	1407
956	1572
777	1313
876	1435
932	1532
986	1626
1098	1818

MHWBLSSF
Single-Sided Corridor Floor Screen – Solid

hiSpace World Wide Single-Sided Corridor Floor Screen - Solid can be specified when more enclosure is desired as the bottom edge reaches the floor with levellers. hiSpace World Wide Single-Sided Corridor Floor Screen - Solid attaches to the single-sided bench frame and provides casual privacy and space division between the bench and aisle way.

WHAT'S INCLUDED
1 screen with mounting bracket and hardware.

NOTES
Bracket defaults to black.

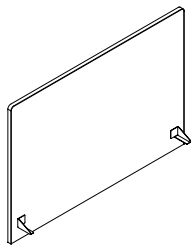

PRODUCT OPTIONS

Height	Width	Screen Finish	Edge Trim Style
11, 13	12, 14, 15, 16, 18	Source Laminate Foundation Laminate	**6** Straight Trim

SAMPLE ORDER CODE

MHWBLSSF 13	**12**	**YQ**	**6**

DIMENSIONS CODE

PRICING

H	W	Source Laminate	Foundation Laminate
11	12	385	468
11	14	413	502
11	15	447	545
11	16	487	595
11	18	502	613
13	12	445	542
13	14	593	727
13	15	601	736
13	16	611	748
13	18	625	767

M H W B F W K

Single-Sided Leveler Extension Blocks

The hiSpace World Wide Single-Sided Leveler Extension Blocks are used to increase the leveling capabilities on single-sided frames by increments of 1cm.

WHAT'S INCLUDED
Specified quantity of leveler blocks.

NOTES
It is not recommended to stack more than two leveler blocks under each table leveler.

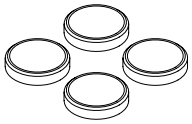

PRODUCT OPTIONS

Quantity	Finish
04, 32	**24** Greystone

SAMPLE ORDER CODE

MHWBFWK 04	24

CODE

Quantity
04
32

PRICING

31
242

MHWBLBS
Single-Sided Corridor Screen Alignment Clip - Solid

hiSpace World Wide Single-Sided Corridor Screen Alignment Clip is used to assist in alignment and gap control of side-by-side corridor screens.

WHAT'S INCLUDED
1 alignment clip, mounting hardware.

NOTES
Please ensure to predrill as this is a field installation and no pilot holes will be included on the screening

PRODUCT OPTIONS

Finish

83 Very White

52 Ebony

Accent

SAMPLE ORDER CODE

MHWBLBS 83

PRICING

Metal Finish	Accent Finish
57	60

hispace 120
height-adjustable bench

product map

MHWBFYT 120 Frame

Page 151

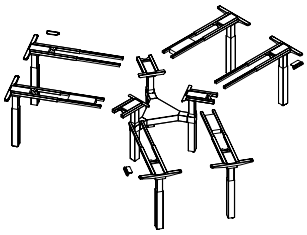

MHWBWBT 120 Worksurface with Square Corners

Page 152

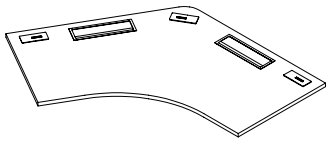

MHWBWJT 120 Worksurface with Radius Corners

Page 154

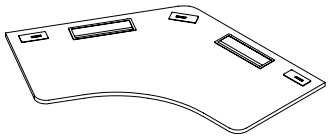

MHWBCAT 3-Way 120 Screen Aligner

Page 156

MHWBECMT 120 Cable Riser - Mid

Page 157

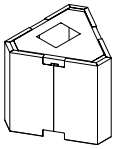

MHWBEWT 120 Wire Bridge

Page 158

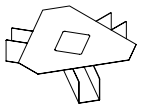

MHWBFYT
120 Frame

The 120 Frame is paired with 120 Worksurface with Square Corners (HWBWBT) or 120 Worksurface with Radius Corners (HWBWJT) to create a Height-Adjustable or Fixed Height 120 Bench Station.

WHAT'S INCLUDED

Each 120 Frame includes 3 bench stations, 9 leg columns (height-adjustable or fixed) with levelers, 6 cross channels, 3 end leg braces, 3 mid leg braces, 3 switches for height-adjustable stations, appropriate hardware.

NOTES

Switch is not included with fixed height option.

Requires three 120 Worksurfaces (MHWBWBT/MHWBWJT).

Include Covers/Gables to conceal leg braces.

All electric base mechanisms have a 0.2 W resting power draw and use a 240 V Universal control box (height-adjustable only).

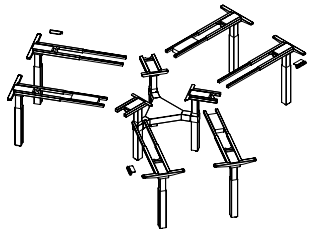

PRODUCT OPTIONS

Base Mechanism	Depth	Width	Switch	Finish	Country
2F Fixed Height	14, 16	12, 14, 15	**N** None	**83** Very White	**01** GB
9E Extended Electric-Extended (574mm - 1237mm)			**D** Display with Up/ Down Memory	**52** Ebony	**02** Schuko
9Y Extended Range (620mm - 1270mm)			**A** Toggle Display with Memory		**03** IND-EU
					04 Thailand
					05 USA
					06 Australia
					08 China
					09 India 3 Pin
					10 Philippines
					11 Indonesia

SAMPLE ORDER CODE

MHWBFYT 9E	16	14	D	83	01

CODE | **PRICING**

Base	
Fixed Height (2F)	5015
Extended Electric-Extended (9E)	8185
Extended Range (9Y)	8185

M H W B W B T

120 Worksurface with Square Corners

The 120 Worksurface with Square Corners is used with the 120 Frame.

WHAT'S INCLUDED
1 worksurface.

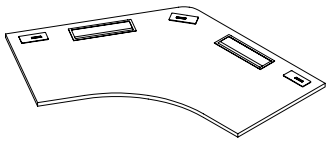

PRODUCT OPTIONS

Depth	Width	Access Door Size	Access Door Location	Grommet
07, 08	12, 14, 15	NN, 04, 06	**NN** None **LL** Left cut out **RR** Right cut out **BB** Both Left and Right cut out	**N** No Grommet **A** Left, Right and Center **B** Both Left and Right **L** Left **R** Right **C** Center

SAMPLE ORDER CODE

MHWBWBT 07	14	04	LL	C

PRODUCT OPTIONS CONTINUED

Surface Finish	Edge Trim Style	Edge Bend Finish	Grommet Finish	Access Door Finish
Source Laminate Foundation Laminate	**6** Straight Trim	**1** Matching Trim **2** Black Trim	**NN** None **83** Very White **52** Ebony	**NN** None **83** Very White **52** Ebony Accent

SAMPLE ORDER CODE CONTINUED

YQ	6	1	83	83

See pricing in the following page.

M H W B W B T

120 Worksurface with Square Corners (Continued)

DIMENSIONS CODE		PRICING	
D	W	Source Laminate	Foundation Laminate
07	12	1031	1493
07	14	1190	1726
07	15	1346	1965
08	12	1098	1594
08	14	1264	1833
08	15	1432	2085

If Access Door Cut Out is specified:
- Left or Right Access Door Cut-out, add 28
- Left & Right Access Door Cut-out, add 55

If Grommet Cut Out is specified:
- Left, Right or Center Grommet Cut-out, add 75
- Left & Right Grommet Cut-out, add 148
- Left, Right & Center Grommet Cut-out, add 222

If Metal Access Door is specified for 400 mm (04), add 125 each
600 mm (06), add 162 each
If Accent Access Door is specified for 400 mm (04), add 158 each
600 mm (06), add 172 each

M H W B W J T
120 Worksurface with Radius Corners

The 120 Worksurface with Radius Corners is used with the 120 Frame.

WHAT'S INCLUDED
1 worksurface.

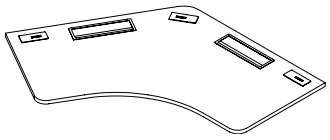

PRODUCT OPTIONS

Depth	Width	Access Door Size	Access Door Location	Grommet
07, 08	12, 14, 15	NN, 04, 06	**NN** None **LL** Left cut out **RR** Right cut out **BB** Both Left and Right cut out	**N** No Grommet **A** Left, Right and Center **B** Both Left and Right **L** Left **R** Right **C** Center

SAMPLE ORDER CODE

MHWBWJT 07	14	04	LL	C

PRODUCT OPTIONS CONTINUED

Surface Finish	Edge Trim Style	Edge Bend Finish	Grommet Finish	Access Door Finish
Source Laminate Foundation Laminate	**6** Straight Trim	**1** Matching Trim **2** Black Trim	**NN** None **83** Very White **52** Ebony	**NN** None **83** Very White **52** Ebony Accent

SAMPLE ORDER CODE CONTINUED

YQ	6	1	83	83

See pricing in the following page.

M H W B W J T
120 Worksurface with Radius Corners (Continued)

DIMENSIONS CODE		PRICING	
D	W	Source Laminate	Foundation Laminate
07	12	1031	1493
07	14	1190	1726
07	15	1346	1965
08	12	1098	1594
08	14	1264	1833
08	15	1432	2085

If Access Door Cut Out is specified:
- Left or Right Access Door Cut-out, add 28
- Left & Right Access Door Cut-out, add 55

If Grommet Cut Out is specified:
- Left, Right or Center Grommet Cut-out, add 75
- Left & Right Grommet Cut-out, add 148
- Left, Right & Center Grommet Cut-out, add 222

If Metal Access Door is specified for 400 mm (04), add 125 each
600 mm (06), add 162 each
If Accent Access Door is specified for 400 mm (04), add 158 each
600 mm (06), add 172 each

M H W B C A T
3-Way 120 Screen Aligner

The 3-Way 120 Screen Aligner is used to ensure even spacing between screens at the center of the workstation bench where the screens come together. Available in one height.

WHAT'S INCLUDED
One 3-Way 120 Screen Aligner

PRODUCT OPTIONS

Screen Type	Aligner Height	Finish
S Solid	11	**83** Very White
F Framed Fabric		**52** Ebony
B Beveled		Accent

SAMPLE ORDER CODE

MHWBCAT S	**11**	**83**

PRICING

Metal Finish	Accent Finish
135	147

The 120 Cable Riser is used to route/store power and data cables from the floor and spine tray.

WHAT'S INCLUDED
1 cable riser with mounting hardware.

M H W B E C M T
120 Cable Riser - Mid

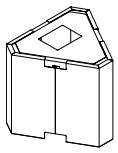

PRODUCT OPTIONS

Plug Boxes	Cover Finish
0 None	**83** Very White
1 Hard Wire 3-Gang	**52** Ebony
2 Powerbox 3-Gang (two Power, one Blanking)	

SAMPLE ORDER CODE

MHWBECMT 3	**83**

PRICING

None	3-Gang
337	371

M H W B E W T
120 Wire Bridge

The hiSpace World Wide 120 Wire Bridge is used to pass cables between three spine trays, specifically when a cable riser is not present at the junction.

WHAT'S INCLUDED
120 Wire bridge.

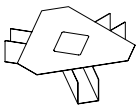

PRODUCT OPTIONS

Finish
83 Very White
52 Ebony

SAMPLE ORDER CODE

MHWBEWT 83

PRICING

149

hispace
universal components

product map

MHWBFTV Universal Spine Tray Cover

Page 162

MHWBEWV Wire Cover

Page 163

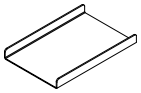

MHWBEWB Wire Bridge

Page 164

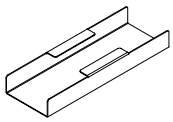

MHWBEUY Under Worksurface Cable Tray

Page 165

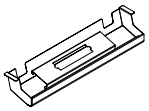

MHWBEEE Vertical Wire Carrier

Page 166

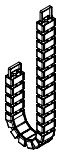

MHWBEEB Vertical Wire Carrier Bracket & Cover

Page 167

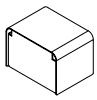

MHWBEWY Felt Cover Cable Organizer

Page 168

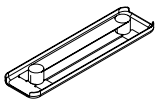

MHWBETP Power Bar Holder for Spine Trays

Page 169

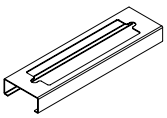

MHWBCGE End Gable

Page 170

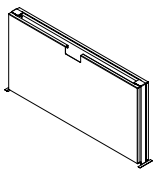

MHWBAWW Hanging Whiteboard

Page 171

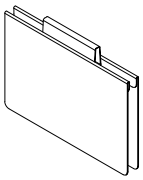

MHWBAWR Bag Drop

Page 172

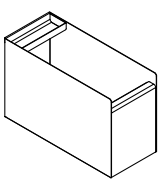

M H W B F T V
Universal Spine Tray Cover

The Universal Spine Tray Cover is used to the cover the holes for screen mounting or spine tray in the event there are no screens or spine tray in the double-sided application.

WHAT'S INCLUDED
2 covers.

PRODUCT OPTIONS

Finish

83 Very White
52 Ebony

SAMPLE ORDER CODE

MHWBFTV 83

PRICING

70

MHWBEWV
Wire Cover

The Wire Cover hides the exposed wires between the wire riser and the spine tray.

WHAT'S INCLUDED
1 wire cover.

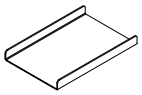

PRODUCT OPTIONS

Type	Finish
S Single-Sided	**83** Very White
D Double-Sided	**52** Ebony

SAMPLE ORDER CODE

MHWBEWV S	**83**

PRICING

34

M H W B E W B
Wire Bridge

The Wire Bridge provides wire management across two height-adjustable workstations.

WHAT'S INCLUDED
1 wire bridge.

NOTES
Attaches to the frame link.

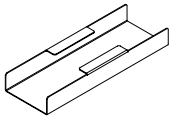

PRODUCT OPTIONS

Style	Finish
U Universal	**83** Very White
D Double-Sided	**52** Ebony

SAMPLE ORDER CODE

MHWBEWB U	**83**

PRICING

34

MHWBEUY
Under Worksurface Cable Tray

The Under Worksurface Cable Tray provides discrete wire management with a capability for run cable below the power module.

WHAT'S INCLUDED
1 cable tray and hardware.

NOTES
Tray is complete with holes which will allow for the mounting of Powerbox 4-Gang Power Bars or Hardwired.

Powerbox to be purchased separately.

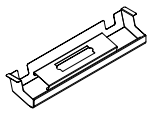

PRODUCT OPTIONS

Type	Nominal Size	Plug Mount	Finish
U Under Worksurface	04, 06	**0** None **1** Hard Wire 4-Gang **2** Powerbox 4-Gang	**83** Very White **52** Ebony

SAMPLE ORDER CODE

MHWBEUY U	**04**	**1**	**83**

DIMENSIONS CODE

Nominal Size	
04	141
06	151

PRICING

M H W B E E E
Vertical Wire Carrier

The Vertical Wire Carrier safely manages and conceals all vertical wires and cables.

WHAT'S INCLUDED
1 vertical wire carrier with mounting hardware.

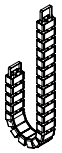

PRODUCT OPTIONS

Style	Finish
1 Standard Capacity - Perpendicular	**83** Very White
2 High Capacity - Perpendicular	**52** Ebony

SAMPLE ORDER CODE

MHWBEEE 1	**83**

PRICING

151

MHWBEEB
Vertical Wire Carrier Bracket & Cover

The Vertical Wire Carrier Bracket & Cover is fixed to the frame to support vertical wire carrier in the absents of spine tray.

WHAT'S INCLUDED
1 vertical wire carrier cover with mounting hardware.

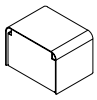

PRODUCT OPTIONS

Style	Finish
U Universal	**83** Very White **52** Ebony

SAMPLE ORDER CODE

MHWBEEB U	**83**

PRICING

115

M H W B E W Y
Felt Cover Cable Organizer

The Felt Cover Cable Organizer is used to hide the leg cable and control box.

WHAT'S INCLUDED
1 metal cable organizer spine, two wire looms and three velcro straps, felt cover (if specified), mounting hardware.

NOTES
Not applicable if grommet and flip up is specified.

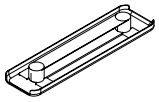

PRODUCT OPTIONS

Configuration
03 Large Cable Organizer with Felt Cover

SAMPLE ORDER CODE

MHWBEWY 03

PRICING

196

MHWBETP
Power Bar Holder for Spine Trays

The Power Bar Holder for Spine Trays is required when you need to specify power bar for medium and high capacity spine tray.

WHAT'S INCLUDED
1 power bar holder with hardware.

NOTES
Applicable for both single-sided and double-sided height-adjustable bench.

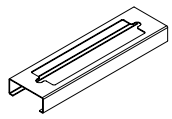

PRODUCT OPTIONS

Cut Out Type	Finish
1 Hard Wire 4-Gang	**83** Very White
2 Powerbox 4-Gang	**52** Ebony

SAMPLE ORDER CODE

MHWBETP 1	83

PRICING

47

M H W B C G E
End Gable

The End Gable attaches to the Bench Frame leg brace to create additional privacy between the bench and a corridor as well as a physical enclosure between adjustable leg columns to the floor.

WHAT'S INCLUDED
1 outer gable, 1 metal inner gable, mounting hardware.

NOTES
The inner gable always comes in Metal. Outer gable has selection of Metal, Felt or Solid.

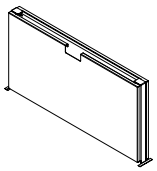

PRODUCT OPTIONS

Depth	Outer Finish	Cable Exit	Inner Finish
14, 16	**83** Very White	**Y** Yes	**83** Very White
	52 Ebony	**N** No	**52** Ebony
	R5 Pewter		
	R6 Lunar		
	Accent		
	Source Laminate		
	Foundation Laminate		

SAMPLE ORDER CODE

MHWBCGE 14	**52**	**Y**	**83**

DIMENSIONS CODE

PRICING

W	Metal	Accent	Source Laminate	Foundation Laminate	Smooth Felt
14	232	246	275	301	336
16	240	254	283	309	345

M H W B A W W
Hanging Whiteboard

The Hanging Whiteboard provides a writable surface for height-adjustable bench.

WHAT'S INCLUDED
1 hanging whiteboard.

NOTES
Attaches to the single-sided or double-sided screens.

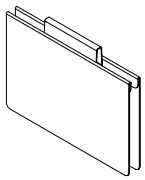

PRODUCT OPTIONS

Application	Screen Type
S Single-Sided	**C** Curved
D Double-Sided	**F** Framed
	S Solid
	X Infinity

SAMPLE ORDER CODE

MHWBAWW S	C

PRICING

Single-Sided	Double-Sided
141	243

M H W B A W R
Bag Drop

The Bag Drop offers casual mobile storage of personal items and work bags below the worksurface.

WHAT'S INCLUDED
1 bag drop unit with small tray.

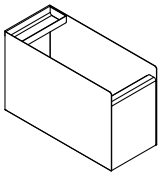

PRODUCT OPTIONS

Case Finish	Front Finish	Smooth Felt
83 Very White	**83** Very White	**R5** Pewter
52 Ebony	**52** Ebony	**R6** Lunar
	Accent	**NN** None

SAMPLE ORDER CODE

MHWBAWR 83	**83**	**R5**

PRICING

Metal Front	Accent Front
506	521

MHWBANP
Workstation Name Plate

WHAT'S INCLUDED
1 metal bracket, 1 name plate consisting of 1 metal bezel and 1 plastic chassis, 1 transparent cover sheet, 1 whiteboard, information sheet with link to template.

NOTES
Workstation Name Plate magnetically attaches onto the metal bracket. Single-sided and double-sided options are available for solid, framed fabric and smooth felt screens. Infinity screen for single-sided application only.

Workstation Name Plate can be used in two different ways:
- Whiteboard - for non-permanent use such as hot-desking or co-working applications
- Printed Template - for more permanent applications, users can print their name plate using templates provided on product website. Customizable templates are available for download at www.teknion.com/workstation-nameplate. Printed template is placed behind the transparent cover sheet for added protection.

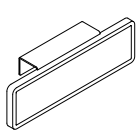

Single-Sided

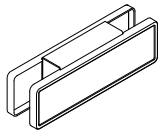

Double-Sided

PRODUCT OPTIONS

Screen Type	Application	Bracket Finish	Bezel Finish
S Solid Screen	**S** Hang-on Single-Sided	**83** Very White	**83** Very White
F Frame Fabric Screen	**D** Hang-on Double-Sided	**52** Ebony	**52** Ebony
B Beveled Screen		Accent	Accent
I Infinity Screen			

SAMPLE ORDER CODE

MHWBANP S	S	83	83

DIMENSIONS CODE

PRICING

	Metal	Accent
Single-Sided (S)	67	69
Double-Sided (D)	133	138

M H W B F T C
hiSpace Spine Tray End Cover

The hiSpace Spine Tray End Cover caps the exposed spine tray end of the start and finish of the bench run.

WHAT'S INCLUDED
1 Spine tray end cover.

NOTES
Not required when an end cable riser, end gable, or end of run screen is present.

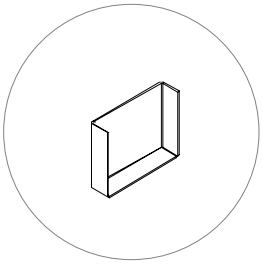

PRODUCT OPTIONS

Finish
83 Very White
52 Ebony

SAMPLE ORDER CODE

MHWBFTC 83

PRICING

42

MHWBCLZ
hiSpace Smooth Felt Lateral Screen

The hiSpace Smooth Felt Lateral Screen creates casual space division between neighboring workstations.

WHAT'S INCLUDED
Lateral smooth felt screen, mounting bracket, mounting hardware.

NOTES
Screens must be specified as left/right as based on the user's orientation.

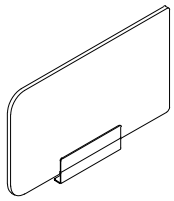

PRODUCT OPTIONS

Height	Depth	Screen Fit	Corner Profile	Left/Right	Smooth Felt Finish	Bracket Finish
11	07, 08	**F** Full	**R** Radius	**L** Left	**R5** Pewter	**83** Very White
		P Partial	**S** Straight	**R** Right	**R6** Lunar	**52** Ebony Accent

SAMPLE ORDER CODE

MHWBCLZ 11	**07**	**P**	**R**	**L**	**R5**	**83**

DIMENSIONS CODE

D
07
08

PRICING

PARTIAL

Metal Frame	Accent Frame
255	270
290	303

FULL

Metal Frame	Accent Frame
283	290
290	303

hispace height-adjustable tables

product map

MYWYR hiSpace World Wide Height-Adjustable Freestanding – Base Only

Page 179

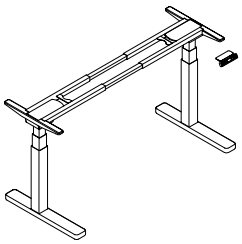

MYWWB hiSpace World Wide Rectangular Worksurface

Page 180

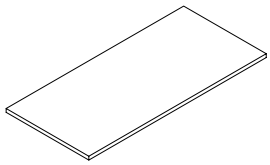

MYWWJ hiSpace World Wide Rectangular Worksurface with Radius Corners

Page 182

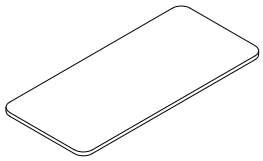

MYNS hiSpace Basic 120 Height-Adjustable Freestanding Table – Base Only

Page 184

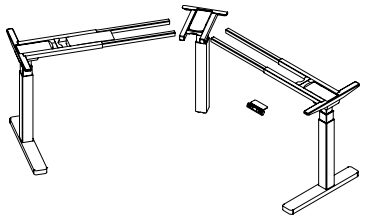

MYWBWBT hiSpace Freestanding 120 Worksurface with Square Corners

Page 186

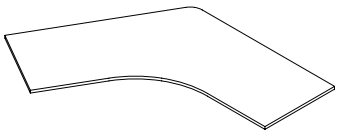

MYWBWJT hiSpace Freestanding 120 Worksurface with Radius Corners

Page 188

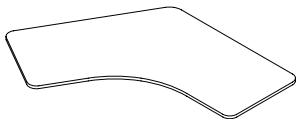

MYWUY Under Worksurface Cable Tray for Freestanding Height-Adjustable Table

Page 190

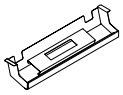

MYWEE Vertical Wire Carrier for Freestanding hiSpace World Wide

Page 191

MYWXC Infinity Curved Desk Edge Screen for Freestanding Height-Adjustable Table

Page 192

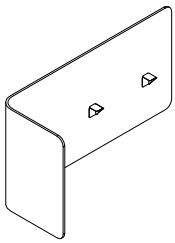

MYWXD Infinity Desk Edge Screen for Freestanding Height-Adjustable Table

Page 193

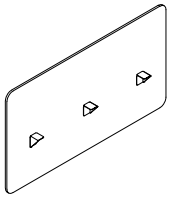

MYWFD Desk Edge Screen – Framed Fabric

Page 194

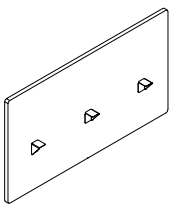

MYWMS Modesty Panel for Freestanding Height-Adjustable Table – Solid

Page 195

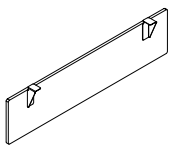

product map (continued)

MYWMF **Modesty Panel for Freestanding Height-Adjustable Table – Smooth Felt**

Page 196

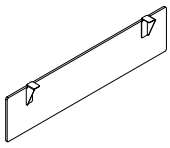

MYWYR

hiSpace World Wide Height-Adjustable Freestanding – Base Only

The hiSpace World Wide Height-Adjustable Freestanding – Base Only provides a freestanding, height-adjustable table with a refined aesthetic.

WHAT'S INCLUDED

Electric height-adjustable or fixed height base only. Worksurface not included. All installation hardware.

NOTES

Switch is not included with fixed height option.

Ships knocked down.

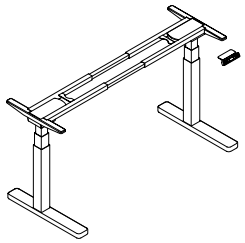

PRODUCT OPTIONS

Base Mechanism	Surface Depth	Surface Width	Base Finish	Switch	Country
2F Fixed Height	07, 08	12, 14, 15, 16, 18	**83** Very White	**N** None	**01** GB
9E Extended Electric-Extended (574mm - 1237mm)			**52** Ebony	**D** Display with Up/ Down Memory	**02** Schuko
9Y Extended Range (620mm - 1270mm)				**A** Toggle Display with Memory	**03** IND-EU
					04 Thailand
					05 USA
					06 Australia
					08 China
					09 India Three Pin
					10 Philippines
					11 Indonesia

SAMPLE ORDER CODE

MYWYR 9E	07	124	52	D	01

CODE | **PRICING**

Base	
Fixed Height (2F)	976
Extended Electric-Extended (9E)	1562
Extended Range (9Y)	1562

M Y W W B

hiSpace World Wide Rectangular Worksurface

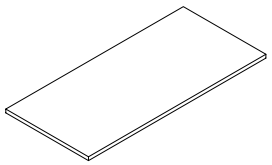

The hiSpace World Wide Rectangular Worksurface Straight Corner is to be used on hiSpace World Wide Height-Adjustable Table Base.

WHAT'S INCLUDED
1 worksurface.

NOTES
Actual width is calculated as the stated nominal width is minus 5cm and depth is minus 2.5cm.

Grommet (N) is available only if Access Door Cut-Out Size is (04) and (06) are specified.

Grommet (C) is available only if Access Door (NN) are specified.

Grommet finish is not available if Grommet (N) are specified.

Access Door finish is not available if Access door (NN) are specified.

Applicable for all the three base options:
- Fixed Height (2F)
- Extended Electric-Extended (574mm - 1237mm) (9E)
- Extended Range (620mm - 1270mm) (9Y)

PRODUCT OPTIONS

Base Mechanism	Nominal Depth	Nominal Width	Access Door Cut Out	Grommet
9E Extended Range	07, 08	12, 14, 15, 16, 18	NN, 04, 06	**N** No Grommet **C** Grommet Center **L** Grommet Left **R** Grommet Right **B** Both Right and Left

SAMPLE ORDER CODE

MYWWB 9E	**07**	**14**	**04**	**C**

PRODUCT OPTIONS CONTINUED

Surface Finish	Edge Trim Finish	Grommet Finish	Access Door Finish
Source Laminate	**6** Straight	**83** Very White	**83** Very White
Foundation Laminate	**H** Full Knife	**52** Ebony	**52** Ebony Accent

SAMPLE ORDER CODE CONTINUED

YQ	**6**	**83**	**83**

Pricing is continued on the following page.

M Y W W B

hiSpace World Wide Rectangular Worksurface (Continued)

DIMENSIONS CODE | **PRICING**

NONE (NN) CUT OUT

D	W	NO (N) GROMMET			CENTER (C), LEFT (L), RIGHT (R) GROMMET			BOTH (B) GROMMET		
		Source Laminate	Foundation Laminate		Source Laminate	Foundation Laminate		Source Laminate	Foundation Laminate	
			Straight Edge	Full Knife Edge		Straight Edge	Full Knife Edge		Straight Edge	Full Knife Edge
07	12	497	793	862	567	862	931	636	931	1001
07	14	515	821	902	584	891	972	654	960	1041
07	15	527	837	924	597	906	992	666	976	1062
07	16	538	851	945	607	921	1013	677	990	1083
07	18	557	900	1005	627	970	1073	697	1039	1143
08	12	497	791	861	567	861	930	636	931	1001
08	14	515	821	902	584	891	972	654	960	1041
08	15	538	851	938	607	921	1008	677	990	1078
08	16	565	882	976	634	952	1045	704	1022	1114
08	18	581	919	1023	650	988	1092	719	1058	1162

400 MM (04) CUT OUT

		NO (N) GROMMET			LEFT (L), RIGHT (R) GROMMET			BOTH (B) GROMMET		
		Source Laminate	Foundation Laminate		Source Laminate	Foundation Laminate		Source Laminate	Foundation Laminate	
			Straight Edge	Full Knife Edge		Straight Edge	Full Knife Edge		Straight Edge	Full Knife Edge
07	12	497	793	862	567	862	931	636	931	1001
07	14	515	821	902	584	891	972	654	960	1041
07	15	527	837	924	597	906	992	666	976	1062
07	16	538	851	945	607	921	1013	677	990	1083
07	18	557	900	1005	627	970	1073	697	1039	1143
08	12	497	791	861	567	861	930	636	931	1001
08	14	515	821	902	584	891	972	654	960	1041
08	15	538	851	938	607	921	1008	677	990	1078
08	16	565	882	976	634	952	1045	704	1022	1114
08	18	581	919	1023	650	988	1092	719	1058	1162

600 MM (06) CUT OUT

		NO (N) GROMMET			LEFT (L), RIGHT (R) GROMMET			BOTH (B) GROMMET		
		Source Laminate	Foundation Laminate		Source Laminate	Foundation Laminate		Source Laminate	Foundation Laminate	
			Straight Edge	Full Knife Edge		Straight Edge	Full Knife Edge		Straight Edge	Full Knife Edge
07	14	515	821	902	584	891	972	654	960	1041
07	15	527	837	924	597	906	992	666	976	1062
07	16	538	851	945	607	921	1013	677	990	1083
07	18	557	900	1005	627	970	1073	697	1039	1143
08	14	515	821	902	584	891	972	654	960	1041
08	15	538	851	938	607	921	1008	677	990	1078
08	16	565	882	976	634	952	1045	704	1022	1114
08	18	581	919	1023	650	988	1092	719	1058	1162

If Metal Access Door is specified for 400 mm (04), add 148
600 mm (06), add 162

If Accent Access Door is specified for 400 mm (04), add 158
600 mm (06), add 172

M Y W W J

hiSpace World Wide Rectangular Worksurface with Radius Corners

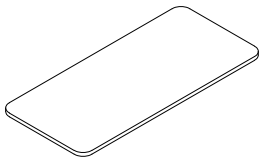

The hiSpace World Wide Rectangular Worksurface with Radius Corners is to be used on hiSpace World Wide Height-Adjustable Table Base.

WHAT'S INCLUDED
1 worksurface.

NOTES
Actual width is calculated as the stated nominal width is minus 5cm and depth is minus 2.5cm.

Grommet (N) is available only if Access Door Cut-Out Size is (04) and (06) are specified.

Grommet (C) is available only if Access Door (NN) are specified.

Grommet finish is not available if Grommet (N) are specified.

Access Door finish is not available if Access door (NN) are specified.

Applicable for all the three base options:
- Fixed Height (2F)
- Extended Electric-Extended (574mm - 1237mm) (9E)
- Extended Range (620mm - 1270mm) (9Y)

PRODUCT OPTIONS

Base Mechanism	Nominal Depth	Nominal Width	Access Door Cut Out	Grommet
9E Extended Range	07, 08	12, 14, 15, 16, 18	NN, 04, 06	**N** No Grommet **C** Grommet Center **L** Grommet Left **R** Grommet Right **B** Both Right and Left

SAMPLE ORDER CODE

MYWWJ 9E	**07**	**14**	**04**	**C**

PRODUCT OPTIONS CONTINUED

Surface Finish	Edge Trim Finish	Edge Bend Finish	Grommet Finish	Access Door Finish
Source Laminate	**6** Straight	**1** Matching Trim	**83** Very White	**83** Very White
Foundation Laminate	**H** Full Knife	**2** Black Trim	**52** Ebony	**52** Ebony Accent

SAMPLE ORDER CODE CONTINUED

YQ	**6**	**1**	**83**	**83**

Pricing is continued on the following page.

M Y W W J

hiSpace World Wide Rectangular Worksurface with Radius Corners (Continued)

DIMENSIONS CODE | **PRICING**

NONE (NN) CUT OUT

D	W	NO (N) GROMMET			CENTER (C), LEFT (L), RIGHT (R) GROMMET			BOTH (B) GROMMET		
		Source Laminate	Foundation Laminate		Source Laminate	Foundation Laminate		Source Laminate	Foundation Laminate	
			Straight Edge	Full Knife Edge		Straight Edge	Full Knife Edge		Straight Edge	Full Knife Edge
07	12	497	793	862	567	862	931	636	931	1001
07	14	515	821	902	584	891	972	654	960	1041
07	15	527	837	924	597	906	992	666	976	1062
07	16	538	851	945	607	921	1013	677	990	1083
07	18	557	900	1005	627	970	1073	697	1039	1143
08	12	497	791	861	567	861	930	636	931	1001
08	14	515	821	902	584	891	972	654	960	1041
08	15	538	851	938	607	921	1008	677	990	1078
08	16	565	882	976	634	952	1045	704	1022	1114
08	18	581	919	1023	650	988	1092	719	1058	1162

400 MM (04) CUT OUT

		NO (N) GROMMET			LEFT (L), RIGHT (R) GROMMET			BOTH (B) GROMMET		
		Source Laminate	Foundation Laminate		Source Laminate	Foundation Laminate		Source Laminate	Foundation Laminate	
			Straight Edge	Full Knife Edge		Straight Edge	Full Knife Edge		Straight Edge	Full Knife Edge
07	12	497	793	862	567	862	931	636	931	1001
07	14	515	821	902	584	891	972	654	960	1041
07	15	527	837	924	597	906	992	666	976	1062
07	16	538	851	945	607	921	1013	677	990	1083
07	18	557	900	1005	627	970	1073	697	1039	1143
08	12	497	791	861	567	861	930	636	931	1001
08	14	515	821	902	584	891	972	654	960	1041
08	15	538	851	938	607	921	1008	677	990	1078
08	16	565	882	976	634	952	1045	704	1022	1114
08	18	581	919	1023	650	988	1092	719	1058	1162

600 MM (06) CUT OUT

		NO (N) GROMMET			LEFT (L), RIGHT (R) GROMMET			BOTH (B) GROMMET		
		Source Laminate	Foundation Laminate		Source Laminate	Foundation Laminate		Source Laminate	Foundation Laminate	
			Straight Edge	Full Knife Edge		Straight Edge	Full Knife Edge		Straight Edge	Full Knife Edge
07	14	515	821	902	584	891	972	654	960	1041
07	15	527	837	924	597	906	992	666	976	1062
07	16	538	851	945	607	921	1013	677	990	1083
07	18	557	900	1005	627	970	1073	697	1039	1143
08	14	515	821	902	584	891	972	654	960	1041
08	15	538	851	938	607	921	1008	677	990	1078
08	16	565	882	976	634	952	1045	704	1022	1114
08	18	581	919	1023	650	988	1092	719	1058	1162

If Metal Access Door is specified for 400 mm (04), add 148
600 mm (06), add 162

If Accent Access Door is specified for 400 mm (04), add 158
600 mm (06), add 172

M Y N S

hiSpace 120 Height-Adjustable Freestanding Table – Base Only

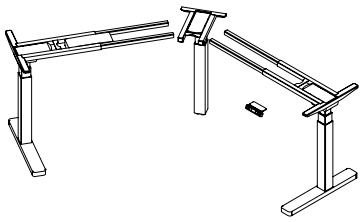

WHAT'S INCLUDED

Each 120° table base includes 1 electric height-adjustable mechanism with switch (height-adjustable only), 3 height-adjustable or fixed height legs with levelers, all assembly hardware, shipped knocked down, worksurface not included.

NOTES

Switch is not included with fixed height option.

Always uses a C-Leg Application.

Surface dimensions are actual width and actual depth.

Electric base mechanism has 0.2 Watt resting power draw and uses a 240V universal control box (height-adjustable only).

PRODUCT OPTIONS

Base Mechanism	Surface Depth	Surface Width	Base Finish	Switch	Country
2F Fixed Height	07, 08	12, 14, 15	**83** Very White	**N** None	**01** GB
9E Extended Electric-Extended (574mm - 1237mm)			**52** Ebony	**D** Display with Up/ Down Memory	**02** Schuko
9Y Extended Range (620mm - 1270mm)				**A** Toggle Display with Memory	**03** IND-EU
					04 Thailand
					05 USA
					06 Australia
					08 China
					09 India Three Pin
					10 Philippines
					11 Indonesia

SAMPLE ORDER CODE

MYNS 9E	07	15	52	D	01

CODE **PRICING**

Base	
Fixed Height (2F)	1446
Extended Electric-Extended (9E)	2670
Extended Range (9Y)	2670

M Y W B W B T

hiSpace Freestanding 120 Worksurface with Square Corners

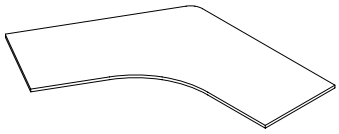

The hiSpace 120 Worksurface is to be paired with the 120 Frame (MHWBFYT) to create a Height-Adjustable 120 Bench station.

WHAT'S INCLUDED
1 worksurface, cut outs (if specified), mounting hardware.

NOTES
Access Door Cut Out Size (06) is not available when Width 12 is selected.

Access Door Cut Out Location (NN) must be selected when Access Door Size (NN) is selected.

Stop option on Access Door Finish for Access Door Size (NN).

Stop option on Grommet Finish for Grommet (N).

PRODUCT OPTIONS

Depth	Width	Access Door Size	Access Door Location	Grommet
07, 08	12, 14, 15	NN, 04, 06	**NN** None **LL** Left cut out **RR** Right cut out **BB** Both Left and Right cut out	**N** No Grommet **A** Left, Right and Center **B** Both Left and Right **L** Left **R** Right **C** Center

SAMPLE ORDER CODE

MYWBWBT 07	**14**	**04**	**LL**	**C**

PRODUCT OPTIONS CONTINUED

Surface Finish	Edge Trim Style	Edge Bend Finish	Grommet Finish	Access Door Finish
Source Laminate Foundation Laminate	**6** Straight Trim	**1** Matching Trim **2** Black Trim	**NN** None **83** Very White **52** Ebony	**NN** None **83** Very White **52** Ebony Accent

SAMPLE ORDER CODE CONTINUED

YQ	**6**	**1**	**83**	**83**

See pricing in the following page.

M Y W B W B T

hiSpace Freestanding 120 Worksurface with Square Corners (Continued)

DIMENSIONS CODE		PRICING	
D	W	Source Laminate	Foundation Laminate
07	12	1031	1493
07	14	1190	1726
07	15	1346	1965
08	12	1098	1594
08	14	1264	1833
08	15	1432	2085

If Access Door Cut Out is specified:
- Left or Right Access Door Cut-out, add 28
- Left & Right Access Door Cut-out, add 55

If Grommet Cut Out is specified:
- Left, Right or Center Grommet Cut-out, add 75
- Left & Right Grommet Cut-out, add 148
- Left, Right & Center Grommet Cut-out, add 222

If Metal Access Door is specified for 400 mm (04), add 125 each
600 mm (06), add 162 each

If Accent Access Door is specified for 400 mm (04), add 158 each
600 mm (06), add 172 each

M Y W B W J T

hiSpace Freestanding 120 Worksurface with Radius Corners

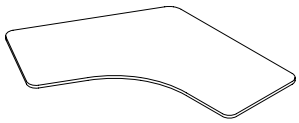

The hiSpace 120 Worksurface is to be paired with the 120 Frame (MHWBFYT) to create a Height-Adjustable 120 Bench station.

WHAT'S INCLUDED
1 worksurface, cut outs (if specified), mounting hardware.

NOTES
Access Door Cut Out Size (06) is not available when Width 12 is selected.

Access Door Cut Out Location (NN) must be selected when Access Door Size (NN) is selected.

Stop option on Access Door Finish for Access Door Size (NN).

Stop option on Grommet Finish for Grommet (N).

PRODUCT OPTIONS

Depth	Width	Access Door Size	Access Door Location	Grommet
07, 08	12, 14, 15	NN, 04, 06	**NN** None **LL** Left cut out **RR** Right cut out **BB** Both Left and Right cut out	**N** No Grommet **A** Left, Right and Center **B** Both Left and Right **L** Left **R** Right **C** Center

SAMPLE ORDER CODE

MYWBWJT 07	**14**	**04**	**LL**	**C**

PRODUCT OPTIONS CONTINUED

Surface Finish	Edge Trim Style	Edge Bend Finish	Grommet Finish	Access Door Finish
Source Laminate Foundation Laminate	**6** Straight Trim	**1** Matching Trim **2** Black Trim	**NN** None **83** Very White **52** Ebony	**NN** None **83** Very White **52** Ebony Accent

SAMPLE ORDER CODE CONTINUED

YQ	**6**	**1**	**83**	**83**

See pricing in the following page.

M Y W B W J T

hiSpace Freestanding 120 Worksurface with Radius Corners (Continued)

DIMENSIONS CODE		PRICING	
D	W	Source Laminate	Foundation Laminate
07	12	1031	1493
07	14	1190	1726
07	15	1346	1965
08	12	1098	1594
08	14	1264	1833
08	15	1432	2085

If Access Door Cut Out is specified:
- Left or Right Access Door Cut-out, add 28
- Left & Right Access Door Cut-out, add 55

If Grommet Cut Out is specified:
- Left, Right or Center Grommet Cut-out, add 75
- Left & Right Grommet Cut-out, add 148
- Left, Right & Center Grommet Cut-out, add 222

If Metal Access Door is specified for 400 mm (04), add 125 each
600 mm (06), add 162 each

If Accent Access Door is specified for 400 mm (04), add 158 each
600 mm (06), add 172 each

M Y W U Y

Under Worksurface Cable Tray for Freestanding Height-Adjustable Table

The Under Worksurface Cable Tray for Freestanding Height-Adjustable Table provides discrete wire management with a capability for run cable below the power module.

WHAT'S INCLUDED
1 cable tray and hardware.

NOTES
Tray is complete with holes which will allow for the mounting of Power Unit 4-Gang Power Bars or Hardwired.

Power Unit to be purchased separately.

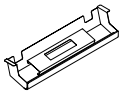

PRODUCT OPTIONS

Type	Nominal Size	Plug Mount	Finish
U Under Worksurface	04, 06	**0** None **1** Hard Wire 4-Gang **2** Powerbox M 4-Gang	**83** Very White **52** Ebony

SAMPLE ORDER CODE

MYWUY U	**04**	**1**	**83**

DIMENSIONS CODE	PRICING
W	
04	141
06	151

WHAT'S INCLUDED
1 vertical wire carrier, 1 leg cover, 1 top bracket and screws.

NOTES
Flexible portion finished in Very White or Ebony.

MYWEE
Vertical Wire Carrier for Freestanding hiSpace World Wide

PRODUCT OPTIONS

Style	Leg Cover Finish	Vertical Wire Carrier Finish
1 Standard Capacity	**83** Very White	**83** Very White
2 Double-Sided	**52** Ebony	**52** Ebony

SAMPLE ORDER CODE

MYWEE 1	**83**	**60**

PRICING

240

M Y W X C

Infinity Curved Desk Edge Screen for Freestanding Height-Adjustable Table

The Infinity Curved Desk Edge Screen for Freestanding Height-Adjustable Table attaches to the worksurface and provides casual privacy and space division.

WHAT'S INCLUDED
1 screen with mounting bracket and hardware.

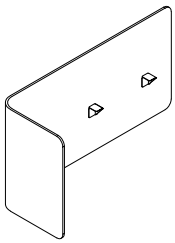

PRODUCT OPTIONS

Height	Depth	Width	Orientation	Desk Edge Screen Fabric Finish	Bracket Finish
11, 13	20	12, 14, 15, 16	**L** Left	Panel Fabrics	**83** Very White
			R Right	Upholstery Fabrics	**52** Ebony

SAMPLE ORDER CODE

MYWXC 11	**20**	**16**	**R**	**E380**	**83**

DIMENSIONS CODE

H	D	W
11	20	12
11	20	14
11	20	15
11	20	16
13	20	12
13	20	14
13	20	15
13	20	16

PRICING

Fabric A/COM	Gr. 1	Gr. 2	Gr. 3	Gr. 4	Gr. 5	Gr. 6	Gr. 7
1139	1169	1209	1169	1169	1229	1250	1491
1160	1193	1238	1193	1193	1260	1283	1552
1170	1204	1252	1204	1204	1275	1300	1583
1180	1218	1268	1218	1218	1292	1318	1616
1310	1370	1450	1370	1370	1491	1531	2012
1351	1417	1506	1417	1417	1552	1597	2135
1370	1441	1535	1441	1441	1583	1631	2198
1392	1467	1567	1467	1467	1616	1666	2264

The Infinity Desk Edge Screen for Freestanding Height-Adjustable Table attaches to the worksurface and provides casual privacy and space division.

WHAT'S INCLUDED
1 screen with mounting bracket and hardware.

MYWXD
Infinity Desk Edge Screen for Freestanding Height-Adjustable Table

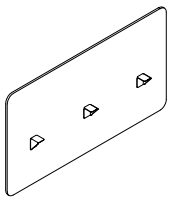

PRODUCT OPTIONS

Height	Width	Screen Finish	Bracket Finish
11, 13	12, 14, 15, 16, 18	Panel Fabrics Upholstery Fabrics	**83** Very White **52** Ebony

SAMPLE ORDER CODE

MYWXD 13	12	B203	83

DIMENSIONS CODE

H	W
11	12
11	14
11	15
11	16
11	18
13	12
13	14
13	15
13	16
13	18

PRICING

Fabric A/COM	Gr. 1	Gr. 2	Gr. 3	Gr. 4	Gr. 5	Gr. 6	Gr. 7
905	926	953	926	926	968	981	1149
916	938	969	938	938	983	999	1179
934	959	995	959	959	1011	1029	1235
945	972	1009	972	972	1028	1047	1270
965	997	1038	997	997	1059	1080	1331
1023	1066	1121	1066	1066	1149	1177	1510
1043	1089	1149	1089	1089	1179	1210	1573
1081	1132	1201	1132	1132	1235	1271	1685
1103	1159	1232	1159	1159	1270	1306	1752
1143	1205	1289	1205	1205	1331	1372	1876

M Y W F D
Desk Edge Screen – Framed Fabric

The Desk Edge Screen – Framed Fabric for freestanding height-adjustable table attaches to the worksurface and provides casual privacy and space division.

WHAT'S INCLUDED
1 screen with mounting bracket and hardware.

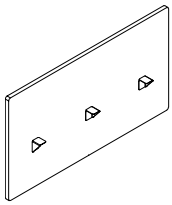

PRODUCT OPTIONS

Height	Width	Screen Finish	Bracket Finish	Frame Finish
11, 13	12, 14, 15, 16, 18	Panel Fabrics Upholstery Fabrics	**83** Very White **52** Ebony	**83** Very White **52** Ebony

SAMPLE ORDER CODE

MYWFD 13	12	B203	83	52

DIMENSIONS

CODE H	CODE W
11	12
11	14
11	15
11	16
11	18
13	12
13	14
13	15
13	16
13	18

PRICING

Fabric A/COM	Gr. 1	Gr. 2	Gr. 3	Gr. 4	Gr. 5	Gr. 6	Gr. 7
626	647	675	647	647	688	703	869
636	658	688	658	658	704	718	900
685	710	745	710	710	763	780	987
696	724	760	724	724	779	797	1020
738	769	811	769	769	833	852	1104
801	844	900	844	844	928	956	1289
823	868	928	868	868	958	988	1352
884	936	1005	936	936	1039	1073	1489
906	961	1036	961	961	1072	1110	1555
980	1042	1126	1042	1042	1168	1210	1713

MYWMS

Modesty Panel for Freestanding Height-Adjustable Table – Solid

The Modesty Panel for Freestanding Height-Adjustable Table – Solid provides seated privacy to hiSpace World Wide Tables.

WHAT'S INCLUDED
1 modesty panel with mounting hardware.

NOTES
Dimensions referenced are nominal.

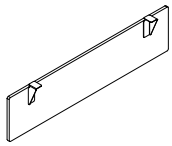

PRODUCT OPTIONS

Height	Width	Corner Profile	Finish	Modesty Finish	Edge Trim Style
04	12, 14, 15, 16, 18	**B** Straight **J** Radius	**83** Very White **52** Ebony	Source Laminate Foundation Laminate	**6** Straight Trim

SAMPLE ORDER CODE

MYWMS 04	12	B	83	YQ	6

DIMENSIONS CODE

H	W
04	12
04	14
04	15
04	16
04	18

PRICING

Source Laminate	Foundation Laminate
256	400
291	454
306	484
324	514
356	569

M Y W M F

Modesty Panel for Freestanding Height-Adjustable Table – Smooth Felt

The Modesty Panel for Freestanding Height-Adjustable Table – Smooth Felt provides seated privacy to hiSpace world wide Tables.

WHAT'S INCLUDED
1 modesty panel with mounting hardware.

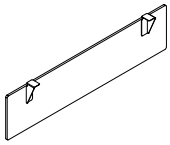

PRODUCT OPTIONS

Height	Width	Corner Profile	Finish	Felt Finish
04	12, 14, 15, 16, 18	**B** Straight **J** Radius	**83** Very White **52** Ebony	**R5** Pewter **R6** Lunar

SAMPLE ORDER CODE

MYWMF 04	**12**	**B**	**83**	**R5**

DIMENSIONS CODE

H	W
04	12
04	14
04	15
04	16
04	18

PRICING

355
355
355
646
646

world wide navigate

world wide navigate

NAVIGATE APPLICATION GUIDE 201

NAVIGATE PRICE & PRODUCT GUIDE 211

navigate
application guide

navigate application guide

NAVIGATE OVERVIEW 202

NAVIGATE HEIGHT-ADJUSTABLE TABLE BASICS 203

PLANNING WITH NAVIGATE 204

NAVIGATE TABLE EDGE TRIM STYLES 209

navigate overview

Navigate World Wide has a refined aesthetic with no visible fasteners. Tables can be easily adjusted to fit the individual and support multiple workplace styles.

- Consists of two components specified separately:
  - Worksurface
  - Bases, two styles available:
    - C-Leg
    - T-leg
- To specify:
  - Select the desire worksurface
  - Select the base to match the selected worksurface

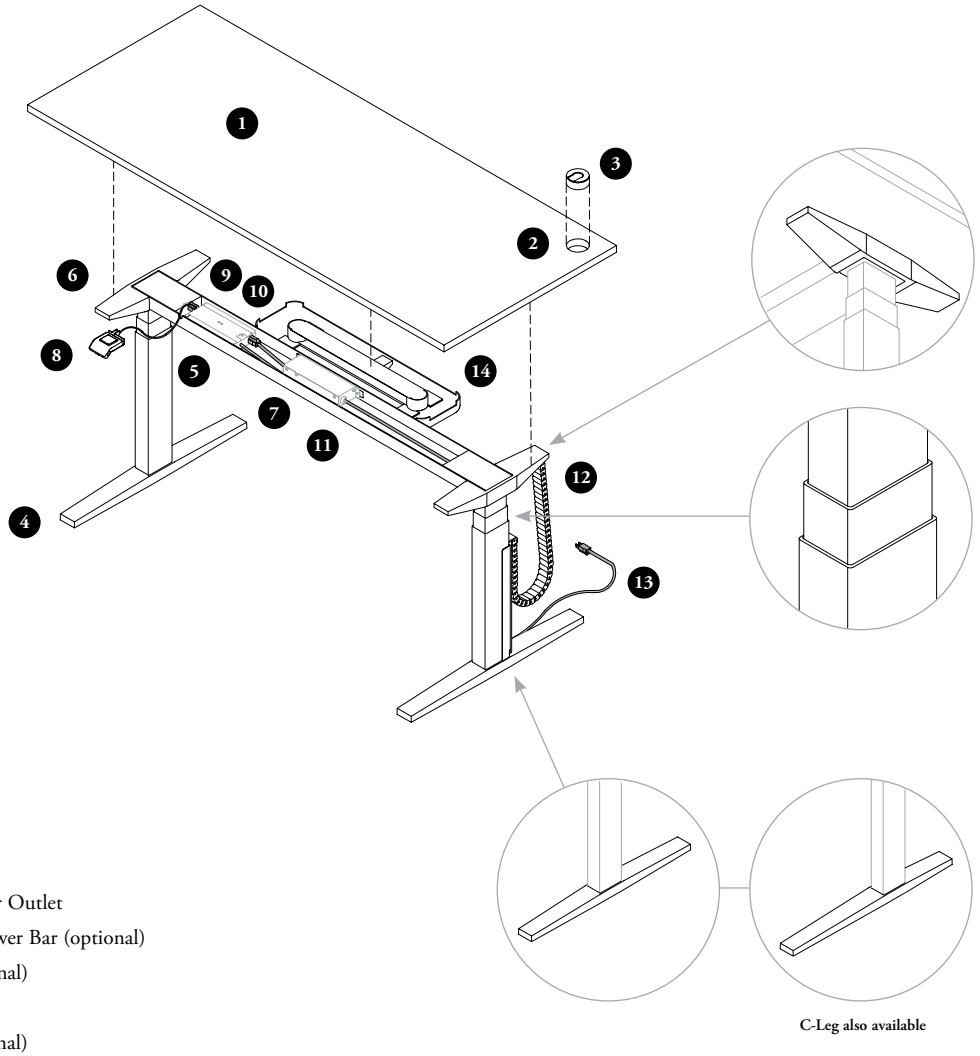

Worksurface

1. Worksurface
2. Cut Out
3. Grommet

Base:

4. Foot
5. Leg Base
6. Worksurface Strut
7. Cross Channel
8. Switch
9. Motor
10. Central Box with DC Power Outlet
11. Cross Chanel Integrated Power Bar (optional)
12. Vertical Wire Carrier (optional)
13. Power Cord
14. Felt Cover Organizer (optional)

collision detection

Collision Detection is a standard feature on all Navigate Height-Adjustable Bases and Tables. The Collision Detection system detects when the table collides with an object in the up or down direction that substantially impedes the movement of the table. Once a detection is made, the table will stop, reverse direction by 1", display an error code on the control panel, and lock out all adjustment for a minimum of three seconds. The detection works by continually comparing the overall power draw of the table when making height-adjustments; in the event of an inconsistent power draw between the table legs, the Collision Detection's features activate.

navigate height-adjustable table basics

Navigate World Wide Freestanding Height-Adjustable Desking is experience driven, integrates responsive innovation and creates everyday impact.

- Select the desired worksurface
- Select the base to match the specified worksurface size

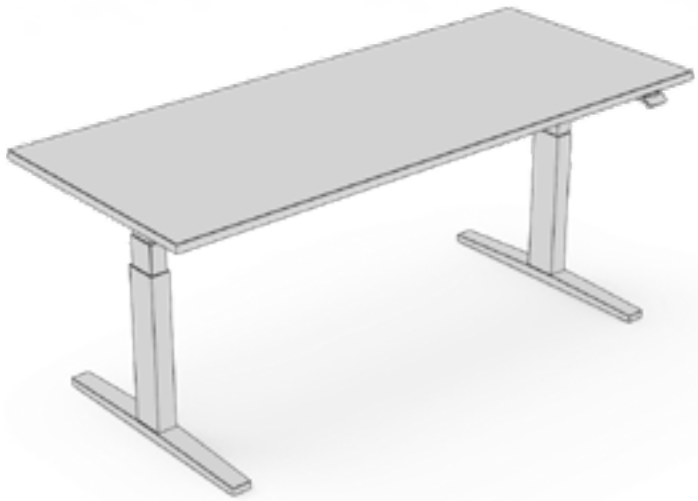

Navigate Table Finishes:

Worksurface finishes:
- Source Laminate
- Foundation Laminate
- Flintwood
- Natural Veneer

Base Finishes:
- Very White
- Platinum
- Ebony

Switch Finishes:
- Ebony
- Anthracite
- Platinum
- Crisp Grey

Grommet Finishes:
- Very White
- Platinum
- Ebony

Vertical Wire Carrier Finishes:
- Very White
- Ebony

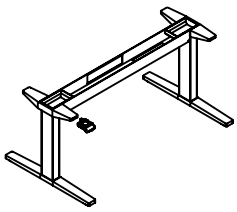

Navigate Height-Adjustable Freestanding Table Base Only (YW3)

- Table Base size is determined by the size of the worksurface it is used with
- Depths (to work with worksurface depth)
  - 06, 07, 08 dm
- Width (to work with work-surface width)
  - 12, 14, 15, 16, 18 dm
- Leg Styles:
  - C Leg
  - T Leg
- Base Mechanism
  - Extended Range Electric-Extended Height (622 mm - 1282 mm)
- Four switch options are available:
  - Electrical switches are Geo-Specific
  - Standard Up/Down
  - Display with Up/Down Memory
  - Toggle Up/Down
  - Digital Toggle with Memory and Navigate GPS
- Wire management options available:
  - None
  - Cable Organizer with Felt Cover

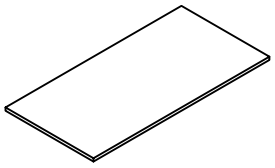

Rectangular Height-Adjustable Worksurface for Navigate (WY3)

- Dimension: All dimensions are actual sizes to allow for proper gapping between worksurfaces, panels, storage, etc.
- Depths:
  - 06, 07, 08 dm
- Widths:
  - 12, 14, 15, 16, 18 dm
- Cut Out Styles for grommets:
  - None
  - Round
  - Rectangular (Diamond Shaped Cut Out)
  - Flip Top

planning with navigate

The following should be considered when planning with Navigate Height Adjustable Tables.

height-adjustable ranges

Navigate Height-Adjustable Tables range from 622 mm - 1282 mm.

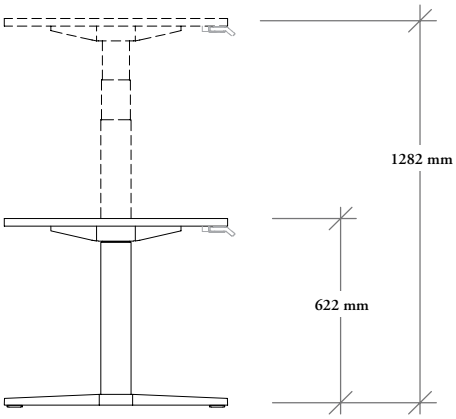

Extended Electric

frame depths

Navigate Table depths are 06, 07, 08 dm.

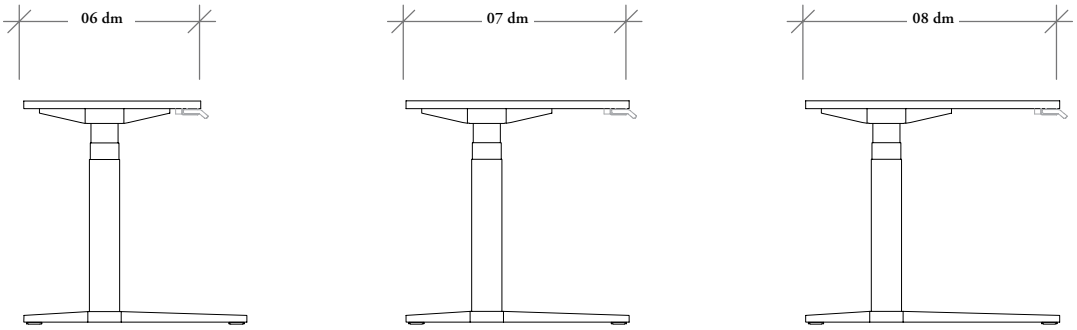

planning with navigate (continued)

The following should be considered when planning with Navigate.

leg styles

Two leg-types are available on Navigate workstation tables.

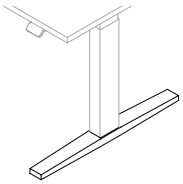

T-Leg

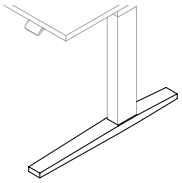

C-Leg

switches

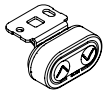

Standard Up/Down (S)

- Basic Up/Down Function

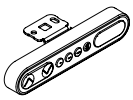

Display with Up/Down Memory (D)

- Basic Up/Down Function
- Display
- Four programmable memory settings
- Error Code Read-Out

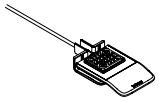

Toggle Up/Down (T)

- Basic Up/Down Function
- Soft touch material
- Contoured shape for ease of use

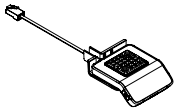

Display Toggle with Memory and Navigate GPS (X)

- Large Display
- Four Programmable Memory Setting
- Navigate GPS: Teknion's Sit/Stand Guidance and Reminders Aid
- Teknion Sit/Stand Reminders
- Soft touch material
- Can be reprogrammed using Teknion Switch Configuration software
- Error Code Read-Out with QR Code

cable management

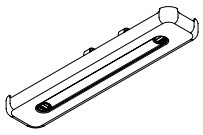

Cable Organizer with Felt Cover

- Felt provides a unique and residential solution for cable management under the worksurface
- Three velcro straps are included for wire management
- Finishes:
  - Organizer: Grey Felt
  - Mounting Brackets: Anthracite

planning with navigate (continued)

electrics and wire management

- Navigate electrics options provide the opportunity to add style to your table with the following features:
  - Four electric switches highlighted by the new Toggle Style Display Switch with Memory
  - A Geo-Specific Cross Channel Power Bar (shown below)
  - This provides pass through power to the table while maintaining the requirement of only plugging in one plug to power both the table and the power bar
  - Horizontal Cable Management options that support technology demands and table geometry
  - Vertical Wire Carrier

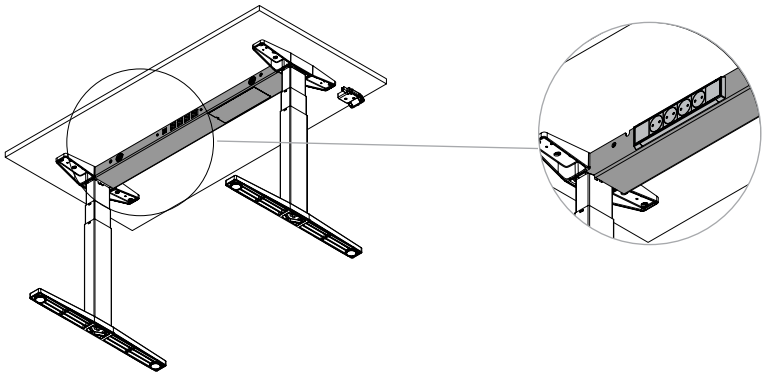

Cross Channel Integrated Power Bar

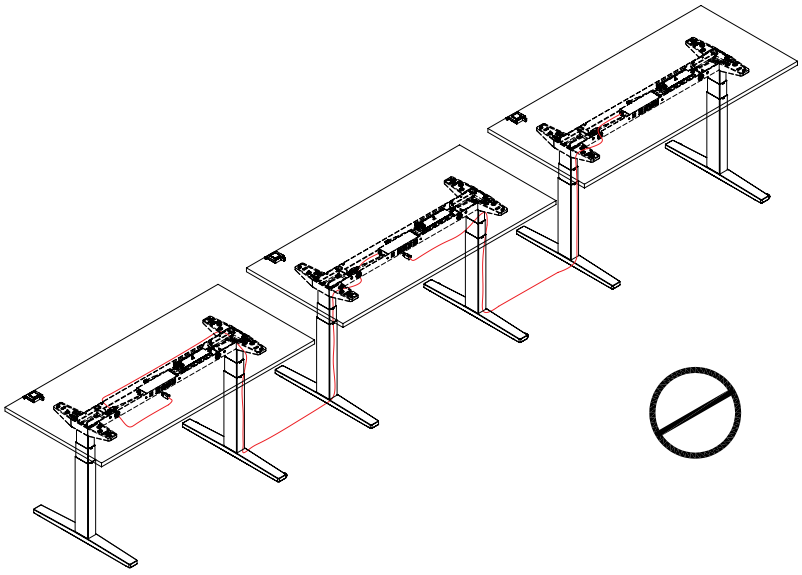

Power bars for Navigate Height-Adjustable Table cannot be daisy chained.

planning with navigate (continued)

cut outs

- Worksurfaces are available with specific cut outs and grommets Navigate cut outs provide easy and aesthetically pleasing pass-through wire management beneath a worksurface
- Cut Out Style:
  - None
  - Round
  - Rectangular (Diamond Shaped Cutout)
  - Flip Top
- Cut out Locations:
  - None
  - Left
  - Right
  - Left & Right
- Grommet Finish:
  - Very White
  - Platinum
  - Ebony

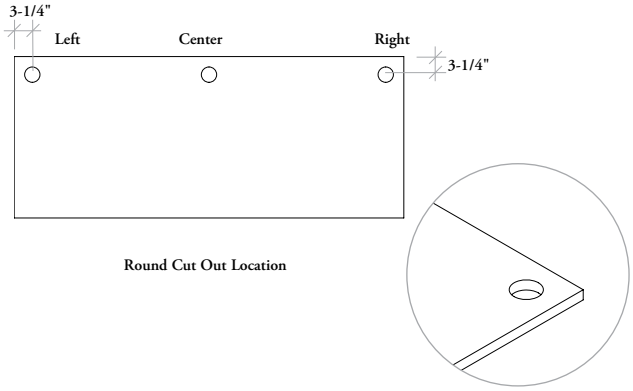

Round Cut Out Location

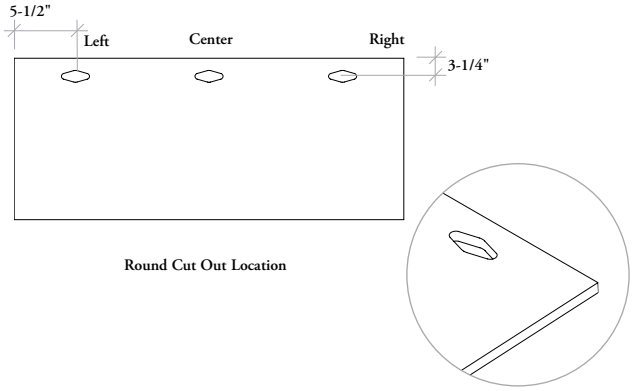

Round Cut Out Location

grommets (optional)

- Grommets (YEDG, YEEG) must be ordered separately from the *Complements: Teknion's Ergonomics & Accessories Program*
- Cut Out Cap can also be found in *Complements: Teknion's Ergonomics & Accessories Program*

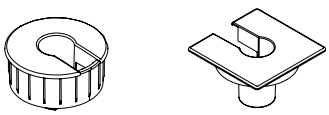

Round Square

Diecast Grommet (YEDG)
To be ordered with Round Cut Out Selection (G).

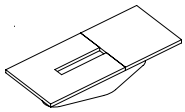

Rectangular Grommet (YEEG)
To be ordered with Rectangular Cut Out Selection (R).

planning with navigate (continued)

worksurface depths and widths

Worksurface sizes are actual dimensions.

Depths

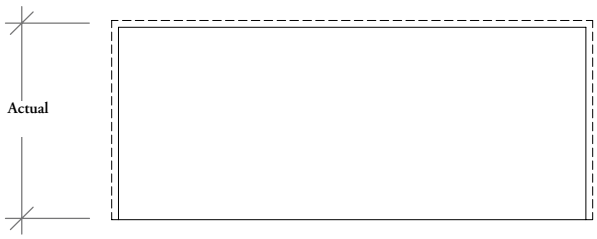

Widths

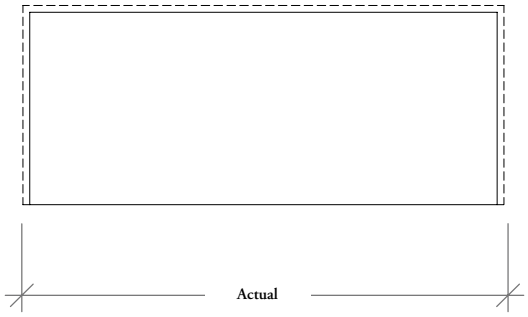

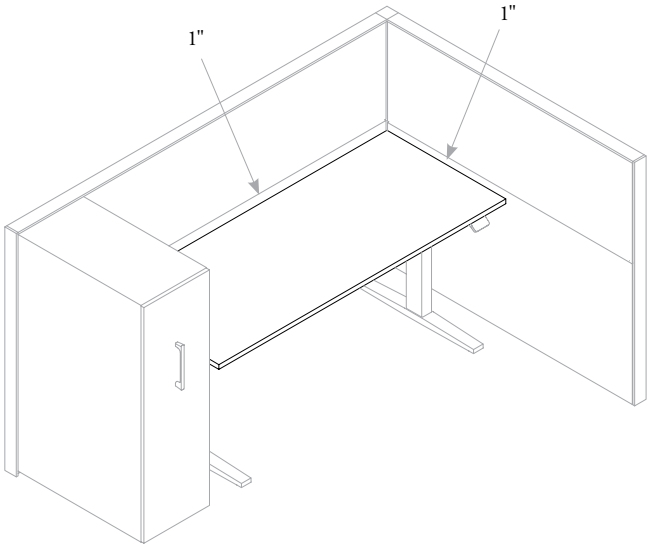

All Worksurfaces must have a clearance of 1" on all sides for a pinch gap.

navigate table edge trim styles

edge trim style

The chart below indicates which edge trim styles can be combined with height-adjustable tables surface finishes.

User Edge Trim Style

	Source Laminate Surface	Foundation Laminate Surface	Seamless Color Surface	Flintwood Surface	Natural Veneer
Straight Trim (6) 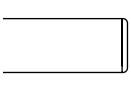 **All Edges**	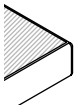	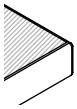	n/a	n/a	n/a
Flat Edge (8) 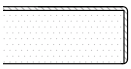 **All Edges**	n/a	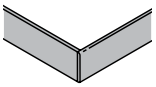	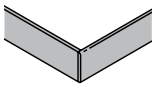	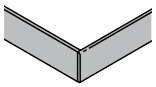	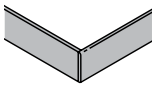
Full Knife Edge (H) 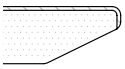 **User Edge Only**	n/a				
Bullnose Trim (2) 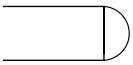 **User Edge Only**	n/a	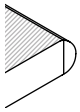	n/a	n/a	n/a
Seamless Eased Edge (E) 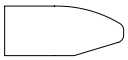 **User Edge Only**	n/a	n/a	n/a	n/a	n/a

navigate
price & product guide

product map

YW3 Navigate World Wide Height-Adjustable Freestanding Table Base Only

Page 212

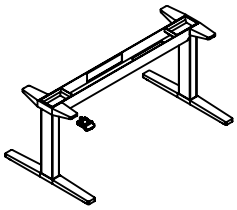

WY3 Rectangular Height-Adjustable Worksurface for Navigate World Wide

Page 214

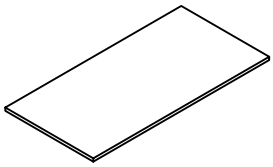

Y W 3

Navigate World Wide Height-Adjustable Freestanding Table Base Only

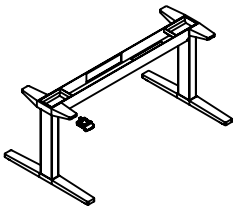

The Navigate World Wide Height-Adjustable Freestanding Table Base is for use with the Rectangular Height-Adjustable Worksurface for Navigate World Wide Only.

WHAT'S INCLUDED
Electric height-adjustable base frame only, assembly hardware, shipped knocked down. Worksurface not included.

NOTES
Leg Application (CCC) not available with depth (08).

Leg Application (TTT) not available with depth (06,07).

Under Surface Cable Management (Cable Organizer) will not work when flip up is chosen on the worksurface.

PRODUCT OPTIONS

Leg Application	Base Mechanism	Depth	Width	Foot Style	Base Finish
TTT T-Leg **CCC** C-Leg	**9W** Extended Electric-World Wide (622 mm - 1282 mm)	06, 07, 08	12, 14, 15, 16, 18	**1** Standard	**83** Very White **52** Ebony **60** Platinum

SAMPLE ORDER CODE

YW3 TTT	9W	08	16	1	52

PRODUCT OPTIONS CONTINUED

Switch Style	Switch Finish	Integrated Power Bar		Under Worksurface Cable Management	Vertical Wire Carrier Finish
S Standard Up/Down **D** Display with Up/Down Memory **T** Toggle Up/Down **X** Display Toggle with Memory and Navigate GPS	**X** Anthracite **7** Platinum **6** Crisp Grey	**0A** GB - No Power Bar **0B** Schuko - No Power Bar **0C** EU - No Power Bar **0D** Thailand - No Power Bar **0E** USA - No Power Bar **0F** Australia - No Power Bar **0G** China - No Power Bar **0H** India 3 Pin - No Power Bar	**01** GB **02** Schuko **03** IND-EU **04** Thailand **05** USA **06** Australia **08** China **09** India 3 Pin **10** Philippines **11** Indonesia	**N** None **1** Cable Organizer with Felt Cover	**V** Very White Coordinate **E** Ebony Coordinate **7** Platinum Coordinate

SAMPLE ORDER CODE CONTINUED

X	X	02	1	

Pricing is continued on the following page.

YW3

Navigate World Wide Height-Adjustable Freestanding Table Base Only (Continued)

DIMENSIONS CODE		PRICING			
D	W	Standard Up/Down (S)	Display with Up/Down Memory (D)	Toggle Up/Down (T)	Display Toggle with Memory and Navigate GPS (X)
06, 07, 08	12	3030	3187	3030	3187
06, 07, 08	14	3030	3187	3030	3187
06, 07, 08	15	3030	3187	3030	3187
06, 07, 08	16	3043	3198	3043	3198
06, 07, 08	18	3043	3198	3043	3198

For Power Bar, add 324
For Cable Organizer with Felt Cover, add 282
For Vertical Wire Carrier, add 254

W Y 3

Rectangular Height-Adjustable Worksurface for Navigate World Wide

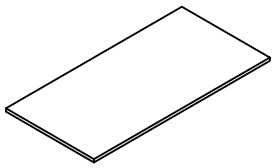

The Rectangular Height-Adjustable Worksurface for Navigate World Wide is for use with the Navigate World Wide Height-Adjustable Freestanding Table Base Only.

WHAT'S INCLUDED
1 worksurface.

NOTES
Leg Application (CCC) not available with Depth (08).

Leg Application (TTT) not available with Depth (06,07).

Cut-Out Style selection None (N) must select Cut-Out Location None (N).

Cut-Out Style selections (G), (R), (F) can not select Cut-Out Location None (N).

If Cut-Out Style selection (F) is selected, Cut-Out Location will be defaulted to (C).

PRODUCT OPTIONS

Leg Application	Base Mechanism	Depth	Width
TTT T-Leg **CCC** C-Leg	**9W** Extended Electric-World Wide (622 mm - 1282 mm)	06, 07, 08	12, 14, 15, 16, 18

SAMPLE ORDER CODE

WY3 TTT	9W	08	16

PRODUCT OPTIONS CONTINUED

Cut Out Style	Cut Out Location	Surface Finish	Edge Trim Style	Grommet Finish
N None **G** Round **R** Rectangular (Diamond Shaped Cut Out) **F** Flip Top	**N** None **C** Center **L** Left **R** Right **B** Left and Right	Source Laminate Foundation Laminate Natural Veneer Flintwood	**6** Straight Trim **H** Full Knife Edge	**83** Very White **52** Ebony **60** Platinum

SAMPLE ORDER CODE CONTINUED

F	C	LW	6	83

See pricing in the following page.

W Y 3

Rectangular Height-Adjustable Worksurface for Navigate World Wide (Continued)

DIMENSIONS CODE

PRICING

NONE (N) CUT STYLE & NO (N) CUT OUT LOCATION

D	W	SOURCE LAMINATE		FOUNDATION LAMINATE		FLINTWOOD		NATURAL VENEER	
		Straight Trim	Full Knife Edge Trim	Straight Trim	Full Knife Edge Trim	Straight Trim	Full Knife Edge Trim	Straight Trim	Full Knife Edge Trim
06	12	376	445	428	541	973	1116	1019	1170
06	14	453	522	562	716	1081	1242	1133	1302
06	15	519	589	572	730	1150	1316	1204	1381
06	16	572	642	730	1150	1316	1204	1381	1486
06	18	538	607	592	757	1308	1492	1370	1563
07	12	437	507	467	589	1111	1279	1164	1339
07	14	468	538	578	738	1207	1389	1264	1455
07	15	552	622	591	754	1284	1472	1345	1544
07	16	562	630	601	769	1361	1556	1425	1631
07	18	572	642	614	784	1477	1692	1547	1774
08	12	475	545	506	627	1227	1394	1280	1454
08	14	507	576	617	777	1323	1504	1381	1572
08	15	591	659	628	791	1400	1587	1462	1659
08	16	599	669	638	808	1476	1672	1542	1746
08	18	609	679	652	821	1594	1807	1663	1889

ROUND (G) / RECTANGULAR (R) CUT STYLE & CENTER (C) / LEFT (L) / RIGHT (R) CUT OUT LOCATION

D	W	SOURCE LAMINATE		FOUNDATION LAMINATE		FLINTWOOD		NATURAL VENEER	
		Straight Trim	Full Knife Edge Trim	Straight Trim	Full Knife Edge Trim	Straight Trim	Full Knife Edge Trim	Straight Trim	Full Knife Edge Trim
06	12	413	483	465	577	1009	1152	1057	1205
06	14	490	559	598	754	1117	1279	1170	1338
06	15	556	626	607	767	1187	1354	1242	1417
06	16	607	677	767	1187	1354	1242	1417	1523
06	18	575	645	627	794	1344	1528	1406	1601
07	12	473	543	505	625	1148	1314	1201	1376
07	14	506	575	616	775	1244	1424	1302	1492
07	15	589	658	626	790	1322	1508	1382	1580
07	16	598	668	637	806	1397	1594	1463	1667
07	18	607	677	649	820	1514	1728	1583	1812
08	12	512	581	543	663	1263	1431	1316	1492
08	14	544	614	654	814	1360	1541	1417	1607
08	15	627	697	664	828	1437	1625	1497	1695
08	16	636	706	676	844	1514	1709	1578	1783
08	18	646	715	687	859	1629	1845	1698	1927

Pricing is continued on the following page.

W Y 3

Rectangular Height-Adjustable Worksurface for Navigate World Wide (Continued)

DIMENSIONS

CODE **PRICING**

ROUND (G) / RECTANGULAR (R) CUT STYLE & LEFT&RIGHT (B) CUT OUT LOCATION

		SOURCE LAMINATE		FOUNDATION LAMINATE		FLINTWOOD		NATURAL VENEER	
D	W	Straight Trim	Full Knife Edge Trim	Straight Trim	Full Knife Edge Trim	Straight Trim	Full Knife Edge Trim	Straight Trim	Full Knife Edge Trim
06	12	448	518	502	615	1046	1190	1092	1243
06	14	526	596	635	790	1153	1314	1205	1374
06	15	594	663	645	803	1223	1391	1279	1454
06	16	645	714	803	1223	1391	1279	1454	1558
06	18	612	682	664	829	1381	1566	1443	1637
07	12	511	579	541	662	1183	1352	1238	1413
07	14	542	611	652	813	1281	1462	1338	1528
07	15	625	695	663	826	1358	1546	1419	1616
07	16	635	705	674	842	1435	1629	1500	1705
07	18	645	714	686	857	1551	1766	1621	1847
08	12	548	618	578	700	1300	1467	1354	1528
08	14	579	649	689	850	1396	1577	1453	1644
08	15	663	733	702	865	1473	1662	1534	1733
08	16	674	743	712	880	1551	1745	1615	1820
08	18	683	753	725	896	1666	1881	1736	1962

FLIP TOP (F) CUT STYLE & CENTER (C) CUT OUT LOCATION

		SOURCE LAMINATE		FOUNDATION LAMINATE		FLINTWOOD		NATURAL VENEER	
D	W	Straight Trim	Full Knife Edge Trim	Straight Trim	Full Knife Edge Trim	Straight Trim	Full Knife Edge Trim	Straight Trim	Full Knife Edge Trim
06	12	549	619	602	714	1147	1289	1193	1343
06	14	626	696	630	890	1254	1415	1306	1475
06	15	693	763	745	904	1324	1491	1379	1554
06	16	745	815	904	1324	1491	1379	1554	1657
06	18	712	781	765	930	1481	1665	1544	1737
07	12	611	680	642	763	1284	1452	1338	1513
07	14	643	712	753	911	1381	1562	1439	1629
07	15	726	795	764	927	1459	1645	1520	1717
07	16	735	805	774	944	1534	1730	1600	1804
07	18	745	815	787	957	1652	1866	1721	1948
08	12	649	718	679	800	1400	1568	1453	1628
08	14	680	750	790	950	1496	1678	1554	1745
08	15	764	834	801	965	1574	1762	1635	1833
08	16	773	842	813	981	1651	1846	1715	1920
08	18	784	852	825	996	1767	1981	1836	2063

teknion

www.teknion.com

CAN/US/INT 02-27
©Teknion 2023

®, ™ trade marks of Teknion Corporation and/or its subsidiaries or licensed to it. Patents may be pending.

Some products may not be available in all markets. Contact your local Teknion Representative for availability.

FEB23-WWC